Lehigh Hanson
HEIDELBERGCEMENT Group

Lehigh Southwest Cement Company
24001 Stevens Creek Blvd.
Cupertino, CA 95014

October 1, 2019

Mr. Rob Salisbury
Department of Planning and Development
Land Development and Engineering
70 W. Hedding Street
San Jose, CA 95110

RE: Lehigh Southwest Cement Company—Permanente Quarry
Reclamation Plan, Conditions of Approval
Annual Compliance Report, 2018 - 2019

Dear Mr. Salisbury:

Enclosed please find the above-referenced annual report for Lehigh Quarry operations.

Please do not hesitate to contact me at 408-996-4233 if you have questions or comments.

Sincerely,

Tressa Jackson
Area Environmental Manager

Lehigh Permanente Quarry Reclamation Plan Amendment Conditions of Approval Compliance

2018-2019 Annual Report Information Package

SANTA CLARA COUNTY, CALIFORNIA

Prepared By:

Lehigh Southwest Cement Co.

24001 Stevens Creek Blvd.
Cupertino CA, 95014-5659

Contact:
Tressa Jackson
Tressa.Jackson@LehighHanson.com

Date: October 1, 2019

TABLE OF CONTENTS

ANNUAL REPORT COA STATUS REPORTING TABLE

APPENDIX A - 2018-2019 COMPLIANCE ACTIONS AND BMP STATUS REPORT

APPENDIX B - 2018-2019 EROSION CONTROL INSPECTION REPORTS

APPENDIX C - RECLAMATION PLAN AMENDMENT AND FINAL CONDITIONS OF APPROVAL ANNUAL WORKER TRAINING

APPENDIX D - WATER QUALITY MONITORING MEMO

APPENDIX E - STORMWATER POLLUTION PREVENTION PLAN

APPENDIX F - ANNUAL GREENHOUSE GAS INVENTORY REPORT

APPENDIX G - MAPS OF PAST 24 MONTHS SURFACE MINING AND RECLAMATION ACTIVITY AND FUTURE 24 MONTHS ESTIMATED ACTIVITY

APPENDIX H - IMPROVED RECLAMATION PLAN BOUNDARY DEMARCATION MEMO

APPENDIX I – FINANCIAL ASSURANCE COST ESTIMATE

APPENDIX J – AMENDED NPDES PERMIT

All COAs								
COA	**Requirement**	**Summarized Description**	**Annual Report Requirement (Yes/No)**	**Frequency**	**Required Submittal Date**	**Date Submitted**	**Comments**	**Appendix**
1	The conditions supersede all previous COAs	The following conditions of approval (COAs) shall supersede and replace all previous COAs from the 1985 Reclamation Plan approval.	No	Maintain	NA	NA	Noted.	
2	All activity must be consistent with the following COAs	All development, operations, and reclamation that occur under this RPA shall be consistent with the approved plans, unless modified by these conditions.	No	Maintain	NA	NA	Noted.	
3	RPA Re-Submittal. Final conformed documents to SCC	Within 60 days of approval of the RPA, Mine Operator shall submit six (6) copies plus one electronic copy of a "Final" RPA, incorporating changes required per the conditions of approval for the RPA, Mitigation Monitoring and Reporting Program, and Final Environmental Impact Report.	No	One Occurrence	8/24/2012	8/24/2012	Documents were submitted on or before the required submittal date.	
4	Legal Descriptions to be submitted for all parcels subject to the RPA	Within 60 days following approval of the RPA, the Mine Operator shall submit to the Planning Manager or the Manager's designee (hereinafter referred to as Planning Manager), legal descriptions for all affected parcels of real property.	No	One Occurrence	8/24/2012	8/24/2012	Documents were submitted on or before the required submittal date.	
5	RPA Expiration Date	If reclamation is not complete on or before June 30, 2032, the Mine Operator shall file an application for an amendment to the reclamation plan prior to that date.	No	One Occurrence	NA	NA	Noted.	
6	Hillside open space will be the end use	The proposed end use following reclamation is hillside open space.	No	One Occurrence	NA	NA	Noted.	
7	Payment for all reasonable costs.	The Mine Operator shall be responsible for paying all reasonable costs associated with work by, or for, the Department of Planning and Development, in conjunction with, or in any way related to the conditions of approval identified in this RPA, the mitigations contained in the Mitigation Monitoring and Reporting Program, and the annual SMARA inspections and annual review of financial assurance cost estimates.	No	Maintain	NA	NA	Noted.	
8	Annual report	Mine Operator shall provide by October 1 of each year, the information requested by the Planning Manager that is needed for the preparation of the Annual Report. (See COA Text)	Yes	Annual	10/1/2019	10/1/2019	This document, and attached appendices, represents the Mine Operator's fulfillment of its 2018-2019 report year COA 8 obligation.	
9	Planning manager ensures compliance	If at any time the Planning Manager determines that the Quarry is not in compliance with the RPA, Mitigation Monitoring and Reporting Program, or any condition of approval and as such is in violation of the RPA, the Director may take any and all actions necessary to ensure compliance with the Plan in accordance with applicable laws and regulations.	No	Ongoing	NA	NA	Noted.	
10	Copies of RPA, MMRP, and Conditions of Approval Maintained on Site	Copies of the RPA Mitigation Monitoring and Reporting Program, approved plans, conditions of approval shall be maintained at the premises of the Permanente Quarry, 24001 Stevens Creek Boulevard, at all times: one copy of all the documents shall be stored in the administration building at this location and one copy of all the documents shall be stored in the mine operations office.	No	Maintain	NA	NA	Copies of the RPA Mitigation Monitoring and Reporting Program, approved plans, conditions of approval are maintained in a binder in the quarry office with quarry management staff.	

All COAs								
COA	**Requirement**	**Summarized Description**	**Annual Report Requirement (Yes/No)**	**Frequency**	**Required Submittal Date**	**Date Submitted**	**Comments**	**Appendix**
11	Issue report summary of employee training performed	By October 1 of each year, starting in 2012, the Mine Operator shall provide to the Planning Manager a report summarizing the date of the annual training, topics reviewed, and list of all employees attending the training. The Mine Operator shall annually train all mining staff, including outside vendors, contractors, or consultants who are responsible for implementation of any part of the mine operations or reclamation at Permanente Quarry, on the requirements and provisions of the RPA, the conditions of approval, and the MMRP	Yes	Annual	10/1/2018	10/1/2019	Training for workers and subcontractors has been completed.	Appendix C: Reclamation Plan Amendment and Final Conditions of Approval Annual Worker Training
12	SWPPP to County	Within 60 days following approval of the RPA, the Mine Operator shall submit to the Planning Manager a copy of its Storm Water Pollution Prevention Plan (SWPPP) of the approved RPA, which is hereby appended to the RPA by reference. The Mine Operator is responsible for providing the Department of Planning and Development with any and all updates to the SWPPP	No	Update	8/24/12 and as needed.	10/1/2019	The SWPPP was updated on October 15, 2018. A copy of the updated SWPPP was provided as an appendix to the 2018-2019 annual report as Appendix E.	Appendix E: Updated Stormwater Pollution Prevention Plan
13	Mitigation measures adopted as COAs	All mitigation measures contained within the Mitigation Monitoring and Reporting Program (MMRP) prepared for the project are adopted as conditions of approval.	No	Maintain	NA	NA	Noted.	
14	Update FACE	By August 1st of each year, or as required by the Santa Clara County SMARA Inspection Program, the Mine Operator shall submit annually Financial Assurance Cost Estimates (FACE) to the Planning Manager for review and approval, which shall serve as the basis for the amount of financial assurances required of the Mine Operator, account for disturbed and those lands to be disturbed in the following year by the surface mining operations, inflation, and reclamation of lands accomplished in accordance with the approved RPA.	Yes	Annual	9/4/2019	9/4/2019	Financial Assurance Cost Estimates have been submitted to the Planning Manager for review on September 4, 2019. See Appendix I for proof of transmittal.	Appendix I: Financial Assurance Cost Estimate Transmittal
15	Submit copies of any violations, abatement notices, or any agency permit mod to SCC	Copies of all violations or abatement notices, requests for reports or information related to this RPA and its authorized uses by federal, state, or local jurisdictions/agencies, or subsequent modification of another agency's permit or submission of an application for any permit to another agency shall be provided to the Planning Manager within 10 business days of the County's request.	Yes	At County Request	NA	NA	No requests for copies of violations, abatement notices or agency permit modifications were received by Lehigh. No actions were needed to fulfill this COA.	
16	An invalidation of one condition does not invalidate the remaining conditions.	If any of the RPA conditions of approval, or RPA approval, are held to be invalid that holding shall not invalidate any of the remaining conditions or limitations set forth.	No	Ongoing	NA	NA	Noted.	
17	If any conditions are invalidated, the Planning Commission can replace the invalidated condition with a feasible alternative.	If any condition(s) of approval is invalidated by a court of law, and said invalidations would change the findings and/ or mitigation measures associated with the approval of this RPA, the amendment may be reviewed, at the discretion of the Planning Commission, and substitute feasible condition(s)/ mitigation measures.	No	Ongoing	NA	NA	Noted.	

All COAs								
COA	**Requirement**	**Summarized Description**	**Annual Report Requirement (Yes/No)**	**Frequency**	**Required Submittal Date**	**Date Submitted**	**Comments**	**Appendix**
18	The Mine Operator will carry the cost of any action brought against the County.	As a condition of RPA approval, the Mine Operator agrees to defend, at the Mine Operator's sole expense, any action brought against the County by a third party, and indemnify the County against settlements and judgments arising from any such action.	No	Ongoing	NA	NA	Noted.	
19	The Mine Operator will reimburse the County for any legal costs incurred in its defense.	Upon demand from the County, the Mine Operator shall reimburse the County for any court costs and or attorney's fees which the County may be required by a court to pay as a result of any such action the Mine Operator defended or which it had control of the defense.	No	Ongoing	NA	NA	Noted.	
20	The Mine Operator holds harmless the County and its employees from any legal action taken to challenge the EIR or RPA.	The Mine Operator agrees to defend, indemnify and hold harmless the County, its agents, officers and employees, from any claim, action or proceeding against the County, to challenge any portions of the EIR certification, reclamation plan process or approval.	No	Ongoing	NA	NA	Noted.	
21	Approval of the RPA does not relieve or limit the Mine Operator's previous legal liabilities.	Neither the approval of the RPA or compliance with conditions of approval shall relieve the Mine Operator from any responsibility otherwise imposed by law for damage to persons or property, nor shall the issuance of any RPA or related permit serve to impose any liability upon the County of Santa Clara, its officers, employees or agents for injury or damage to persons or property.	No	Ongoing	NA	NA	Noted.	
22	Maintain demarcation of EMSA, Rock Plant, and WMSA RPA Boundaries	Within 60 days of RPA approval, the RPA limit of disturbed area surrounding the northern and eastern edges of the EMSA, the northern and western edges of the WMSA, and the perimeter of the Rock Plant area shall be clearly demarcated in the field and shall remain in place until final reclamation has been completed. On an annual basis, demarcation shall be modified to encompass the RPA boundaries nearest the areas subject to surface mining and reclamation, as shown on aerials submitted per Condition #23. Demarcated areas shall be located and marked in the field by a licensed land surveyor or registered civil engineer authorized to practice land surveying. Demarcation shall use orange construction fencing or other brightly colored material acceptable to the Planning Manager.	Yes	Annual	8/24/2012, and annually with updates	Need	The RPA limits have not changed and the demarcations of these boundaries have been maintained. See Appendix H: Improved Reclamation Plan Boundary Demarcation Memo	Appendix H: Improved Reclamation Plan Boundary Demarcation Memo

All COAs								
COA	**Requirement**	**Summarized Description**	**Annual Report Requirement (Yes/No)**	**Frequency**	**Required Submittal Date**	**Date Submitted**	**Comments**	**Appendix**
23	GPS and Aerial Data prepared by Licensed Surveyor to SCC for Review and Approval.	At the same time as the proposed Annual Report each year, the operator shall submit to the Planning Manager a surveyed coordinate list file obtained by Global Positioning System (GPS), prepared by a licensed land surveyor or registered civil engineer authorized to practice land surveying, to be reviewed and approved by the County Surveyor, identifying the limits of reclamation, with aerial photographs of the RPA area, annotated to illustrate (a) where surface mining and reclamation activity occurred within the prior 24 months and (b) areas where mining and reclamation activities will occur in the next 24 months. Existing topographic data shall be included with the aerial photographs, and the operator shall provide projected topographic data to demonstrate how the topography will look two years later. The aerial photographs must be flown and taken biennially between June 1 and June 30 starting with June 2013. If requested by the Planning Manager or Planning Commission the materials shall be in a readable scale.	Yes	Annual	10/1/2012, and annually with updates	10/1/2019	The surveyed coordinate list file identifying the limits of reclamation has not changed since the 2012/2013 annual report. See Appendix G for mining activity occurring in the past 24 months and planned for the next 24 months. Aerial flight occurred in June 2019.	Appendix G: Maps of Past 24 Months Surface Mining and Reclamation Activity, Future 24 Months Estimated Activity and Aerial Photography.
24	Reclamation of Finished Slopes and Benches	Reclamation of finished slopes and benches shall commence at the earliest feasible date once the slopes and benches are established, as set forth in the RPA.	Yes	During Final Reclamation	NA	NA	No slopes or benches were finished during the time period covered by this report. No reclamations activities were required.	
25	Specification for Permanent Rock Fills	Rockfills, where used, should be spread in lifts not exceeding five-feet in thickness by tracked equipment, and compacted by track-walking or wheel-rolling using heavy dozers (Caterpillar D-9 or larger) and/or fully loaded rubber-tired hauling equipment, respectively. A minimum of three passes should be performed for each lift.	Yes	During Final Reclamation	NA	NA	No rockfills were required during time period covered by this report.	
26	Submit Site Plan showing Topsoil and Amendment Storage Areas	Within 60 days of RPA approval, Mine Operator shall submit a site plan identifying area(s) where topsoil, dirt, soil amendments shall be retained and used in the reclamation and re-vegetation process. Soil stored for reclamation purposes shall be clearly identified and marked in the field.	No	One Occurrence	10/1/2013	NA	Topsoil Stockpiles are stored in accordance to the COA requirements.	
27	Stockpiles of topsoil or overburden protected from wind and erosion	The Mine Operator shall safeguard stockpiles of topsoil or overburden to be used for reclamation from wind and erosion by using controls including, but not limited to, hydroseeding, erosion control mats, and coir wattles (aka “straw wattles”).	No	Maintain	NA	NA	All stockpiles of topsoil or overburden to be used for reclamation have been treated.	Appendix B: 2018-2019 Stormwater and Erosion Controls Report
28	Test Plot annual report	Reporting of the test plots for the re-vegetation criteria identified in the RPA shall be submitted to the County as part of the Mine Operator’s annual report.	Yes	Annually to 2014	10/1/2014	10/1/2014	The final, re-vegetation test plot monitoring report was provided as an appendix to the 2013-2014 Annual Report.	
	Topsoil shall use amendments	The Mine Operator shall use soil amendments, in accordance with the RPA, to improve the effectiveness of the soils used for re-vegetation of final slopes. Re-vegetation shall satisfy the criteria identified in the RPA. (See COA Text)	Yes	During Final Reclamation	NA	NA	Final reclamation did not begin during the time period covered by this report. Data regarding soil effectiveness is not required at this time. Any reclamation requiring revegetation have considered the test-plot results for vegetative palette.	

All COAs								
COA	**Requirement**	**Summarized Description**	**Annual Report Requirement (Yes/No)**	**Frequency**	**Required Submittal Date**	**Date Submitted**	**Comments**	**Appendix**
29	Revegetation success criteria	Re-vegetation of all reclaimed slopes within the RPA Boundary shall meet the minimum success criteria listed in the approved RPA before any completed phase of reclamation may be deemed reclaimed by the County and Office of Mine Reclamation (OMR).	Yes	During Final Reclamation	NA	NA	Final reclamation did not begin during the reporting period.	
30	Change to Revegetation plan	The Planning Manager shall have authority to administratively review and approve minor revisions to the re-vegetation palette contained in the approved RPA.	Yes	During Final Reclamation	NA	NA	Any reclamation requiring revegetation have considered the test-plot results for vegetative palette.	
31	Removal of Equipment	Equipment, structures, nonessential roads, as identified in the RPA, shall be removed from the project area prior to that area being deemed reclaimed by the County and OMR	Yes	During Final Reclamation	NA	NA	Final reclamation did not begin during the time period covered by this report. No equipment, structures, or roads are yet required to be removed.	
32	Overburden requirements	Construction or demolition waste or any other foreign materials are prohibited from being stored in overburden or used in reclamation. Overburden shall be compacted, tested, and documented to demonstrate it will support post-mining uses. Regarding compaction, testing, and documentation of the overburden, documentation shall be submitted to the Planning Manager within 30 days of completion.	Yes	During Final Reclamation	NA	NA	No overburden placement has been completed to require compaction testing during this report period.	
33	Basin Clean out Reports showing quantities removed and disposition	Stilling basins shall be maintained in good conditions and cleaned of silt and debris as necessary. A report shall be submitted to the Planning Manager as part of the Annual Report, fully depicting total quantities of silt removed from the basins (reported in cubic yards or tons) and where such silt is placed on the site or off the site.	Yes	Annual	NA	Need	Sedimentation basins are routinely inspected and cleaned of vegetation and sediment when necessary to maintain good condition and proper function.	Appendix A: 2018-2019 BMP Status Report
34	Provide all amended or newly issued permits from RWQCB and comply with such permits	The Mine Operator shall comply with the conditions of permits and plans required by and issued from the Regional Water Quality Control Board (RWQCB), including but not limited to approval of the Permanente Creek Restoration Plan and water discharge permits. The Mine Operator shall provide copies of all permits to the Planning Manager within 10 business days of issuance by RWQCB.	No	Ongoing	As Needed	10/1/2019	A new NPDES permit was issued on July 17, 2019. A copy of the permit is provided as an appendix to the 2018-2019 Annual Report.	Appendix J: Amended NPDES Permit
35	Criteria for Final reclamation completion	Reclamation shall be deemed complete by the County and State Office of Mine Reclamation (OMR) once reclamation has been performed to the terms of the approved RPA, and required monitoring and inspections have demonstrated compliance with the reclamation performance standards and mitigation measures as prescribed in the Mitigation, Monitoring and Reporting Program, including compliance with all pertinent permits or other requirements for reclamation issued by non-Santa Clara County public agencies, including but not limited to the RWQCB and the State Department of Fish and Game.	No	Final Reclamation	NA	NA	For Final Reclamation Completion.	
36	Provide all amended or newly issued permits from BAAQMD and comply with such permits	The Mine Operator shall comply with the conditions of permits required by and issued from the Bay Area Air Quality Management District (BAAQMD). Upon request by the County, the Mine Operator shall provide copies of all permits, and amendments to the Planning Manager within 10 business days of the request.	No	At County Request	As Needed	NA	Lehigh is in compliance with the conditions of permits and plans required by and issued by BAAQMD. No request by the County has been received by Lehigh for additional permit information.	

All COAs								
COA	**Requirement**	**Summarized Description**	**Annual Report Requirement (Yes/No)**	**Frequency**	**Required Submittal Date**	**Date Submitted**	**Comments**	**Appendix**
37	Provide all amended or newly issued permits from SCC Department of Environmental Health and comply with such permits	The Mine Operator shall obtain and comply with all applicable permits required by the Santa Clara County Hazardous Materials Division of the Department of Environmental Health. The Mine Operator shall provide copies of all permits to the Planning Manager within 10 business days of issuance.	No	Ongoing	NA	8/10/2016	Lehigh is in compliance with the conditions of permits and plans required by and issued by SCC Department of Environmental Health. No request by the County has been received by Lehigh for additional permit information.	
38	Submit schedule of implementation for sedimentation control and boulder removal during the Summer and Fall of 2012	Within 30 days of final RPA approval, submit to the Planning Manager a detailed schedule describing the implementation actions to control sedimentation, remove limestone boulders, and stabilize slopes within the Permanente Creek Restoration Area in the Summer and Fall of 2012, consistent with the RPA.	No	One Occurrence	8/26/2012	8/26/2012	A memorandum documenting attempts to remove boulders was submitted as an appendix in the 2013-2014 Annual Report. Slope stabilization measures have been installed and maintenance is ongoing.	
39	Boulder removal	By October 15, 2012, per the RPA, identified limestone boulders in the PCRA shall be removed. In addition, any limestone boulders identified in the future shall be removed. Submit to the Planning Manager by August 1, 2012, a report and map summarizing the field inspection and identification of all limestone boulders in the PCRA. Submit to the Planning Manager by December 15, 2012, a report and summarizing the actions to remove all limestone boulders in the PRCA, consistent with the "Best Management Practice for Removal of Limestone Boulders from Permanente Creek" (Attachment J to the RPA).	Ongoing	One Occurrence	12/15/2012	9/28/2012	Removal of boulder(s) identified as feasibly removed from Permanente Creek was completed in 2013. Slope stabilization measures have been installed and maintenance is ongoing. Refer to 2013 Annual Report.	
40	PCRA Phase III Restoration Plan	Prior to the start of Permanente Creek restoration activities in Phase III for PCRA subareas 3, 4, 5 and 7, as identified in the RPA, the Mine Operator shall submit to the Planning Manager a Permanente Creek Restoration Plan. The Restoration Plan shall include the elements of the Permanente Creek Long Term Restoration Plan (URS, March 11, 2011) to the extent set forth in the RPA. The Restoration Plan shall include, at minimum, engineered drawings for creek restoration, a riparian re-vegetation plan, hydrology / hydro-geomorphology studies supporting concepts to be used in creek restoration, and a long term monitoring and reporting program. The Creek Restoration Plan shall be reviewed and approved by the County prior to implementation.(See COA Text)	Yes	One time	NA	NA	Phase III was not initiated during the time period covered by this report.	
41	Permits for Grading in Jurisdictional Waters	Prior to the start of any grading or any grading activity that affects jurisdictional resources of the California Department of Fish and Game, Regional Water Quality Control Board, or U.S. Army Corps of Engineers, the Mine Operator must provide to the Planning Manager proof of permits / clearances (or documentation that a permit is not needed).	Yes	Ongoing	NA	NA	There were no grading activities which affected jurisdictional waters during the time period covered by this report.	
42	EMSA Light Prohibition	No night lighting shall be allowed or permitted on the east-facing slope of the EMSA or any other location within the EMSA that would be visible from public locations on the Santa Clara Valley floor including roadways.	Yes	Ongoing	NA	7/26/2013	No lighting is allowed on any location within the EMSA that would be visible from public locations on the Santa Clara Valley floor. Signs are posted in Quarry vehicles and around the property.	

All COAs								
COA	**Requirement**	**Summarized Description**	**Annual Report Requirement (Yes/No)**	**Frequency**	**Required Submittal Date**	**Date Submitted**	**Comments**	**Appendix**
43	ORD Inventory RPA	Within 90 days of final RPA approval, the Mine Operator shall submit to the County and BAAQMD a comprehensive inventory of all RPA-related off-road construction equipment expected to be used during any portion of the RPA period. (See COA Text)	Yes	One-time	9/24/2012	9/25/2012	Not applicable. See COA 45	
44	ORD Inventory EMSA	Within 90 days of final RPA approval, the Mine Operator shall provide a plan for approval by the Planning Manager and BAAQMD demonstrating that off-road equipment to be used for Reclamation of the EMSA would achieve an average 35 percent reduction in Diesel Particulate Matter (DPM) emissions (See COA Text)	Yes	Annual	9/24/2012	9/25/2012	Not applicable. See COA 45	
45	Caretakers Residence Control (in lieu of COA 43 and 44)	In lieu of Condition No. 43 and No. 44 (Mitigation Measures 4.3-3a and 4.3-3b), the Mine Operator may submit within 90 days of the RPA approval evidence establishing to the Planning Manager's satisfaction that there are legally binding restrictions precluding any occupancy of the caretaker's residence located at 2961 Stevens Creek Boulevard, Cupertino	No	One-time	9/24/2012	9/25/2012	Complete.	
46	Avian Species - Preconstruction Surveys	Ground disturbance into undisturbed areas and vegetation (tree and shrub) removal should occur between September 1 and January 30, outside of the breeding season for most bird species. If ground disturbance or tree and shrub removal occurs between February 1 and June 15, preconstruction surveys will be performed within 14 days prior to such activities to determine the presence and location of nesting bird species. If ground disturbance or removal of vegetation occurs between June 16 and August 31, pre-construction surveys will be performed within 30 days prior to such activities. The pre-construction surveys shall be submitted to the Planning Manager no later than five (5) business days prior to the start of such activities. If the tree removal or vegetation clearing shall occur during the non-nesting season, submit documentation both before and after tree removal / vegetation clearing confirmation completion of work within this time frame.(See COA Text)	No	Ongoing	As Needed	NA		
	Contract for Ornithologist to perform Avian Surveys	Thirty (30) days prior to the start of any ground disturbance into undisturbed areas or vegetation removal, the Mine Operator shall submit to the Planning Manager a copy of a contract with a qualified ornithologist to conduct pre-activity surveys.	No	One-time		9/25/2012	Lehigh continues to use WRA, Inc. and GEI, Inc. as qualified ornithologist.	
47	Avian Species - Use of Buffers for to Avoid Nests	If preconstruction surveys determine that active nests are found close enough to the land clearing and tree removal area to be disturbed by these activities, the ornithologist, in consultation with CDFG, will determine the extent of a construction-free buffer zone (typically 250 feet) to be established around the nest to prevent nest abandonment and direct mortality during construction.	No	Ongoing	As Needed	NA		

All COAs								
COA	Requirement	Summarized Description	Annual Report Requirement (Yes/No)	Frequency	Required Submittal Date	Date Submitted	Comments	Appendix
48	Bat Species - Non-Roosting Season	Removal of potential bat roost habitat (buildings, large trees, snags, vertical rock faces with interstitial crevices) or construction activities within 250 feet of potential bat roost habitat should occur in September and October to avoid impacts to bat maternity or hibernation roosts.	No	Ongoing	As Needed			
49	Bat Species – Maternity Roosting Season	If removal of potential bat roost habitat cannot occur during September and October, bat roost surveys will be conducted to determine if bats are occupying roosts. The pre-construction surveys shall be submitted to the Planning Manager no later than five (5) business days prior to the removal of any potential habitat. (See COA Text)	No	Ongoing	As Needed	NA		
50	Special Status Bat Species-Hibernation Season	During the November 1 to March 31 hibernation season, work shall not be conducted within 100 feet of any woodland habitat (as identified in the Draft EIR Figures 4.4-1 through 4.4-4), unless a qualified bat biologist determines that woodland areas do not provide suitable hibernating conditions for bats and they are unlikely to be present in the area. Submit a report by a qualified bat biologist to the Planning Manager verifying the absence of suitable habitat as described above if work is proposed within 100 feet of woodland habitat between November 1 and March 31	No	Ongoing	As Needed	NA		
51	Special Status Bat Species - Maternity Season Emergence	Any trees felled during vegetation removal will not be chipped or otherwise disturbed for a period of 48 hours to allow any undetected bats potentially occupying these trees to escape.	No	Ongoing	As Needed			
52	Bat Roost Replacement	All special-status bat roosts destroyed by the Project shall be replaced by the Mine Operator at a 1:1 ratio onsite with a roost suitable for the displaced species (e.g., bat houses for colonial roosters). The design of such replacement habitat shall be in consultation with CDFG. (See COA Text)	No	Ongoing	As Needed	NA		
53	San Francisco Dusky Footed Woodrat	Within 30 days prior to initial ground disturbance in woodland or scrub/chaparral communities, (as identified in the Draft EIR Figures 4.4-1 through 4.4-4), conduct pre-construction surveys for active woodrat stick nests that could be directly impacted. Surveys should take place in all suitable habitat types within the Project Area. Sixty (60) days prior to initial ground disturbance within woodland or scrub / chaparral communities, the Mine Operator shall submit to the Planning Manager a copy of a contract with a qualified biologist to conduct pre-activity surveys. (See COA Text)	No	Ongoing	As Needed	NA		
54	Proper Food Waste Disposal	To reduce indirect impacts on San Francisco dusky-footed woodrat by attracting urban-adapted predators, trash and food waste shall be disposed of in proper waste receptacles and emptied on a regular basis. Additionally, quarry personnel, contractors, and visitors shall not feed wildlife within the Permanente Property and appropriate site signage and employee education shall facilitate this condition	No	Ongoing	NA	NA	Proper waste receptacles are available onsite and are emptied on a regular basis. Signs have been posted.	

All COAs								
COA	**Requirement**	**Summarized Description**	**Annual Report Requirement (Yes/No)**	**Frequency**	**Required Submittal Date**	**Date Submitted**	**Comments**	**Appendix**
55	Introduction of Invasive Plants or Pathogens	If regulated or restricted plant materials are to be transported between the Project Area and a location in a non-infested county or state, the spread of the Sudden Oak Death pathogen shall be avoided by obtaining the necessary certificates of transport pursuant to the regulations (See COA Text)	Yes	Ongoing	NA	NA	No plant material was transported into or out of the Project Area.	
56	Sudden Oak Death Prevention	To reduce the possibility of spreading Sudden Oak Death to oak woodlands in the Study Area, the Mine Operator shall implement control measures (See COA Text)	No	Ongoing	NA	NA	All equipment which does not remain onsite, including: shoes, tools, and vehicles are decontaminated prior to, and after, any work in vegetated areas. Sanitation kits are kept at the Quarry office.	
57	Wetland Identification and Avoidance	A qualified wetland biologist shall physically delineate all federal and state waters and wetland features identified in the 2008 wetland delineation (WRA, 2008) before any Permanente Creek Reclamation Area (PCRA) activities begin, and when feasible, reclamation activities shall avoid filling these areas unless authorized by the appropriate permitting agencies. Prior to the start of PCRA activities, the wetland biologist shall submit a report to the Planning Manager showing the wetland areas delineated and the installation of all fencing and barriers (photos and map).(See COA Text)	No	One Occurrence and Ongoing	As Needed	7/31/2012	No wetlands were disturbed during the reporting period.	
58	Wetland Mitigation Plan	If filling of jurisdictional waters or wetlands is not feasible, control measures shall be implemented: (See COA Text)	Yes	Ongoing	NA	NA	No wetlands were disturbed during the reporting period.	
59	PCRA Grading During Dry Season to Avoid California red Legged Frog Impact	To minimize disturbance to dispersing or foraging CRLF, all grading activity within PCRA subareas 4 through 7 shall be conducted during the dry season, generally between May 1 and October 15, or before the onset of the rainy season, whichever occurs first, unless exclusion fencing is utilized. Construction that commences in the dry season may continue into the rainy season if exclusion fencing is placed around the construction zone to keep the frog from entering the construction area.	Yes	Ongoing	NA	NA	No grading or construction activity took place within PCRA subareas 4,5,6,or 7 during the reporting period.	
60	CRLF Pre-construction survey	Pre-construction surveys for CRLF shall be conducted prior to construction activities within PCRA subareas 4 through 7. If CRLF are observed in the construction area or access areas, they shall be removed from the area by a USFWS permitted biologist and temporarily relocated to nearby suitable aquatic habitat	Yes	Ongoing	NA	NA	No grading or construction activity took place within PCRA subareas 4,5,6,or 7 during the reporting period.	
61	PRCA Work during Daylight hours for CRLF Avoidance	All restoration activities within PCRA subareas 4 through 7 shall cease one half hour before sunset and shall not begin prior to one half hour after sunrise. Additionally, restoration activities shall not occur during rain events, as CRLF are most likely to disperse during periods of precipitation	Yes	Ongoing	NA	NA		
62	Document History of Kaiser Permanente Quarry Mining District	The Mine Operator shall document the physical characteristics and their historic context of the contributing features of the Kaiser Permanente Quarry Mining District (See COA Text)	Yes	60 Days Prior to modification of conveyor	NA	NA	Lehigh submitted documentation on 10/3/2018 regarding the historical features of the Kaiser Permanente Quarry Mining District. County Archive is determining proper procedure to officially accept and record the documentation.	

All COAs								
COA	**Requirement**	**Summarized Description**	**Annual Report Requirement (Yes/No)**	**Frequency**	**Required Submittal Date**	**Date Submitted**	**Comments**	**Appendix**
63	Salvage Permanente Quarry Conveyor System	Prior to any of the following: modification, relocation, removal, or demolition of the Permanente Quarry Conveyor System, the Mine Operator shall salvage and/or relocate a representative portion of the Permanente Quarry Conveyor System and the remains of the early 1940s crusher, which constitute character-defining features that otherwise would be lost as a part of implementation of the Project. (See COA Text)	Yes		NA	NA	Lehigh submitted documentation on 10/3/2018 regarding the historical features of the Kaiser Permanente Quarry Mining District. County Archive is determining proper procedure to officially accept and record the documentation.	
64	Prepare Public Information Prior to Conveyor Salvage	At least sixty (60) days prior to commencement of any work as described above Condition #63, the Mine Operator shall prepare public information programs to educate the general public on the historic nature of the potential Kaiser Permanente Quarry Mining District, (See COA Text)	Yes		NA	NA	No modification to the historic conveyor system took place during the 2018-2019 reporting period.	
65	Cease Activity if Cultural Resources Are Found	If cultural resources are encountered during Project implementation the Mine Operator shall notify the Planning Manager and all activity within 100 feet of the find shall stop until the cultural resource is evaluated by a qualified archaeologist and a Native American representative (See COA Text)	Yes	Ongoing	NA	NA	No cultural resources were encountered during the 2018-2019 reporting period.	
66	Cease Activity if Paleontological Resources Are Found	If a paleontological resource is encountered during implementation of the RPA the Mine Operator shall notify the Planning Manager, and all activity within 100 feet of the find shall stop until it can be evaluated by a qualified paleontologist (See COA Text)	Yes	Ongoing	NA	NA	No paleontological resources were encountered during the 2018-2019 reporting period.	
67	Notify County Coroner if Any Human Remains are Found	In the event that human skeletal remains are encountered, the Mine Operator is required to immediately notify the County Coroner.(See COA Text)	Yes	Ongoing	NA	NA	No human remains were encountered during the 2018-2019 reporting period.	
68	Avoidance of Slope Material Falling Into Creek in PRCA Areas	In all areas requiring the use of excavators for grading within the Permanente Creek Reclamation Area (PCRA) (e.g., access road in-sloping, installation/repair of sedimentation basins, and removal of slide debris), the Mine Operator and/or its contractor shall begin excavations from the top of slope and proceed downward. The Mine Operator and/or its contractor shall not undercut sloped materials unless no other option is feasible as determined by a registered geotechnical engineer (e.g., excessively sloped or otherwise inaccessible terrain). In all areas of the PCRA where excavations would occur in sloped materials, the Mine Operator and/or its contractor shall install barriers immediately downslope of the activity. (See COA Text)	Yes	Ongoing	NA	NA	No grading activity took place within PCRA during the reporting period.	
69	Submit Geotechnical Plan Review	Within thirty (30) days following approval of the RPA, submit a Geotechnical Engineer's Plan Review letter that confirms the RPA, as modified by other conditions of approval, conforms with the recommendations presented in Golder's Report (RPA Appendix C, dated November 2011).(See COA Text)	No	One Occurrence	7/26/2012	7/26/2012	Complete.	

All COAs								
COA	**Requirement**	**Summarized Description**	**Annual Report Requirement (Yes/No)**	**Frequency**	**Required Submittal Date**	**Date Submitted**	**Comments**	**Appendix**
70	Follow Geotechnical Design for EMSA Filling	The geotechnical design recommendations provided by Golder Associates (RPA Appendix C, November 2011) are being implemented as part of the ongoing stockpiling activities within the EMSA(See COA Text)	No	Ongoing	NA	NA	Noted.	
71	Prepare GHG Inventory for Reclamation Activities	the Mine Operator shall conduct an annual inventory of GHG emissions and shall report those emissions (See COA Text)	Yes	Ongoing	10/1/2019		An annual report greenhouse gas emissions inventory is provided in Appendix F.	Appendix F: Annual Greenhouse Gas Inventory Report
	Register with Climate registry	The Mine Operator shall become a reporting member of The Climate Registry	No	Ongoing		9/25/2012	Registration was not possible for Lehigh Permanente Quarry. An attempt to register was made in 2012, however, they were denied as a single mining operation.	
72	GHG reduction Plan	The Mine Operator shall prepare, submit for County and BAAQMD approval, make available to the public, and implement a Greenhouse Gas Emissions Reduction Plan (GHG Plan) containing quantifiable strategies to ensure that the Project-related incremental increase of GHG emissions does not exceed 1,100 MT Co2e per year. (See COA Text) The Greenhouse Gas Emissions Reduction Plan shall be submitted to the Planning Manager within 90 days of final RPA Approval.	No	Ongoing	9/24/2012	9/25/2012	Complete.	
73	Obtain GHG Offsets	If the Mine Operator is unable to reduce the Project-related incremental increase of GHG emissions to below 1,100 MT Co2e per year per Condition #72, the Mine Operator shall offset all remaining Project incremental emissions above that threshold. (See COA Text)	Yes	Ongoing	NA	NA	The project produced less than 1,100 metric tons of CO2. See Appendix F.	Appendix F: Annual Greenhouse Gas Inventory Report
74	Verification of Non-Limestone-Containing Material Used as Cover in EMSA and WMSA	A California Certified Engineering Geologist shall be onsite during reclamation to verify that non-limestone run-of-mine rock is used as cover on the EMSA and WMSA. In addition, the Geologist shall observe and document activities associated with placing the final overburden on the Quarry Pit (i.e., ensuring that organic material is mixed to specifications).(See COA Text)	Yes	Ongoing	NA	NA	Final reclamation did not begin during the time period covered by this report. Lehigh is documenting that non-limestone overburden is being placed in the EMSA, and upon final placement, this requirement will be satisfied.	
75	The County may retain a third party geologist.	1. The County reserves the right to retain, if it deems necessary, at the expense of the Mine Operator, a third-party California-certified Engineering Geologist, to provide independent oversight or monitoring to implement Condition #74.	No	Ongoing	NA	NA	Noted.	
76	Water Quality Monitoring Program	Within ninety (90) days of RPA approval, the Mine Operator shall begin and continue throughout the backfilling and reclamation phases and for 5 years following completion of reclamation and for 5 years following the start of groundwater discharge from the Quarry Pit into Permanente Creek as described on page 4.10-39 of the Final Environmental Impact Report, a Verification and Water Quality Monitoring Program. (See COA Text)	Yes	Ongoing	10/1/2019	10/1/2019	See Appendix D.	Appendix D: Water Quality Monitoring Memo

All COAs								
COA	**Requirement**	**Summarized Description**	**Annual Report Requirement (Yes/No)**	**Frequency**	**Required Submittal Date**	**Date Submitted**	**Comments**	**Appendix**
77	Reclamation is Complete when all WQS are met	Reclamation of the Quarry Pit, EMSA, and WMSA areas shall not be considered complete until 5 years of water quality testing as described above demonstrate to the satisfaction of the Planning Manager that selenium in surface water runoff and any point source discharges has been reduced below all applicable water quality standards, including Basin Plan Benchmarks.	Yes		NA	NA	Final reclamation did not begin during the time period covered by this report.	
78	Stormwater BMPs	Within 90 days of RPA approval, the Mine Operator shall implement stormwater and sediment management controls in addition to general BMPs required by the SWPPP in active and inactive reclamation areas throughout Phase I, II, and III of the RPA. (See COA Text)	Yes	Ongoing	10/1/2018	Need	Stormwater and sediment management controls in addition to general BMPs required by the SWPPP in active and inactive reclamation areas have been installed and maintenance is ongoing.	Appendix A: 2018-2019 Compliance Actions and BMP Status Report Appendix B: 2018-2019 Erosion Control Inspection Reports
79	Stormwater Monitoring Plan	Prior to the start of reclamation activities, the Mine Operator shall develop a Stormwater Monitoring Plan for sampling and testing stormwater, that would supplement preexisting surface water monitoring required by General Industrial Storm Water and Sand and Gravel NPDES Permit and any other applicable permits designed to specifically monitor surface water during reclamation activities in active and inactive excavation and backfill areas, and locations where water discharges to Permanente Creek. (See COA Text)	Yes	Ongoing	10/1/2012	8/24/2012	Water quality testing has been conducted in accordance with the Interim Stormwater Monitoring Plan.	Appendix D: Water Quality Monitoring Memo
80	Monitor BMP Effectiveness for EMSA	Within 30 days of RPA approval, sampling and testing shall occur within 24 hours after a qualifying rain event. For purposes of triggering Planning Commission review, the sampling shall occur at locations where water discharges to Permanente Creek. (See COA Text)	Yes	Ongoing	NA		Water quality testing has been conducted in accordance with the Interim Stormwater Monitoring Plan.	Appendix D: Water Quality Monitoring Memo
81	Monitor BMP Effectiveness for WMSA and Quarry	Within 30 days of the start of reclamation activities for Phase II, the Mine Operator shall conduct monthly water sampling and testing results in compliance with the Interim Stormwater Monitoring Plan (See COA Text)	Yes	Ongoing	NA			
82	Design, Pilot Testing, and Implementation of Selenium Treatment Facility	Within 30 days of RPA approval, the Mine Operator shall begin designing a treatment facility (or alternative) and pilot system for discharge into Permanente Creek. (See COA Text)	Yes	Ongoing	NA	9/19/2014	Water quality testing has been conducted in accordance with the Interim Stormwater Monitoring Plan. A feasibility report for the Interim Treatment System was composed 9/19/2014 and submitted to the County.	

All COAs								
COA	**Requirement**	**Summarized Description**	**Annual Report Requirement (Yes/No)**	**Frequency**	**Required Submittal Date**	**Date Submitted**	**Comments**	**Appendix**
83	Construct of Onsite Water Detention Facility	The Mine Operator shall design and construct detention facilities that would 1) manage increased runoff caused by the reclaimed Quarry pit, (See COA Text)	Yes		NA	NA	Final reclamation did not begin during the time period covered by this report. No excess runoff was caused by the reclaimed Quarry Pit.	
84	Stormwater Control to Avoid Ponded Water and Selenium Accumulation	The Mine Operator shall incorporate drainage features into the final drainage design for the Quarry pit area to eliminate the potential for surface ponding on the floor of the Quarry pit once it has reached its final elevation (990 amsl).(See COA Text)	Yes		NA	NA	Final reclamation did not begin during the time period covered by this report.	
85	Mosquito Control for Ponded Water	Any body of water created during the operation of the quarry, both during excavation and processing the material, shall be maintained to provide for mosquito control and to prevent creation of any health hazards or public nuisance.	Yes	Ongoing	NA	NA	All bodies of water created during the operation of the quarry have been maintained to provide mosquito control and prevent the creation of any health hazards or public nuisance.	
86	Provide Plans for Riprap Energy Dissipaters	Sixty (60) days following RPA approval, the Mine Operator shall provide to the Planning Manager revised plans that show redesigned rip-rap energy dissipaters per the Association of Bay Area Governments (ABAG) standard for the 25 year storm for all discharge points on the reclamation plans.	No	Once	8/24/2012	8/24/2012	Complete.	
87	Prohibit Night Operations in EMSA	The Mine Operator shall prohibit all heavy equipment operations in the northeasterly 11.5 acres of the EMSA (as shown in Draft EIR, Figure 4.13-8) during nighttime hours (i.e., between 10:00 p.m. to 7:00 a.m.).	Yes	Ongoing	NA	7/26/2012	No nighttime equipment operations occur in the EMSA.	
88	Caretakers Residence Control or Prohibit EMSA Operations within 1600 feet	The Mine Operator shall either: (1) limit all operations in the EMSA within 1,600 feet of the caretaker's residence (as shown in Figure 4.13-8) to no more than one 8-hour shift per day, or (2) submit evidence establishing to the County's satisfaction that there are legally-binding restrictions precluding any occupancy of the caretaker's residence during the entirety of Phase 1 of the RPA.	No	Once	NA	7/26/2012	Complete.	
89	Signage within EMSA regarding Light Prohibitions and Noise restrictions (COA 42 and 87)	Within thirty (30) days of the RPA Approval, the Mine Operator shall post a sign inside all mine equipment operating in the EMSA area with the text from Condition #42 (Light and Glare) and Conditions # 87 and # 88 (Noise). The sign shall be posted prominently within view of the vehicle operator. Within 30 days of the RPA approval, the Mine Operator shall submit to the Planning Manager photo documentation demonstrating compliance of this.	No	Maintain	7/26/2012	7/26/2012	Complete - Signs are in place and in good condition.	

APPENDIX A:

2018-2019 COMPLIANCE ACTIONS AND BMP STATUS REPORT

EXECUTIVE SUMMARY

The purpose of this report is to document the stormwater and erosion control actions that have been completed to comply with the requirements of the Conditions of Approval (COAs) for the Permanente Quarry Reclamation Plan Amendment (RPA) during the period of July 1, 2018 to June 30, 2019.

Between July 1, 2018 and June 30, 2019, Lehigh Hanson completed several actions that ensured compliance with various COAs at the Quarry. This report lists those actions completed and previously reported to Santa Clara County (County) and describes those actions that have been initiated, and/or completed since the last submittal (October 1, 2018). Actions include installation of erosion control Best Management Practices (BMPs) in order to prevent soil erosion in areas of topsoil stockpiling; maintenance and repair of previously installed BMPs; and the diversion of stormwater runoff to containment basins. Figures depicting erosion control BMP installations and compliance activities from the 2018-2019 reporting year are provided in Appendix A. Further actions are ongoing as required by the RPA and COAs.

TABLE OF CONTENTS

1.0 INTRODUCTION 3

2.0 PURPOSE 3

3.0 REPORTING REQUIREMENTS 3

4.0 COMPLIANCE ACTIONS 3

4.1 Compliance Actions Reported in Previous Submittals 3

4.2 Compliance Actions Completed Since 2017-2018 Annual Report Submittal 3

4.3 Planned Future Compliance Actions 4

4.3.1 Planned Hydroseeding 4

4.3.2 Potential BMP Removal 4

5.0 SUMMARY 4

1.0 INTRODUCTION

The RPA for Lehigh Permanente Quarry (Quarry) located at 24001 Stevens Creek Boulevard, in unincorporated Santa Clara County, amends and supersedes the previously approved 1985 Permanente Quarry Reclamation Plan for a 20-year period to satisfy the reclamation requirements of the Surface Mining and Reclamation Act (SMARA) of 1975. The RPA encompasses 1,238.7 acres within the Mine Operator's 3,510-acre ownership.

Reclamation activities are being implemented in three phases over an estimated 20-year period. The Quarry is currently in Phase I, which involves reclamation activities in the East Material Storage Area (EMSA) and the Permanente Creek Restoration Area (PCRA) and continuation of existing mining activities in the Western Material Storage Area (WMSA) and Quarry Pit.

2.0 PURPOSE

The purpose of this compliance actions report is to document the stormwater and erosion control actions that have been completed to comply with the requirements of the Santa Clara County Conditions of Approval (COAs), approved by the Planning Commission, June 7, 2012 and modified by the Board of Supervisors on June 26, 2012. This compliance actions report includes those actions that have been ongoing or completed since the last submittal and refer to past actions submitted in previous reports.

3.0 REPORTING REQUIREMENTS

Generally, the COAs call for an annual report to be completed by the County by December 1 of the year and for the mine operator, Lehigh Hanson (Lehigh), to present all data and compliance actions to the County by October 1. To inform the annual report, Lehigh wishes to present a report of the stormwater and erosion control actions carried out to date in order to comply with the COAs. This report will serve to provide a record to the County and track the reclamation actions that have been completed to date.

4.0 COMPLIANCE ACTIONS

4.1 Compliance Actions Reported in Previous Submittals

Stormwater and erosion control actions taken to address COA compliance began immediately after RPA finalization in June 2012 and continue to present. Actions taken to address COA compliance are required to be reported annually as per COA #8. Lehigh has submitted annual reports of COA compliance actions as required per COA #8.

4.2 Compliance Actions Completed Since 2017-2018 Annual Report Submittal

All erosion control BMPs previously reported from previous annual reports have been maintained and repaired as needed. Lehigh has worked with WRA, GEI, ECI (Ecological Concerns Inc.) and Liberty Industrial to maintain effective and timely BMP management. To date, only BMPs that have been deemed entirely non-essential have been removed or left in place.
As per COA #33, sedimentation basins are routinely inspected and cleaned of vegetation and sediment, when necessary, to maintain good condition and proper function. Hydroseeding was applied to areas in the Rock plant, EMSA and the Yeager Yard (see attached memo). From July 2018 - June 2019, approximately 75 cubic yards of silt was cleaned out from the silting basin in WMSA & Rock plant areas. The silt was deposited in WMSA.

4.3 Planned Future Compliance Actions

Beyond the routine inspection and maintenance of existing BMPs, actions are already planned to take place during the 2019-2020 reporting year for COA compliance. This is not meant to be a complete list of next year's actions and actions taken during the upcoming year will follow the adaptive management process. Actions to complete or advance the fulfillments of the COAs that are planned to take place during the 2019-2020 reporting year are described below.

4.3.1 Planned Hydroseeding

In order to comply with COAs #27 and #78b, Lehigh plans to hydroseed all new cleanfill stockpiles to be used for reclamation and interim reclaimed areas that directly or indirectly drain to Permanente Creek. Planned hydroseeding areas will receive either the "erosion control seed mix".

4.3.2 Potential BMP Removal

Select BMP's, such as silt fences and straw wattles, are expected to be removed or left in place, rather than replaced after the 2019-2020 rainy season. BMP inspections will be performed by Lehigh's Contractor to determine the effectiveness of BMP's and recommend removal or leave in place.

5.0 SUMMARY

During the 2018-2019 reporting year, Lehigh provided dedicated in-house staff to regularly oversee the erosion control BMPs and their efficacy. Lehigh preemptively addressed any maintenance or additions needed ahead of storm events, enhancing the ability to comply with the requirements of the COAs and the RPA in a timely manner. All BMPs and stormwater controls were fully functional throughout the 2018-2019 rainy season. Monitoring will continue to take place, and actions will continue to be implemented in all areas to keep within compliance.

BMP Status Report 2019

Lehigh Permanente Quarry,
Santa Clara County,
California

Quarry Areas

- Cement Factory
- Crusher/Support Area
- EMSA
- North Quarry
- PCRA Subareas
- Surge Pile/Rock Plant
- WMSA

BMP Infrastructure

- Hay Bales
- Silt Fence
- Straw Wattles
- Wire Back Silt Fence
- Other Linear BMPs
- Unmaintained Linear BMPS
- Check Dams
- Other Point BMPs
- Unmaintained Point BMPs
- Siltation Basin
- Straw Wattles
- Other BMP Areas
- Unmaintained BMP Areas

N

0 200 400

Feet

BMP Status Report 2019

Lehigh Permanente Quarry,
Santa Clara County,
California

Quarry Areas

- Cement Factory
- Crusher/Support Area
- EMSA
- North Quarry
- PCRA Subareas
- Surge Pile/Rock Plant
- WMSA

BMP Infrastructure

- Hay Bales
- Silt Fence
- Straw Wattles
- Wire Back Silt Fence
- Other Linear BMPs
- Unmaintained Linear BMPS
- Check Dams
- Other Point BMPs
- Unmaintained Point BMPs
- Siltation Basin
- Straw Wattles
- Other BMP Areas
- Unmaintained BMP Areas

N

0 200 400

Feet

BMP Status Report 2019

Lehigh Permanente Quarry,
Santa Clara County,
California

Quarry Areas

- Cement Factory
- Crusher/Support Area
- EMSA
- North Quarry
- PCRA Subareas
- Surge Pile/Rock Plant
- WMSA

BMP Infrastructure

- Hay Bales
- Silt Fence
- Straw Wattles
- Wire Back Silt Fence
- Other Linear BMPs
- Unmaintained Linear BMPS
- Check Dams
- Other Point BMPs
- Unmaintained Point BMPs
- Siltation Basin
- Straw Wattles
- Other BMP Areas
- Unmaintained BMP Areas

N

200 40

Feet

BMP Status Report 2019

Lehigh Permanente Quarry,
Santa Clara County,
California

Quarry Areas

- Cement Factory
- Crusher/Support Area
- EMSA
- North Quarry
- PCRA Subareas
- Surge Pile/Rock Plant
- WMSA

BMP Infrastructure

- Hay Bales
- Silt Fence
- Straw Wattles
- Wire Back Silt Fence
- Other Linear BMPs
- Unmaintained Linear BMPS
- Check Dams
- Other Point BMPs
- Unmaintained Point BMPs
- Siltation Basin
- Straw Wattles
- Other BMP Areas
- Unmaintained BMP Areas

N

200

Feet

BMP Status Report 2019

Lehigh Permanente Quarry,
Santa Clara County,
California

Quarry Areas

- Cement Factory
- Crusher/Support Area
- EMSA
- North Quarry
- PCRA Subareas
- Surge Pile/Rock Plant
- WMSA

BMP Infrastructure

- Hay Bales
- Silt Fence
- Straw Wattles
- Wire Back Silt Fence
- Other Linear BMPs
- Unmaintained Linear BMPS
- Check Dams
- Other Point BMPs
- Unmaintained Point BMPs
- Siltation Basin
- Straw Wattles
- Other BMP Areas
- Unmaintained BMP Areas

N

200

Feet

BMP Status Report 2019

Lehigh Permanente Quarry,
Santa Clara County,
California

Quarry Areas

- Cement Factory
- Crusher/Support Area
- EMSA
- North Quarry
- PCRA Subareas
- Surge Pile/Rock Plant
- WMSA

BMP Infrastructure

- Hay Bales
- Silt Fence
- Straw Wattles
- Wire Back Silt Fence
- Other Linear BMPs
- Unmaintained Linear BMPS
- Check Dams
- Other Point BMPs
- Unmaintained Point BMPs
- Siltation Basin
- Straw Wattles
- Other BMP Areas
- Unmaintained BMP Areas

N

200

Feet

BMP Status Report 2019

Lehigh Permanente Quarry,
Santa Clara County,
California

Quarry Areas

- Cement Factory
- Crusher/Support Area
- EMSA
- North Quarry
- PCRA Subareas
- Surge Pile/Rock Plant
- WMSA

BMP Infrastructure

- Hay Bales
- Silt Fence
- Straw Wattles
- Wire Back Silt Fence
- Other Linear BMPs
- Unmaintained Linear BMPS
- Check Dams
- Other Point BMPs
- Unmaintained Point BMPs
- Siltation Basin
- Straw Wattles
- Other BMP Areas
- Unmaintained BMP Areas

N

0 200 400
Feet

BMP Status Report 2019

Lehigh Permanente Quarry,
Santa Clara County,
California

Quarry Areas

- Cement Factory
- Crusher/Support Area
- EMSA
- North Quarry
- PCRA Subareas
- Surge Pile/Rock Plant
- WMSA

BMP Infrastructure

- Hay Bales
- Silt Fence
- Straw Wattles
- Wire Back Silt Fence
- Other Linear BMPs
- Unmaintained Linear BMPS
- Check Dams
- Other Point BMPs
- Unmaintained Point BMPs
- Siltation Basin
- Straw Wattles
- Other BMP Areas
- Unmaintained BMP Areas

N

0 200 400

Feet

BMP Status Report 2019

Lehigh Permanente Quarry,
Santa Clara County,
California

Quarry Areas

- Cement Factory
- Crusher/Support Area
- EMSA
- North Quarry
- PCRA Subareas
- Surge Pile/Rock Plant
- WMSA

BMP Infrastructure

- Hay Bales
- Silt Fence
- Straw Wattles
- Wire Back Silt Fence
- Other Linear BMPs
- Unmaintained Linear BMPS
- Check Dams
- Other Point BMPs
- Unmaintained Point BMPs
- Siltation Basin
- Straw Wattles
- Other BMP Areas
- Unmaintained BMP Areas

N

0 200 400

Feet

BMP Status Report 2019

Lehigh Permanente Quarry,
Santa Clara County,
California

Quarry Areas

- Cement Factory
- Crusher/Support Area
- EMSA
- North Quarry
- PCRA Subareas
- Surge Pile/Rock Plant
- WMSA

BMP Infrastructure

- Hay Bales
- Silt Fence
- Straw Wattles
- Wire Back Silt Fence
- Other Linear BMPs
- Unmaintained Linear BMPS
- Check Dams
- Other Point BMPs
- Unmaintained Point BMPs
- Siltation Basin
- Straw Wattles
- Other BMP Areas
- Unmaintained BMP Areas

N

0 200 400

Feet

BMP Status Report 2019

Lehigh Permanente Quarry,
Santa Clara County,
California

Quarry Areas

- Cement Factory
- Crusher/Support Area
- EMSA
- North Quarry
- PCRA Subareas
- Surge Pile/Rock Plant
- WMSA

BMP Infrastructure

- Hay Bales
- Silt Fence
- Straw Wattles
- Wire Back Silt Fence
- Other Linear BMPs
- Unmaintained Linear BMPS
- Check Dams
- Other Point BMPs
- Unmaintained Point BMPs
- Siltation Basin
- Straw Wattles
- Other BMP Areas
- Unmaintained BMP Areas

N

0 200 400

Feet

BMP Status Report 2019

Lehigh Permanente Quarry,
Santa Clara County,
California

Quarry Areas

- Cement Factory
- Crusher/Support Area
- EMSA
- North Quarry
- PCRA Subareas
- Surge Pile/Rock Plant
- WMSA

BMP Infrastructure

- Hay Bales
- Silt Fence
- Straw Wattles
- Wire Back Silt Fence
- Other Linear BMPs
- Unmaintained Linear BMPS
- Check Dams
- Other Point BMPs
- Unmaintained Point BMPs
- Siltation Basin
- Straw Wattles
- Other BMP Areas
- Unmaintained BMP Areas

N

0 200 400

Feet

BMP Status Report 2019

Lehigh Permanente Quarry,
Santa Clara County,
California

Quarry Areas

- Cement Factory
- Crusher/Support Area
- EMSA
- North Quarry
- PCRA Subareas
- Surge Pile/Rock Plant
- WMSA

BMP Infrastructure

- Hay Bales
- Silt Fence
- Straw Wattles
- Wire Back Silt Fence
- Other Linear BMPs
- Unmaintained Linear BMPS
- Check Dams
- Other Point BMPs
- Unmaintained Point BMPs
- Siltation Basin
- Straw Wattles
- Other BMP Areas
- Unmaintained BMP Areas

N

0 200 400

Feet

BMP Status Report 2019

Lehigh Permanente Quarry,
Santa Clara County,
California

Quarry Areas

- Cement Factory
- Crusher/Support Area
- EMSA
- North Quarry
- PCRA Subareas
- Surge Pile/Rock Plant
- WMSA

BMP Infrastructure

- Hay Bales
- Silt Fence
- Straw Wattles
- Wire Back Silt Fence
- Other Linear BMPs
- Unmaintained Linear BMPS
- Check Dams
- Other Point BMPs
- Unmaintained Point BMPs
- Siltation Basin
- Straw Wattles
- Other BMP Areas
- Unmaintained BMP Areas

N

0 200 400

Feet

BMP Status Report 2019

Lehigh Permanente Quarry,
Santa Clara County,
California

Quarry Areas

- Cement Factory
- Crusher/Support Area
- EMSA
- North Quarry
- PCRA Subareas
- Surge Pile/Rock Plant
- WMSA

BMP Infrastructure

- Hay Bales
- Silt Fence
- Straw Wattles
- Wire Back Silt Fence
- Other Linear BMPs
- Unmaintained Linear BMPS
- Check Dams
- Other Point BMPs
- Unmaintained Point BMPs
- Siltation Basin
- Straw Wattles
- Other BMP Areas
- Unmaintained BMP Areas

N

0 200 400

Feet

BMP Status Report 2019

Lehigh Permanente Quarry,
Santa Clara County,
California

Quarry Areas

- Cement Factory
- Crusher/Support Area
- EMSA
- North Quarry
- PCRA Subareas
- Surge Pile/Rock Plant
- WMSA

BMP Infrastructure

- Hay Bales
- Silt Fence
- Straw Wattles
- Wire Back Silt Fence
- Other Linear BMPs
- Unmaintained Linear BMPS
- Check Dams
- Other Point BMPs
- Unmaintained Point BMPs
- Siltation Basin
- Straw Wattles
- Other BMP Areas
- Unmaintained BMP Areas

N

0 200 400

Feet

BMP Status Report 2019

Lehigh Permanente Quarry,
Santa Clara County,
California

Quarry Areas

- Cement Factory
- Crusher/Support Area
- EMSA
- North Quarry
- PCRA Subareas
- Surge Pile/Rock Plant
- WMSA

BMP Infrastructure

- Hay Bales
- Silt Fence
- Straw Wattles
- Wire Back Silt Fence
- Other Linear BMPs
- Unmaintained Linear BMPS
- Check Dams
- Other Point BMPs
- Unmaintained Point BMPs
- Siltation Basin
- Straw Wattles
- Other BMP Areas
- Unmaintained BMP Areas

N

0 200
Feet

BMP Status Report 2019

Lehigh Permanente Quarry,
Santa Clara County,
California

Quarry Areas

- Cement Factory
- Crusher/Support Area
- EMSA
- North Quarry
- PCRA Subareas
- Surge Pile/Rock Plant
- WMSA

BMP Infrastructure

- Hay Bales
- Silt Fence
- Straw Wattles
- Wire Back Silt Fence
- Other Linear BMPs
- Unmaintained Linear BMPS
- Check Dams
- Other Point BMPs
- Unmaintained Point BMPs
- Siltation Basin
- Straw Wattles
- Other BMP Areas
- Unmaintained BMP Areas

N

0 200 400

Feet

BMP Status Report 2019

Lehigh Permanente Quarry,
Santa Clara County,
California

Quarry Areas

- Cement Factory
- Crusher/Support Area
- EMSA
- North Quarry
- PCRA Subareas
- Surge Pile/Rock Plant
- WMSA

BMP Infrastructure

- Hay Bales
- Silt Fence
- Straw Wattles
- Wire Back Silt Fence
- Other Linear BMPs
- Unmaintained Linear BMPS
- Check Dams
- Other Point BMPs
- Unmaintained Point BMPs
- Siltation Basin
- Straw Wattles
- Other BMP Areas
- Unmaintained BMP Areas

N

0 200 400

Feet

Lehigh Southwest Cement Company
24001 Stevens Creek Boulevard
Cupertino, California 95014
(408) 996-4000

Memo

To:	Ms. Tressa Jackson	**From:**	Manjunath Shivalingappa
Copy:	NA	**Date:**	09-23-2019
Subject:	2018 Hydroseeding Activity		

From October 16 - 24, 2018 Hydroseeding was applied to areas in the Rock plant, EMSA and the Yeager Yard.

<u>Rock Plant Haul Road</u> – Check dams, wattles installation and hydroseeding using the approved seed mix. Hydroseeded area: 2 acres.

<u>EMSA Topsoil Storage</u> – Silt fence installation and hydroseeding using erosion control seed mix. Hydroseeded area: 5 acres.

<u>Yeager Yard</u> – Silt fence installation and hydroseeding using the approved seed mix. Hydroseeded area: 12 acres.

APPENDIX B:

2018-2019 EROSION CONTROL INSPECTION REPORT

Lehigh Southwest Cement Company
24001 Stevens Creek Boulevard
Cupertino, California 95014
(408) 996-4000

EROSION CONTROL INSPECTION REPORTS

PERMANENTE QUARRY, SANTA CLARA COUNTY, CALIFORNIA

Inspection Reports Included:

- September 2018
- October 2018
- November 2018
- December 2018
- January 2019
- February 2019
- March 2019
- April 2019
- May 2019
- June 2019
- July 2019
- August 2019

Memorandum

To: Manjunath Shivalingappa, Lehigh Hanson
CC: Erika Guerra, Lehigh Hanson

From: Nick Brinton
brinton@wra-ca.com
ext. 1780

Date: October 4, 2018
Subject: Permanente Quarry – September 2018 Erosion Control Inspection

Per COA 78 of the Final Conditions of Approval (COA), the Mine Operator shall:

> "…regularly inspect all stormwater and erosion controls, especially before and following qualifying rain events. Inspections shall be documented and periodically reported. Any violations shall be corrected immediately." And
>
> "Ensure that all stormwater, erosion, and sediment control BMPs are installed, inspected, maintained, and repaired under the direction of either a California certified engineer, geologist, or landscape architect, a registered professional hydrologist, or a certified erosion control specialist."

WRA has been actively inspecting stormwater, erosion, and sediment control BMPs in the RPA. WRA reports monthly on the inspections of the various BMP's which include:

- Check dams on the haul roads.
- Erosion control blankets (i.e. jute netting), straw wattles, and silt fence installations.
- Berms around where stockpiles are placed.
- Sedimentation and stormwater collection ponds.
- Water conveyance berms and ditches.

During the month of September 2018, David Zwick, WRA's QSD conducted one monthly COA site inspection at Permanente Quarry. The monthly COA inspection occurred on September 29, 2018 near the end of the month to assure that no unforeseen rain events may occur and affect results of the inspection. Areas within the Lehigh Permanente Quarry inspected during WRA's site visit included:

- PCRA Subareas up to Pond 13,
- the East Materials Storage Area (EMSA),
- Quarry Pit, and
- West Material Storage Area (WMSA).

The inspection noted that previous deficiencies around Pond 30, had been remedied and were adequately addressed. The silt fence installed along the road adjacent Pond 30 was repaired. In

addition, the oil and fuel spills within this area were properly cleaned. Within the quarry, where several slides were observed during the previous inspection, wire backed silt fence was installed on the downhill slope of Rock Crusher Road to address the deficiencies.

BMP's around the topsoil pile in the EMSA are inadequate. The erosion control contractor attempted to repair previously noted deficiencies around the topsoil pile. However, repairs to the noted deficiencies were not made to the California Stormwater Quality Association (CASQA) BMP standard; and thus, inadequate. Specifically, the silt fence around the topsoil pile is only partially keyed in. Erosional gullying was observed in the Yaeger Yard. The County's suggested remedy to minimize additional gullying was to hydroseed the area but because the rainy season has not yet occurred, hydroseeding is still on hold.

New observed deficiencies included silt fences within the EMSA around topsoil piles, within or beyond capacity. Material within silt fences should not accumulate to beyond 50% of the height of the silt fence. During the time of the inspection, silt fences were observed at 60% to 85% of the height of the silt fence. Accumulated material should be removed, or new fencing installed.

The September inspection occurred during the dry season. No qualifying rain events (>0.25 inches of rain in 24 hours) and no rainfall of any amount was recorded.

WRA will continue to perform monthly site inspections to ensure that any deficiencies that develop in existing erosion control materials are addressed and fixed in a timely manner.

Memorandum

To: Manjunath Shivalingappa, Lehigh Hanson
CC: Erika Guerra, Lehigh Hanson

From: Nick Brinton
brinton@wra-ca.com
ext. 1780

Date: November 7, 2018
Subject: Permanente Quarry – October 2018 Erosion Control Inspection

Per COA 78 of the Final Conditions of Approval (COA), the Mine Operator shall:

> "…regularly inspect all stormwater and erosion controls, especially before and following qualifying rain events. Inspections shall be documented and periodically reported. Any violations shall be corrected immediately." And
>
> "Ensure that all stormwater, erosion, and sediment control BMPs are installed, inspected, maintained, and repaired under the direction of either a California certified engineer, geologist, or landscape architect, a registered professional hydrologist, or a certified erosion control specialist."

WRA has been actively inspecting stormwater, erosion, and sediment control BMPs in the RPA. WRA reports monthly on the inspections of the various BMP's which include:

- Check dams on the haul roads.
- Erosion control blankets (i.e. jute netting), straw wattles, and silt fence installations.
- Berms around where stockpiles are placed.
- Sedimentation and stormwater collection ponds.
- Water conveyance berms and ditches.

During the month of October 2018, David Zwick, WRA's QSD conducted one monthly COA site inspection at Permanente Quarry. The monthly COA inspection occurred on October 29, 2018 near the end of the month to assure that no unforeseen rain events occurred that may affect results of the inspection. Areas within the Lehigh Permanente Quarry inspected during WRA's site visit included:

- All PCRA Subareas up to Pond 13,
- the East Materials Storage Area (EMSA),
- Quarry Pit, and
- West Material Storage Area (WMSA).

Hydroseeding and new BMP's had been installed in two areas since the previous months inspection. Hydroseeding and new BMPs were installed around top soil stockpiles and

unvegetated slopes located within the EMSA and WMSA. All new BMPs were properly applied or installed prior to any rain events.

Previously noted deficiencies are still in need of repair including re-keying in of silt fence, or replacement of filled silt fence around the topsoil pile in the EMSA required to meet the California Stormwater Quality Association (CASQA) BMP standards. The QSD recommends re-keying the silt fence, or replacing filled silt fences before the onset of the seasonal rains.

No qualifying rain events (>0.25 inches of rain in 24 hours) and no rainfall of any amount was recorded in the month of October 2018, therefore no additional pre or post event inspections were required.

As of October 31, 2018, WRA will no longer be performing monthly site inspections for compliance with COA 78 at Permanente Quarry.

January 4, 2019

VIA EMAIL: Manjunath.Shivalingappa@LehighHanson.com

Mr. Manjunath Shivalingappa
Lehigh Southwest Cement Company
24001 Stevens Creek Boulevard
Cupertino, California 95014

Dear Mr. Shivalingappa:

Re: Sediment Control and Best Management Practices (BMPs) Inspections
Lehigh Southwest Cement Company
Cupertino, California

GEI Consultants, Inc. is pleased to submit the November 2018 Sediment Control and BMPs Inspections Report regarding the erosion controls and Best Management Practices (BMPs) at the Lehigh Southwest Cement Company plant in support of condition No. 78 items j and l under the "Hydrology and Water Quality" section of the Final Conditions of Approval from June 7, 2012, which state that the Mine Operator shall:

> "…regularly inspect all storm water and erosion controls, especially before and following qualifying rain events. Inspections shall be documented and periodically reported. Any violations shall be corrected immediately." And,
>
> "Ensure that all storm water, erosion, and sediment control BMPs are installed, inspected, maintained, and repaired under the direction of either a California certified engineer, geologist, or landscape architect, a registered professional hydrologist, or a certified erosion control specialist."

GEI Consultants, Inc. inspected the existing erosion control and BMPs at the Lehigh Southwest Cement Company plant before and after the qualifying rain event in November. A qualifying rain event is defined as "any event that produces 0.5 inches of precipitation or more with a 48-hour or greater period between rain events." (Construction General Permit, 2009-0009-DWQ).

The Lehigh Cement Quarry weather station gauge logged a cumulative measurement of 1.9 inches of rain between November 21 and November 24, 2018 resulting in a qualifying event. During the month of November, approximately 4 inches of rain were measured at the quarry's gauge. GEI Consultants performed two field inspections at Lehigh Cement Quarry in November:

November 16, 2018: Monthly Inspection Report

- November Monthly Inspection and Pre-Rain Event Inspection

November 27, 2018: Post-rain Event Inspection Report

- Post-Rain Event Inspection for the November 21 through November 24 rain event.

During these inspections, the BMPs onsite were observed and evaluated for performance. A summary of the inspection observations and deficiencies observed during the inspections can be found in the attached Daily Field Reports (DFRs). The attached Site Map depicts the location where deficiencies were observed.

BMP Deficiencies and Recommendations

The BMP deficiencies observed during the November 2018 inspections are listed on Table 1 below and were assigned a "WORK NEEDED" status in the DFRs.

Table 1. BMP Inspection Overview of Deficient Areas

BMP Deficiency No.	Inspection Date	Repairs Completed by Inspection Date	Location	DFR Photo ID	Status	Recommendations and Comments
1	11/16/18	Repairs scheduled for December. Not completed in November	Quarry Haul Road Between Pond 13 and UTS	1116_01 1116_02	WORK NEEDED	Repair silt fence.

Review attached DFRs and Site Maps for photos and specific locations

During the November 27 post-rain-event inspection, the BMPs throughout the site remained in place with no immediate need for repairs. The location of BMPs' deficiencies identified on November 16 with a status of "WORK NEEDED" were given a status of "MONITOR FOR CHANGES" in the November 27 DFR since the repairs were scheduled to take place in December.

Deterioration of silt fences, especially following rain events, can lead to gaps in the fence alignment and coverage. We recommend that Lehigh Southwest Cement Company staff regularly monitor the silt fences and other BMPs identified in the DFRs with a status of "MONITOR FOR CHANGES" since these BMPs are vulnerable to sedimentation and storm water flows during rain events and their performance may become compromised.

Table 1 and the recommendations hereby included are intended to be used by Lehigh staff to monitor the performance of and address the recommended corrective actions to the BMPs.

If you have any questions, please feel free to contact Hugo Velasquez at 510-350-2905 or Faith Moore at 510-350-2921.

Sincerely,

Faith Moore
Staff Engineer

Hugo Velasquez, P.E., QSD/QSP
Quality Control Engineer

GEI CONSULTANTS, INC.

cc: Mrs. Cindy Davis, Ms. Faith Moore, Mr. Chris Kissick, and Mr. Matt Powers.

\\OAK1V-FS01\Data\Projects\180433-6 LH Permanente BMP Inspections\5.0 Report Originals\Draft Reports\1.0 November\1.0 Draft Cover Letters\November_Final_Cover_Letter.docx

Site Map

SITE PLAN

November 2018 Inspections

GEI Consultants

Daily Inspection Reports

GEI Consultants

MONTHLY INSPECTION REPORT

PROJECT: Lehigh Permanente Quarry: Inspection of Sediment Control and BMPs
Location: Cupertino, California **DATE:** November 16, 2018

GEI PROJECT # 1804336
OWNER: Lehigh Southwest Cement Co.
CLIENT: Lehigh Southwest Cement Co.
OBSERVATIONS REPORTED TO: Manjunath Shivalingappa
DAILY FIELD REPORT NO.: 1
GEI PROJECT MANAGER: Cindy Davis
REVIEWED BY: Chong Vang
DATE REVIEWED: 12/11/2018

ENGINEER/GEOLOGIST: F. Moore/ H. Velasquez
DAY OF WEEK: Friday
TIME ARRVIED: 8:30
TIME DEPARTED: 3:00
TRAVEL TIME (hours): 2.5
TOTAL TIME (hours): 9
TEMPERATURE: 60s **AM** 70s **PM**
WEATHER: ☐ Clear ☐ Rain ☒ Overcast ☐ Fog ☐ Wind ☐ Other: Smoky

ATTACHMENTS: ☒ Site Map ☐ Field Sketches ☐ Other(s) _____

Staff on site:	Organization:
Manjunath Shivalingappa	Lehigh Southwest Cement
Chong Vang	GEI Consultants
Faith Moore	GEI Consultants
Hugo Velasquez	GEI Consultants

Task Overview:

GEI is on-site to conduct the inspection of storm water and sediment control measures, and BMPs of active and inactive reclamation areas within the Reclamation Plan Amendment (RPA) boundary at the Lehigh Permanente Quarry. Within the RPA boundary, the Permanente Creek Reclamation Area (PCRA) is divided into 7 sub-areas identified as PCRA 1 through 7 on the site plan. Sediment control improvements and BMPs are located throughout the quarry, and at each of the PCRAs.

Inspection Summary:

The GEI team composed of Chong Vang, Faith Moore, and Hugo Velasquez arrived onsite and attended a safety meeting and introduction to the Lehigh Cement plant at the main office. The safety meeting was conducted by Manjunath Shivalingappa, environmental engineer at the plant.

Mr. Shivalingappa escorted the GEI team around the Lehigh cement plant and quarry facilities throughout the day for the inspection of the erosion controls and BMPs including those at each of the 7 PCRA sub-areas.

The BMPs in the area of Pond 30 and the Former Aluminum Plant were inaccessible by car at the time of inspection and were only observed from the vicinity of the East Material Storage Area (EMSA).

The appended photo log presents a summary of our observations during the inspection on November 16, 2018. The photo log provides a description for each photo which includes the BMPs' inspection status, location, associated PCRA, observations made during the inspection, recommendations for improvements and repairs, and supplementary notes.

Signature: _____

MONTHLY INSPECTION REPORT

PROJECT: Lehigh Permanente Quarry: Inspection of Sediment Control and BMPs
Location: Cupertino, California **DATE:** **November 16, 2018**

PHOTO ID	DESCRIPTION	PHOTO
1116_01 IMG_5149.JPG	**Status:** **WORK NEEDED** **Location**: Quarry Haul Road from Pond 13 to UTS **PCRA: 6 and 7** **Observations:** Pipelines along Haul Road appear to have affected the silt fence alignment down slope. **Recommendations:** Repair silt fence. **Notes:** N/A	
1116_02 IMG_5153.JPG	**Status:** **WORK NEEDED** **Location**: Quarry Haul Road from Pond 13 to UTS **PCRA:** 5 and 6 **Observations:** Pipelines along Haul Road appear to have affected the silt fence alignment down slope. **Recommendations:** Repair the silt fence. **Note:** N/A	
1116_03 IMG_5156.JPG	**Status:** **MONITOR FOR CHANGES** **Location**: Quarry Haul Road from Pond 13 to UTS **PCRA:** 5 and 6 **Observations:** Erosion potential of berm materials in the vicinity of the pipelines. **Recommendations:** Check slope following rain events to confirm that vegetation remains in place to mitigate potential erosion. **Note:** N/A	

Signature: _____

MONTHLY INSPECTION REPORT

PROJECT: Lehigh Permanente Quarry: Inspection of Sediment Control and BMPs
Location: Cupertino, California **DATE:** **November 16, 2018**

1116_04 IMG_5159.JPG	**Status:** **MONITOR FOR CHANGES** **Location**: Quarry Haul Road from Pond 13 to UTS **PCRA:** 5 and 6 **Observations:** Pipelines affect vegetation along Haul Road visibly eroding slope. **Recommendations:** Check slope following rain events to confirm that vegetation remains in place to mitigate potential erosion. **Note:** N/A	
1116_05 IMG_5166.JPG	**Status:** **MONITOR FOR CHANGES** **Location**: UTS **PCRA:** 5 **Observations:** No deficiencies or signs of distress. **Recommendations:** None at this time. **Note:** N/A	
1116_06 IMG_5182.JPG	**Status:** **GOOD** **Location**: West Material Storage Yard (WMSA) – South **PCRA:** 1 and 2 **Observations:** Silt fences appear to be in good condition. **Recommendations:** None at this time. **Note:** N/A	

Signature: _____

MONTHLY INSPECTION REPORT

PROJECT: Lehigh Permanente Quarry: Inspection of Sediment Control and BMPs
Location: Cupertino, California **DATE:** **November 16, 2018**

1116_07 IMG_5157.JPG	**Status:** **MONITOR FOR CHANGES** **Location**: WMSA/Yeager Yard **PCRA:** 3 **Observations:** Recently hydroseeded covering exposed areas to reduce potential erosion and stabilize slope. Surface cracking noted. **Recommendations:** None at this time. **Note:** Monitor for gully erosion on the benches and slopes, where surface cracks exist, that may affect the hydroseed cover and silt fence alignment.	
1116_08 IMG_5185.JPG	**Status:** **MONITOR FOR CHANGES** **Location**: Clay Dome/EMSA Road **Observations:** Check dams and water bars appear to be in good condition. **Recommendations:** Monitor performance during and after storm events. **Note:** Additional check dams and/or ditches may be required.	
1116_09 IMG_5186.JPG	**Status:** **GOOD** **Location**: East Material Storage Area (EMSA) **PCRA:** N/A **Observations:** Silt fences appear to be in good condition. **Recommendations:** None at this time. **Note:** N/A	

Signature: _____

MONTHLY INSPECTION REPORT

PROJECT: Lehigh Permanente Quarry: Inspection of Sediment Control and BMPs
Location: Cupertino, California **DATE:** **November 16, 2018**

1116_10 IMG_5191.JPG	**Status:** **GOOD** **Location**: Upper EMSA **PCRA:** N/A **Observations:** Drainage protected efficiently; Straw wattles in place to protect from accumulating sediment. **Recommendations:** None at this time. **Note:** N/A	
1116_11 IMG_5185.JPG	**Status:** **MONITOR FOR CHANGES** **Location**: Upper EMSA **PCRA:** N/A **Observations:** Hydroseeded and still fences installed are in good condition. Check dams in place at the base of slope along the road appear in good condition. **Recommendations:** Monitor hydroseed cover and sediment in check dams. **Note:** N/A	
1116_12 IMG_5186.JPG	**Status:** **MONITOR FOR CHANGES** **Location**: Lower slope of EMSA **PCRA:** N/A **Observations:** Silt fences appeared in good condition. **Recommendations:** None at this time. **Note:** Access to area was blocked by cars in roadway.	

Signature: _____

MONTHLY INSPECTION REPORT

PROJECT: Lehigh Permanente Quarry: Inspection of Sediment Control and BMPs
Location: Cupertino, California **DATE:** **November 16, 2018**

1116_13 IMG_5182.JPG	**Status:** **MONITOR FOR CHANGES** **Location**: Rock Plant- Improved existing access road **PCRA:** N/A **Observations:** Check dams appear to be clear of debris and maintained. **Recommendations:** None at this time. **Note:** N/A	
1116_14 IMG_5205.JPG	**Status:** **GOOD** **Location**: Rock Plant- Improved existing access road **PCRA:** N/A **Observations:** Sedimentation basin appears to be maintained: unobstructed and clear of debris. **Recommendations:** None at this time. **Note:** Check dams and water bars report flows into the sedimentation basin.	

Signature: _____

POST-RAIN EVENT INSPECTION REPORT

PROJECT: Lehigh Permanente Quarry: Inspection of Sediment Control and BMPs
Location: Cupertino, California **DATE:** November 27, 2018

GEI PROJECT # 1804336
OWNER: Lehigh Southwest Cement Co.
CLIENT: Lehigh Southwest Cement Co.
OBSERVATIONS REPORTED TO: Manjunath Shivalingappa
DAILY FIELD REPORT NO.: 1
GEI PROJECT MANAGER: Cindy Davis
REVIEWED BY: Chong Vang
DATE REVIEWED: 12/13/2018

ENGINEER/GEOLOGIST: H. Velasquez
DAY OF WEEK: Friday
TIME ARRVIED: 9:00
TIME DEPARTED: 1:30
TRAVEL TIME (hours): 2.5
TOTAL TIME (hours): 7.0
TEMPERATURE: 50s **AM** 70s **PM**
WEATHER: ☐ Clear ☐ Rain ☒ Overcast ☐ Fog ☐ Wind ☐ Other: Smoky

ATTACHMENTS: ☒ Site Map ☐ Field Sketches ☐ Other(s) _____

Staff on site:	Organization:
Manjunath Shivalingappa	Lehigh Southwest Cement
Hugo Velasquez	GEI Consultants

Task Overview:

GEI is on-site to conduct the post-rain inspection of storm water and sediment control measures, and BMPs of active and inactive reclamation areas within the Reclamation Plan Amendment (RPA) boundary at the Lehigh Permanente Quarry. The Lehigh Cement Quarry weather station gauge logged a cumulative measurement of 1.9 inches of rain between November 21 and November 24, 2018. No rain was logged on November 25 through 26 and, as a result, the rain measurement of over 0.5", followed by over 48 hours of no rain, registered as a qualifying rain event. A small amount of rain was logged on November 27 following GEI's time on-site.

Inspection Summary:

The main observations from the November 27 inspection of sediment controls and BMPs at the Lehigh Cement Quarry are as follows:

- Check dams in place on service roads at EMSA and Rock Plant service road are capturing sediment.
- Some water bars on the Rock Plant service road washed away and were to be replaced.
- Hydroseeding near Rock Plant- Improved existing access road is holding in place.
- Monitoring of the silt fences in PCRA sub-area 1 past WSMA is recommended, and as-needed realignment of shifts in the fence alignment to close any gaps that develop.
- Monitoring of the silt fence in the lower slopes of the EMSA is recommended since gaps can develop when the alignment of the silt fence shifts.
- The condition of the sedimentation basin should be monitored, in particular when water bars and other velocity-reducing BMPs wash away increasing the potential for erosion and sediment flowing into the basin.
- Monitor the condition of the condition of the fiber rolls and hay bales at Pond 9, particularly the sediment level behind and the integrity of the wrapping mesh.

The appended photo log presents a summary of our observations during the inspection on November 27, 2018. The photo log provides a description for each photo which includes the BMPs' inspection status, location, associated PCRA, observations made during the inspection, recommendations for improvements and repairs, and supplementary notes.

Signature: _____

POST-RAIN EVENT INSPECTION REPORT

PROJECT: Lehigh Permanente Quarry: Inspection of Sediment Control and BMPs
Location: Cupertino, California **DATE:** **November 27, 2018**

PHOTO ID	DESCRIPTION	PHOTO
1127_01 PB260197.JPG	**Status:** **GOOD** **Location**: Rock Plant- Improved existing access road **PCRA:** N/A **Observations:** Check dams in place are working. **Recommendations:** None at this time. **Notes:** N/A	
1127_02 PB260204.JPG	**Status:** **MONITOR FOR CHANGES** **Location**: Rock Plant- Improved existing access road **PCRA:** N/A **Observations:** Sedimentation basin is clear of large sediment and other obstructions. **Recommendations:** None at this time. **Note:** N/A	
1127_03 PB260205.JPG	**Status:** **MONITOR FOR CHANGES** **Location**: Quarry Haul Road from Pond 13 to UTS **PCRA:** 6 and 7 **Observations:** Pipelines along Haul Road appear to have affected the silt fence alignment down slope. **Recommendations:** Repair silt fence. **Note:** N/A	

Signature: _____

POST-RAIN EVENT INSPECTION REPORT

PROJECT: Lehigh Permanente Quarry: Inspection of Sediment Control and BMPs
Location: Cupertino, California **DATE:** **November 27, 2018**

1127_04 PB260207.JPG	**Status:** **MONITOR FOR CHANGES** **Location**: Quarry Haul Road from Pond 13 to UTS **PCRA:** 5 and 6 **Observations:** Erosion potential of berm materials near the pipelines. **Recommendations:** Check slope following rain events to confirm that vegetation remains in place to mitigate potential erosion. **Note:** N/A	
1127_05 PB260212.JPG	**Status:** **MONITOR FOR CHANGES** **Location**: Upper Treatment System (UTS) vicinity **PCRA:** 5 **Observations:** Silt fences are in place and continuous. **Recommendations:** None at this time. **Note:** N/A	
1127_06 PB260217.JPG	**Status:** **MONITOR FOR CHANGES** **Location**: WMSA/ Yeager Yard **PCRA:** 3 **Observations:** No deficiencies in the silt fencing or hydroseeding. **Recommendations:** Monitor hydroseeding cover after rain events. **Note:** monitor for gully erosion on the benches and slopes where surface cracks exists, that may affect the hydroseed cover and silt fence alignment.	

Signature: _____

POST-RAIN EVENT INSPECTION REPORT

PROJECT: Lehigh Permanente Quarry: Inspection of Sediment Control and BMPs
Location: Cupertino, California **DATE:** **November 27, 2018**

1127_07 PB260225.JPG	**Status:** **MONITOR FOR CHANGES** **Location**: Service road by WMSA **PCRA:** 1 **Observations:** Silt fences appeared in good condition although 2 gaps in the silt fence were observed **Recommendations:** Monitor the condition of the silt fence after rains. Realign or replace silt fence segment when gaps develop. **Note:** N/A	
1127_08 PB260217.JPG	**Status:** **MONITOR FOR CHANGES** **Location**: WMSA **PCRA:** N/A **Observations:** Water bars are in place and check dams appear to be working properly. **Recommendations:** None at this time. **Note:** Water bars may wash away. Monitor after rains.	
1127_09 PB260252.JPG	**Status:** **GOOD** **Location**: Rock Plant road to Pond 13 **PCRA:** N/A **Observations:** Check dams are in place and appear to be working. **Recommendations:** None at this time. **Note:** N/A	

Signature: _____

POST-RAIN EVENT INSPECTION REPORT

PROJECT: Lehigh Permanente Quarry: Inspection of Sediment Control and BMPs
Location: Cupertino, California **DATE:** **November 27, 2018**

1127_10 PB260253.JPG	**Status:** **MONITOR FOR CHANGES** **Location**: EMSA **PCRA:** N/A **Observations:** Silt fences appeared in good condition. Gap is developing. **Recommendations:** Monitor the condition of the silt fence after rains. Realign or replace silt fence segment when gaps develop. **Note:** N/A	
1127_11 PB260254.JPG	**Status:** **MONITOR FOR CHANGES** **Location**: EMSA lower hydroseeded slope **PCRA:** N/A **Observations:** Hydroseeded slope showed good cover and no gaps. **Recommendations:** Monitor hydroseed cover over slope after rains. **Note:** N/A	
1127_12 PB260256.JPG	**Status:** **MONITOR FOR CHANGES** **Location**: EMSA **PCRA:** N/A **Observations:** Silt fences appeared in good condition. Gap is developing. **Recommendations:** Monitor the condition of the silt fence after rains. Realign or replace silt fence segment when gaps develop. **Note:** N/A	

Signature: _____

POST-RAIN EVENT INSPECTION REPORT

PROJECT: Lehigh Permanente Quarry: Inspection of Sediment Control and BMPs
Location: Cupertino, California **DATE:** **November 27, 2018**

1127_13	**Status:** **MONITOR FOR CHANGES** **Location**: Pond 9 **PCRA:** N/A **Observations:** Fiber rolls appear contiguous and in okay shape. Sediment was retained behind fiber rolls. **Recommendations:** Monitor integrity of fiber rolls and sediment retained behind. Check for contiguous linear coverage. **Note:** Deterioration may require replacement of fiber rolls. Monitor integrity of fiber rolls.	
1127_14	**Status:** **MONITOR FOR CHANGES** **Location**: Pond 9 **PCRA:** N/A **Observations:** Hay bales appeared continuous as they paralleled the road and in good condition. **Recommendations:** Monitor and clear the sediment behind the hay bales regularly, particularly after rain events. **Note:** Deterioration may require replacement of the hay bales. Monitor integrity of the hay bales.	

Signature: _____

January 29, 2019

VIA EMAIL: Manjunath.Shivalingappa@LehighHanson.com

Mr. Manjunath Shivalingappa
Lehigh Southwest Cement Company–Permanente Plant
24001 Stevens Creek Boulevard
Cupertino, California 95014

Dear Mr. Shivalingappa:

Re: Erosion and Sediment Control Best Management Practices (BMPs) Inspections December 2018 Monthly Report
Lehigh Southwest Cement Company–Permanente Plant
Cupertino, California

GEI Consultants, Inc. is pleased to submit the December 2018 Erosion and Sediment Control Best Management Practices (BMPs) Inspections Report regarding the implementation of BMPs at the Lehigh Southwest Cement Company plant in support of condition No. 78 items j and l under the "Hydrology and Water Quality" section of the Final Conditions of Approval from June 7, 2012, which state that the Mine Operator shall:

> "…regularly inspect all storm water and erosion controls, especially before and following qualifying rain events. Inspections shall be documented and periodically reported. Any violations shall be corrected immediately." And,
>
> "Ensure that all storm water, erosion, and sediment control BMPs are installed, inspected, maintained, and repaired under the direction of either a California certified engineer, geologist, or landscape architect, a registered professional hydrologist, or a certified erosion control specialist."

GEI Consultants, Inc. inspected the existing erosion and sediment control BMPs at the Lehigh Southwest Cement Company plant before and after the qualifying rain events in December. A qualifying rain event is defined as "any event that produces 0.5 inches of precipitation or more with a 48-hour or greater period between rain events." (Construction General Permit, 2009-0009-DWQ).

The Lehigh Cement Quarry weather station gauge logged a cumulative measurement of 2.14 inches of rain between December 1 and December 25, 2018 that constituted a total of three (3) qualifying events. GEI Consultants performed two field inspections at Lehigh Cement Quarry in December:

December 6, 2018: Post-rain Event Inspection Report

- Qualifying Rain Event from December 4 to December 6, 2018: 0.55 inches
- *Month-to-date Cumulative Rain as of December 6, 2018*: 0.79 inches

December 28, 2018: Post-rain Event Inspection Report

- Qualifying Rain Event from December 16 to December 17, 2018: 0.80 inches
- Qualifying Rain Event from December 24 to December 25, 2018: 0.53 inches
- *Month-to-date Cumulative Rain as of December 28, 2018*: 2.14 inches

As part of these inspections, the BMPs onsite were observed and evaluated for performance. A summary of the inspection findings, BMPs' deficiencies, and recommendations based on the observations from the inspections can be found in the attached Daily Field Reports (DFRs). A Site Map detailing the locations where deficiencies were observed is appended to this report.

BMPs Deficiencies and Recommendations

Based on the observations from the December 2018 inspections, BMPs at the Lehigh SW Co. Permanente Plant are generally in good condition. BMPs identified as deficient in certain locations were assigned a status of "Work Needed" in the respective Daily Field Report (DFR). All recommended repairs to address the BMPs' deficiencies identified during the December 2018 inspections have been addressed and repairs completed.

Deficiencies in BMPs that were assigned a status of "Work Needed" within either of the two December 2018 Daily Field Reports (DFR) are tracked in Table 1 below. One BMPs deficiency identified during the November 2018 inspections is also included in Table 1 as repairs were completed in December 2018. Table 1 presents a brief summary of the locations, status, and recommendations for areas where deficiencies in the implementation of erosion and sediment control measures and implementation of BMPs were identified.

Table 1. BMPs Inspection Overview of Deficient Areas[1]

BMPs Deficiency No.	Inspection Date	Repairs Completed by Inspection Date	DFR Photo ID	Location	Status	Recommendations and Comments
1	11/16/18	12/28/2018	1116_01 1116_02	Quarry Haul Road Between PCRA 6/7	Monitor for Changes[2]	Silt fence repaired – See 12/28/2018 DFR photos
2	12/06/2018	12/28/2018	1206_06 1206_07 1206_08	Rock Plant – Improved Existing Access Road	Good[2]	Drainage path should be cleared from obstructions – See 12/28/2018 DFR for repairs
3	12/06/2018	12/28/2018	1206_12	Lower EMSA	Good[2]	Jute Matting and Straw Wattles need Repair – See 12/28/2018 DFR for repairs
4	12/28/2018	Repairs documented by Lehigh in photos via 1/3/2018 e-mail.[3]	1228_19	Quarry Haul Road Between PCRA 6/7	Good[2]	Stockpile along haul road failing towards cliff side – Email on 1/3/2018 indicate stockpile has been moved.

BMPs Deficiency No.	Inspection Date	Repairs Completed by Inspection Date	DFR Photo ID	Location	Status	Recommendations and Comments
5	12/28/2018	Repairs documented by Lehigh in photos via 1/3/2018 e-mail.[3]	1228_21	Quarry Haul Road Between PCRA 6/7	Good[2]	Dead tree removed – Email on 1/3/2018 indicates that dead tree has been removed.
6	12/28/2018	Repairs documented by Lehigh in photos via 1/3/2018 e-mail.[3]	1228_25	Road from Clay Dome towards EMSA	Good[2]	Stockpile failing – Email on 1/3/2018 indicate stockpile has been moved.

[1] Review attached DFRs and Site Maps for photos and specific locations
[2] BMPs deficiency has been addressed and repairs completed. Deficiency will be removed from Table 1 on the January 2019 report.
[3] GEI to corroborate repairs during January 2019 inspection.

The status column in Table 1 reflects the most recent status identified during the December 2018 inspections by GEI; that is, if repairs were completed during December, the "Work Needed" status has been superseded by a "Monitor for Changes" or "Good" status. Once repairs are completed and reported by GEI regarding a particular BMPs deficiency, the deficiency is removed from the subsequent reports—in this case, no deficiencies from December 2018 will be included in the January 2019 report as all deficiencies were addressed and repairs completed.

No deficiencies with a status of "Work Needed" remained at the end of December; although, GEI is to corroborate the completion of repairs during the next inspection in January since the repairs were documented via e-mail by Lehigh staff.

We recommend that Lehigh Southwest Cement Company staff monitor the silt fences and other BMPs assigned a status of "MONITOR FOR CHANGES" regularly since these BMPs are vulnerable to sedimentation and storm water flows during rain events and their performance may become compromised.

Table 1 and the recommendations hereby included are intended to be used by Lehigh staff to monitor the condition and performance of erosion and sediment control BMPs, and to address the recommended corrective actions to the BMPs deficiencies.

If you have any questions, please feel free to contact Hugo Velasquez at 510-350-2905 or Faith Moore at 510-350-2921.

Sincerely,

Faith Moore
Staff Engineer

Hugo Velasquez, P.E., QSD/QSP
Quality Control Engineer

GEI CONSULTANTS, INC.

cc: Mrs. Cindy Davis, Mr. Chris Kissick, and Ms. Faith Moore.

Site Map

SITE PLAN

December 2018 Inspections

GEI Consultants

Daily Inspection Reports

GEI Consultants

MONTHLY INSPECTION REPORT

PROJECT: Lehigh Permanente Quarry: Inspection of Erosion and Sediment Control BMPs
Location: Cupertino, California **DATE:** **December 6, 2018**

GEI PROJECT # 1804336
OWNER: Lehigh Southwest Cement Co.
CLIENT: Lehigh Southwest Cement Co.
OBSERVATIONS REPORTED TO: Manjunath Shivalingappa
DAILY FIELD REPORT NO.: 3
GEI PROJECT MANAGER: Cindy Davis
REVIEWED BY: Hugo Velasquez
DATE REVIEWED: 1/4/2018

ENGINEER/GEOLOGIST: F. Moore
DAY OF WEEK: Friday
TIME ARRVIED: 7:00
TIME DEPARTED: 11:45
TRAVEL TIME (hours): 2.5
TOTAL TIME (hours): 7.25
TEMPERATURE: 60s **AM** - **PM**
WEATHER: ☒ Clear ☐ Rain ☐ Overcast ☐ Fog ☐ Wind ☐ Other: ____

ATTACHMENTS: ☒ Site Map ☐ Field Sketches ☐ Other(s) _____

Staff on site:	Organization:
Manjunath Shivalingappa	Lehigh Southwest Cement
Faith Moore	GEI Consultants

Task Overview:

GEI is on-site to conduct the inspection of storm water, erosion, and sediment control measures BMPs at active and inactive reclamation areas within the Reclamation Plan Amendment (RPA) boundary at the Lehigh Permanente Quarry. Within the RPA boundary, the Permanente Creek Reclamation Area (PCRA) is divided into 7 sub-areas identified as PCRA 1 through 7 on the site plan. Erosion and sediment control measures and BMPs are located throughout the quarry, and at each of the PCRAs.

Inspection Summary:

The main observations from the December 6 inspection of erosion and sediment control BMPs at the Lehigh Cement Quarry are as follows:

- Hydroseed appears to be taking hold along the Yaeger Yard.
- The silt fences along the Quarry haul Road (PCRA 4 through 7) need to be continually monitored to confirm the following: Silt fences remain in place and functional; sediment is not accumulating excessively behind the silt fences, check dams, sedimentation basins, or drainage swales; pipelines along the Quarry Haul Road are impacting the existing silt fences, nearby vegetation, or causing erosion of the top of the slope that extends to Permanente Creek; existing vegetation is maintained.
    - Ecological Concerns Inc. (ECI, BMPs contractor) was on site during the inspection to repair the two silt fence locations that were noted as broken during the November site visits.
- It was noted during the November Visits that the access road to the rock plant was recently improved by check dams and drainage paths. During the first rain event of the year it was noted that the new drainage paths accumulated sediment and created obstructions. This problem was noted prior to GEI's visit and was being resolved during the December 6th visit. The drainage path was being improved during GEI's visit to reduce the amount of sediment flow during storm events. The following visit should note if the drainage path has been completed and if the obstruction has been removed.
- The upper East Material Storage Area (EMSA) and Pond 30 were visited for the first time during the December 6th visit. It was noted that Pond 30 is protected from sediment due to runoff by a rock berm and silt fence surrounding the Pond.
- The one deficiency noted was the jute matting and straw wattles surrounding Pond 30 and the French drain conveyance system in the EMSA. The BMP's should be replaced before the following rain event.

Signature: Faith Moore

MONTHLY INSPECTION REPORT

PROJECT: Lehigh Permanente Quarry: Inspection of Erosion and Sediment Control BMPs
Location: Cupertino, California **DATE:** **December 6, 2018**

PHOTO ID	DESCRIPTION	PHOTO
1206_01	**Status:** **MONITOR FOR CHANGES** **Location**: Yaeger Yard **PCRA: Above PCRA 2 and 3** **Observations:** Hydroseed appears to be taking hold. **Recommendations:** N/A **Notes:** N/A	
1206_02	**Status:** **GOOD** **Location**: Pond 31B (EMSA) **PCRA:** N/A **Observations:** Pond appear to be in good condition. **Recommendations:** N/A **Note:** N/A	
1206_03	**Status:** **MONITOR FOR CHANGES** **Location**: Quarry Haul Road from Pond 13B to UTS **PCRA:** 5 and 6 **Observations:** Pipelines along Haul Road appear unstable and may affect the silt fences downslope. **Recommendations:** Continue monitoring to confirm silt fences are not affected by pipeline. **Note:** N/A	

Signature:

1206_04	**Status:** **MONITOR FOR CHANGES** **Location**: Quarry Haul Road from Pond 13 to UTS **PCRA:** 5 and 6 **Observations:** Erosion potential of berm materials in the vicinity of the pipelines. **Recommendations:** Check slope following rain events to confirm that vegetation remains in place to mitigate potential erosion. **Note:** N/A	
1206_05	**Status:** **MONITOR FOR CHANGES** **Location**: Pond 13B **PCRA:** 6 and 7 **Observations:** Catchment appears to be in working condition. **Recommendations:** Monitor to confirm large debris does not overtop catchment system. **Note:** N/A	
1206_06	**Status:** **WORK NEEDED** **Location**: Rock Plant – Improved Existing Access Road **PCRA:** N/A **Observations:** The improved existing access road towards the Rock Plant experienced erosion from surface flows during the last rain event and sediment filled and obstructed the drainage path through the drop inlet (DI) sediment basin to the discharge location below the rock plant.	

Signature:

	The drainage swale along the improved existing access road was lined with crushed rock. **Recommendations:** Confirm the rock placement along the drainage swale is completed. **Note:** Note the blue arrow indicating flow direction.	
1206_07	**Status:** **WORK NEEDED** **Location**: Rock Plant – Improved Existing Access Road **PCRA:** N/A **Observations:** Drainage flow through the sediment basin is obstructed. **Recommendations:** Clear obstruction at drop inlet sediment basin and discharge pipe. **Note:** See inflow on IMG_5394 and outflow on IMG_5400; blue arrow indicates flow direction.	
1206_08	**Status:** **WORK NEEDED** **Location**: Rock Plant **PCRA:** N/A **Observations:** DI sediment basin discharge pipe is reporting sediment downstream. Due to the accumulation of sediment inside the sediment basin, sediment is bypassing the sediment trap. **Recommendations:** Remove sediment and debris from DI sediment basin and clear flow path through discharge pipe. **Note:** See inflow on Photo 1206_06 and outflow on 1206_08. Blue arrow indicates flow direction.	

Signature:

MONTHLY INSPECTION REPORT

PROJECT: Lehigh Permanente Quarry: Inspection of Erosion and Sediment Control BMPs
Location: Cupertino, California **DATE:** **December 6, 2018**

1206_09	**Status:** **MONITOR FOR CHANGES** **Location**: Pipeline B Inlet **Observations:** Gabions and sediment basin appear to be reducing the amount of sediment that flows into the culvert. **Recommendations:** Monitor performance during and after storm events. **Note:** N/A	
1206_10	**Status:** **GOOD** **Location**: Pond 17 **PCRA:** N/A **Observations:** Settlement basin appears to be functional and clear of debris. **Recommendations:** Monitor condition and sediment accumulation after storm events. **Note:** N/A	
1206_11	**Status:** **GOOD** **Location**: Upper EMSA **PCRA:** N/A **Observations:** Straw wattles appear functional and are set in place as a sediment barrier to protect the storm drain catch basin. **Recommendations:** Monitor sediment accumulation after storm events. **Note:** N/A	

Signature:

MONTHLY INSPECTION REPORT

PROJECT: Lehigh Permanente Quarry: Inspection of Erosion and Sediment Control BMPs
Location: Cupertino, California **DATE:** **December 6, 2018**

1206_12	**Status:** **WORK NEEDED** **Location**: Lower EMSA **PCRA:** N/A **Observations:** Straw wattles and jute matting surrounding the Pond 30 vault and French drain conveyance system show signs of deterioration. **Recommendations:** Pond 30 and French drain conveyance system area needs new straw wattles and jute matting to protect the surface from erosion. **Note:** N/A	
1206_13	**Status:** **GOOD** **Location**: Pond 30 **PCRA:** N/A **Observations:** Rock berms and silt fences appear to be functional as sediment control reporting to Pond 30. **Recommendations:** Monitor sediment accumulation and the condition of silt fences after storm events. **Note: N/A**	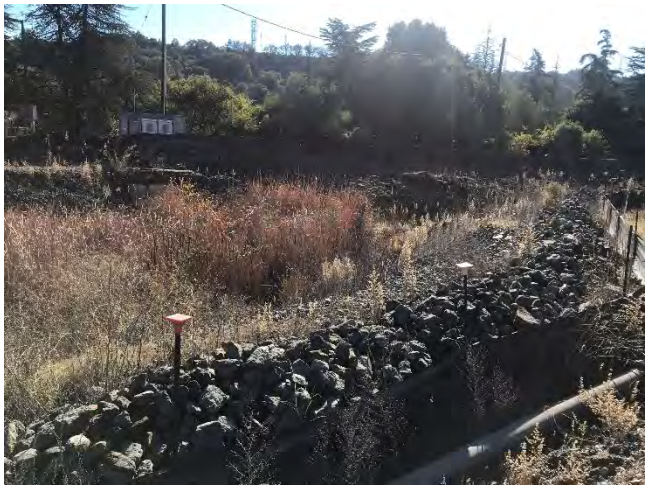

Signature:

GEI Consultants

MONTHLY INSPECTION REPORT

PROJECT: Lehigh Permanente Quarry: Inspection of Erosion and Sediment Control BMPs
Location: Cupertino, California **DATE:** December 28, 2018

GEI PROJECT # 1804336
OWNER: Lehigh Southwest Cement Co.
CLIENT: Lehigh Southwest Cement Co.
OBSERVATIONS REPORTED TO: Manjunath Shivalingappa
DAILY FIELD REPORT NO.: 4
GEI PROJECT MANAGER: Cindy Davis
REVIEWED BY: Hugo Velasquez
DATE REVIEWED: 1/4/2018

ENGINEER/GEOLOGIST: F. Moore
DAY OF WEEK: Friday
TIME ARRVIED: 8:00
TIME DEPARTED: 12:30
TRAVEL TIME (hours): 2.5
TOTAL TIME (hours): 7.0
TEMPERATURE: 60s **AM** ____ **PM**
WEATHER: ☒ Clear ☐ Rain ☐ Overcast ☐ Fog ☐ Wind ☐ Other: ____

ATTACHMENTS: ☒ Site Map ☐ Field Sketches ☐ Other(s) ____

Staff on site:	Organization:
Manjunath Shivalingappa	Lehigh Southwest Cement
Faith Moore	GEI Consultants

Task Overview:

GEI is on-site to conduct the inspection of storm water, erosion and sediment control BMPs at active and inactive reclamation areas within the Reclamation Plan Amendment (RPA) boundary at the Lehigh Permanente Quarry. Within the RPA boundary, the Permanente Creek Reclamation Area (PCRA) is divided into 7 sub-areas identified as PCRA 1 through 7 on the site plan. Erosion and sediment control BMPs are located throughout the quarry and within the PCRAs.

Inspection Summary:

The main observations from the December 28th inspection of erosion and sediment control BMPs at the Lehigh Cement Quarry are as follows:

- Repairs were completed addressing the silt fence deficiency along the Quarry Haul Road identified in the November 2018 report.
- Repairs were completed for all BMP deficiencies identified during the inspection on December 6, 2018.
- The repairs and improvements near the Rock Plant appear to be in working condition and no additional changes are recommended at this time.
- The flow paths surrounding Pond 13B appear to follow their designated paths. There are no recommendations currently regarding the BMPs perimetral to Pond 13B.
- The check dams to Pond 9 were recently cleared of sediment and the BMPs (hay bales and straw wattles) appear to create a continuous line of containment from sediment along the Pond. If the BMPs remain functional and their integrity is not compromised through rupture or clogging, it is recommended that the BMPs be replaced at the end of the rainy season. We recommend that the integrity of these BMPs be regularly monitored.
- From the inspection of BMPs at the Quarry Haul Road:
  - The November Monthly Report noted two locations along PCRA 6 and 7 that required the silt fences to be repaired. As noted in this DFR, a new line of silt fences was installed below each of the deficient locations.
  - Rock stockpile was placed along the road above PCRA 6/7. This stockpile has breached the roadside berm and material has mobilized downslope and is beginning to pile behind the silt fences. It has been recommended that the stockpile either be moved or regraded at shallower, more stable slopes and the roadside berm re-established.
- The stockpile across from Clay Dome to EMSA is beginning to fail. We recommend that the stock pile either be moved or regraded at shallower, more stable slopes.
- The silt fences in the lower EMSA were repaired to close any gaps in coverage.
- The jute matting and straw wattles were replaced in the lower EMSA near Pond 30 and the French drain conveyance system at the EMSA.

Signature: Faith Moore

MONTHLY INSPECTION REPORT

PROJECT: Lehigh Permanente Quarry: Inspection of Erosion and Sediment Control BMPs
Location: Cupertino, California **DATE:** **December 28, 2018**

PHOTO ID	DESCRIPTION	PHOTO
1228_01	**Status: GOOD** **Location**: Rock Plant – Improved Existing Access Road **PCRA:** N/A **Observations:** Drainage swale along the improved existing access road towards the Rock Plant has been completed. The rock lining appears to be reducing the erosion and sediment reporting to the drop inlet sediment basin (Photo 1228_03). **Recommendations:** Monitor sediment accumulation and place additional rock as necessary after storm events. **Note:** Note the blue arrow indicating flow direction.	
1228_02	**Status: GOOD** **Location**: Rock Plant – Improved Existing Access Road **PCRA:** N/A **Observations:** Water bars were recently improved to direct water towards rock lined drainage swale (1228_01). **Recommendations:** Monitor condition after storm events and re-establish water bars as necessary. **Note:** N/A	
1228_03	**Status: GOOD** **Location**: Rock Plant – Improved Existing Access Road **PCRA:** N/A **Observations:** Screen was recently placed on the entrance to the DI basin to reduce sediment and debris accumulation in the basin. **Recommendations:** Monitor debris and sediment accumulation after storm events. **Note:** Drainage swale on photo 1228_01 discharges into the DI basin. Basin outfall is shown on photo 1228_05.	

Signature:

1228_04	**Status: MONITOR FOR CHANGES** **Location**: Rock Plant – Improved Existing Access Road **PCRA:** N/A **Observations:** The DI basin discharge pipe was completely obstructed during the December 6th visit and is now partially unobstructed. **Recommendations:** The pipe is roughly 50% open, it should be monitored before and after every rain event to confirm that outflow is unobstructed. Sediment should be cleared below discharge pipe invert. **Note:** Drainage swale on photo 1228_01 discharges into the DI basin. Basin outfall is shown on photo 1228_05.	
1228_05	**Status: MONITOR FOR CHANGES** **Location**: Rock Plant **PCRA:** N/A **Observations:** DI basin discharge pipe is sedimented and partially obstructed. **Recommendations:** The pipe is roughly 50% open, it should be monitored before and after every rain event to confirm that outflow is unobstructed. Sediment should be cleared below discharge pipe invert. **Note:** Blue arrow indicates flow direction	
1228_06	**Status: MONITOR FOR CHANGES** **Location**: Rock Plant – Improved Existing Access Road **PCRA:** N/A **Observations:** Check dams along the east side of the improved existing access road to the Rock Plant appear to be retaining sediment effectively. **Recommendations:** Monitor sediment accumulation after rain events and clear sediment behind check dams regularly. **Note:** Note the blue arrow indicating flow direction.	

Signature:

MONTHLY INSPECTION REPORT

PROJECT: Lehigh Permanente Quarry: Inspection of Erosion and Sediment Control BMPs
Location: Cupertino, California **DATE:** **December 28, 2018**

1228_07	**Status: MONITOR FOR CHANGES** **Location**: Rock Plant – Improved Existing Access Road **PCRA:** N/A **Observations:** Flow along the western side of the rock plant road appears to be eroding the road side. **Recommendations:** Additional check dams were discussed during the visit, but it was agreed that this area will be monitored before and after the following rain events to determine if the recently placed BMPs (water bars and riprap swale) reduce flow velocity and erosion potential. **Note:** Note the blue arrow indicating flow direction.	
1228_08	**Status: GOOD** **Location**: Upstream from Pond 13A **PCRA:** 6 and 7 **Observations:** Berm along the Surge Pile and east of Pond 13A are effectively directing the water towards Pond 13A. **Recommendations:** Monitor the condition of the berm and the drainage path after storm events for signs of erosion or obstruction due to sediment and debris. **Note:** N/A	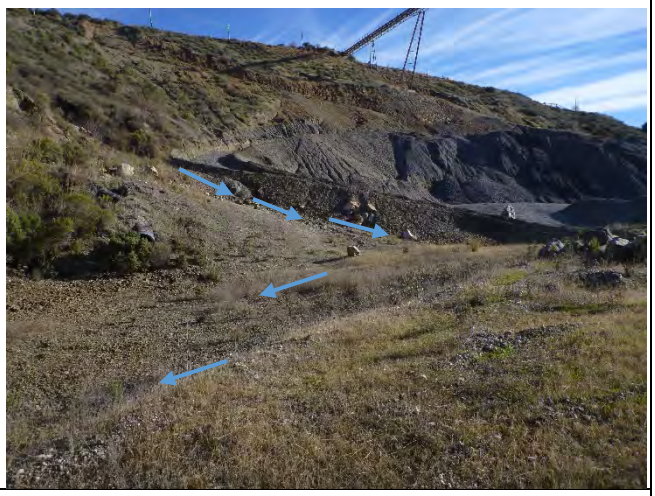
1228_09	**Status: GOOD** **Location**: Adjacent to Pond 13A (upslope and to the East) **PCRA:** 6 and 7 **Observations:** Straw wattles show signs of degradation. Vegetation is present upslope from silt fence and straw wattles. **Recommendations:** Monitor the condition of silt fence and wattles upslope after storm events for excessive sedimentation. **Note:** Existing vegetation is expected to reduce the erosion of soils on the bench, silt fence and wattle may not need to be maintained if vegetation holds.	

Signature:

1228_10	**Status: GOOD** **Location**: Adjacent (East) to Pond 13A; downslope from straw wattles **PCRA:** 6 and 7 **Observations:** Straw wattles show signs of degradation. Vegetation is present upslope from silt fence and straw wattles. **Recommendations:** Monitor performance of silt fence on bench and wattles upslope after storm events for sedimentation and integrity. **Note:** Existing vegetation is expected to reduce the erosion of soils on the bench, silt fence and wattle may not need to be maintained if vegetation holds.	
1228_11	**Status: GOOD** **Location**: Pond 13B **PCRA:** 6 and 7 **Observations:** No evident drainage paths into Pond 13B were apparent. No visible debris in Pond. **Recommendations:** Monitor vegetation in the vicinity of Pond 13B after storm events. **Note:** N/A	
1228_12	**Status: MONITOR FOR CHANGES** **Location**: Pond 13B **PCRA:** 6 and 7 **Observations:** Catchment appears to be effectively catching woody debris. **Recommendations:** Monitor to confirm debris does not overtop catchment system. **Note:** N/A	

Signature:

1228_13	**Status: MONITOR FOR CHANGES** **Location**: Pond 13B **PCRA:** 6 and 7 **Observations:** Flow from Pond 13B discharges to the half-pipe channel through the catchment (Photo 1228_12). Drainage path appears clear of obstruction with some sediment along the invert. **Recommendations:** Monitor to confirm large debris does not overtop catchment system. **Note:** N/A	
1228_14	**Status: GOOD** **Location:** Road below Surge Piles to Rock Plant **PCRA:** N/A **Observations:** Check dams were recently cleared of sediment and appear to be in working condition. **Recommendations:** Monitor sediment accumulation after storm events. **Note:** N/A	
1228_15	**Status: GOOD** **Location:** Road to Pond 9 **PCRA:** N/A **Observations:** Check dams were recently cleared of sediment and appear to be in working condition. **Recommendations:** Monitor sediment accumulation after storm events. **Note:** N/A	

Signature:

1228_16	**Status: MONITOR FOR CHANGES** **Location**: Pond 9 **PCRA:** N/A **Observations:** Hay bales appeared continuous as they paralleled the road and in good condition. **Recommendations:** Monitor and clear the sediment behind the hay bales regularly, particularly after rain events. **Note: N/A**	
1228_17	**Status: GOOD** **Location:** Crusher Hopper **PCRA:** 7 **Observations:** Zone below Crusher Hopper is shotcreted to protect from erosion. **Recommendations:** N/A **Note:** N/A	
1228_18	**Status: GOOD** **Location:** Crusher Hopper **PCRA:** 7 **Observations:** Zone below Crusher Hopper is shotcreted to protect slope from erosion. Jute matting covers the non-vegetated area downslope. Further downslope, silt fences protect Pond 13 from sediment laden discharge. **Recommendations:** Monitor the condition of the jute matting and silt fences after storm events. **Note:** N/A	

Signature:

MONTHLY INSPECTION REPORT

PROJECT: Lehigh Permanente Quarry: Inspection of Erosion and Sediment Control BMPs
Location: Cupertino, California **DATE:** **December 28, 2018**

1228_19	**Status: WORK NEEDED** **Location:** Quarry Haul Road from Pond 13B to UTS **PCRA:** 6 and 7 **Observations:** Recently placed stockpiles along Quarry Haul Road overtopped the roadside berm. Stockpile material mobilized and is present downslope. **Recommendations:** Stockpile should be graded with flatter slopes or relocated. Roadside berm is to be re-established. **Note:** N/A	
1228_20	**Status: GOOD** **Location:** Quarry Haul Road from Pond 13B to UTS **PCRA:** 6 and 7 **Observations:** Silt fence has been added downslope from the berm breach. **Recommendations:** Continue to monitor this area after storm events to ensure no gaps in the silt fence or breaches to the roadside berm. **Note:** See November Monthly report for details on previous deficiency.	
1228_21	**Status: WORK NEEDED** **Location:** Quarry Haul Road from Pond 13B to UTS **PCRA:** 6 and 7 **Observations:** Silt fence has been added downslope from the fallen tree (November Monthly Report). However, the fallen dead tree remains a hazard to the stability of the roadside berm, adjacent slope, and silt fences. **Recommendations:** Dead tree should be removed as it poses a risk to stability. **Note:** See November Monthly report for details on previous deficiency.	

Signature:

1228_22	**Status: GOOD** **Location:** Pond 1250/ UTS **PCRA:** 4 **Observations:** Silt fences below the berm that lines Pond 1250/ UTS appear to be in good condition. **Recommendations:** Monitor the condition of the silt fences and sediment accumulation after storm events. **Note:** N/A	
1228_23	**Status: GOOD** **Location:** WMSA **PCRA:** 1 and 2 **Observations:** The slopes above PCRA 1 and 2 at WMSA appear to be vegetated and erosion protentional reduced. The berm and silt fencing along the one-way road to the west of WMSA are in condition to retain sediment. **Recommendations:** Monitor the vegetative cover and the condition of the silt fences and after storm events. **Note:** Monitor the vegetation on the slope as it is sparse in certain areas and may lead to erosion. Some silt fences downslope may not be safe to access precluding workers from making repairs.	
1228_24	**Status: MONITOR FOR CHANGES** **Location:** Upper EMSA **PCRA:** N/A **Observations:** Hydroseed appears to have taken hold. Sediment from the bench above the monitoring well buried most of the silt fences around the monitoring well at the toe of the slope. The silt fences perimetral to the slope appear functional. **Recommendations:** Monitor sediment accumulation behind silt fences after storm events. **Note:** Consider compaction before placing additional fill on or near this area.	

Signature:

MONTHLY INSPECTION REPORT

PROJECT: Lehigh Permanente Quarry: Inspection of Erosion and Sediment Control BMPs
Location: Cupertino, California **DATE:** **December 28, 2018**

1228_25	**Status: WORK NEEDED** **Location:** Clay Dome to EMSA **PCRA:** N/A **Observations:** Stockpile of rocks has failed and begun to impinge on the adjacent road. **Recommendations:** Remove some of the stockpile and/or regrade at a shallower slope. **Note:** N/A	
1228_26	**Status: GOOD** **Location**: Lower EMSA **PCRA:** N/A **Observations:** Silt fences were repaired where gaps were developing (See November Monthly Report). **Recommendations:** Monitor the condition of the silt fences after rain events. **Note:** Vegetation has taken hold in place on the slope. The mid-slope line of silt fencing may not need to be maintained if vegetation on slope holds with time. We recommend that the silt fence at the base of the slope continue to be maintained.	
1228_27	**Status: GOOD** **Location**: Lower EMSA **PCRA:** N/A **Observations:** Straw wattles and jute matting surrounding the French drain were recently replaced (See December 6th DFR) **Recommendations:** N/A **Note:** N/A	

Signature:

February 7, 2019

VIA EMAIL: Manjunath.Shivalingappa@LehighHanson.com

Mr. Manjunath Shivalingappa
Lehigh Southwest Cement Company–Permanente Plant
24001 Stevens Creek Boulevard
Cupertino, California 95014

Dear Mr. Shivalingappa:

Re: Erosion and Sediment Control Best Management Practices (BMPs) Inspections
January 2019 Monthly Report
Lehigh Southwest Cement Company–Permanente Plant
Cupertino, California

GEI Consultants is pleased to submit the January 2019 Erosion and Sediment Control Best Management Practices (BMPs) Inspection Report regarding the implementation of BMPs at the Lehigh Southwest Cement Company plant in support of condition No. 78 items j and l under the "Hydrology and Water Quality" section of the Final Conditions of Approval from June 7, 2012, which state that the Mine Operator shall:

> "…regularly inspect all storm water and erosion controls, especially before and following qualifying rain events. Inspections shall be documented and periodically reported. Any violations shall be corrected immediately." And,
>
> "Ensure that all storm water, erosion, and sediment control BMPs are installed, inspected, maintained, and repaired under the direction of either a California certified engineer, geologist, or landscape architect, a registered professional hydrologist, or a certified erosion control specialist."

GEI Consultants inspected the existing erosion and sediment control BMPs at the Lehigh Southwest Cement Company plant before and after the qualifying rain events in January. A qualifying rain event is defined as "any event that produces 0.5 inches of precipitation or more with a 48-hour or greater period between rain events" (Construction General Permit, 2009-0009-DWQ).

The Lehigh Cement Quarry weather station logged a cumulative measurement of 7.87 inches of rain between January 1 and January 22 accounting for three qualifying rain events. The total cumulative rainfall logged at the Lehigh Quarry weather station in January is 8.49 inches. GEI Consultants performed one field inspection at the Lehigh Cement Quarry in January:

January 22, 2019: Monthly Inspection and Post-rain Event Inspection Report

- Qualifying Rain Event from January 5 to January 11, 2019: 3.41 inches
- Qualifying Rain Event from January 14 to January 17, 2019: 3.96 inches
- Qualifying Rain Event from January 20 to January 21, 2019: 0.5 inches

As part of this inspection, the BMPs onsite were observed and evaluated for performance. A summary of the inspection findings, BMPs' deficiencies, and recommendations based on the observations from the inspection can be found in the attached Daily Field Report (DFR). A Site Map detailing the location of the BMPs' deficiencies observed is included with this report.

BMPs Deficiencies and Recommendations

Based on the observations from the January 2019 inspection, BMPs at the Lehigh SW Co. Permanente Plant are generally in good condition. BMPs identified as deficient were assigned a status of "Work Needed" in the DFR. All repairs associated with deficiencies from December 2018 had been completed. Recommendations of repairs to address the BMPs' deficiencies and other vulnerabilities identified during the January 2019 inspection are included in the DFR.

Deficiencies in BMPs that were assigned a status of "Work Needed" in the January 2019 monthly inspection DFR are tracked in Table 1 below. Two BMPs' deficiencies were identified during the inspection on January 22. Table 1 presents a brief summary of the location, status, and recommendations for the areas where the deficiencies in the implementation of erosion and sediment control BMPs were identified.

Table 1. BMPs Inspection Overview of Deficient Areas[1]

BMPs Deficiency No.	Inspection Date	Repairs Completed by Inspection Date	DFR Photo ID	Location[1]	Status	Recommendations and Comments
1	01/22/2019	Repairs to be completed	0122_11	EMSA–Upper Slope	Work Needed	New silt fence to be installed and local grading performed to re-establish drainage at the toe of the slope toward the roadside sediment traps in place.
2	01/22/2019	Repairs to be completed	0122_22 0122_23	Rock Plant–Improved Existing Access Road	Work Needed	Clear sediment from drop inlet sediment basin and from the rock apron at the inlet.

[1] Review attached DFR and Site Map for photos and specific locations

We recommend that Lehigh Southwest Cement Company staff monitor the silt fences and other BMPs assigned a status of "MONITOR FOR CHANGES" regularly since these BMPs are vulnerable to sedimentation and storm water flows during rain events and their performance may become compromised.

Table 1 and the recommendations hereby included are intended to be used by Lehigh staff to monitor the condition and performance of erosion and sediment control BMPs, and to address the recommended corrective actions to the BMPs' deficiencies.

If you have any questions, please feel free to contact Hugo Velasquez at (510) 350-2905 or Chris Kissick at (916) 631-4527.

Sincerely,

Hugo Velasquez, P.E., QSP
Project Engineer

Chris Kissick, P.E., QSD/QSP
Quality Control Engineer

GEI CONSULTANTS, INC.

cc: Mrs. Cindy Davis, Mr. Chris Kissick, and Ms. Faith Moore.

Site Map

SITE MAP

January 2019 Inspection

GEI Consultants

Daily Inspection Report

GEI Consultants

MONTHLY AND POST-RAIN-EVENT INSPECTION REPORT

PROJECT: Lehigh Permanente Quarry: Inspection of Erosion and Sediment Control BMPs
Location: Cupertino, California **DATE:** January 22, 2019

GEI PROJECT # 1804336
OWNER: Lehigh Southwest Cement Co.
CLIENT: Lehigh Southwest Cement Co.
OBSERVATIONS REPORTED TO: Manjunath Shivalingappa
DAILY FIELD REPORT NO.: 5
GEI PROJECT MANAGER: Cindy Davis
REVIEWED BY: Chris Kissick
DATE REVIEWED: 02/05/2019

ENGINEER/GEOLOGIST: Hugo Velasquez
DAY OF WEEK: Tuesday
TIME ARRVIED: 7:00
TIME DEPARTED: 11:30
TRAVEL TIME (hours): 2.5
TOTAL TIME (hours): 7.0
TEMPERATURE: 40s-50s **AM** - **PM**
WEATHER: ☒ Clear ☐ Rain ☐ Overcast ☐ Fog ☐ Wind ☐ Other:

ATTACHMENTS: ☒ Site Map ☐ Field Sketches ☐ Other(s)

Staff on site:	Organization:
Manjunath Shivalingappa	Lehigh Southwest Cement
John Morley	Ecological Concerns Incorporated (BMPs Contractor)
Hugo Velasquez	GEI Consultants

Task Overview:

GEI is on-site to conduct the inspection of storm water, erosion, and sediment control BMPs of active and inactive reclamation areas within the Reclamation Plan Amendment (RPA) boundary at the Lehigh Permanente Quarry. Within the RPA boundary, the Permanente Creek Reclamation Area (PCRA) is divided into 7 sub-areas identified as PCRA 1 through 7 on the site map. Erosion and sediment control BMPs are located throughout the quarry and cement plant site, and at each of the PCRAs.

Inspection Summary:

During the inspection on January 22, 2019, the group consisting of Hugo Velasquez (GEI), Manjunath Shivalingappa (Lehigh), and John Morley (ECI, BMPs contractor) walked throughout the Lehigh Quarry and Cement Plant and inspected the condition of the BMPs at the following locations: Quarry Haul Road, Upper Treatment System (UTS), Yeager Yard, West Material Storage Area (WMSA), East Material Storage Area (EMSA), Upper EMSA, Lower EMSA, Pond 13 A, and the Rock Plant – in that order. A selection of photos representative of the condition of BMPs throughout the site, and taken during the January 22 inspection, are appended.

The main observations documented during the January 22, 2019, inspection of erosion and sediment control BMPs at the Lehigh Cement Plant are as follows:

- The drop inlet sediment basin by the improved existing access road at the Rock Plant is full of sediment which is to be cleared at least a foot below the outlet invert.
- BMPs below the roadside berm along the Quarry Haul Road appear in good condition after a line of silt fencing was added and the roadside berm re-established. Consider grading a mid-slope bench on the creekside of the roadside berm because it can reduce sheet flow velocities on the slope, potential erosion, vegetation loss, and sedimentation of the silt fences below – See Photo 0122_03.
- Vegetative cover is taking hold over a large portion of the hydroseeded slopes at the Yeager Yard. Silt fences are capturing the sediment reporting from certain slopes that experienced vegetative cover loss as a result of storm flows. Some silt fences at the Yeager Yard are to be maintained and re-established to close gaps that may further develop during future storms where reinforcing the silt fence to the anchor stakes is necessary.
- Loss of vegetative cover and the resulting erosion generated large amounts of sediment that in some cases overtopped nearby silt fences. The buried silt fence in the upper slope of EMSA should to be replaced and drainage paths re-established to conduct sediment to the silt fences and other roadside sediment traps.
- Other BMPs are to be maintained regularly during the rainy season: (1) check dams and rock-lined drainage ditches are to be cleared of sediment regularly. (2) accumulation of sediment behind silt fences is to be monitored and cleared as necessary after rain events to maintain containment and prevent sediment from overtopping the silt fences. (3) water bars should monitored and re–established when they wash away.

Signature:

GEI Consultants

MONTHLY AND POST-RAIN-EVENT INSPECTION REPORT

PROJECT: Lehigh Permanente Quarry: Inspection of Erosion and Sediment Control BMPs
Location: Cupertino, California **DATE:** **January 22, 2019**

PHOTO ID	DESCRIPTION	PHOTO
0122_01	**Status:** **GOOD** **Location**: Quarry Haul Road – From Pond 13B to UTS **PCRA:** 5 and 6 **Observations:** Silt fence line was installed below existing silt fence for containment of the stockpile material on the creekside slope. **Recommendations:** Monitor sediment and debris accumulation behind silt fences after rain events.	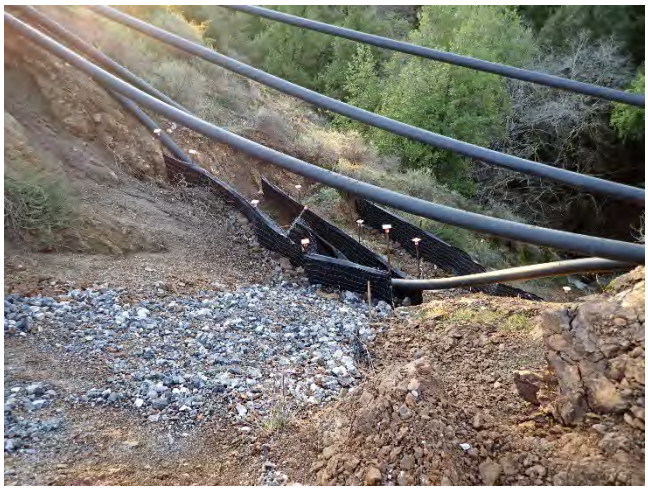
0122_02	**Status:** **GOOD** **Location**: Quarry Haul Road – From Pond 13B to UTS **PCRA:** 5 and 6 **Observations:** Roadside berm was re-established after stockpile overtopped the berm as noted in the December 2018 report. **Recommendations:** Keep stockpiles away from the berm. Monitor berm condition after rain events.	
0122_03	**Status:** **MONITOR FOR CHANGES** **Location**: Quarry Haul Road – From Pond 13 to UTS **PCRA:** 5 and 6 **Observations:** Pipelines along Haul Road are affecting vegetated slope which may impact silt fences below. **Recommendations:** Monitor silt fences to confirm they are not affected by pipeline or large vegetation nearby.	

Signature:

	Consider grading a mid–slope bench, or a shallower slope above the silt fence to reduce erosion potential and the amount of sediment reporting to the silt fence.	
0122_04	**Status:GOOD** **Location**: Yeager Yard **PCRA:** 2 and 3 **Observations:** Vegetation from hydroseeding is taking hold on the upper slopes. Silt fences remain in place. **Recommendations:** Check slope following rain events to confirm that vegetation remains in place to mitigate potential erosion.	
0122_05	**Status:** **MONITOR FOR CHANGES** **Location**: Yeager Yard **PCRA:** 2 and 3 **Observations:** Vegetation from hydroseeding is taking hold on the upper slopes. Lower slopes have lost some of the hydroseed vegetative cover **Recommendations:** Check slope following rain events to confirm that vegetation remains in place. Hydroseeding or silt fence replacement on the lower slope may be unsafe following rain events which result in vegetative cover loss and soil movement.	

Signature:

0122_06	**Status:** **MONITOR FOR CHANGES** **Location**: Yeager Yard **PCRA:** 2 and 3 **Observations:** Vegetation from hydroseeding is taking hold. Silt fences provide secondary containment in case of vegetative cover loss. **Recommendations:** Silt fences are to be re-assembled in case of vegetative cover loss following rain events.	
0122_07	**Status:** **MONITOR FOR CHANGES** **Location**: Yeager Yard **PCRA:** 2 **Observations:** Vegetation from hydroseeding is taking hold, although some vegetative cover loss is evident. Silt fences provide secondary containment in case of vegetative cover loss. **Recommendations:** Monitor vegetative cover and sediment accumulation behind silt fence.	
0122_08	**Status:** **MONITOR FOR CHANGES** **Location**: Yeager Yard **PCRA:** 2 **Observations:** Jute matting remains in place and vegetation is taking hold. Silt fences below provide secondary containment in case of soil or vegetative cover loss. **Recommendations:** Monitor vegetative cover over slope and sediment accumulation behind silt fences.	

Signature:

0122_09	**Status:** **MONITOR FOR CHANGES** **Location**: Yeager Yard **PCRA:** 2 **Observations:** Hydroseeded vegetative cover loss is evident. Silt fences were overtopped by sediment and rain storm flows. Sediment is confined within vegetated bench. **Recommendations:** Re-establish overtopped silt fence and monitor sediment on lower bench.	
0122_10	**Status:** **GOOD** **Location**: WMSA **PCRA:** 1 **Observations:** Silt fences along and below the access road remain in place. Slope below road is partially vegetated. Sediment captured by lower silt fences is minimal. **Recommendations:** Monitor sedimentation behind lower line of silt fences and the silt fence condition after storms.	
0122_11	**Status:** **WORK NEEDED** **Location**: EMSA – Upper Slope **PCRA:** N/A **Observations:** Hydroseeded slope experiences loss of vegetative cover due to the storm. Silt fence below was overtopped by sediment. **Recommendations:** Re-establish silt fence line below hydroseeded slope and regrade loose soil at the base of the slope to drain towards adjacent drainage ditch.	

Signature:

0122_12	**Status:** **GOOD** **Location**: EMSA – Road **PCRA:** N/A **Observations:** Drainage ditch and rock protection remain operational: sediment is being captured. Water bars are in place. **Recommendations:** Monitor sediment accumulation along the drainage ditch. Clear sediment from ditch check dams regularly and re-establish water bars as necessary after storms.	
0122_13	**Status:** **MONITOR FOR CHANGES** **Location**: EMSA – Lower Slope **PCRA:** N/A **Observations:** Hydroseed is taking hold and a large portion of the slope has good vegetative cover. A portion of the slope lost vegetative cover after the storm. Sediment originating at the top of the slope was captured and retained at the silt fence. **Recommendations:** Monitor vegetative cover, propagation of rills, and sediment accumulation at the silt fences after storm events.	

Signature:

0122_14	**Status:** **GOOD** **Location**: EMSA – Lower Slope at Road **PCRA:** N/A **Observations:** Sediment originating at the top of the slope was captured and retained at the silt fence. A large portion of the hydroseeded slope has good vegetative cover. Some of the upper portion of the slope lost vegetative cover and soil as a result of the storm. **Recommendations:** Monitor vegetative cover, propagation of rills, and sediment accumulation at the silt fences after storm events.	
0122_15	**Status:** **MONITOR FOR CHANGES** **Location**: Upper EMSA **PCRA:** N/A **Observations:** Check dams along path to the EMSA Road are retaining sediment satisfactorily. **Recommendations:** Clear sediment or replace check dams regularly, when sediment accumulates above 1/3 of the barrier (check dam) height.	

Signature:

0122_16	**Status:** **GOOD** **Location**: Lower EMSA **PCRA:** N/A **Observations:** Straw wattles and jute matting surrounding the Pond 30 and French drain conveyance are in good condition. Lowest line of silt fences, below vegetated slope, remains in place. **Recommendations:** Monitor the condition of the silt fences around Pond 30 after storm events.	
0122_17	**Status:** **GOOD** **Location**: Pond 13A **PCRA:** N/A **Observations:** Pond vicinity has good vegetative cover. Silt fences and straw wattles have not been replaced due to adequate drainage away from the pond and vegetative cover. **Recommendations:** Replace straw wattles around the pond to capture sediment from any portion of the slope that has partial vegetative cover.	

Signature:

PROJECT: Lehigh Permanente Quarry: Inspection of Erosion and Sediment Control BMPs
Location: Cupertino, California **DATE:** January 22, 2019

0122_18	**Status:** **GOOD** **Location**: Pond 13A **PCRA:** N/A **Observations:** Pond vicinity has good vegetative cover. Silt fences and straw wattles are abandoned due to adequate drainage away from the pond and vegetation. **Recommendations:** Replace straw wattles around the pond to capture sediment from any portion of the slope that has partial vegetative cover.	
0122_19	**Status:** **MONITOR FOR CHANGES** **Location**: Rock Plant – Improved Existing Access Road **PCRA:** N/A **Observations:** Hydroseeded slope lost some vegetative cover resulting from recent storms. Plastic tarps were installed to minimize erosion. **Recommendations:** Monitor storm flow and erosion along the top of the slope beyond the plastic tarp. Monitor soil loss beneath plastic tarp.	

Signature:

PROJECT: Lehigh Permanente Quarry: Inspection of Erosion and Sediment Control BMPs
Location: Cupertino, California **DATE:** January 22, 2019

0122_20	**Status:** **MONITOR FOR CHANGES** **Location**: Rock Plant – Improved Existing Access Road **PCRA:** N/A **Observations:** Rock-lined drainage ditch appeared adequate to reduce flow velocity and retain sediment. Plastic tarps were installed to minimize erosion. **Recommendations:** Monitor sediment accumulation along the drainage ditch. Clear sediment along the ditch.	
0122_21	**Status:** **MONITOR FOR CHANGES** **Location**: Rock Plant – Improved Existing Access Road **PCRA:** N/A **Observations:** Water bars are in place. **Recommendations:** Monitor sheet flow on the road, the condition of the water bars, and re-establish water bars when they are lost to storm flows.	
0122_22	**Status:** **WORK NEEDED** **Location**: Rock Plant – Improved Existing Access Road **PCRA:** N/A **Observations:** Drop inlet riser intercepts sediment captured through the water bars and roadside drainage ditch. **Recommendations:** Regularly clear sediment from and re-establish rock apron.	

Signature:

MONTHLY AND POST-RAIN-EVENT INSPECTION REPORT

PROJECT: Lehigh Permanente Quarry: Inspection of Erosion and Sediment Control BMPs
Location: Cupertino, California **DATE:** **January 22, 2019**

0122_23	**Status:** **WORK NEEDED** **Location**: Rock Plant – Improved Existing Access Road **PCRA:** N/A **Observations:** Sediment level inside the sediment basin has buried the outlet pipe. **Recommendations:** The sediment basin needs to be cleared of sediment to a level below the outlet pipe invert regularly.	

Signature:

March 19, 2019

VIA EMAIL: Manjunath.Shivalingappa@LehighHanson.com

Mr. Manjunath Shivalingappa
Lehigh Southwest Cement Company–Permanente Plant
24001 Stevens Creek Boulevard
Cupertino, California 95014

Dear Mr. Shivalingappa:

Re: Erosion and Sediment Control Best Management Practices (BMPs) Inspections
February 2019 Monthly Report
Lehigh Southwest Cement Company–Permanente Plant
Cupertino, California

GEI Consultants is pleased to submit the February 2019 Erosion and Sediment Control Best Management Practices (BMPs) Inspection Report regarding the implementation of BMPs at the Lehigh Southwest Cement Company plant in support of condition No. 78 items j and l under the "Hydrology and Water Quality" section of the Final Conditions of Approval from June 7, 2012, which state that the Mine Operator shall:

> "…regularly inspect all storm water and erosion controls, especially before and following qualifying rain events. Inspections shall be documented and periodically reported. Any violations shall be corrected immediately." And,
>
> "Ensure that all storm water, erosion, and sediment control BMPs are installed, inspected, maintained, and repaired under the direction of either a California certified engineer, geologist, or landscape architect, a registered professional hydrologist, or a certified erosion control specialist."

GEI Consultants inspected the existing erosion and sediment control BMPs at the Lehigh Southwest Cement Company plant before and after the qualifying rain events in February. A qualifying rain event is defined as "any event that produces 0.5 inches of precipitation or more with a 48-hour or greater period between rain events" (Construction General Permit, 2009-0009-DWQ).

The Lehigh Cement Quarry weather station logged a cumulative measurement of 12.6 inches of rain between February 1 and February 28 accounting for four qualifying rain events. GEI Consultants performed two field inspections at the Lehigh Cement Quarry in February:

February 8, 2019: Post-rain Event Inspection Report

- Qualifying Rain Event from February 1 to February 5, 2019: 4.4 inches

February 25, 2019: Monthly Inspection and Post-rain Event Inspection Report

- Qualifying Rain Event from February 8 to February 10, 2019: 1.4 inches
- Qualifying Rain Event from February 12 to February 17, 2019: 5.5 inches
- Qualifying Rain Event from February 26 to February 27, 2019: 1.25 inches

As part of these inspections, the BMPs onsite were observed and evaluated for performance. A summary of the inspection findings, BMPs' deficiencies, and recommendations based on the observations from the inspections can be found in the attached Daily Field Reports (DFRs). A Site Map detailing the location of the BMPs' deficiencies observed is included with this report.

BMPs Deficiencies and Recommendations

Based on the observations from the February 2019 inspections, BMPs at the Lehigh SW Co. Permanente Plant are generally functional. BMPs identified as deficient were assigned a status of "Work Needed" in the DFRs. Some repairs associated with deficiencies identified in January 2019 had not been completed due to the continuing rainfall and the potential impact of earthwork in these conditions. Recommendations of repairs to address the BMPs' deficiencies and other vulnerabilities identified during the February 2019 inspections are included in the DFRs.

Deficiencies in BMPs that were assigned a status of "Work Needed" in the February 2019 inspection DFRs are tracked in Table 1 below. Two BMPs' deficiencies were identified during the inspections in January 2019 which we continue to track since they had not been addressed in whole. Table 1 presents a brief summary of the location, status, and recommendations for the areas where the deficiencies in the implementation of erosion and sediment control BMPs were identified.

Table 1. BMPs Inspection Overview of Deficient Areas[1]

BMPs Deficiency No.	Inspection Date	Repairs Completed by Inspection Date	DFR Photo ID	Location[1]	Status	Recommendations and Comments
1	01/22/2019 ——— 02/08/2019 02/25/2019	Repairs to be completed	0208_12 0225_11	EMSA–Upper Slope	Work Needed	Local grading was performed to re-establish drainage. A silt fence line is to be installed at the toe of the slope. Flow control measures such as straw wattles or jute netting should be considered and implemented over steep slopes where significant vegetative cover loss is evident to reduce to flow velocities and erosion potential.

BMPs Deficiency No.	Inspection Date	Repairs Completed by Inspection Date	DFR Photo ID	Location[1]	Status	Recommendations and Comments
2	01/22/2019 ——— 02/08/2019 02/25/2019	Repairs to be completed	0208_03 0225_22 0225_23	Rock Plant– Improved Existing Access Road	Work Needed	Sediment basin was cleared of sediment by 02/08/19. On 02/25/19 the sediment basin had accumulated sediment to a level above the outlet invert. Sediment should be cleared from the basin regularly, especially during the rainy season.

[1] Review attached DFR and Site Map for photos and specific locations

We recommend that Lehigh Southwest Cement Company staff monitor the silt fences and other BMPs assigned a status of "MONITOR FOR CHANGES" regularly since these BMPs are vulnerable to sedimentation and storm water flows during rain events and their performance may become compromised.

Table 1 and the recommendations hereby included are intended to be used by Lehigh staff to monitor the condition and performance of erosion and sediment control BMPs, and to address the recommended corrective actions to the BMPs' deficiencies.

If you have any questions, please feel free to contact Hugo Velasquez at (510) 350-2905 or Chris Kissick at (916) 631-4527.

Sincerely,

Hugo Velasquez, P.E., QSP
Project Engineer

Chris Kissick, P.E., QSD/QSP
Quality Control Engineer

GEI CONSULTANTS, INC.

cc: Mrs. Cindy Davis, Mr. Chris Kissick, and Ms. Faith Moore.

Site Map

SITE MAP

February 2019 Inspections

GEI Consultants

Daily Inspection Reports

GEI Consultants

POST-RAIN-EVENT INSPECTION REPORT

PROJECT: Lehigh Permanente Quarry: Inspection of Erosion and Sediment Control BMPs
Location: Cupertino, California **DATE:** **February 8, 2019**

GEI PROJECT # 1804336
OWNER: Lehigh Southwest Cement Co.
CLIENT: Lehigh Southwest Cement Co.
OBSERVATIONS REPORTED TO: Manjunath Shivalingappa
DAILY FIELD REPORT NO.: 6
GEI PROJECT MANAGER: Cindy Davis
REVIEWED BY: Chris Kissick
DATE REVIEWED: 03/18/2019

ENGINEER/GEOLOGIST: Hugo Velasquez
DAY OF WEEK: Friday
TIME ARRVIED: 8:00
TIME DEPARTED: 10:00
TRAVEL TIME (hours): 3.0
TOTAL TIME (hours): 5.0
TEMPERATURE: 40s-50s **AM** - **PM**
WEATHER: ☐ Clear ☐ Rain ☒ Overcast ☐ Fog ☐ Wind ☐ Other:

ATTACHMENTS: ☒ Site Map ☐ Field Sketches ☐ Other(s)

Staff on site:	Organization:
Manjunath Shivalingappa	Lehigh Southwest Cement
Hugo Velasquez	GEI Consultants

Task Overview:

GEI is on-site to conduct the inspection of storm water, erosion, and sediment control BMPs of active and inactive reclamation areas within the Reclamation Plan Amendment (RPA) boundary at the Lehigh Permanente Quarry. Within the RPA boundary, the Permanente Creek Reclamation Area (PCRA) is divided into 7 sub-areas identified as PCRA 1 through 7 on the site map. Erosion and sediment control BMPs are located throughout the quarry and cement plant site, and at each of the PCRAs.

Inspection Summary:

During the inspection on February 8, 2019, t Hugo Velasquez (GEI) and Manjunath Shivalingappa (Lehigh) walked throughout the Lehigh Cement Plant site and inspected the condition of the BMPs at the following locations: Rock Plant, Pond 9, Yeager Yard, WMSA, PCRA 1, Pond 13A and 13B, limestone pile, and EMSA – in that order. A selection of photos representative of the condition of BMPs throughout the site, and taken during the February 8 inspection, are appended.

The main observations documented during the February 8, 2019, inspection of erosion and sediment control BMPs at the Lehigh Cement Plant are as follows:

- The drop inlet sediment basin by the improved existing access road at the Rock Plant was cleared of sediment below the outlet invert.
- At EMSA, loss of vegetative cover and the resulting erosion generated large amounts of sediment that in some cases overtopped nearby silt fences. The buried silt fence in the upper slope of EMSA should be replaced and drainage paths re-established to conduct sediment to the silt fences and other roadside sediment traps.
- At EMSA, over steep slopes with vegetative cover loss and significant erosion, straw wattles and jute netting should be considered to reduce surface flow velocities resulting in a reduction in erosion potential.
- Vegetative cover is taking hold over a large portion of the hydroseeded slopes at the Yeager Yard. Silt fences are capturing the sediment reporting from certain slopes that experienced vegetative cover loss as a result of storm flows. Some silt fences at the Yeager Yard are to be maintained and re-established to close gaps that may further develop during future storms where reinforcing the silt fence to the anchor stakes is necessary.
- Other BMPs are to be maintained regularly during the rainy season: (1) check dams and rock-lined drainage ditches are to be cleared of sediment regularly. (2) accumulation of sediment behind silt fences is to be monitored and cleared as necessary after rain events to maintain containment and prevent sediment from overtopping the silt fences. (3) water bars should monitored and re–established when they wash away.

Signature:

GEI Consultants

POST-RAIN-EVENT INSPECTION REPORT

PROJECT: Lehigh Permanente Quarry: Inspection of Erosion and Sediment Control BMPs
Location: Cupertino, California **DATE:** **February 8, 2019**

PHOTO ID	DESCRIPTION	PHOTO
0208_01	**Status:** **MONITOR FOR CHANGES** **Location**: Rock Plant – Improved Existing Access Road **PCRA:** N/A **Observations:** Rock-lined drainage ditch appeared adequate to reduce flow velocity and retain sediment. Plastic tarps were installed to minimize erosion. **Recommendations:** Monitor sediment accumulation along the drainage ditch. Clear sediment along the ditch.	
0208_02	**Status:** **MONITOR FOR CHANGES** **Location**: Rock Plant – Improved Existing Access Road **PCRA:** N/A **Observations:** Drop inlet riser intercepts sediment captured through the water bars and roadside drainage ditch. **Recommendations:** Regularly clear sediment from and re-establish rock apron.	
0208_03	**Status:** **GOOD** **Location**: Rock Plant – Improved Existing Access Road **PCRA:** N/A **Observations:** Sediment basin was cleared of sediment below the pipe invert. **Recommendations:** Monitor the sediment level inside the sediment basin and clear the basin regularly.	

Signature:

POST-RAIN-EVENT INSPECTION REPORT

PROJECT: Lehigh Permanente Quarry: Inspection of Erosion and Sediment Control BMPs
Location: Cupertino, California **DATE:** **February 8, 2019**

0208_04	**Status:** **GOOD** **Location**: Pond 9 **PCRA:** N/A **Observations:** Hay bales and fiber rolls form a continuous trap for sediment along the roadside. **Recommendations:** Monitor the condition of the hay bales and fiber rolls after rain events.	
0208_05	**Status:** **GOOD** **Location**: Quarry Haul Road – From Pond 13B to UTS **PCRA:** 5 and 6 **Observations:** Silt fence line was installed below existing silt fence for containment of the stockpile material on the creekside slope. **Recommendations:** Monitor sediment and debris accumulation behind silt fences after rain events.	
0208_06	**Status:** **MONITOR FOR CHANGES** **Location**: Quarry Haul Road – From Pond 13 to UTS **PCRA:** 5 and 6 **Observations:** Pipelines along Haul Road are affecting vegetated slope which may impact silt fences below. **Recommendations:** Monitor silt fences to confirm they are not affected by pipeline or large vegetation nearby.	

Signature:

POST-RAIN-EVENT INSPECTION REPORT

PROJECT: Lehigh Permanente Quarry: Inspection of Erosion and Sediment Control BMPs
Location: Cupertino, California **DATE:** **February 8, 2019**

0208_07	**Status:GOOD** **Location**: Yeager Yard **PCRA:** 2 and 3 **Observations:** Vegetation from hydroseeding is taking hold on the upper slopes. Silt fences remain in place. **Recommendations:** Check slope following rain events to confirm that vegetation remains in place to mitigate potential erosion.	
0208_08	**Status:** **MONITOR FOR CHANGES** **Location**: Yeager Yard **PCRA:** 2 and 3 **Observations:** Vegetation from hydroseeding is taking hold on the upper slopes. Lower slopes have lost some of the hydroseed vegetative cover **Recommendations:** Hydroseeding or silt fence replacement on the lower slope may be unsafe following rain events which result in vegetative cover loss and soil movement.	
0208_09	**Status:** **MONITOR FOR CHANGES** **Location**: Haul Road down to Yeager Yard **PCRA:** 1 and 2 **Observations:** Sediment traps, check dams, and water bars are kept functional and appear adequate. **Recommendations:** Water bars are to be re-established following rain events. Sediment traps are to be cleared of sediment regularly.	

Signature:

0208_10	**Status:** **GOOD** **Location**: WMSA **PCRA:** 1 **Observations:** Silt fences along and below the access road remain in place. Slope below road is partially vegetated. Sediment captured by lower silt fences is minimal. **Recommendations:** Monitor sedimentation behind lower line of silt fences and the silt fence condition after storms.	
0208_11	**Status:** **GOOD** **Location**: Pond 13A **PCRA:** N/A **Observations:** Pond vicinity has good vegetative cover. Silt fences and straw wattles are abandoned due to adequate drainage away from the pond and vegetation. **Recommendations:** Replace straw wattles around the pond to capture sediment from any portion of the slope that has partial vegetative cover.	
0208_12	**Status:** **WORK NEEDED** **Location**: EMSA – Upper Slope **PCRA:** N/A **Observations:** Hydroseeded slope experiences loss of vegetative cover due to the storm. Silt fence below was overtopped by sediment. **Recommendations:** Re-establish silt fence line below hydroseeded slope and regrade loose soil at the base of the	

Signature:

	slope to drain towards adjacent drainage ditch.	
0208_13	**Status:** **MONITOR FOR CHANGES** **Location**: EMSA – Lower Slope **PCRA:** N/A **Observations:** Hydroseed is taking hold and a large portion of the slope has good vegetative cover. A portion of the slope lost vegetative cover after the storm. Sediment originating at the top of the slope was captured and retained at the silt fence. **Recommendations:** Monitor vegetative cover, propagation of rills, and sediment accumulation at the silt fences after storm events.	

Signature:

GEI Consultants

MONTHLY AND POST-RAIN-EVENT INSPECTION REPORT

PROJECT: Lehigh Permanente Quarry: Inspection of Erosion and Sediment Control BMPs
Location: Cupertino, California **DATE:** **February 25, 2019**

GEI PROJECT # 1804336
OWNER: Lehigh Southwest Cement Co.
CLIENT: Lehigh Southwest Cement Co.
OBSERVATIONS REPORTED TO: Manjunath Shivalingappa
DAILY FIELD REPORT NO.: 7
GEI PROJECT MANAGER: Cindy Davis
REVIEWED BY: Chris Kissick
DATE REVIEWED: 03/18/2019

ENGINEER/GEOLOGIST: Hugo Velasquez
DAY OF WEEK: Monday
TIME ARRVIED: 8:00
TIME DEPARTED: 11:00
TRAVEL TIME (hours): 2.5
TOTAL TIME (hours): 5.5
TEMPERATURE: 40s-50s **AM** - **PM**
WEATHER: ☐ Clear ☐ Rain ☒ Overcast ☐ Fog ☐ Wind ☐ Other:

ATTACHMENTS: ☒ Site Map ☐ Field Sketches ☐ Other(s)

Staff on site:	Organization:
Manjunath Shivalingappa	Lehigh Southwest Cement
Hugo Velasquez	GEI Consultants

Task Overview:

GEI is on-site to conduct the inspection of storm water, erosion, and sediment control BMPs of active and inactive reclamation areas within the Reclamation Plan Amendment (RPA) boundary at the Lehigh Permanente Quarry. Within the RPA boundary, the Permanente Creek Reclamation Area (PCRA) is divided into 7 sub-areas identified as PCRA 1 through 7 on the site map. Erosion and sediment control BMPs are located throughout the quarry and cement plant site, and at each of the PCRAs.

Inspection Summary:

During the inspection on February 25, 2019, Hugo Velasquez (GEI) and Manjunath Shivalingappa (Lehigh) walked throughout the Lehigh Quarry and Cement Plant site and inspected the condition of the BMPs at the following locations: Quarry Haul Road, Yeager Yard, West Material Storage Area (WMSA), PCRA 1, Pond 13 B, Rock Plant, East Material Storage Area (EMSA), Upper EMSA, and Lower EMSA – in that order. A selection of photos representative of the condition of BMPs throughout the site, and taken during the February 25 inspection, are appended.

The main observations documented during the February 25, 2019, inspection of erosion and sediment control BMPs at the Lehigh Cement Plant are as follows:

- Vegetative cover is taking hold over a large portion of the hydroseeded slopes at the Yeager Yard. Silt fences are capturing the sediment reporting from certain slopes that experienced vegetative cover loss as a result of storm flows. Some silt fences at the Yeager Yard are to be maintained and re-established to close gaps that may further develop during future storms where reinforcing the silt fence to the anchor stakes is necessary.
- The drop inlet sediment basin by the improved existing access road at the Rock Plant is full of sediment which is to be cleared at least a foot below the outlet invert.
- The drainage path on the upper slope of the EMSA was re-established to conduct sediment to the roadside sediment traps.
- At EMSA, over steep slopes with vegetative cover loss and significant erosion, straw wattles and jute netting should be considered to reduce surface flow velocities and erosion potential.
- Loss of vegetative cover and the resulting erosion generated large amounts of sediment that in some cases overtopped nearby silt fences. The buried silt fence in the upper slope of EMSA should to be replaced.
- Other BMPs are to be maintained regularly during the rainy season: (1) check dams and rock-lined drainage ditches are to be cleared of sediment regularly. (2) accumulation of sediment behind silt fences is to be monitored and cleared as necessary after rain events to maintain containment and prevent sediment from overtopping the silt fences. (3) water bars should monitored and re–established when they wash away.

Signature:

GEI Consultants

MONTHLY AND POST-RAIN-EVENT INSPECTION REPORT

PROJECT: Lehigh Permanente Quarry: Inspection of Erosion and Sediment Control BMPs
Location: Cupertino, California **DATE:** **February 25, 2019**

PHOTO ID	DESCRIPTION	PHOTO
0225_01	**Status:** **GOOD** **Location**: Quarry Haul Road – From Pond 13B to UTS **PCRA:** 5 and 6 **Observations:** Silt fence line remains in place below previous upper silt fence for containment of the stockpile material on the creekside slope. **Recommendations:** Monitor sediment and debris accumulation behind silt fences after rain events.	
0225_02	**Status:** **GOOD** **Location**: Quarry Haul Road – From Pond 13B to UTS **PCRA:** 5 and 6 **Observations:** Roadside berm was remains in place. **Recommendations:** Keep stockpiles away from the berm. Monitor berm condition after rain events.	
0225_03	**Status:** **MONITOR FOR CHANGES** **Location**: Quarry Haul Road – From Pond 13 to UTS **PCRA:** 5 and 6 **Observations:** Pipelines along Haul Road are affecting vegetated slope which may impact silt fences below. **Recommendations:** Monitor silt fences to confirm they are not affected by pipeline or large vegetation nearby.	

Signature:

PROJECT: Lehigh Permanente Quarry: Inspection of Erosion and Sediment Control BMPs
Location: Cupertino, California **DATE:** **February 25, 2019**

0225_04	**Status:GOOD** **Location**: Yeager Yard **PCRA:** 2 and 3 **Observations:** Vegetation from hydroseeding is taking hold on the upper slopes. Silt fences remain in place. **Recommendations:** Check slope following rain events to confirm that vegetation remains in place to mitigate potential erosion.	
0225_05	**Status:** **MONITOR FOR CHANGES** **Location**: Yeager Yard **PCRA:** 2 and 3 **Observations:** Vegetation from hydroseeding is taking hold on the upper slopes. Lower slopes have lost some of the hydroseed vegetative cover. **Recommendations:** Hydroseeding or silt fence replacement on the lower slope may be unsafe following rain events which result in vegetative cover loss and soil movement.	
0225_06	**Status:** **MONITOR FOR CHANGES** **Location**: Yeager Yard **PCRA:** 2 and 3 **Observations:** Vegetation from hydroseeding is taking hold. Silt fences provide secondary containment in case of vegetative cover loss. **Recommendations:** Silt fences are to be re-assembled in case of vegetative cover loss following rain events.	

Signature:

0225_07	**Status:** **MONITOR FOR CHANGES** **Location**: Yeager Yard **PCRA:** 2 **Observations:** Vegetation from hydroseeding is taking hold, although some vegetative cover loss is evident. Silt fences provide secondary containment in case of vegetative cover loss. **Recommendations:** Monitor vegetative cover and sediment accumulation behind silt fence.	
0225_08	**Status:** **MONITOR FOR CHANGES** **Location**: Yeager Yard **PCRA:** 2 **Observations:** Jute matting remains in place and vegetation is taking hold. Silt fences provide secondary containment in hcase of vegetative cover loss. **Recommendations:** Monitor vegetative cover over slope and sediment accumulation behind silt fences.	
0225_09	**Status:** **MONITOR FOR CHANGES** **Location**: Yeager Yard **PCRA:** 2 **Observations:** Hydroseeded vegetative cover loss is evident. Silt fences were overtopped by sediment and rain storm flows. Sediment is confined within vegetated bench. **Recommendations:** Re-establish overtopped silt fence and monitor sediment on lower bench.	

Signature:

PROJECT: Lehigh Permanente Quarry: Inspection of Erosion and Sediment Control BMPs
Location: Cupertino, California **DATE:** **February 25, 2019**

0225_10	**Status:** **GOOD** **Location**: WMSA **PCRA:** 1 **Observations:** Silt fences along and below the access road remain in place. Slope below road is largely vegetated. **Recommendations:** Monitor sedimentation behind lower line of silt fences and the silt fence condition after storms.	
0225_11	**Status:** **WORK NEEDED** **Location**: EMSA – Upper Slope **PCRA:** N/A **Observations:** Drainage path was graded below overtopped silt fence. **Recommendations:** Re-establish silt fence line below hydroseeded slope, above the adjacent drainage ditch. Over steep slopes with significant erosion, straw wattles and jute netting should be considered to reduce surface flow velocities and erosion potential.	
0225_12	**Status:** **GOOD** **Location**: EMSA – Road **PCRA:** N/A **Observations:** Drainage ditch and rock protection remain operational: sediment is being captured. **Recommendations:** Monitor sediment accumulation along the drainage ditch. Clear sediment from ditch check dams regularly.	

Signature:

0225_13	**Status:** **MONITOR FOR CHANGES** **Location**: EMSA – Lower Slope **PCRA:** N/A **Observations:** Hydroseed is taking hold and a large portion of the slope has good vegetative cover. A portion of the slope lost vegetative cover after the storm. Sediment overtopped the silt fence and is being captured by the rock-lined roadside drainage ditch. **Recommendations:** Monitor vegetative cover, propagation of rills, and sediment accumulation at the silt fences after storm events. Over steep slopes with vegetative cover loss and significant erosion, straw wattles and jute netting should be considered to reduce surface flow velocities and erosion potential.	
0225_14	**Status:** **MONITOR FOR CHANGES** **Location**: EMSA – Lower Slope at Road **PCRA:** N/A **Observations:** Part of the upper portion of the slope lost vegetative cover and soil because of recent storms. Sediment from the top of the slope overtopped the silt fence. **Recommendations:** Monitor vegetative cover, propagation of rills, and sediment accumulation at the silt fences and check dams after storm events.	

Signature:

PROJECT: Lehigh Permanente Quarry: Inspection of Erosion and Sediment Control BMPs
Location: Cupertino, California **DATE:** **February 25, 2019**

0225_15	**Status:** **MONITOR FOR CHANGES** **Location**: Upper EMSA **PCRA:** N/A **Observations:** Check dams along path to the EMSA Road are retaining sediment satisfactorily. **Recommendations:** Clear sediment or replace check dams regularly, when sediment accumulates above 1/3 of the barrier (check dam) height.	
0225_16	**Status:** **GOOD** **Location**: Lower EMSA **PCRA:** N/A **Observations:** Silt fence, straw wattles, and jute matting near Pond 30 and French drain conveyance are in good condition. Lowest line of silt fences, below vegetated slope, remains in place. **Recommendations:** Monitor the condition of the silt fences around Pond 30 after storm events.	
0225_17	**Status:** **GOOD** **Location**: Lower EMSA **PCRA:** N/A **Observations:** Straw wattles and jute matting near Pond 30 and French drain conveyance are in good condition. **Recommendations:** None at this time.	

Signature:

PROJECT: Lehigh Permanente Quarry: Inspection of Erosion and Sediment Control BMPs
Location: Cupertino, California **DATE:** **February 25, 2019**

0225_18	**Status:** **GOOD** **Location**: Pond 13B **PCRA:** N/A **Observations:** Pond vicinity has good vegetative cover. Straw wattles were replaced even though there is good vegetative cover on the slopes. **Recommendations:** None at this time.	
0225_19	**Status:** **GOOD** **Location**: Pond 13B **PCRA:** N/A **Observations:** Straw wattles were replaced. Silt fences are abandoned due to adequate drainage away from the pond and vegetation. **Recommendations:** None at this time.	
0225_20	**Status:** **MONITOR FOR CHANGES** **Location**: Rock Plant – Improved Existing Access Road **PCRA:** N/A **Observations:** Hydroseeded slope lost some vegetative cover resulting from recent storms. Plastic tarps were installed to minimize erosion. **Recommendations:** Monitor storm flow and erosion along the top of the slope beyond the plastic tarp. Monitor soil loss beneath plastic tarp.	

Signature:

PROJECT: Lehigh Permanente Quarry: Inspection of Erosion and Sediment Control BMPs
Location: Cupertino, California **DATE:** **February 25, 2019**

0225_21	**Status:** **MONITOR FOR CHANGES** **Location**: Rock Plant – Improved Existing Access Road **PCRA:** N/A **Observations:** Rock-lined drainage ditch appeared adequate to reduce flow velocity and retain sediment. **Recommendations:** Monitor sediment accumulation along the drainage ditch. Clear sediment along the ditch.	
0225_22	**Status:** **WORK NEEDED** **Location**: Rock Plant – Improved Existing Access Road **PCRA:** N/A **Observations:** Drop inlet riser intercepts sediment captured through the water bars and roadside drainage ditch. **Recommendations:** Regularly clear sediment from and re-establish rock apron.	
0225_23	**Status:** **WORK NEEDED** **Location**: Rock Plant – Improved Existing Access Road **PCRA:** N/A **Observations:** Sediment level inside the sediment basin has buried the outlet pipe. **Recommendations:** The sediment basin needs to be cleared of sediment to a level below the outlet pipe invert regularly.	

Signature:

April 22, 2019

VIA EMAIL: Manjunath.Shivalingappa@LehighHanson.com

Mr. Manjunath Shivalingappa
Lehigh Southwest Cement Company–Permanente Plant
24001 Stevens Creek Boulevard
Cupertino, California 95014

Dear Mr. Shivalingappa:

Re: Erosion and Sediment Control Best Management Practices (BMPs) Inspections March 2019 Monthly Report Lehigh Southwest Cement Company–Permanente Plant Cupertino, California

GEI Consultants is pleased to submit the March 2019 Erosion and Sediment Control Best Management Practices (BMPs) Inspection Report regarding the implementation of BMPs at the Lehigh Southwest Cement Company plant in support of condition No. 78 items j and l under the "Hydrology and Water Quality" section of the Final Conditions of Approval from June 7, 2012, which state that the Mine Operator shall:

> "…regularly inspect all storm water and erosion controls, especially before and following qualifying rain events. Inspections shall be documented and periodically reported. Any violations shall be corrected immediately." And,
>
> "Ensure that all storm water, erosion, and sediment control BMPs are installed, inspected, maintained, and repaired under the direction of either a California certified engineer, geologist, or landscape architect, a registered professional hydrologist, or a certified erosion control specialist."

GEI Consultants inspected the existing erosion and sediment control BMPs at the Lehigh Southwest Cement Company plant before and after the qualifying rain events in March. A qualifying rain event is defined as "any event that produces 0.5 inches of precipitation or more with a 48-hour or greater period between rain events" (Construction General Permit, 2009-0009-DWQ).

The Lehigh Cement Quarry weather station logged a cumulative measurement of 3.77 inches of rain between March 1 and March 29 accounting for three qualifying rain events. GEI Consultants performed two field inspections at the Lehigh Cement Quarry in March:

March 11, 2019: Post-rain Event Inspection Report

- Qualifying Rain Event from March 2 to March 3, 2019: 0.68 inches
  - Storm event was a continuation of the storm event that began on February 26 and which accounted for a total of 2.03 inches. 1.35 inches of rain were recorded from February 26 and February 28.

March 28, 2019: Monthly Inspection and Post-rain Event Inspection Report

- Qualifying Rain Event from March 5 to March 10, 2019: 1.62 inches
- Qualifying Rain Event from March 25 to March 29, 2019: 1.07 inches

As part of these inspections, the BMPs onsite were observed and evaluated for performance. A summary of the inspection findings, BMPs' deficiencies, and recommendations based on the observations from the inspections can be found in the attached Daily Field Reports (DFRs). A Site Map detailing the location of the BMPs' deficiencies observed is included with this report.

BMPs Deficiencies and Recommendations

Based on the observations from the March 2019 inspections, BMPs at the Lehigh SW Co. Permanente Plant are generally functional and, collectively, in good condition. BMPs identified as deficient were assigned a status of "Work Needed" in the DFRs. Some repairs associated with deficiencies identified in February 2019 at the Rock Plant were under construction at the time of the March inspections. These repairs resulted from sediment and debris clogging the sediment basin discharge pipe line. Recommendations of repairs to address the BMPs' deficiencies and other vulnerabilities identified during the March 2019 inspections are included in the DFRs.

Deficiencies in BMPs that were assigned a status of "Work Needed" in the March 2019 inspection DFRs are tracked in Table 1 below. Two BMPs' deficiencies were identified during the inspections in February 2019 which we continue to track since they had not been addressed in whole. Table 1 presents a brief summary of the location, status, and recommendations for the areas where the deficiencies in the implementation of erosion and sediment control BMPs were identified.

Table 1. BMPs Inspection Overview of Deficient Areas[1]

BMPs Deficiency No.	Inspection Date	Repairs Completed by Inspection Date	DFR Photo ID	Location[1]	Status	Recommendations and Comments
1	01/22/2019 02/08/2019 02/25/2019 ——— 03/11/2019 ——— 03/28/2019	03/08/2019 ——— Vegetative Cover improved in areas resulting in repairs not being needed.	0311_17 0311_18 ——— 0328_20 0328_22	EMSA–Upper Slope	Repairs no longer needed	Local grading was performed to re-establish drainage. A silt fence line was installed at the toe of the slope. Vegetative cover was re-established over steep slopes where significant vegetative cover loss had been documented during previous inspections.

BMPs Deficiency No.	Inspection Date	Repairs Completed by Inspection Date	DFR Photo ID	Location[1]	Status	Recommendations and Comments
2	01/22/2019 02/08/2019 02/25/2019 ——— 03/11/2019 ——— 03/28/2019	Discharge pipe under repair to remove the sediment and debris clogging the pipe.	0328_13 0328_14 0328_15	Rock Plant– Improved Existing Access Road	Sediment basin was cleared of sediment ——— Discharge pipe Under Repair	Sediment basin was cleared of sediment by 02/08/19. On 02/25/19 the sediment basin had accumulated sediment to a level above the outlet invert. Sediment basin was cleared of sediment below the discharge pipe invert level prior to the 03/11/2019 inspection. ——— The discharge pipe was observed to be clogged and repairs began to remove the sediment and debris and replace a pipe segment as necessary.

[1] Review attached DFR and Site Map for photos and specific locations

We recommend that Lehigh Southwest Cement Company re-establish BMPs that are to remain functional throughout the plant at the end of the rainy season. We recommend that Lehigh Cement Co. continue to monitor the silt fences and other BMPs assigned a status of "MONITOR FOR CHANGES" year-round, beyond the rainy season.

Table 1 and the recommendations hereby included are intended to be used by Lehigh staff to monitor the condition and performance of erosion and sediment control BMPs, and to address the recommended corrective actions to the BMPs' deficiencies.

If you have any questions, please feel free to contact Hugo Velasquez at (510) 350-2905 or Chris Kissick at (916) 631-4527.

Sincerely,

Hugo Velasquez, P.E., QSP
Project Engineer

Chris Kissick, P.E., QSD/QSP
Quality Control Engineer

GEI CONSULTANTS, INC.

cc: Mrs. Cindy Davis, Mr. Chris Kissick, and Ms. Faith Moore.

Site Map

SITE MAP

March 2019 Inspections

GEI Consultants

Daily Inspection Reports

POST-RAIN-EVENT INSPECTION REPORT

PROJECT: Lehigh Permanente Quarry: Inspection of Erosion and Sediment Control BMPs
Location: Cupertino, California **DATE:** March 11, 2019

GEI PROJECT # 1804336
OWNER: Lehigh Southwest Cement Co.
CLIENT: Lehigh Southwest Cement Co.
OBSERVATIONS REPORTED TO: Manjunath Shivalingappa
DAILY FIELD REPORT NO.: 8
GEI PROJECT MANAGER: Cindy Davis
REVIEWED BY: Chris Kissick
DATE REVIEWED: 04/22/2019

ENGINEER/GEOLOGIST: Hugo Velasquez
DAY OF WEEK: Monday
TIME ARRVIED: 7:30
TIME DEPARTED: 10:00
TRAVEL TIME (hours): 3.0
TOTAL TIME (hours): 5.5
TEMPERATURE: 40s-50s **AM** - **PM**
WEATHER: ☒ Clear ☐ Rain ☐ Overcast ☐ Fog ☐ Wind ☐ Other:

ATTACHMENTS: ☒ Site Map ☐ Field Sketches ☐ Other(s)

Staff on site:	Organization:
Manjunath Shivalingappa	Lehigh Southwest Cement
Hugo Velasquez	GEI Consultants

Task Overview:

GEI is on-site to conduct the inspection of storm water, erosion, and sediment control BMPs of active and inactive reclamation areas within the Reclamation Plan Amendment (RPA) boundary at the Lehigh Permanente Quarry. Within the RPA boundary, the Permanente Creek Reclamation Area (PCRA) is divided into 7 sub-areas identified as PCRA 1 through 7 on the site map. Erosion and sediment control BMPs are located throughout the quarry and cement plant site, and at each of the PCRAs.

Inspection Summary:

During the inspection on March 11, 2019, Hugo Velasquez (GEI) and Manjunath Shivalingappa (Lehigh) walked throughout the Lehigh Quarry and Cement Plant site and inspected the condition of the BMPs at the following locations: Rock Plant, Quarry Haul Road, Water Treatment System (WTS), Yeager Yard, West Material Storage Area (WMSA), PCRA 1, Pond 13 B, Pond 9, Upper East Material Storage Area (EMSA), and Lower EMSA – in that order. A selection of photos representative of the condition of BMPs throughout the site taken during the March 11 inspection are included.

The main observations documented during the March 11, 2019, inspection of erosion and sediment control BMPs at the Lehigh Cement Plant are as follows:

- The drop inlet sediment basin by the improved existing access road at the Rock Plant was cleared of sediment.
- Sediment and debris clogged the discharge pipe from the drop inlet sediment basin. Repairs were scheduled.
- Vegetative cover is taking hold over a large portion of the hydroseeded slopes at the Yeager Yard.
- Vegetative cover is sufficient over the upper slopes of the Yeager Yard. It is not necessary to maintain the silt fences at the Yeager Yard in areas where the vegetative cover is established.
- The drainage path on the upper slope of the EMSA was re-established to conduct sediment to the roadside sediment traps.
- At EMSA, vegetative cover began to develop and become established over steep hydroseeded slopes that had previously experienced vegetative cover loss and significant erosion. Once further established, this vegetative cover will reduce the erosion over these slopes.
- Other BMPs are to be maintained following the rainy season: (1) check dams and rock-lined drainage ditches are to be cleared of sediment regularly; or replaced if necessary at the end of the rainy season (2) accumulation of sediment behind silt fences is to be monitored and silt fences maintained to maintain the desired containment of sediment year-round. (3) water bars should monitored and re–established when they wash away.

Signature:

POST-RAIN-EVENT INSPECTION REPORT

PROJECT: Lehigh Permanente Quarry: Inspection of Erosion and Sediment Control BMPs
Location: Cupertino, California **DATE:** **March 11, 2019**

PHOTO ID	DESCRIPTION	PHOTO
0311_01	**Status:** **MONITOR FOR CHANGES** **Location**: Rock Plant – Improved Existing Access Road **PCRA:** N/A **Observations:** Hydroseeded slope lost some vegetative cover resulting from recent storms. Plastic tarps were installed to minimize erosion. **Recommendations:** Monitor storm flow and erosion along the top of the slope beyond the plastic tarp.	
0311_02	**Status:** **MONITOR FOR CHANGES** **Location**: Rock Plant – Improved Existing Access Road **PCRA:** N/A **Observations:** Rock-lined drainage ditch appeared adequate to reduce flow velocity and retain sediment. **Recommendations:** Clear sediment along the ditch following the rainy season.	
0311_03	**Status:** **MONITOR FOR CHANGES** **Location**: Rock Plant – Improved Existing Access Road **PCRA:** N/A **Observations:** Drop inlet riser captures sediment conveyed through the water bars and roadside drainage ditch. **Recommendations:** Regularly clear sediment from and re-establish rock apron.	

Signature:

POST-RAIN-EVENT INSPECTION REPORT

PROJECT: Lehigh Permanente Quarry: Inspection of Erosion and Sediment Control BMPs
Location: Cupertino, California **DATE:** **March 11, 2019**

0311_04	**Status:** **UNDER REPAIR** **Location**: Rock Plant – Improved Existing Access Road **PCRA:** N/A **Observations:** Sediment level inside the sediment basin was below the pipe invert as the basin had recently been cleared of sediment. Discharge pipe is clogged with sediment and debris. **Recommendations:** None at this time	
0311_05	**Status:** **GOOD** **Location**: Quarry Haul Road – From Pond 13B to UTS **PCRA:** 5 and 6 **Observations:** Silt fence line remains in place below previous upper silt fence for containment of the stockpile material on the creekside slope. **Recommendations:** Monitor sediment and debris accumulation behind silt fences after rain events.	
0311_06	**Status:** **GOOD** **Location**: Quarry Haul Road – From Pond 13B to UTS **PCRA:** 5 and 6 **Observations:** Roadside berm was remains in place. **Recommendations:** Keep stockpiles away from the berm. Monitor berm condition after rain events.	

Signature:

POST-RAIN-EVENT INSPECTION REPORT

PROJECT: Lehigh Permanente Quarry: Inspection of Erosion and Sediment Control BMPs
Location: Cupertino, California **DATE:** **March 11, 2019**

0311_07	**Status:** **MONITOR FOR CHANGES** **Location**: Quarry Haul Road – From Pond 13 to UTS **PCRA:** 5 and 6 **Observations:** Pipelines along Haul Road are affecting vegetated slope which may impact silt fences below. **Recommendations:** Monitor silt fences to confirm they are not affected by pipeline or large vegetation nearby.	
0311_08	**Status:GOOD** **Location**: Water Treatment System (WTS) **PCRA:** 2 and 3 **Observations:** Vegetation is maintained below the silt fence. Silt fences remain in place. **Recommendations:** Check silt fences following rain events and confirm that vegetation remains in place to mitigate potential erosion.	
0311_09	**Status:GOOD** **Location**: Yeager Yard **PCRA:** 2 and 3 **Observations:** Vegetation from hydroseeding is taking hold on the upper slopes. Silt fences remain in place. **Recommendations:** Check slope following rain events to confirm that vegetation remains in place to mitigate potential erosion.	

Signature:

POST-RAIN-EVENT INSPECTION REPORT

PROJECT: Lehigh Permanente Quarry: Inspection of Erosion and Sediment Control BMPs
Location: Cupertino, California **DATE:** **March 11, 2019**

0311_10	**Status:** **MONITOR FOR CHANGES** **Location**: Yeager Yard **PCRA:** 2 and 3 **Observations:** Vegetation from hydroseeding is taking hold on the upper slopes. Lower slopes have lost some of the hydroseed vegetative cover. **Recommendations:** Repairs on the lower slope of Yeager Yard may be unsafe.	
0311_11	**Status:GOOD** **Location**: WMSA **PCRA:** 1 **Observations:** Check dams remain functional and drainage ditches continue to convey stormwater. **Recommendations:** Check sedimentation behind check dams along the Quarry Haul Road towards WMSA.	
0311_12	**Status:** **GOOD** **Location**: PCRA 1 **PCRA:** 1 **Observations:** Silt fences along and below the access road remain in place. Slope below road is largely vegetated. **Recommendations:** Monitor sedimentation behind lower line of silt fences and the silt fence condition after storms.	

Signature:

POST-RAIN-EVENT INSPECTION REPORT

PROJECT: Lehigh Permanente Quarry: Inspection of Erosion and Sediment Control BMPs
Location: Cupertino, California **DATE:** **March 11, 2019**

0311_13	**Status:** **GOOD** **Location**: Pond 13B **PCRA:** N/A **Observations:** Pond vicinity has good vegetative cover. Straw wattles were replaced even though there is good vegetative cover on the slopes. **Recommendations:** None at this time.	
0311_14	**Status:** **GOOD** **Location**: Pond 13B **PCRA:** N/A **Observations:** Straw wattles were replaced. Silt fences are abandoned due to adequate drainage away from the pond and vegetation. **Recommendations:** None at this time.	
0311_15	**Status:GOOD** **Location**: Road from Rock Plant to Pond 13B **PCRA:** N/A **Observations:** Check dams appears functional capturing surface flows and retaining sediment. **Recommendations:** Maintain check dams in place, clear sediment regularly.	

Signature:

0311_16	**Status:GOOD** **Location**: Pond 9 **PCRA:** N/A **Observations:** Straw wattles and hay bales remain in place along the access road to Pond 9. **Recommendations:** Replace straw wattles and hay bales at the end of the rainy season.	
0311_17	**Status:** **MONITOR FOR CHANGES** **Location**: EMSA – Upper Slope **PCRA:** N/A **Observations:** Silt fence was replaced above the drainage path graded below previously overtopped silt fence. **Recommendations:** If vegetative cover loss or soil movement is evident over due to significant erosion, jute netting should be applied to reduce flow velocities and erosion potential.	
0311_18	**Status:** **MONITOR FOR CHANGES** **Location**: EMSA – Lower Slope **PCRA:** N/A **Observations:** Vegetative growth was re-established after a portion of the slope lost vegetative cover. Silt fence was replaced where sediment overtopped the previous fence. **Recommendations:** Monitor vegetative cover, silt fences, and propagation of rills.	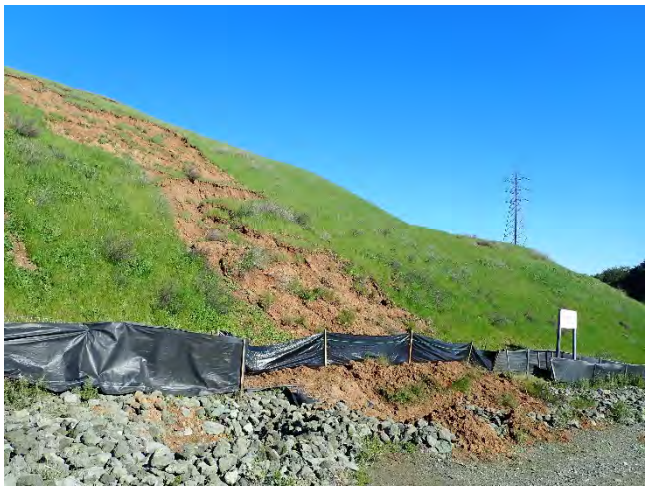

Signature:

POST-RAIN-EVENT INSPECTION REPORT

PROJECT: Lehigh Permanente Quarry: Inspection of Erosion and Sediment Control BMPs
Location: Cupertino, California **DATE:** **March 11, 2019**

0311_19	**Status:** **GOOD** **Location**: Lower EMSA **PCRA:** N/A **Observations:** Silt fence, straw wattles, and jute matting near Pond 30 and French drain conveyance are in good condition. Lowest line of silt fences, below vegetated slope, remains in place. **Recommendations:** Monitor the condition of the silt fences around Pond 30.	
0311_20	**Status:** **GOOD** **Location**: Lower EMSA **PCRA:** N/A **Observations:** Straw wattles and jute matting near Pond 30 and French drain conveyance are in good condition. **Recommendations:** None at this time.	
0311_21 Taken by Lehigh staff during drop inlet cleanout.	**Status:** **UNDER REPAIR** **Location**: Rock Plant – Improved Existing Access Road **PCRA:** N/A **Observations:** Sediment level inside the sediment basin is being cleared below discharge pipe invert. Discharge pipe to be unclogged. **Recommendations:** None at this time	

Signature:

GEI Consultants

MONTHLY AND POST-RAIN-EVENT INSPECTION REPORT

PROJECT: Lehigh Permanente Quarry: Inspection of Erosion and Sediment Control BMPs
Location: Cupertino, California **DATE:** March 28, 2019

GEI PROJECT # 1804336
OWNER: Lehigh Southwest Cement Co.
CLIENT: Lehigh Southwest Cement Co.
OBSERVATIONS REPORTED TO: Manjunath Shivalingappa
DAILY FIELD REPORT NO.: 9
GEI PROJECT MANAGER: Cindy Davis
REVIEWED BY: Chris Kissick
DATE REVIEWED: 04/22/2019

ENGINEER/GEOLOGIST: Hugo Velasquez
DAY OF WEEK: Thursday
TIME ARRVIED: 13:00
TIME DEPARTED: 16:30
TRAVEL TIME (hours): 2.5
TOTAL TIME (hours): 6.0
TEMPERATURE: - **AM** 60s-70s **PM**
WEATHER: ☒ Clear ☐ Rain ☐ Overcast ☐ Fog ☐ Wind ☐ Other:

ATTACHMENTS: ☒ Site Map ☐ Field Sketches ☐ Other(s)

Staff on site:	Organization:
Tressa Jackson	Lehigh Southwest Cement
Hugo Velasquez	GEI Consultants

Task Overview:

GEI is on-site to conduct the inspection of storm water, erosion, and sediment control BMPs of active and inactive reclamation areas within the Reclamation Plan Amendment (RPA) boundary at the Lehigh Permanente Quarry. Within the RPA boundary, the Permanente Creek Reclamation Area (PCRA) is divided into 7 sub-areas identified as PCRA 1 through 7 on the site map. Erosion and sediment control BMPs are located throughout the quarry and cement plant site, and at each of the PCRAs.

Inspection Summary:

During the inspection on March 28, 2019, Hugo Velasquez (GEI) and Manjunath Shivalingappa (Lehigh) walked throughout the Lehigh Quarry and Cement Plant site and inspected the condition of the BMPs at the following locations: Quarry Haul Road, Water Treatment System (WTS), West Material Storage Area (WMSA), PCRA 1, Yeager Yard, Rock Plant, Pond 13B, Pond 9, Upper East Material Storage Area (EMSA), and Lower EMSA – in that order. A selection of photos representative of the condition of BMPs throughout the site taken during the March 28 inspection are included.

The main observations documented during the March 28, 2019, inspection of erosion and sediment control BMPs at the Lehigh Cement Plant are as follows:

- The drop inlet sediment basin by the improved existing access road at the Rock Plant was cleared of sediment.
- Sediment and debris clogged the discharge pipe from the drop inlet sediment basin. The pipe was under repair at the time of the inspection.
- Vegetative cover is sufficient over the upper slopes of the Yeager Yard. It is not necessary to maintain the silt fences at the Yeager Yard in areas where the vegetative cover is established.
- The drainage path on the upper slope of the EMSA has been maintained to conduct sediment to the roadside sediment traps.
- At EMSA, vegetative cover began to develop and become established over steep hydroseeded slopes that had previously experienced vegetative cover loss and significant erosion. Once further established, this vegetative cover will reduce the erosion over these slopes.
- Other BMPs are to be maintained following the rainy season: (1) check dams and rock-lined drainage ditches are to be cleared of sediment regularly; or replaced if necessary at the end of the rainy season (2) accumulation of sediment behind silt fences is to be monitored and silt fences maintained to maintain the desired containment of sediment year-round. (3) water bars should monitored and re–established when they wash away.

Signature:

MONTHLY AND POST-RAIN-EVENT INSPECTION REPORT

PROJECT: Lehigh Permanente Quarry: Inspection of Erosion and Sediment Control BMPs
Location: Cupertino, California **DATE:** **March 28, 2019**

PHOTO ID	DESCRIPTION	PHOTO
0328_01	**Status:** **GOOD** **Location**: Quarry Haul Road – From Pond 13B to UTS **PCRA:** 5 and 6 **Observations:** Silt fence line remains in place below previous upper silt fence for containment of the stockpile material on the creekside slope. **Recommendations:** Monitor sediment and debris accumulation behind silt fences.	
0328_02	**Status:** **GOOD** **Location**: Quarry Haul Road – From Pond 13B to UTS **PCRA:** 5 and 6 **Observations:** Roadside berm was remains in place. **Recommendations:** Keep stockpiles away from the berm. Monitor berm condition after rain events.	
0328_03	**Status:** **MONITOR FOR CHANGES** **Location**: Quarry Haul Road – From Pond 13 to UTS **PCRA:** 5 and 6 **Observations:** Pipelines along Haul Road are affecting vegetated slope which may impact silt fences below. **Recommendations:** Monitor silt fences to confirm they are not affected by pipeline or large vegetation nearby.	

Signature:

PROJECT: Lehigh Permanente Quarry: Inspection of Erosion and Sediment Control BMPs
Location: Cupertino, California **DATE:** **March 28, 2019**

0328_04	**Status:GOOD** **Location**: Water Treatment System (WTS) **PCRA:** 2 and 3 **Observations:** Vegetation is maintained below the silt fence. Silt fences remain in place. **Recommendations:** Check silt fences following rain events and confirm that vegetation remains in place to mitigate potential erosion.	
0328_05	**Status:GOOD** **Location**: WMSA **PCRA:** 1 **Observations:** Check dams remain functional and drainage ditches continue to convey stormwater. **Recommendations:** Check sedimentation behind check dams along the Quarry Haul Road towards WMSA.	
0328_06	**Status:** **GOOD** **Location**: WMSA **PCRA:** 1 **Observations:** Silt fences along and below the access road remain in place. Slope below road is largely vegetated. **Recommendations:** Monitor sedimentation behind lower line of silt fences and the silt fence condition after storms.	

Signature:

PROJECT: Lehigh Permanente Quarry: Inspection of Erosion and Sediment Control BMPs
Location: Cupertino, California **DATE:** **March 28, 2019**

0328_07	**Status:GOOD** **Location**: Yeager Yard **PCRA:** 2 and 3 **Observations:** Vegetation from hydroseeding is taking hold on the upper slopes. Silt fences remain in place. **Recommendations:** Check slope following rain events to confirm that vegetation remains in place to mitigate potential erosion.	
0328_08	**Status:** **MONITOR FOR CHANGES** **Location**: Yeager Yard **PCRA:** 2 and 3 **Observations:** Vegetation from hydroseeding is taking hold on the upper slopes. Lower slopes have lost some of the hydroseed vegetative cover. **Recommendations:** Repairs on the lower slope of Yeager Yard may be unsafe.	
0328_09	**Status:** **MONITOR FOR CHANGES** **Location**: Yeager Yard **PCRA:** 2 and 3 **Observations:** Vegetation from hydroseeding is taking hold. Silt fences provide secondary containment in case of vegetative cover loss. **Recommendations:** Silt fences are to be re-assembled in case of vegetative cover loss following rain events.	

Signature:

PROJECT: Lehigh Permanente Quarry: Inspection of Erosion and Sediment Control BMPs
Location: Cupertino, California **DATE:** March 28, 2019

0328_10	**Status:** **MONITOR FOR CHANGES** **Location**: Rock Plant – Improved Existing Access Road **PCRA:** N/A **Observations:** Hydroseeded slope lost some vegetative cover resulting from recent storms. Plastic tarps were installed to minimize erosion. **Recommendations:** Monitor storm flow and erosion along the top of the slope beyond the plastic tarp.	
0328_11	**Status:** **MONITOR FOR CHANGES** **Location**: Rock Plant – Improved Existing Access Road **PCRA:** N/A **Observations:** Rock-lined drainage ditch appeared adequate to reduce flow velocity and retain sediment. **Recommendations:** Clear sediment along the ditch following the rainy season.	
0328_12	**Status:** **MONITOR FOR CHANGES** **Location**: Rock Plant – Improved Existing Access Road **PCRA:** N/A **Observations:** Drop inlet riser intercepts sediment captured through the water bars and roadside drainage ditch. **Recommendations:** Regularly clear sediment from and re-establish rock apron.	

Signature:

0328_13	**Status:** **UNDER REPAIR** **Location**: Rock Plant – Improved Existing Access Road **PCRA:** N/A **Observations:** Sediment level inside the sediment basin was below the pipe invert as the basin had recently been cleared of sediment. **Recommendations:** None at this time.	
0328_14	**Status:** **UNDER REPAIR** **Location**: Rock Plant – Improved Existing Access Road **PCRA:** N/A **Observations:** Discharge pipe is being repaired and cleared of sediment and debris that caused the clogging. **Recommendations:** None at this time.	
0328_15	**Status:** **UNDER REPAIR** **Location**: Rock Plant – Improved Existing Access Road **PCRA:** N/A **Observations:** Discharge pipe is being repaired and cleared of sediment and debris that caused the clogging. **Recommendations:** None at this time.	

Signature:

0328_16	**Status:GOOD** **Location**: Road from Rock Plant to Pond 13B **PCRA:** N/A **Observations:** Check dams appears functional capturing surface flows and retaining sediment. **Recommendations:** Maintain check dams in place, clear sediment regularly.	
0328_17	**Status:** **GOOD** **Location**: Pond 13B **PCRA:** N/A **Observations:** Pond vicinity has good vegetative cover. Straw wattles were replaced even though there is good vegetative cover on the slopes. **Recommendations:** None at this time.	
0328_18	**Status:** **GOOD** **Location**: Pond 13B **PCRA:** N/A **Observations:** Straw wattles were replaced. Silt fences are abandoned due to adequate drainage away from the pond and vegetation on slopes. **Recommendations:** None at this time.	

Signature:

PROJECT: Lehigh Permanente Quarry: Inspection of Erosion and Sediment Control BMPs
Location: Cupertino, California **DATE:** March 28, 2019

0328_19	**Status:GOOD** **Location**: Pond 9 **PCRA:** N/A **Observations:** Straw wattles and hay bales remain in place along the access road to Pond 9. **Recommendations:** Replace straw wattles and hay bales at the end of the rainy season.	
0328_20	**Status:** **MONITOR FOR CHANGES** **Location**: EMSA – Upper Slope **PCRA:** N/A **Observations:** Vegetative growth was re-established after a portion of the slope lost vegetative cover. Silt fence was replaced where sediment overtopped the previous fence. **Recommendations:** Monitor vegetative cover, silt fences, and propagation of rills.	
0328_21	**Status:** **GOOD** **Location**: EMSA – Road **PCRA:** N/A **Observations:** Drainage ditch and rock protection remain operational: sediment is being captured. **Recommendations:** Monitor sediment accumulation along the drainage ditch. Clear sediment from ditch check dams regularly.	

Signature:

PROJECT: Lehigh Permanente Quarry: Inspection of Erosion and Sediment Control BMPs
Location: Cupertino, California **DATE:** March 28, 2019

0328_22	**Status:** **MONITOR FOR CHANGES** **Location**: EMSA – Lower Slope **PCRA:** N/A **Observations:** Vegetative growth was re-established after a portion of the slope lost vegetative cover. Silt fence was replaced where sediment overtopped the previous fence. **Recommendations:** Monitor vegetative cover, silt fences, and propagation of rills.	
0328_23	**Status:** **MONITOR FOR CHANGES** **Location**: EMSA – Lower Slope at Road **PCRA:** N/A **Observations:** Vegetative growth was re-established after a portion of the slope lost vegetative cover. Silt fence was replaced where sediment overtopped the previous fence. **Recommendations:** Monitor vegetative cover, silt fences, and propagation of rills.	
0328_24	**Status:** **MONITOR FOR CHANGES** **Location**: Upper EMSA **PCRA:** N/A **Observations:** Check dams along path to the EMSA Road are retaining sediment satisfactorily. **Recommendations:** Clear sediment or replace check dams regularly, when sediment accumulates above 1/3 of the barrier (check dam) height.	

Signature:

0328_25	**Status:** **GOOD** **Location**: Lower EMSA **PCRA:** N/A **Observations:** Silt fence, straw wattles, and jute matting near Pond 30 and French drain conveyance are in good condition. Lowest line of silt fences, below vegetated slope, remains in place. **Recommendations:** Monitor the condition of the silt fences around Pond 30 after storm events.	
0328_26	**Status:** **GOOD** **Location**: Lower EMSA **PCRA:** N/A **Observations:** Straw wattles and jute matting near Pond 30 and French drain conveyance are in good condition. **Recommendations:** None at this time.	

Signature:

May 1, 2019

VIA EMAIL: Manjunath.Shivalingappa@LehighHanson.com

Mr. Manjunath Shivalingappa
Lehigh Southwest Cement Company–Permanente Plant
24001 Stevens Creek Boulevard
Cupertino, California 95014

Dear Mr. Shivalingappa:

Re: Erosion and Sediment Control Best Management Practices (BMPs) Inspections
April 2019 Monthly Report
Lehigh Southwest Cement Company–Permanente Plant
Cupertino, California

GEI Consultants is pleased to submit the April 2019 Erosion and Sediment Control Best Management Practices (BMPs) Inspection Report regarding the implementation of BMPs at the Lehigh Southwest Cement Company plant in support of condition No. 78 items j and l under the "Hydrology and Water Quality" section of the Final Conditions of Approval from June 7, 2012, which state that the Mine Operator shall:

> "…regularly inspect all storm water and erosion controls, especially before and following qualifying rain events. Inspections shall be documented and periodically reported. Any violations shall be corrected immediately." And,
>
> "Ensure that all storm water, erosion, and sediment control BMPs are installed, inspected, maintained, and repaired under the direction of either a California certified engineer, geologist, or landscape architect, a registered professional hydrologist, or a certified erosion control specialist."

GEI Consultants inspected the existing erosion and sediment control BMPs at the Lehigh Southwest Cement Company plant before and after the qualifying rain events in April. A qualifying rain event is defined as "any event that produces 0.5 inches of precipitation or more with a 48-hour or greater period between rain events" (Construction General Permit, 2009-0009-DWQ).

The Lehigh Cement Quarry weather station logged a cumulative measurement of 0.1 inches of rain between April 1 and April 30 accounting for no qualifying rain events. Without any qualifying rain events during April, GEI Consultants performed a monthly inspection in April:

April 19, 2019: Monthly Inspection

As part of the inspection, the BMPs onsite were observed and evaluated for performance. A summary of the inspection findings, BMPs' deficiencies, and recommendations based on the

observations from the inspection can be found in the attached Daily Field Report (DFR). A Site Map detailing the location of the BMPs' deficiencies observed is included with this report.

BMPs Deficiencies and Recommendations

Based on the observations from the April 2019 inspection, BMPs at the Lehigh SW Co. Permanente Plant are generally functional and, collectively, in good condition. BMPs identified as deficient were assigned a status of "Work Needed" in the DFRs. Some repairs associated with deficiencies identified in February 2019 at the Rock Plant remained under construction at the time of the April inspection. These repairs resulted from sediment and debris clogging the sediment basin discharge pipe line and the required replacement of a pipe segment. Recommendations of repairs to address the BMPs' deficiencies and other vulnerabilities identified during the April 2019 inspections are included in the DFR.

One deficiency in BMPs was assigned a status of "Work Needed" in the April 2019 inspection DFR and continues to be tracked in Table 1 below. This deficiency was identified during the inspections in February 2019 and continue to be track since it had not been addressed in whole at the time of the April inspection. Table 1 presents a brief summary of the location, status, and recommendations for the areas where the deficiencies in the implementation of erosion and sediment control BMPs were identified.

Table 1. BMPs Inspection Overview of Deficient Areas[1]

BMPs Deficiency No.	Inspection Date	Repairs Completed by Inspection Date	DFR Photo ID	Location[1]	Status	Recommendations and Comments
2 **(1 of 2 deficiencies tracked in March)**	01/22/2019 02/08/2019 02/25/2019 ——— 03/11/2019 ——— 03/28/2019 ——— 04/19/2019	Discharge pipe under repair to remove the sediment and debris clogging the pipe.	0419_13 0419_14 0419_15	Rock Plant–Improved Existing Access Road	Sediment basin was cleared of sediment ——— Discharge pipe Under Repair	Sediment basin was cleared of sediment below the discharge pipe invert level prior to the 03/11/2019 inspection. ——— Repairs continued to remove the sediment and debris from inside the pipe, and to replace a clogged pipe segment.

[1] Review attached DFR and Site Map for photos and specific location

We recommend that Lehigh Southwest Cement Company re-establish BMPs that are to remain functional throughout the plant at the end of the rainy season. We recommend that Lehigh Cement Co. continue to monitor the silt fences and other BMPs assigned a status of "MONITOR FOR CHANGES" year-round, beyond the rainy season.

Table 1 and the recommendations hereby included are intended to be used by Lehigh staff to monitor the condition and performance of erosion and sediment control BMPs, and to address the recommended corrective actions to the BMPs' deficiencies.

If you have any questions, please feel free to contact Hugo Velasquez at (510) 350-2905 or Chris Kissick at (916) 631-4527.

Sincerely,

Hugo Velasquez, P.E., QSP
Project Engineer

Chris Kissick, P.E., QSD/QSP
Quality Control Engineer

GEI CONSULTANTS, INC.

cc: Mrs. Cindy Davis, Mr. Chris Kissick, and Ms. Faith Moore.

Site Map

SITE MAP

April 2019 Inspection

Daily Inspection Reports

GEI Consultants

MONTHLY AND POST-RAIN-EVENT INSPECTION REPORT

PROJECT: Lehigh Permanente Quarry: Inspection of Erosion and Sediment Control BMPs
Location: Cupertino, California **DATE:** April 19, 2019

GEI PROJECT # 1804336
OWNER: Lehigh Southwest Cement Co.
CLIENT: Lehigh Southwest Cement Co.
OBSERVATIONS REPORTED TO: Manjunath Shivalingappa
DAILY FIELD REPORT NO.: 10
GEI PROJECT MANAGER: Cindy Davis
REVIEWED BY: Chris Kissick
DATE REVIEWED: 05/01/2019

ENGINEER/GEOLOGIST: Hugo Velasquez
DAY OF WEEK: Friday
TIME ARRVIED: 08:30
TIME DEPARTED: 12:00
TRAVEL TIME (hours): 2.5
TOTAL TIME (hours): 6.0
TEMPERATURE: - **AM** 60s-70s **PM**
WEATHER: ☒ Clear ☐ Rain ☐ Overcast ☐ Fog ☐ Wind ☐ Other:

ATTACHMENTS: ☒ Site Map ☐ Field Sketches ☐ Other(s)

Staff on site:	Organization:
Manjunath Shivalingappa	Lehigh Southwest Cement
Hugo Velasquez	GEI Consultants

Task Overview:

GEI is on-site to conduct the inspection of storm water, erosion, and sediment control BMPs of active and inactive reclamation areas within the Reclamation Plan Amendment (RPA) boundary at the Lehigh Permanente Quarry. Within the RPA boundary, the Permanente Creek Reclamation Area (PCRA) is divided into 7 sub-areas identified as PCRA 1 through 7 on the site map. Erosion and sediment control BMPs are located throughout the quarry and cement plant site, and at each of the PCRAs.

Inspection Summary:

During the inspection on April 19, 2019, Hugo Velasquez (GEI) and Manjunath Shivalingappa (Lehigh) walked throughout the Lehigh Quarry and Cement Plant site and inspected the condition of the BMPs at the following locations: Rock Plant, Pond 13B, Pond 9, Quarry Haul Road, Water Treatment System, West Material Storage Area (WMSA), PCRA 1, Yeager Yard, Upper East Material Storage Area (EMSA), and Lower EMSA – in that order. A selection of photos representative of the condition of BMPs throughout the site taken during the April 19 inspection are included.

The main observations documented during the April 19, 2019, inspection of erosion and sediment control BMPs at the Lehigh Cement Plant are as follows:

- The drop inlet sediment basin by the improved existing access road at the Rock Plant was cleared of sediment.
- Sediment and debris clogged the discharge pipe from the drop inlet sediment basin. The pipe remained under repair at the time of the inspection.
- Vegetative cover is sufficient over the upper slopes of the Yeager Yard. It is not necessary to maintain the silt fences at the Yeager Yard in areas where the vegetative cover is established.
- The drainage path on the upper slope of the EMSA has been maintained to conduct sediment to the roadside sediment traps.
- At EMSA, vegetative cover began to develop and become established over steep hydroseeded slopes that had previously experienced vegetative cover loss and significant erosion. Once further established, this vegetative cover will reduce the erosion over these slopes.
- Other BMPs are to be maintained following the rainy season: (1) check dams and rock-lined drainage ditches are to be cleared of sediment regularly; or replaced if necessary at the end of the rainy season (2) accumulation of sediment behind silt fences is to be monitored and silt fences maintained to maintain the desired containment of sediment year-round. (3) water bars should monitored and re–established when they wash away.

Signature:

MONTHLY AND POST-RAIN-EVENT INSPECTION REPORT

PROJECT: Lehigh Permanente Quarry: Inspection of Erosion and Sediment Control BMPs
Location: Cupertino, California **DATE:** **April 19, 2019**

PHOTO ID	DESCRIPTION	PHOTO
0419_01	**Status:** **GOOD** **Location**: Quarry Haul Road – From Pond 13B to UTS **PCRA:** 5 and 6 **Observations:** Silt fence line remains in place below previous upper silt fence for containment of the stockpile material on the creekside slope. **Recommendations:** Monitor sediment and debris accumulation behind silt fences.	
0419_02	**Status:** **GOOD** **Location**: Quarry Haul Road – From Pond 13B to UTS **PCRA:** 5 and 6 **Observations:** Roadside berm was remains in place. **Recommendations:** Keep stockpiles away from the berm. Monitor berm condition after rain events.	
0419_03	**Status:** **MONITOR FOR CHANGES** **Location**: Quarry Haul Road – From Pond 13 to Water Treatment System (WTS) **PCRA:** 5 and 6 **Observations:** Pipelines along Haul Road are affecting vegetated slope which may impact silt fences below. **Recommendations:** Monitor silt fences to confirm they are not affected by pipeline or large vegetation nearby.	

Signature:

PROJECT: Lehigh Permanente Quarry: Inspection of Erosion and Sediment Control BMPs
Location: Cupertino, California **DATE:** April 19, 2019

0419_04	**Status:GOOD** **Location**: Water Treatment System (WTS) **PCRA:** 2 and 3 **Observations:** Vegetation is maintained below the silt fence. Silt fences remain in place. **Recommendations:** Check silt fences following rain events and confirm that vegetation remains in place to mitigate potential erosion.	
0419_05	**Status:GOOD** **Location**: WMSA **PCRA:** 1 **Observations:** Check dams remain functional and drainage ditches continue to convey stormwater. **Recommendations:** Check sedimentation behind check dams along the Quarry Haul Road towards WMSA.	
0419_06	**Status:** **GOOD** **Location**: WMSA **PCRA:** 1 **Observations:** Silt fences along and below the access road remain in place. Slope below road is largely vegetated. **Recommendations:** Monitor sedimentation behind lower line of silt fences and the silt fence condition after storms.	

Signature:

PROJECT: Lehigh Permanente Quarry: Inspection of Erosion and Sediment Control BMPs
Location: Cupertino, California **DATE:** April 19, 2019

0419_07	**Status:GOOD** **Location**: Yeager Yard **PCRA:** 2 and 3 **Observations:** Vegetation from hydroseeding is taking hold on the upper slopes. Silt fences remain in place. **Recommendations:** Check slope following rain events to confirm that vegetation remains in place to mitigate potential erosion.	
0419_08	**Status:** **MONITOR FOR CHANGES** **Location**: Yeager Yard **PCRA:** 2 and 3 **Observations:** Vegetation from hydroseeding is taking hold on the upper slopes. Lower slopes have lost some of the hydroseed vegetative cover. **Recommendations:** Repairs on the lower slope of Yeager Yard may be unsafe.	
0419_09	**Status:** **MONITOR FOR CHANGES** **Location**: Yeager Yard **PCRA:** 2 and 3 **Observations:** Vegetation from hydroseeding is taking hold. Silt fences provide secondary containment in case of vegetative cover loss. **Recommendations:** Silt fences are to be re-assembled in case of vegetative cover loss following rain events.	

Signature:

0419_10	**Status:** **MONITOR FOR CHANGES** **Location**: Rock Plant – Improved Existing Access Road **PCRA:** N/A **Observations:** Hydroseeded slope lost some vegetative cover resulting from recent storms. Plastic tarps were installed to minimize erosion. **Recommendations:** Monitor storm flow and erosion along the top of the slope beyond the plastic tarp.	
0419_11	**Status:** **MONITOR FOR CHANGES** **Location**: Rock Plant – Improved Existing Access Road **PCRA:** N/A **Observations:** Rock-lined drainage ditch appeared adequate to reduce flow velocity and retain sediment. **Recommendations:** Clear sediment along the ditch following the rainy season.	
0419_12	**Status:** **MONITOR FOR CHANGES** **Location**: Rock Plant – Improved Existing Access Road **PCRA:** N/A **Observations:** Drop inlet riser intercepts sediment captured through the water bars and roadside drainage ditch. **Recommendations:** Regularly clear sediment from and re-establish rock apron.	

Signature:

PROJECT: Lehigh Permanente Quarry: Inspection of Erosion and Sediment Control BMPs
Location: Cupertino, California **DATE:** April 19, 2019

0419_13	**Status:** **UNDER REPAIR** **Location**: Rock Plant – Improved Existing Access Road **PCRA:** N/A **Observations:** Sediment level inside the sediment basin was below the pipe invert as the basin had recently been cleared of sediment. **Recommendations:** None at this time.	
0419_14	**Status:** **UNDER REPAIR** **Location**: Rock Plant – Improved Existing Access Road **PCRA:** N/A **Observations:** Discharge pipe is being repaired and cleared of sediment and debris that caused the clogging. A lower segment of the discharge pipe was being replaced. **Recommendations:** None at this time.	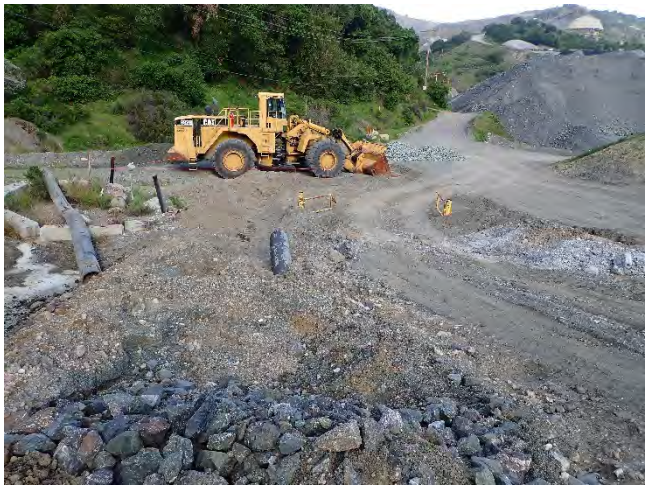
0419_15	**Status:** **UNDER REPAIR** **Location**: Rock Plant – Improved Existing Access Road **PCRA:** N/A **Observations:** Discharge pipe is being repaired and cleared of sediment and debris that caused the clogging. A lower segment of the discharge pipe was being replaced. **Recommendations:** None at this time.	

Signature:

PROJECT: Lehigh Permanente Quarry: Inspection of Erosion and Sediment Control BMPs
Location: Cupertino, California **DATE:** April 19, 2019

0419_16	**Status:GOOD** **Location**: Road from Rock Plant to Pond 13B **PCRA:** N/A **Observations:** Check dams appears functional capturing surface flows and retaining sediment. **Recommendations:** Maintain check dams in place, clear sediment regularly.	
0419_17	**Status:** **GOOD** **Location**: Pond 13B **PCRA:** N/A **Observations:** Pond vicinity has good vegetative cover. Straw wattles were replaced even though there is good vegetative cover on the slopes. **Recommendations:** None at this time.	
0419_18	**Status:** **GOOD** **Location**: Pond 13B **PCRA:** N/A **Observations:** Straw wattles were replaced. Silt fences are abandoned due to adequate drainage away from the pond and vegetation on slopes. **Recommendations:** None at this time.	

Signature:

PROJECT: Lehigh Permanente Quarry: Inspection of Erosion and Sediment Control BMPs
Location: Cupertino, California **DATE:** **April 19, 2019**

0419_19	**Status:GOOD** **Location**: Pond 9 **PCRA:** N/A **Observations:** Straw wattles and hay bales remain in place along the access road to Pond 9. **Recommendations:** Replace straw wattles and hay bales at the end of the rainy season.	
0419_20	**Status:** **MONITOR FOR CHANGES** **Location**: EMSA – Upper Slope **PCRA:** N/A **Observations:** Vegetative growth was re-established after a portion of the slope lost vegetative cover. Silt fence was replaced where sediment overtopped the previous fence. **Recommendations:** Monitor vegetative cover, silt fences, and propagation of rills.	
0419_21	**Status:** **GOOD** **Location**: EMSA – Road **PCRA:** N/A **Observations:** Drainage ditch and rock protection remain operational: sediment is being captured. **Recommendations:** Monitor sediment accumulation along the drainage ditch. Clear sediment from ditch check dams regularly.	

Signature:

PROJECT: Lehigh Permanente Quarry: Inspection of Erosion and Sediment Control BMPs
Location: Cupertino, California **DATE:** April 19, 2019

0419_22	**Status:** **MONITOR FOR CHANGES** **Location**: EMSA – Lower Slope **PCRA:** N/A **Observations:** Vegetative growth was re-established after a portion of the slope lost vegetative cover. Silt fence was replaced where sediment overtopped the previous fence. **Recommendations:** Monitor vegetative cover, silt fences, and propagation of rills.	
0419_23	**Status:** **MONITOR FOR CHANGES** **Location**: EMSA – Lower Slope at Road **PCRA:** N/A **Observations:** Vegetative growth was re-established after a portion of the slope lost vegetative cover. Silt fence was replaced where sediment overtopped the previous fence. **Recommendations:** Monitor vegetative cover, silt fences, and propagation of rills.	
0419_24	**Status:** **MONITOR FOR CHANGES** **Location**: Upper EMSA **PCRA:** N/A **Observations:** Check dams along path to the EMSA Road are retaining sediment satisfactorily. **Recommendations:** Clear sediment or replace check dams regularly, when sediment accumulates above 1/3 of the barrier (check dam) height.	

Signature:

PROJECT: Lehigh Permanente Quarry: Inspection of Erosion and Sediment Control BMPs
Location: Cupertino, California **DATE:** **April 19, 2019**

0419_25	**Status:** **GOOD** **Location**: Lower EMSA **PCRA:** N/A **Observations:** Silt fence, straw wattles, and jute matting near Pond 30 and French drain conveyance are in good condition. Lowest line of silt fences, below vegetated slope, remains in place. **Recommendations:** Monitor the condition of the silt fences around Pond 30 after storm events.	
0419_26	**Status:** **GOOD** **Location**: Lower EMSA **PCRA:** N/A **Observations:** Straw wattles and jute matting near Pond 30 and French drain conveyance are in good condition. **Recommendations:** None at this time.	

Signature:

June 17, 2019

VIA EMAIL: Manjunath.Shivalingappa@LehighHanson.com

Mr. Manjunath Shivalingappa
Lehigh Southwest Cement Company–Permanente Plant
24001 Stevens Creek Boulevard
Cupertino, California 95014

Dear Mr. Shivalingappa:

Re: Erosion and Sediment Control Best Management Practices (BMPs) Inspections
May 2019 Monthly Report
Lehigh Southwest Cement Company–Permanente Plant
Cupertino, California

GEI Consultants is pleased to submit the May 2019 Erosion and Sediment Control Best Management Practices (BMPs) Inspection Report regarding the implementation of BMPs at the Lehigh Southwest Cement Company plant in support of condition No. 78 items j and l under the "Hydrology and Water Quality" section of the Final Conditions of Approval from June 7, 2012, which state that the Mine Operator shall:

> "…regularly inspect all storm water and erosion controls, especially before and following qualifying rain events. Inspections shall be documented and periodically reported. Any violations shall be corrected immediately." And,
>
> "Ensure that all storm water, erosion, and sediment control BMPs are installed, inspected, maintained, and repaired under the direction of either a California certified engineer, geologist, or landscape architect, a registered professional hydrologist, or a certified erosion control specialist."

GEI Consultants inspected the existing erosion and sediment control BMPs at the Lehigh Southwest Cement Company plant once since there were no qualifying rain events during the month of May 2019. A qualifying rain event is defined as "any event that produces 0.5 inches of precipitation or more with a 48-hour or greater period between rain events" (Construction General Permit, 2009-0009-DWQ).

Without any qualifying rain events during May 2019, GEI Consultants performed a single inspection *May 30, 2019* as the monthly inspection.

As part of the inspection, the BMPs onsite were observed and evaluated for performance. A summary of the inspection findings, BMPs' deficiencies, and recommendations based on the observations from the inspection can be found in the attached Daily Field Report (DFR). A Site Map detailing the location of the BMPs' deficiencies previously observed and resolved during May 2019 is included with this report.

BMPs Deficiencies and Recommendations

Based on the observations from the May 2019 inspection, BMPs at the Lehigh SW Co. Permanente Plant are generally functional and, collectively, in good condition. No deficiencies were encountered during the May 2019 inspection.

Repairs associated with deficiencies identified in early 2019 at the Rock Plant were completed following the April 2019 inspection. One deficiency in BMPs was assigned a status of "Work Needed" in the April 2019 inspection report and remained tracked in Table 1 below to note that the repairs were completed. These repairs included the removal of sediment and debris clogging the sediment basin discharge pipe line and the replacement of a pipe segment with a riprap apron and swale at the point of discharge.

Table 1 presents a brief summary of the location, status, and recommendations for the Rock Plant area, where the implementation of erosion and sediment control BMPs was identified as deficient.

Table 1. BMPs Inspection Overview of Deficient Areas[1]

BMPs Deficiency No.	Inspection Date	Repairs Completed by Inspection Date	DFR Photo ID	Location[1]	Status	Recommendations and Comments
2 **(1 of 2 deficiencies tracked in March)**	01/22/2019	05/30/2019	0530_09 0530_10 0530_11 0530_12	Rock Plant– Improved Existing Access Road	Repairs completed	Repairs to remove the debris and to replace a clogged pipe segment were completed.

[1] Review attached DFR and Site Map for photos and specific location

We recommend that Lehigh Cement Co. continue to monitor the silt fences and other BMPs assigned a status of "MONITOR FOR CHANGES" year-round. We recommend that Lehigh Southwest Cement Company re-establish BMPs that are to remain functional throughout the plant ahead of November, when the rainy season typically begins.

The recommendations included in the DFR are intended to be used by Lehigh staff to monitor the condition and performance of erosion and sediment control BMPs, and to address the recommended maintenance actions to minimize deficiencies in BMPs.

If you have any questions, please feel free to contact Hugo Velasquez at (510) 350-2905 or Chris Kissick at (916) 631-4527.

Sincerely,

Hugo Velasquez, P.E., QSP
Project Engineer

Chris Kissick, P.E., QSD/QSP
Quality Control Engineer

GEI CONSULTANTS, INC.

cc: Mrs. Cindy Davis, Mr. Chris Kissick.

Site Map

SITE MAP

May 2019 Inspection

Daily Inspection Reports

MONTHLY INSPECTION REPORT

PROJECT: Lehigh Permanente Quarry: Inspection of Erosion and Sediment Control BMPs
Location: Cupertino, California **DATE:** May 30, 2019

GEI PROJECT # 1804336
OWNER: Lehigh Southwest Cement Co.
CLIENT: Lehigh Southwest Cement Co.
OBSERVATIONS REPORTED TO: Manjunath Shivalingappa
DAILY FIELD REPORT NO.: 11
GEI PROJECT MANAGER: Cindy Davis
REVIEWED BY: Chris Kissick
DATE REVIEWED: 06/17/2019

ENGINEER/GEOLOGIST: Hugo Velasquez
DAY OF WEEK: Thursday
TIME ARRVIED: 08:30
TIME DEPARTED: 11:00
TRAVEL TIME (hours): 2.5
TOTAL TIME (hours): 5.0
TEMPERATURE: - **AM** 60s-70s **PM**
WEATHER: ☐ Clear ☐ Rain ☒ Overcast ☐ Fog ☐ Wind ☐ Other:

ATTACHMENTS: ☒ Site Map ☐ Field Sketches ☐ Other(s)

Staff on site:	Organization:
Manjunath Shivalingappa	Lehigh Southwest Cement
Hugo Velasquez	GEI Consultants

Task Overview:

GEI is on-site to conduct the inspection of storm water, erosion, and sediment control BMPs of active and inactive reclamation areas within the Reclamation Plan Amendment (RPA) boundary at the Lehigh Permanente Quarry. Within the RPA boundary, the Permanente Creek Reclamation Area (PCRA) is divided into 7 sub-areas identified as PCRA 1 through 7 on the site map. Erosion and sediment control BMPs are located throughout the quarry and cement plant site, and at each of the PCRAs.

Inspection Summary:

During the inspection on May 30, 2019, Hugo Velasquez (GEI) and Manjunath Shivalingappa (Lehigh) walked throughout the Lehigh Quarry and Cement Plant site and inspected the condition of the BMPs at the following locations:

Upper East Material Storage Area (EMSA), Rock Plant, Quarry Haul Road, Water Treatment System, West Material Storage Area (WMSA), Yeager Yard, PCRA 1, and Lower EMSA – in that order. A selection of photos representative of the condition of BMPs throughout the site taken during the May 30 inspection are included.

The main observations documented during the May 30, 2019, inspection of erosion and sediment control BMPs at the Lehigh Cement Plant are as follows:

- The drop inlet sediment basin by the improved existing access road at the Rock Plant was cleared of sediment.
- Sediment and debris clogged the discharge pipe from the drop inlet sediment basin. The repairs were completed and a segment of the pipe was replaced prior to the inspection.
- Vegetative cover is present over the upper slopes of the Yeager Yard. It is not necessary to maintain the silt fences at the Yeager Yard in areas where the vegetative cover is established.
- The drainage path on the upper slope of the EMSA has been maintained to conduct sediment to the roadside sediment traps.
- Earth placement and track-compaction are taking place over the upper slope at the EMSA. Vegetative cover on the slopes below the earth placement
- At EMSA, vegetative cover began to develop and become established over steep hydroseeded slopes that had previously experienced vegetative cover loss and significant erosion. Once further established, this vegetative cover will reduce the erosion over these slopes.
- Other BMPs are to be maintained following the rainy season: (1) check dams and rock-lined drainage ditches are to be cleared of sediment regularly; or replaced if necessary at the end of the rainy season (2) accumulation of sediment behind silt fences is to be monitored and silt fences maintained to maintain the desired containment of sediment year-round. (3) water bars should monitored and re–established when they wash away.

Signature:

MONTHLY INSPECTION REPORT

PROJECT: Lehigh Permanente Quarry: Inspection of Erosion and Sediment Control BMPs
Location: Cupertino, California **DATE:** **May 30, 2019**

PHOTO ID	DESCRIPTION	PHOTO
0530_01	**Status:** **GOOD** **Location**: Quarry Haul Road – From Pond 13B to UTS **PCRA:** 5 and 6 **Observations:** Silt fence line remains in place below previous upper silt fence for containment of the stockpile material on the creekside slope. **Recommendations:** Monitor sediment and debris accumulation behind silt fences.	
0530_02	**Status:** **GOOD** **Location**: Quarry Haul Road – From Pond 13B to UTS **PCRA:** 5 and 6 **Observations:** Roadside berm was remains in place. **Recommendations:** Keep stockpiles away from the berm. Monitor berm condition after rain events.	
0530_03	**Status:** **MONITOR FOR CHANGES** **Location**: Quarry Haul Road – From Pond 13 to Water Treatment System (WTS) **PCRA:** 5 and 6 **Observations:** Pipelines along Haul Road are affecting vegetated slope which may impact silt fences below. **Recommendations:** Monitor silt fences to confirm they are not affected by pipeline or large vegetation nearby.	

Signature:

MONTHLY INSPECTION REPORT

PROJECT: Lehigh Permanente Quarry: Inspection of Erosion and Sediment Control BMPs
Location: Cupertino, California **DATE:** **May 30, 2019**

0530_04	**Status:GOOD** **Location**: Water Treatment System (WTS) **PCRA:** 2 and 3 **Observations:** Vegetation is maintained below the silt fence. Silt fences remain in place. **Recommendations:** Check silt fences following rain events and confirm that vegetation remains in place to mitigate potential erosion.	
0530_05	**Status:GOOD** **Location**: Yeager Yard **PCRA:** 2 and 3 **Observations:** Vegetation from hydroseeding is taking hold on the upper slopes. Silt fences remain in place. **Recommendations:** Check slope following rain events to confirm that vegetation remains in place to mitigate potential erosion.	
0530_06	**Status:** **MONITOR FOR CHANGES** **Location**: Yeager Yard **PCRA:** 2 and 3 **Observations:** Vegetation from hydroseeding is taking hold on the upper slopes. Lower slopes have lost some of the hydroseed vegetative cover. **Recommendations:** Repairs on the lower slope of Yeager Yard may be unsafe.	

Signature:

MONTHLY INSPECTION REPORT

PROJECT: Lehigh Permanente Quarry: Inspection of Erosion and Sediment Control BMPs
Location: Cupertino, California **DATE:** **May 30, 2019**

0530_07	**Status:** **MONITOR FOR CHANGES** **Location**: Below Yeager Yard **PCRA:** 2 and 3 **Observations:** Sediment originating at the existing seep is intercepted in sediment basin below Yeager Yard formed by a perimeter berm around the basin. **Recommendations:** Sediment basin is to be cleared of sediment and debris regularly.	
0530_08	**Status:** **MONITOR FOR CHANGES** **Location**: Rock Plant – Improved Existing Access Road **PCRA:** N/A **Observations:** Hydroseeded slope lost some vegetative cover resulting from recent storms. Plastic tarps were installed to minimize erosion. **Recommendations:** Monitor storm flow and erosion along the top of the slope beyond the plastic tarp.	
0530_09	**Status:** **MONITOR FOR CHANGES** **Location**: Rock Plant – Improved Existing Access Road **PCRA:** N/A **Observations:** Rock-lined drainage ditch appeared adequate to reduce flow velocity and retain sediment. **Recommendations:** Clear sediment along the ditch following the rainy season.	

Signature:

MONTHLY INSPECTION REPORT

PROJECT: Lehigh Permanente Quarry: Inspection of Erosion and Sediment Control BMPs
Location: Cupertino, California **DATE:** **May 30, 2019**

0530_10	**Status:** **MONITOR FOR CHANGES** **Location**: Rock Plant – Improved Existing Access Road **PCRA:** N/A **Observations:** Drop inlet riser intercepts sediment captured through the water bars and roadside drainage ditch. **Recommendations:** Regularly clear sediment from and re-establish rock apron.	
0530_11	**Status:** **REPAIRS COMPLETED** **Location**: Rock Plant – Improved Existing Access Road **PCRA:** N/A **Observations:** Sediment level inside the sediment basin was below the pipe invert as the basin had recently been cleared of sediment. **Recommendations:** None at this time.	
0530_12	**Status:** **REPAIRS COMPLETED** **Location**: Rock Plant – Improved Existing Access Road **PCRA:** N/A **Observations:** Discharge pipe is being repaired and cleared of sediment and debris that caused the clogging. A lower segment of the discharge pipe was being replaced. **Recommendations:** None at this time.	

Signature:

0530_13	**Status:** **MONITOR FOR CHANGES** **Location**: EMSA – Upper Slope **PCRA:** N/A **Observations:** Earth placement and track compaction is taking place over the upper slope. **Recommendations:** Monitor sediment accumulation along the drainage ditch and silt fence below earth placement area.	
0530_14	**Status:** **GOOD** **Location**: Lower EMSA **PCRA:** N/A **Observations:** Silt fence, straw wattles, and jute matting near Pond 30 and French drain conveyance are in good condition. Lowest line of silt fences, below vegetated slope, remains in place. **Recommendations:** Monitor the condition of the silt fences around Pond 30 regularly.	
0530_15	**Status:** **GOOD** **Location**: Lower EMSA **PCRA:** N/A **Observations:** Straw wattles and jute matting near Pond 30 and French drain conveyance are in good condition. **Recommendations:** None at this time.	

Signature:

July 8, 2019

VIA EMAIL: Manjunath.Shivalingappa@LehighHanson.com

Mr. Manjunath Shivalingappa
Lehigh Southwest Cement Company–Permanente Plant
24001 Stevens Creek Boulevard
Cupertino, California 95014

Dear Mr. Shivalingappa:

Re: Erosion and Sediment Control Best Management Practices (BMPs) Inspections
June 2019 Monthly Report
Lehigh Southwest Cement Company–Permanente Plant
Cupertino, California

GEI Consultants is pleased to submit the June 2019 Erosion and Sediment Control Best Management Practices (BMPs) Inspection Report regarding the implementation of BMPs at the Lehigh Southwest Cement Company plant in support of condition No. 78 items j and l under the "Hydrology and Water Quality" section of the Final Conditions of Approval from June 7, 2012, which state that the Mine Operator shall:

> "…regularly inspect all storm water and erosion controls, especially before and following qualifying rain events. Inspections shall be documented and periodically reported. Any violations shall be corrected immediately." And,
>
> "Ensure that all storm water, erosion, and sediment control BMPs are installed, inspected, maintained, and repaired under the direction of either a California certified engineer, geologist, or landscape architect, a registered professional hydrologist, or a certified erosion control specialist."

GEI Consultants inspected the erosion and sediment control BMPs at the Lehigh Southwest Cement Company plant once since there were no qualifying rain events during June 2019. A qualifying rain event is defined as "any event that produces 0.5 inches of precipitation or more with a 48-hour or greater period between rain events" (Construction General Permit, 2009-0009-DWQ). Without any qualifying rain events during June 2019, GEI Consultants performed a single inspection *June 25, 2019* as the monthly inspection of BMPs.

As part of the inspection, the BMPs onsite were observed and evaluated for performance. A summary of the inspection findings, BMPs' deficiencies, and recommendations based on the observations from the inspection can be found in the attached Daily Field Report (DFR). A Site Map identifying the various locations of the BMPs inspected on June 25th is included with this report.

BMPs Deficiencies and Recommendations

Based on the observations from the June 2019 inspection, BMPs at the Lehigh SW Co. Permanente Plant are generally functional and, collectively, in good condition. No deficiencies were encountered during the June 2019 inspection.

We recommend that Lehigh Cement Co. continue to monitor the silt fences and other BMPs assigned a status of "MONITOR FOR CHANGES" year-round. We recommend that Lehigh Southwest Cement Company re-establish and perform maintenance on all BMPs that are to remain functional ahead of the rainy season, which typically begins in November.

The recommendations included in the DFR are intended to be used by Lehigh staff to monitor the condition and performance of erosion and sediment control BMPs, and to address the recommended maintenance actions to minimize deficiencies in BMPs.

If you have any questions, please feel free to contact Hugo Velasquez at (510) 350-2905 or Chris Kissick at (916) 631-4527.

Sincerely,

Hugo Velasquez, P.E., QSP
Project Engineer

Chris Kissick, P.E., QSD/QSP
Quality Control Engineer

GEI CONSULTANTS, INC.

cc: Mrs. Cindy Davis, Mr. Chris Kissick.

Site Map

SITE MAP

June 2019 Inspection

Daily Inspection Reports

GEI Consultants

MONTHLY INSPECTION REPORT

PROJECT: Lehigh Permanente Quarry: Inspection of Erosion and Sediment Control BMPs
Location: Cupertino, California **DATE:** June 25, 2019

GEI PROJECT # 1804336
OWNER: Lehigh Southwest Cement Co.
CLIENT: Lehigh Southwest Cement Co.
OBSERVATIONS REPORTED TO: Manjunath Shivalingappa
DAILY FIELD REPORT NO.: 12
GEI PROJECT MANAGER: Cindy Davis
REVIEWED BY: Chris Kissick
DATE REVIEWED: 07/08/2019

ENGINEER/GEOLOGIST: Hugo Velasquez
DAY OF WEEK: Tuesday
TIME ARRVIED: 08:30
TIME DEPARTED: 10:30
TRAVEL TIME (hours): 2.5
TOTAL TIME (hours): 4.5
TEMPERATURE: - **AM** 60s-70s **PM**
WEATHER: ☒ Clear ☐ Rain ☐ Overcast ☐ Fog ☐ Wind ☐ Other:

ATTACHMENTS: ☒ Site Map ☐ Field Sketches ☐ Other(s)

Staff on site:	Organization:
Manjunath Shivalingappa	Lehigh Southwest Cement
Hugo Velasquez	GEI Consultants

Task Overview:

GEI is on-site to conduct the inspection of storm water, erosion, and sediment control BMPs of active and inactive reclamation areas within the Reclamation Plan Amendment (RPA) boundary at the Lehigh Permanente Quarry. Within the RPA boundary, the Permanente Creek Reclamation Area (PCRA) is divided into 7 sub-areas identified as PCRA 1 through 7 on the site map. Erosion and sediment control BMPs are located throughout the quarry and cement plant site, and at each of the PCRAs.

Inspection Summary:

During the inspection on June 25, 2019, Hugo Velasquez (GEI) and Manjunath Shivalingappa (Lehigh) walked throughout the Lehigh quarry and cement plant site and inspected the condition of the BMPs at the following locations: Lower East Material Storage Area (EMSA), Upper EMSA, Quarry Haul Road, Yeager Yard, PCRA 1, West Material Storage Area (WMSA), Pond 13B, and Rock Plant – in that order. A selection of photos representative of the condition of BMPs throughout the site taken during the inspection on June 25th are included.

The main observations documented during the June 25, 2019, inspection of erosion and sediment control BMPs at the Lehigh Cement Plant are as follows:

- The drop inlet sediment basin by the improved existing access road at the Rock Plant was clear of sediment.
- The discharge pipe from the drop inlet sediment basin at the Rock Plant was clear of sediment and debris after repairs were completed.
- Vegetative cover is present over the upper slopes of the Yeager Yard. It is not necessary to maintain the silt fences at the Yeager Yard in areas where the vegetative cover is established.
- The drainage path on the upper slope of the EMSA has been maintained to conduct sediment to the roadside sediment traps.
- Topsoil placement and track-compaction are taking place over the upper slope at the EMSA. Vegetative cover is present on the slopes below the areas of topsoil placement.
- At EMSA, vegetative cover continues to develop and become established over steep hydroseeded slopes that had previously experienced vegetative cover loss and significant erosion. Once further established, this vegetative cover will reduce the erosion over these slopes.
- Other BMPs are to be maintained following the rainy season: (1) check dams and rock-lined drainage ditches are to be cleared of sediment regularly; or replaced if necessary before the beginning of the next rainy season (2) accumulation of sediment behind silt fences is to be monitored and silt fences maintained for containment of sediment year-round. (3) water bars should be monitored and re–established when they wash away.

Signature:

GEI Consultants

MONTHLY INSPECTION REPORT

PROJECT: Lehigh Permanente Quarry: Inspection of Erosion and Sediment Control BMPs
Location: Cupertino, California **DATE:** **June 25, 2019**

PHOTO ID	DESCRIPTION	PHOTO
0625_01	**Status:** **GOOD** **Location**: Quarry Haul Road – From Pond 13B to UTS **PCRA:** 5 and 6 **Observations:** Silt fence line remains in place below previous upper silt fence for containment of the stockpile material on the creekside slope. **Recommendations:** Monitor sediment and debris accumulation behind silt fences.	
0625_02	**Status:** **GOOD** **Location**: Quarry Haul Road – From Pond 13B to UTS **PCRA:** 5 and 6 **Observations:** Roadside berm was remains in place. **Recommendations:** Keep stockpiles away from the berm. Monitor berm condition after rain events.	
0625_03	**Status:** **MONITOR FOR CHANGES** **Location**: Quarry Haul Road – From Pond 13 to Water Treatment System (WTS) **PCRA:** 5 and 6 **Observations:** Pipelines along Haul Road are affecting vegetated slope which may impact silt fences below. **Recommendations:** Monitor silt fences to confirm they are not affected by pipeline or large vegetation nearby.	

Signature:

MONTHLY INSPECTION REPORT

PROJECT: Lehigh Permanente Quarry: Inspection of Erosion and Sediment Control BMPs
Location: Cupertino, California **DATE:** **June 25, 2019**

0625_04	**Status:** **GOOD** **Location**: WMSA **PCRA:** 1 **Observations:** Silt fences along and below the access road remain in place. Slope below road is largely vegetated. **Recommendations:** Monitor sedimentation behind lower line of silt fences and the silt fence condition after storms.	
0625_05	**Status:GOOD** **Location**: WMSA **PCRA:** 1 **Observations:** Check dams remain functional and drainage ditches continue to convey stormwater. **Recommendations:** Check sedimentation behind check dams along the Quarry Haul Road towards WMSA.	
0625_06	**Status:** **MONITOR FOR CHANGES** **Location**: Yeager Yard **PCRA:** 2 and 3 **Observations:** Vegetation from hydroseeding is taking hold on the upper slopes. Lower slopes have lost some of the hydroseed vegetative cover. **Recommendations:** Repairs on the lower slope of Yeager Yard may be unsafe.	

Signature:

MONTHLY INSPECTION REPORT

PROJECT: Lehigh Permanente Quarry: Inspection of Erosion and Sediment Control BMPs
Location: Cupertino, California **DATE:** **June 25, 2019**

0625_07	**Status:** **GOOD** **Location**: Pond 13B **PCRA:** N/A **Observations:** Pond vicinity has good vegetative cover. Straw wattles were replaced even though there is good vegetative cover on the slopes. **Recommendations:** None at this time.	
0625_08	**Status:** **MONITOR FOR CHANGES** **Location**: Below Yeager Yard **PCRA:** 2 and 3 **Observations:** Sediment originating at the existing seep is intercepted in sediment basin below Yeager Yard formed by a perimeter berm around the basin. **Recommendations:** Sediment basin is to be cleared of sediment and debris regularly.	
0625_09	**Status:** **MONITOR FOR CHANGES** **Location**: Rock Plant – Improved Existing Access Road **PCRA:** N/A **Observations:** Hydroseeded slope lost some vegetative cover resulting from recent storms. Plastic tarps were installed to minimize erosion. **Recommendations:** Monitor storm flow and erosion along the top of the slope beyond the plastic tarp.	

Signature:

MONTHLY INSPECTION REPORT

PROJECT: Lehigh Permanente Quarry: Inspection of Erosion and Sediment Control BMPs
Location: Cupertino, California **DATE:** **June 25, 2019**

0625_10	**Status:** **MONITOR FOR CHANGES** **Location**: Rock Plant – Improved Existing Access Road **PCRA:** N/A **Observations:** Rock-lined drainage ditch is present and intended to reduce flow velocity in the ditch as well as retain sediment. **Recommendations:** Clear sediment along the ditch following the rainy season.	
0625_11	**Status:** **MONITOR FOR CHANGES** **Location**: Rock Plant – Improved Existing Access Road **PCRA:** N/A **Observations:** Drop inlet riser intercepts sediment captured through the water bars and roadside drainage ditch. **Recommendations:** Regularly clear sediment from and re-establish rock apron.	
0625_12	**Status:** **REPAIRS COMPLETED** **Location**: Rock Plant – Improved Existing Access Road **PCRA:** N/A **Observations:** Sediment level inside the sediment basin was below the pipe invert as the basin had recently been cleared of sediment. **Recommendations:** None at this time.	

Signature:

MONTHLY INSPECTION REPORT

PROJECT: Lehigh Permanente Quarry: Inspection of Erosion and Sediment Control BMPs
Location: Cupertino, California **DATE:** **June 25, 2019**

0625_13	**Status:** **MONITOR FOR CHANGES** **Location**: EMSA – Upper Slope **PCRA:** N/A **Observations:** Topsoil placement and track compaction is taking place over the upper slope. **Recommendations:** Monitor sediment accumulation along the drainage ditch and silt fence below earth placement area.	
0625_14	**Status:** **GOOD** **Location**: Lower EMSA **PCRA:** N/A **Observations:** Silt fence, straw wattles, and jute matting near Pond 30 and French drain conveyance are in good condition. Lowest line of silt fences, below vegetated slope, remains in place. **Recommendations:** Monitor the condition of the silt fences around Pond 30 regularly.	
0625_15	**Status:** **GOOD** **Location**: Lower EMSA **PCRA:** N/A **Observations:** Straw wattles and jute matting near Pond 30 and French drain conveyance are in good condition. **Recommendations:** None at this time.	

Signature:

August 1, 2019

VIA EMAIL: Manjunath.Shivalingappa@LehighHanson.com

Mr. Manjunath Shivalingappa
Lehigh Southwest Cement Company–Permanente Plant
24001 Stevens Creek Boulevard
Cupertino, California 95014

Dear Mr. Shivalingappa:

Re: Erosion and Sediment Control Best Management Practices (BMPs) Inspections
July 2019 Monthly Report
Lehigh Southwest Cement Company–Permanente Plant
Cupertino, California

GEI Consultants is pleased to submit the July 2019 Erosion and Sediment Control Best Management Practices (BMPs) Inspection Report regarding the implementation of BMPs at the Lehigh Southwest Cement Company plant in support of condition No. 78 items j and l under the "Hydrology and Water Quality" section of the Final Conditions of Approval from June 7, 2012, which state that the Mine Operator shall:

> "…regularly inspect all storm water and erosion controls, especially before and following qualifying rain events. Inspections shall be documented and periodically reported. Any violations shall be corrected immediately." And,
>
> "Ensure that all storm water, erosion, and sediment control BMPs are installed, inspected, maintained, and repaired under the direction of either a California certified engineer, geologist, or landscape architect, a registered professional hydrologist, or a certified erosion control specialist."

GEI Consultants inspected the erosion and sediment control BMPs at the Lehigh Southwest Cement Company plant once since there were no qualifying rain events during July 2019. A qualifying rain event is defined as "any event that produces 0.5 inches of precipitation or more with a 48-hour or greater period between rain events" (Construction General Permit, 2009-0009-DWQ). Without any qualifying rain events during July 2019, GEI Consultants performed a single inspection *July 12, 2019* as the monthly inspection of BMPs.

As part of the inspection, the BMPs onsite were observed and evaluated for performance. A summary of the inspection findings, BMPs' deficiencies, and recommendations based on the observations from the inspection can be found in the attached Daily Field Report (DFR). A Site Map identifying the various locations where the BMPs were inspected on July 12th is included in this report.

BMPs Deficiencies and Recommendations

Based on the observations from the July 2019 inspection, BMPs at the Lehigh SW Co. Permanente Plant are generally functional and, collectively, in good condition. No deficiencies were encountered during the July 2019 inspection.

We recommend that Lehigh Southwest Cement Company re-establish and perform maintenance on all BMPs that are to remain functional ahead of the rainy season, which typically begins in November. We recommend that Lehigh staff continue to monitor the silt fences and other BMPs assigned a status of "MONITOR FOR CHANGES" year-round.

The recommendations included in the DFR are intended to be used by Lehigh staff to monitor the condition and performance of erosion and sediment control BMPs, and to address the recommended maintenance actions to minimize deficiencies in BMPs.

If you have any questions, please feel free to contact Hugo Velasquez at (510) 350-2905 or Chris Kissick at (916) 631-4527.

Sincerely,

Hugo Velasquez, P.E., QSP
Project Engineer

Chris Kissick, P.E., QSD/QSP
Quality Control Engineer

GEI CONSULTANTS, INC.

cc: Mrs. Cindy Davis, Mr. Chris Kissick.

Site Map

SITE MAP

July 2019 Inspection

Daily Inspection Reports

MONTHLY INSPECTION REPORT

PROJECT: Lehigh Permanente Quarry: Inspection of Erosion and Sediment Control BMPs
Location: Cupertino, California **DATE:** July 12, 2019

GEI PROJECT # 1804336
OWNER: Lehigh Southwest Cement Co.
CLIENT: Lehigh Southwest Cement Co.
OBSERVATIONS REPORTED TO: Manjunath Shivalingappa
DAILY FIELD REPORT NO.: 13
GEI PROJECT MANAGER: Cindy Davis
REVIEWED BY: Chris Kissick
DATE REVIEWED: 08/01/2019

ENGINEER/GEOLOGIST: Hugo Velasquez
DAY OF WEEK: Friday
TIME ARRVIED: 08:00
TIME DEPARTED: 10:30
TRAVEL TIME (hours): 2.0
TOTAL TIME (hours): 4.5
TEMPERATURE: - **AM** 60s-70s **PM**
WEATHER: ☒ Clear ☐ Rain ☐ Overcast ☐ Fog ☐ Wind ☐ Other:

ATTACHMENTS: ⊗ Site Map ☐ Field Sketches ☐ Other(s)

Staff on site:	Organization:
Manjunath Shivalingappa	Lehigh Southwest Cement
Hugo Velasquez	GEI Consultants

Task Overview:

GEI is on-site to conduct the inspection of storm water, erosion, and sediment control BMPs of active and inactive reclamation areas within the Reclamation Plan Amendment (RPA) boundary at the Lehigh Permanente Quarry. Within the RPA boundary, the Permanente Creek Reclamation Area (PCRA) is divided into 7 sub-areas identified as PCRA 1 through 7 on the site map. Erosion and sediment control BMPs are located throughout the quarry and cement plant site, and at each of the PCRAs.

Inspection Summary:

During the inspection on July 12, 2019, Hugo Velasquez (GEI) and Manjunath Shivalingappa (Lehigh) walked throughout the Lehigh quarry and cement plant site and inspected the condition of the BMPs at the following locations: Lower East Material Storage Area (EMSA), Upper EMSA, Quarry Haul Road, Yeager Yard, PCRA 1, West Material Storage Area (WMSA), sediment basin below Yeager Yard, Permanente Creek, Pond 13B, and Rock Plant – in that order. A selection of photos representative of the condition of BMPs throughout the site taken during the inspection on July 12th are included.

The main observations documented during the July 12, 2019, inspection of erosion and sediment control BMPs at the Lehigh Cement Plant are as follows:

- Topsoil placement and track-compaction are taking place over the upper slope at the EMSA. Vegetative cover is present on the slopes below the areas of topsoil placement.
- At EMSA, vegetative cover continues to develop and become established over steep hydroseeded slopes that had previously experienced vegetative cover loss and significant erosion. Once further established, this vegetative cover will reduce the erosion over these slopes. The drainage path on the upper slope of the EMSA has been maintained to conduct sediment to the roadside sediment traps.
- Vegetative cover is present over the upper slopes of the Yeager Yard. It is not necessary to maintain the silt fences at the Yeager Yard in areas where the vegetative cover is established.
- The drop inlet sediment basin and discharge pipe by the improved existing access road at the Rock Plant were clear of sediment after repairs were completed.
- Other BMPs are to be maintained following the rainy season: (1) check dams and rock-lined drainage ditches are to be cleared of sediment regularly; or replaced if necessary before the beginning of the next rainy season (2) accumulation of sediment behind silt fences is to be monitored and silt fences maintained for containment of sediment year-round. (3) water bars should be monitored and re–established when they wash away.

Signature:

GEI Consultants

MONTHLY INSPECTION REPORT

PROJECT: Lehigh Permanente Quarry: Inspection of Erosion and Sediment Control BMPs
Location: Cupertino, California **DATE:** **July 12, 2019**

PHOTO ID	DESCRIPTION	PHOTO
0712_01	**Status:** **GOOD** **Location**: Lower EMSA **PCRA:** N/A **Observations:** Silt fence, straw wattles, and jute matting near Pond 30 and French drain conveyance are in good condition. Lowest line of silt fences, below vegetated slope, remains in place. **Recommendations:** Monitor the condition of the silt fences around Pond 30 regularly.	
0712_02	**Status:** **GOOD** **Location**: Lower EMSA **PCRA:** N/A **Observations:** Water bars were re-established on the road below EMSA. **Recommendations:** Monitor the condition of the water bars on the access road to EMSA. Re-establish the water bars and drainage lines as necessary.	
0712_03	**Status:** **MONITOR FOR CHANGES** **Location**: EMSA – Upper Slope **PCRA:** N/A **Observations:** Topsoil placement and track compaction is taking place over the upper slope. **Recommendations:** Monitor sediment accumulation along the rock-lined drainage ditch and silt fence below topsoil placement area.	

Signature:

GEI Consultants

MONTHLY INSPECTION REPORT

PROJECT: Lehigh Permanente Quarry: Inspection of Erosion and Sediment Control BMPs
Location: Cupertino, California **DATE:** **July 12, 2019**

PHOTO ID	DESCRIPTION	PHOTO
0712_06	**Status:** **MONITOR FOR CHANGES** **Location**: Quarry Haul Road –From Pond 13 to Water Treatment System (WTS) **PCRA:** 5 and 6 **Observations:** Pipelines along Haul Road are affecting vegetated slope which may impact silt fences below. **Recommendations:** Monitor silt fences to confirm they are not affected by pipeline or large vegetation nearby.	
0712_04	**Status:** **GOOD** **Location**: Quarry Haul Road – From Pond 13B to UTS **PCRA:** 5 and 6 **Observations:** Silt fence line remains in place below previous upper silt fence for containment of the stockpile material on the creekside slope. **Recommendations:** Monitor sediment and debris accumulation behind silt fences.	
0712_05	**Status:** **GOOD** **Location**: Quarry Haul Road – From Pond 13B to UTS **PCRA:** 5 and 6 **Observations:** Roadside berm was remains in place. **Recommendations:** Keep stockpiles away from the berm. Monitor berm condition after rain events.	

Signature:

MONTHLY INSPECTION REPORT

PROJECT: Lehigh Permanente Quarry: Inspection of Erosion and Sediment Control BMPs
Location: Cupertino, California **DATE:** **July 12, 2019**

PHOTO ID	DESCRIPTION	PHOTO
0712_07	**Status:** **MONITOR FOR CHANGES** **Location**: Yeager Yard **PCRA:** 2 and 3 **Observations:** Vegetation from hydroseeding is taking hold on the upper slopes. Lower slopes have lost some of the hydroseed vegetative cover. **Recommendations:** Monitor the vegetative cover on the slopes. Repairs of BMPs on the lower slope of Yeager Yard may be unsafe.	
0712_08	**Status:** **GOOD** **Location**: WMSA **PCRA:** 1 **Observations:** Silt fences along and below the access road remain in place. Slope below road is largely vegetated. **Recommendations:** Monitor sedimentation behind lower line of silt fences and the silt fence condition after storms.	
0712_09	**Status:GOOD** **Location**: WMSA **PCRA:** 1 **Observations:** Check dams remain functional and drainage ditches continue to convey stormwater. **Recommendations:** Check sedimentation behind check dams along the Quarry Haul Road towards WMSA.	

Signature:

GEI Consultants

MONTHLY INSPECTION REPORT

PROJECT: Lehigh Permanente Quarry: Inspection of Erosion and Sediment Control BMPs
Location: Cupertino, California **DATE:** **July 12, 2019**

PHOTO ID	DESCRIPTION	PHOTO
0712_10	**Status:** **MONITOR FOR CHANGES** **Location**: Below Yeager Yard **PCRA:** 2 and 3 **Observations:** The sediment basin below Yeager Yard is formed by a perimeter berm and intended to capture sediment from slopes above. Silt fences were installed above the perimeter berm. **Recommendations:** Sediment basin is to be cleared of sediment and debris regularly.	
0712_11	**Status:** **MONITOR FOR CHANGES** **Location**: Slopes above Permanente Creek **PCRA:** 1, 2, and 3 **Observations:** Silt fences were installed on the vegetated slopes immediately above Permanente Creek to reduce the sediment and debris going to the creek. **Recommendations:** Monitor the vegetative cover and maintain silt fences as needed.	
0712_12	**Status:** **GOOD** **Location**: Pond 13B **PCRA:** N/A **Observations:** Pond vicinity has good vegetative cover. Straw wattles were replaced even though there is good vegetative cover on the slopes. **Recommendations:** None at this time.	

Signature:

GEI Consultants

MONTHLY INSPECTION REPORT

PROJECT: Lehigh Permanente Quarry: Inspection of Erosion and Sediment Control BMPs
Location: Cupertino, California **DATE:** **July 12, 2019**

PHOTO ID	DESCRIPTION	PHOTO
0712_13	**Status:** **MONITOR FOR CHANGES** **Location**: Rock Plant – Improved Existing Access Road **PCRA:** N/A **Observations:** Plastic tarps were pulled above the vegetated slope allowing the vegetative cover to become established. **Recommendations:** Monitor vegetative cover ahead of the rainy season. Plastic tarps are not necessary once the vegetative cover is established.	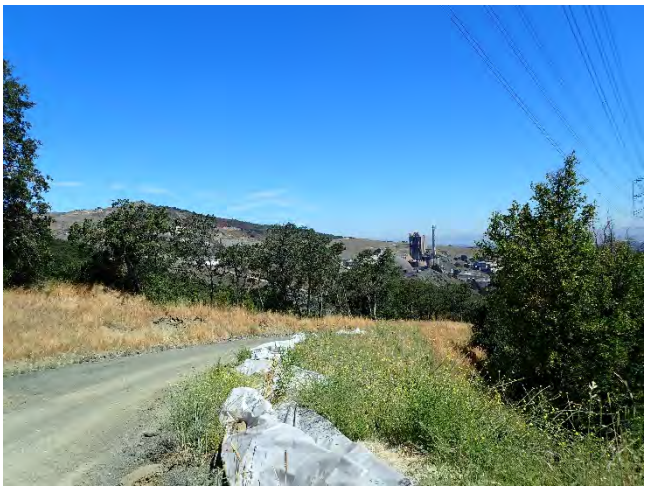
0712_14	**Status:** **MONITOR FOR CHANGES** **Location**: Rock Plant – Improved Existing Access Road **PCRA:** N/A **Observations:** Rock-lined drainage ditch is present and intended to reduce flow velocity in the ditch as well as retain sediment. **Recommendations:** Clear sediment along the ditch following the rainy season.	
0712_15	**Status:** **MONITOR FOR CHANGES** **Location**: Rock Plant – Improved Existing Access Road **PCRA:** N/A **Observations:** Drop inlet riser intercepts sediment captured through the water bars and roadside drainage ditch. **Recommendations:** Regularly clear sediment from and re-establish rock apron.	

Signature:

September 4, 2019

VIA EMAIL: Manjunath.Shivalingappa@LehighHanson.com

Mr. Manjunath Shivalingappa
Lehigh Southwest Cement Company–Permanente Plant
24001 Stevens Creek Boulevard
Cupertino, California 95014

Dear Mr. Shivalingappa:

Re: Erosion and Sediment Control Best Management Practices (BMPs) Inspections
August 2019 Monthly Report
Lehigh Southwest Cement Company–Permanente Plant
Cupertino, California

GEI Consultants is pleased to submit the August 2019 Erosion and Sediment Control Best Management Practices (BMPs) Inspection Report regarding the implementation of BMPs at the Lehigh Southwest Cement Company plant in support of condition No. 78 items j and l under the "Hydrology and Water Quality" section of the Final Conditions of Approval from June 7, 2012, which state that the Mine Operator shall:

> "…regularly inspect all storm water and erosion controls, especially before and following qualifying rain events. Inspections shall be documented and periodically reported. Any violations shall be corrected immediately." And,
>
> "Ensure that all storm water, erosion, and sediment control BMPs are installed, inspected, maintained, and repaired under the direction of either a California certified engineer, geologist, or landscape architect, a registered professional hydrologist, or a certified erosion control specialist."

GEI Consultants inspected the erosion and sediment control BMPs at the Lehigh Southwest Cement Company plant once since there were no qualifying rain events during August 2019. A qualifying rain event is defined as "any event that produces 0.5 inches of precipitation or more with a 48-hour or greater period between rain events" (Construction General Permit, 2009-0009-DWQ). Without any qualifying rain events during August 2019, GEI Consultants performed a single inspection on *August 13, 2019* as the monthly inspection of BMPs.

As part of the inspection, the BMPs onsite were observed and evaluated for performance. A summary of the inspection findings, BMPs deficiencies, and recommendations based on the observations from the inspection can be found in the attached Daily Field Report (DFR). A Site Map identifying the various locations where the BMPs were inspected on August 13th is included in this report.

BMPs Deficiencies and Recommendations

Based on the observations from the August 2019 inspection, BMPs at the Lehigh Southwest Cement Company – Permanente Plant are generally functional and, collectively, in good condition. No deficiencies were encountered during the August 2019 inspection.

We recommend that Lehigh Southwest Cement Company re-establish and perform maintenance on all BMPs that are to remain functional ahead of the rainy season, which typically begins in November. We recommend that Lehigh staff continue to monitor the silt fences and other BMPs assigned a status of "MONITOR FOR CHANGES" year-round.

The recommendations included in the DFR are intended to be used by Lehigh staff to monitor the condition and performance of erosion and sediment control BMPs, and to address the recommended maintenance actions to minimize deficiencies in BMPs.

If you have any questions, please feel free to contact Hugo Velasquez at (510) 350-2905 or Chris Kissick at (916) 631-4527.

Sincerely,

Hugo Velasquez, P.E., QSP
Project Engineer

Chris Kissick, P.E., QSD/QSP
Quality Control Engineer

GEI CONSULTANTS, INC.

cc: Mrs. Cindy Davis, Mr. Chris Kissick.

Site Map

SITE MAP

August 2019 Inspection

Daily Inspection Reports

GEI Consultants

MONTHLY INSPECTION REPORT

PROJECT: Lehigh Permanente Quarry: Inspection of Erosion and Sediment Control BMPs
Location: Cupertino, California **DATE:** **August 13, 2019**

GEI PROJECT # 1804336
OWNER: Lehigh Southwest Cement Co.
CLIENT: Lehigh Southwest Cement Co.
OBSERVATIONS REPORTED TO: Manjunath Shivalingappa
DAILY FIELD REPORT NO.: 14
GEI PROJECT MANAGER: Cindy Davis
REVIEWED BY: Chris Kissick
DATE REVIEWED: 09/01/2019

ENGINEER/GEOLOGIST: Hugo Velasquez
DAY OF WEEK: Tuesday
TIME ARRVIED: 09:00
TIME DEPARTED: 11:30
TRAVEL TIME (hours): 2.0
TOTAL TIME (hours): 4.5
TEMPERATURE: - **AM** 70s **PM**
WEATHER: ☒ Clear ☐ Rain ☐ Overcast ☐ Fog ☐ Wind ☐ Other:

ATTACHMENTS: ⊗ Site Map ☐ Field Sketches ☐ Other(s)

Staff on site:	Organization:
Manjunath Shivalingappa	Lehigh Southwest Cement
Hugo Velasquez	GEI Consultants

Task Overview:

GEI is on-site to conduct the inspection of storm water, erosion, and sediment control BMPs of active and inactive reclamation areas within the Reclamation Plan Amendment (RPA) boundary at the Lehigh Permanente Quarry. Within the RPA boundary, the Permanente Creek Reclamation Area (PCRA) is divided into 7 sub-areas identified as PCRA 1 through 7 on the site map. Erosion and sediment control BMPs are located throughout the quarry and cement plant site, and at each of the PCRAs.

Inspection Summary:

During the inspection on August 13, 2019, Hugo Velasquez (GEI) and Manjunath Shivalingappa (Lehigh) walked throughout the Lehigh quarry and cement plant site and inspected the condition of the BMPs at the following locations: Upper East Material Storage Area (EMSA), Quarry Haul Road, sediment basin below Yeager Yard, Yeager Yard, , West Material Storage Area (WMSA), Pond 13B, Rock Plant, and Lower EMSA – in that order. A selection of photos representative of the condition of BMPs throughout the site taken during the inspection on August 13th are included.

The main observations documented during the August 13, 2019, inspection of erosion and sediment control BMPs at the Lehigh Cement Plant are as follows:

- Topsoil placement and track-compaction are taking place over the upper slope at the EMSA. Vegetative cover is present on the slopes below the areas of topsoil placement.
- At EMSA, vegetative cover continues to develop and become established over steep hydroseeded slopes that had previously experienced vegetative cover loss and significant erosion. Once further established, this vegetative cover will reduce the erosion over these slopes. The drainage path on the upper slope of the EMSA has been maintained to conduct sediment to the roadside sediment traps.
- Vegetative cover is present over the upper slopes of the Yeager Yard. It is not necessary to maintain the silt fences at the Yeager Yard in areas where the vegetative cover is established.
- The drop inlet sediment basin and discharge pipe by the improved existing access road at the Rock Plant were clear of sediment after repairs were completed.
- Other BMPs are to be maintained following the rainy season: (1) check dams and rock-lined drainage ditches are to be cleared of sediment regularly; or replaced if necessary before the beginning of the next rainy season (2) accumulation of sediment behind silt fences is to be monitored and silt fences maintained for containment of sediment year-round. (3) water bars should be monitored and re–established when they wash away.

Signature:

MONTHLY INSPECTION REPORT

PROJECT: Lehigh Permanente Quarry: Inspection of Erosion and Sediment Control BMPs
Location: Cupertino, California **DATE:** **August 13, 2019**

PHOTO ID	DESCRIPTION	PHOTO
0813_01	**Status:** **GOOD** **Location**: Lower EMSA **PCRA:** N/A **Observations:** Silt fence, straw wattles, and jute matting near Pond 30 and French drain conveyance are in good condition. Lowest line of silt fences, below vegetated slope, remains in place. **Recommendations:** Monitor the condition of the silt fences around Pond 30 regularly.	
0813_02	**Status:GOOD** **Location**: Water Treatment System (WTS) **PCRA:** 2 and 3 **Observations:** Vegetation is maintained below the silt fence. Silt fences remain in place. **Recommendations:** Check silt fences following rain events and confirm that vegetation remains in place to mitigate potential erosion.	
0813_03	**Status:** **MONITOR FOR CHANGES** **Location**: Quarry Haul Road –From Pond 13 to Water Treatment System (WTS) **PCRA:** 5 and 6 **Observations:** Pipelines along Haul Road are affecting vegetated slope which may impact silt fences below. **Recommendations:** Monitor silt fences to confirm they are not affected by pipeline or large vegetation nearby.	

Signature:

MONTHLY INSPECTION REPORT

PROJECT: Lehigh Permanente Quarry: Inspection of Erosion and Sediment Control BMPs
Location: Cupertino, California **DATE:** **August 13, 2019**

PHOTO ID	DESCRIPTION	PHOTO
0813_04	**Status:** **GOOD** **Location**: Quarry Haul Road – From Pond 13B to UTS **PCRA:** 5 and 6 **Observations:** Silt fence line remains in place below previous upper silt fence for containment of the stockpile material on the creekside slope. **Recommendations:** Monitor sediment and debris accumulation behind silt fences.	
0813_05	**Status:** **GOOD** **Location**: Quarry Haul Road – From Pond 13B to UTS **PCRA:** 5 and 6 **Observations:** Roadside berm was remains in place. **Recommendations:** Keep stockpiles away from the berm. Monitor berm condition after rain events.	
0813_06	**Status:** **MONITOR FOR CHANGES** **Location**: Yeager Yard **PCRA:** 2 and 3 **Observations:** Vegetation from hydroseeding is taking hold on the upper slopes. Lower slopes have lost some of the hydroseed vegetative cover. **Recommendations:** Monitor the vegetative cover on the slopes. Repairs of BMPs on the lower slope of Yeager Yard may be unsafe.	

Signature:

MONTHLY INSPECTION REPORT

PROJECT: Lehigh Permanente Quarry: Inspection of Erosion and Sediment Control BMPs
Location: Cupertino, California **DATE:** **August 13, 2019**

PHOTO ID	DESCRIPTION	PHOTO
0813_07	**Status:GOOD** **Location**: WMSA **PCRA:** 1 **Observations:** Check dams remain functional and drainage ditches continue to convey stormwater. **Recommendations:** Check sedimentation behind check dams along the Quarry Haul Road towards WMSA.	
0813_08	**Status:** **MONITOR FOR CHANGES** **Location**: Below Yeager Yard **PCRA:** 2 and 3 **Observations:** The sediment basin below Yeager Yard is formed by a perimeter berm and intended to capture sediment from slopes above. Silt fences were installed above the perimeter berm. **Recommendations:** Sediment basin is to be cleared of sediment and debris regularly.	
0813_09	**Status:** **GOOD** **Location**: Pond 13B **PCRA:** N/A **Observations:** Pond vicinity has good vegetative cover. Straw wattles were replaced even though there is good vegetative cover on the slopes. **Recommendations:** None at this time.	

Signature:

MONTHLY INSPECTION REPORT

PROJECT: Lehigh Permanente Quarry: Inspection of Erosion and Sediment Control BMPs
Location: Cupertino, California **DATE:** **August 13, 2019**

PHOTO ID	DESCRIPTION	PHOTO
0813_10	**Status:** **MONITOR FOR CHANGES** **Location**: Rock Plant – Improved Existing Access Road **PCRA:** N/A **Observations:** Plastic tarps were removed exposing the vegetative cover which is well established. **Recommendations:** Monitor vegetative cover ahead of the rainy season.	
0813_11	**Status:** **MONITOR FOR CHANGES** **Location**: Rock Plant – Improved Existing Access Road **PCRA:** N/A **Observations:** Rock-lined drainage ditch is present and intended to reduce flow velocity in the ditch as well as retain sediment. **Recommendations:** Clear sediment along the ditch following the rainy season.	
0813_12	**Status:** **MONITOR FOR CHANGES** **Location**: Rock Plant – Improved Existing Access Road **PCRA:** N/A **Observations:** Drop inlet riser intercepts sediment captured through the water bars and roadside drainage ditch. **Recommendations:** Regularly clear sediment from and re-establish rock apron.	

Signature:

APPENDIX C:

RECLAMATION PLAN AMMENDMENT AND FINAL CONDITIONS OF APPROVAL ANNUAL WORKER TRAINING

Lehigh Southwest Cement Company
24001 Stevens Creek Boulevard
Cupertino, California 95014
(408) 996-4000

Memo

To:	Ms. Tressa Jackson	**From:**	Manjunath Shivalingappa
Copy:	NA	**Date:**	09-23-2019
Subject:	RPA Training Topics		

RECLAMATION PLAN AMENDMENT AND FINAL CONDITIONS OF APPROVAL TRAINING TOPICS

Per the Final Conditions of Approval number 11 (COA 11), Lehigh shall annually train all mining staff, including outside vendors, contractors, or consultants who are responsible for implementation of any part of the mine operations or reclamation at Permanente Quarry, on the requirements and provisions of the RPA, the conditions of approval, and the MMRP.

Reclamation Plan Amendment (RPA) and Provisions

Approval of the project would amend the existing reclamation plan for the Quarry and would result in the reclamation of an approximately 1,238-acre project area within the Applicant's overall 3,510-acre ownership. The Project is designed to make the reclaimed lands suitable for future open space uses. It includes site-specific activities to satisfy the reclamation requirements of the Surface Mining and Reclamation Act of 1975 and the County's surface mining ordinance and surface mining and land reclamation standards. The Project would be implemented in three phases over an approximately 20-year period, expected to begin in 2012 and conclude with final reclamation by approximately 2030.

As part of the RPA approval process, mitigation measures and provisions were agreed upon for the project. The Project Draft Environmental Impact Report (EIR) and Final EIR describe the various conditions and activities that the quarry must adhere to through the project. Quarry staff shall be aware of the conditions of approval that correspond to their job descriptions and responsibilities. These are listed and described throughout the Reclamation Plan Amendment, which is available for all quarry staff to view as needed.

Final Conditions of Approval

The County issued a Final Conditions of Approval which contains 89 different Conditions of Approval which shall be met by the Quarry. Quarry staff shall be aware of the COA's and be knowledgeable in those COA's which correspond to their job descriptions and responsibilities. A copy of the Final COAs is available for all quarry staff to view as needed.

PREVENTION OF TRIGGERING DEBRIS SLIDES

As a condition of approval for the Reclamation Plan Amendment, the County has mandated that mine operators shall be trained in the prevention of triggering debris slides. This is targeted at keeping sediment, especially limestone-based materials, from entering Permanente Creek and PCRA areas.

Please discuss the following topics with all employees:

1. General awareness of the causes and impacts of debris slides.

   Debris slides can occur on steep hillsides where consolidation of the substrate cannot support the loads above. Slides usually happen where fill slopes are steep and composed of loose materials. Any loosening or disturbance of supporting materials can cause a debris slide.

2. Maintaining thorough and adequate erosion control measures.

   Controls to prevent materials from sloughing off include debris/silt fencing placed on outer edge of grading and excavation operations, back-sloping excavations to prevent grade slope towards the creek, operations buffer areas, and berms along the outer extent of operations closest to the creek.

   At the Permanente Quarry, the main control is the haul road berms to prevent materials from entering the PCRA. Secondary controls are installed on the slopes below the haul road berm in various subareas on the creek slopes including erosion control matting, straw wattles, and wire-backed silt fencing.

3. Prevention of actions that may cause or exacerbate debris slide conditions

   Avoid unnecessarily removing vegetation, boulders and other substrates. Restrict vehicle operations to maintained roads. Stockpile fill and other debris in appropriate areas as designated with the haul road berms.

4. Regularly inspect areas with a high potential for slides and report any suspected conditions that might cause a debris slide into Permanente Creek and PCRA areas.

EROSION CONTROL TRAINING TOPICS

Erosion control is the practice of preventing or controlling wind or water erosion in agriculture, land development and construction. Effective erosion controls are important techniques in preventing water pollution and soil loss. Erosion controls are used in natural areas, agricultural settings or urban environments. Erosion controls often involve the creation of a physical barrier, such as vegetation or rock, to absorb some of the energy of the wind or water that is causing the erosion. On construction sites they are often implemented in conjunction with sediment controls such as sediment basins and silt fences.

On the Permanente Quarry Site, the main erosion controls include:

- Haul road berms to keep water out of the creek and directed toward siltation basins or ponds
- Siltation basins or ponds to settle out sediment and control waters leaving the site
- Silt fences, straw wattles, and erosion control blankets on the creek side of the haul road berms in select locations
- Silt fences, straw wattles, and erosion control blankets on the topsoil stockpiles

6 *Goals Of Erosion Control*

1. *No Sediment Leaves the Site*
2. *Lines of Defense Everywhere* & *Always*
3. *Cover Quickly*
4. *Protect the Swale, Ditch ,and Channel*
5. *Keep Clean Water Clean*
6. *Inspect, Clean* & *Fix*

Inlet Barriers (i.e.: sand bags, gutter buddies, straw wattles)

- Is the structure deteriorating
- Is sediment >1/2 the height of structure?
- Evidence of water/sediment getting around or under barrier?
- Are there other structures that require inlet barriers?

Sediment Barriers (i.e.: haul road check dams, ditch checks)

- Are they trenched in or falling down?
- Evidence of sediment/water getting around or under barrier?
- Is sediment more than 1/2 height of structure?
- Are there areas where more sediment barriers are required or need extended?

Perimeter Control (i.e.: Haul road berms, silt fence, straw wattles)

- Is all the off-site water being diverted where applicable?
- Evidence of water/sediment getting around or under barrier?
- Are there areas that need extended or additions to other locations?
- Are the barriers in good condition or in need of repair?
- Straw Blankets-are they deteriorating and need replaced?
- Are the haul road berms preventing water from entering the creek?

Stabilized Construction Entrance

- Evidence of sediment being tracked off site onto public streets?

Soil and Fines Stockpiles

- An earth berm must be constructed upstream around the area to prevent runoff from contacting stockpile and a downstream ditch to prevent waters from leaving the stockpile site

Sediment Basins

- Note the basin depth. Is the basin more than half full of sediment from original design?
- Condition of basin side slopes
- Evidence of water overtopping embankments
- Condition of outfall

General Site Conditions

- Trash barrels-any evidence of trash lying around site
- Location of portable restrooms
- Leaking vehicles
- Concrete Washouts Designated

STORM WATER POLLUTION PREVENTION PLAN: BMP'S

Best Management Practices (BMPs) are practices used to reduce the amount of pollution entering surface waters. Based on the potential pollutant areas identified at the facility, existing and recommended BMPs for the facility are discussed below.

Please discuss the following areas with all employees:

1) **Truck Loading Areas**
   a. Continue to immediately cleanup any spilled cement or aggregate.

2) **Raw Material Storage**
   a. Any total suspended solids (TSS) generated by stormwater contact with the aggregate storage areas is directed to detention ponds or basins which are designed to remove TSS prior to discharge. BMP in these areas would be to insure that stormwater runoff from aggregate storage or cement loading areas does not leave the property, but indeed goes to ponds or basins.
   b. Maintain bag houses to prevent dust from cement. Immediately cleanup any spill material to limit exposure to stormwater.

3) **Secondary Containment Storage**
   a. Secondary containment walls should be maintained, inspected and repaired when necessary to prevent leaks. Secondary containment is defined as spill containment for the contents of the single largest tank plus sufficient freeboard to allow for a 25 year, 24 hour storm event.
   b. Maintain the equipment and hoses within the containment area used to transfer the materials. Clean inside walls when necessary.

4) **Diesel Tanks**
   a. Fuel overflows during storage tank filling can be a major source of spills. Watch the transfer constantly to prevent overfilling and spilling.
   b. Clean up any spills or drips immediately.
   c. Verify that drain plug is installed.
   d. Discourage topping off of fuel tanks.
   e. Properly protect portable fuel tanks, pumps and hoses from contact with trucks and other mobile equipment.
   f. Install secondary containment around tank pump and piping if not already done, this would prevent a leak or spill from entering ponds, basins or from leaving the property.

5) **Oil Storage Areas**
   a. Place all drums and lubricants on drip containment pallets.
   b. Clean up any spills or drips with sorbent materials immediately.
   c. Maintain valves to prevent leaks.
   d. Clean out within containment when necessary. Inspect for residue prior to rainwater release. Remove old & unused barrels

6) **Ponds and Basins**
   a. Inspect basins regularly for damage, erosion, waste, and sediment buildup.
   b. Clean out basins when necessary to prevent a stormwater overflow.
   c. Reduce amount of sediment and processed water to keep basins level low.
   d. Inspect outfall regularly for dry weather discharge.

7) **Sediment Drying Areas**
   a. Inspect area regularly for damage, erosion, waste, and sediment buildup.
   b. Clean out area when necessary to prevent a stormwater overflow.
   c. Reduce amount of sediment to keep sediment levels low.

8) **Equipment Wash Areas**
   a. Continue to wash mobile equipment to the basins and direct all wash water to prevent it from leaving the containment area
   b. Keep area swept and free of aggregates, fines and trash that could enter the ponds, basins or leave property.
   c. Inspect area regularly for damage and erosion.

REMEMBER:
Keep tanks inside secondary containment.

- **Prevent a leak or spill from entering the ponds, basins or leaving the property.**

CULTURAL RESOURCES IDENTIFICATION AND PRESERVATION

Because cultural artifacts have been encountered on the Quarry site, mine operators shall be trained in the identification of archaeological artifacts and preservation of those resources. Please discuss the following topics with all employees:

1. General awareness of COA 65.
   If cultural resources are encountered the Mine Operator shall notify the Planning Manager and all activity within 100 feet of the find shall stop until the cultural resource is evaluated by a qualified archaeologist and a Native American representative. Ground disturbance shall not resume within 100 feet of the find until an agreement has been reached as to the appropriate treatment of the find

2. Identification of Cultural Resources:
   a. Prehistoric Archaeological Materials might include:
      i. Obsidian and chert flaked-stone tools (e.g., projectile points, knives, scrapers) or toolmaking debris;
      ii. Culturally darkened soil ("midden") containing heat-affected Rocks, artifacts, or shellfish remains;
      iii. Stone milling equipment (e.g., mortars, pestles, handstones, or milling slabs); and battered stone tools, such as hammerstones and pitted stones.
   b. Historic-period materials might include:
      i. stone, concrete, or adobe footings and walls;
      ii. filled wells or privies;
      iii. deposits of metal, glass, and/or ceramic refuse.

Figure 1. A grinding stone or 'metate' found on Permanente Quarry property.

Lehigh Hanson
HEIDELBERGCEMENT Group

Training Record Form

Date: 7-19-18

Topic: Reclamation Plan Ammendment and Final Conditions of Approval Annual Worker Training

Presenter: MANJU SHIV

Attendees

Name	Company	Telephone	Signature
Jose Solorio	Lehigh		
Fabior G Lopez			
Fidel A. CASTILLO			
RUBEN CORTES			Ruben Cortes
Humberto Del Bosque			
Eric Chavez			Eric Chavez
Jose Valdez			
Joey Gonzalez			

Lehigh Hanson
HEIDELBERGCEMENT Group

Training Record Form

Date: 7-19-18

Topic: Reclamation Plan Ammendment and Final Conditions of Approval Annual Worker Training

Presenter: MANJU SHIV

Attendees

Name	Company	Telephone	Signature
Tony Cabrera	LEHIGH	408 561 3270	
Adan Vega	"		
Mario Lutin	"		
Marcos Lutin	LEHIGH		
Jesse Vallejos	"		
Bradley Brockoff	Lehigh		
GEORGE TAYLOR	" "		

Lehigh Hanson
HEIDELBERGCEMENT Group

Training Record Form

Date: 7-19-18

Topic: Reclamation Plan Ammendment and Final Conditions of Approval Annual Worker Training

Presenter: MANJU SHIV

Attendees

Name	Company	Telephone	Signature
Raul Pena	Lehigh Hanson		[signature]
Vicente Cortes	" "		[signature]
Antonio Berrospe	" "		[signature]
Orlando S.I.J.R	" "		[signature]
Willy Topoff			[signature]
James Hurd	Lehigh H		[signature]
Esteban Navarro	Lehigh.		[signature]

TURNER

Lehigh Hanson
HEIDELBERGCEMENT Group

Training Record Form

Date: 7/26/18

Topic: Reclamation Plan Ammendment and Final Conditions of Approval Annual Worker Training

Presenter: MANJU SHIV

Attendees

Name	Company	Telephone	Signature
Tyler Frazier	Turner Mining Group	812-653-8758	
Austin Bernaiche	Turner Mining Group	860 6147486	
Joseph Lolla	Turner Mining Group	408-429-0044	
Garrett Hattaway	Turner mining Group	812-396-9349	
Patrick Perkins			
Zachary Ford			
Andy Burton	Turner Mining Group	612-296-1009	
David Thomson	Turner Mining Group	503-896-4196	
Levi Walk	Turner Mining Group	812-881-1624	
Ryan Carver	"	541-505-4869	
Lance Homola	TMG	360-869-9467	
Lucas Lallick	Turner Mining Group	715-205-5244	
Trey Reynolds	Turner Mining Group	941-809-1167	

TURNER

Lehigh Hanson
HEIDELBERGCEMENT Group

Training Record Form

Date: 7/26/18

Topic: Reclamation Plan Ammendment and Final Conditions of Approval Annual Worker Training

Presenter: MANJU SHIV

Attendees

Name	Company	Telephone	Signature
Mike Coyne	Turner Mining Group	530 921 1207	
Brittany Jones	Turner Mining Group	530 917-7192	
Travis Brown	Turner Mining	812-552-1774	

Lehigh Hanson
HEIDELBERGCEMENT Group

Training Record Form

Date: 07/25/19

Topic: Reclamation Plan Ammendment & Final Conditions of Approval Annual Worker Training

Presenter: Manjunath Shivalingappa

Attendees

Name	Company	Signature
Joey Gonzalez	Lehigh	
Adan Vega	Lehigh	
Esteban Navarro	Lehigh	
Antonio Benosse	Lehigh	
Marcos Lutin	Lehigh	
Jose Valdez	Lehigh	
Justin Ruffenio	TMG	
Genaro Chavez	Lehigh	
Angelo Salazar	Lehigh	
Bradley Brockoff	Lehigh	

Lehigh Hanson
HEIDELBERGCEMENT Group

Training Record Form

Date: 07/25/19

Topic: Reclamation Plan Ammendment & Final Conditions of Approval Annual Worker Training

Presenter: Manjunath Shivalingappa

Attendees

Name	Company	Signature
Einer Garcia	Lehigh	
Omar Saldaña	LEHigh	
FREDERICK M. RUBIO III	TMG	
Humberto Del Bosque	Lehigh	
Robert Javiegui	LIBERTY	
PASTOR G LOPEZ	Lehigh	
Rogelio Flores	Lehigh	
Courdell Daughrity	TMG	
STEPHANIE BAILEY	TMG	
Jesse Reynolds	TMG	

Lehigh Hanson
HEIDELBERGCEMENT Group

Training Record Form

Date: 07/25/19

Topic: Reclamation Plan Ammendment & Final Conditions of Approval Annual Worker Training

Presenter: Manjunath Shivalingappa

Attendees

Name	Company	Signature
Eric Turner	TMG	
Erin [illegible]	Lehigh	
Pedro Cabrera	Lehigh	
MARIO [illegible]	LEHIGH	
James Hurd #1	Lehigh	
Hector Martinez #2	lehigh	
Brian Waldeman	TMG	
Jason Sanford	Lehigh	
Chad Rye	TMG	
Tim Wiggins	TMG	

Lehigh Hanson
HEIDELBERGCEMENT Group

Training Record Form

Date: 07/25/19

Topic: Reclamation Plan Ammendment & Final Conditions of Approval Annual Worker Training

Presenter: Manjunath Shivalingappa

Attendees

Name	Company	Signature
Ghrey Bykin	Turner Mining	[signature]
Nicolas Hernandez	Le High	[signature]
Ben Urie	Turner Mining Group	[signature]
Matt Dailey	Turner Mining	[signature]
RICHARD BUSTILLOS	LEHIGH	[signature]
Tony Cabrera	LEHIGH	[signature]
Antonio Del Rio	Lehigh	[signature]
Rebecca Martarella	Lehigh	[signature]
Benjamin Chavez	Lehigh	[signature]
EDDIE SANCHEZ	LEHIGH	[signature]

Lehigh Hanson
HEIDELBERGCEMENT Group

Training Record Form

Date: 07/25/19

Topic: Reclamation Plan Ammendment & Final Conditions of Approval Annual Worker Training

Presenter: Manjunath Shivalingappa

Attendees

Name	Company	Signature
Jose A. Infante	Pro-Energy Comp.	J. Antonio
George Taylor	Lehigh	
Ruben Cortes	Lehigh	Ruben Cortes
Willy Tapp	Lehigh	
Jorge Moreno	Lehigh	Jorge Moreno
Zaryn Sullivan	Turner Mining Group	
Lucas Calvick	Turner Mining Group	
Corey Sampson	turner mining Group	
Austin LeVelle	turner mining group	
Jayce R Young	turner mining group	

Lehigh Hanson
HEIDELBERGCEMENT Group

Training Record Form

Date: 07/25/19

Topic: Reclamation Plan Ammendment & Final Conditions of Approval Annual Worker Training

Presenter: Manjunath Shivalingappa

Attendees

Name	Company	Signature
Joshua White	Turner Mining Group	
James Day	Turner Mining Group	
Matt McCullen	Turner Mining	
Aaron Ratterman	Turner Minning	
Robert Cera	Turner Mining Group	
Gabriel Vega	Turner Ming Group	
Jeff Smyth	Turner Mining	
James Joseph	Turner Mining Group	

APPENDIX D:

WATER QUALITY MONITORING MEMO

TECHNICAL MEMORANDUM

DATE 9/25/19

Project No. 1655230-03

TO Manjunath Shivalingappa
Lehigh Southwest Cement Company

CC

FROM George Wegmann, PG, CHG
Bill Fowler, PG, CEG

EMAIL: gwegmann@golder.com

COA 76 ANNUAL SUMMARY, LEHIGH PERMANENTE QUARRY

Golder Associates Inc. (Golder) has prepared this technical memorandum to document the activities completed at the Lehigh Permanente Quarry from July 1, 2018 through June 30, 2019 related to the Reclamation Plan Condition of Approval (COA) 76. COA 76 pertains to water quality monitoring and states the following:

> Within ninety (90) days of RPA approval, the Mine Operator shall begin and continue throughout the backfilling and reclamation phases and for 5 years following completion of reclamation and for 5 years following the start of groundwater discharge from the Quarry Pit into Permanente Creek as described on page 4.10-39 of the Final Environmental Impact Report, a Verification and Water Quality Monitoring Program. The Mine Operator shall implement the following:

a. Collect quarterly Quarry pit water samples and analyze for general water chemistry and dissolved and total metals, including selenium.

b. Perform quarterly electrical conductivity and pH measurements of the Quarry water.

c. Measure and record daily volume of any water that is pumped from the pit area.

d. Conduct annual seep surveys in March or April of each year within the Quarry pit. Any seeps shall be sampled for general water chemistry and minerals and dissolved metals, and the seep flow rate shall be estimated.

e. Perform routine testing of each of the various rock types that comprise the overburden to further characterize bulk and leachable concentrations of key metal constituents (selenium in particular). Such testing shall be performed until the average concentrations and the variability within a rock type is no longer changing significantly as new data are gathered.

f. Sample and test runoff from the EMSA and WMSA throughout and following reclamation to confirm the concepts and closure plans (i.e., that cover with non-limestone material and re-vegetation results in runoff water quality that meets Basin Plan Benchmarks and all other applicable water quality standards, including, but not limited to, a site specific NPDES permit for the Quarry and a TMDL for selenium in Permanente Creek). Stormwater runoff monitoring and sampling shall be conducted following the placement and final grading of the 1 foot run-of-mine non-limestone cover material to ensure that surface water discharging from this cover does not contain selenium at concentrations exceeding Basin Plan Benchmark values. Three rounds of representative surface water samples shall be collected and analyzed to verify rock cover performance prior to the placement of the vegetative growth layer.

Golder and the G logo are trademarks of Golder Associates Corporation

golder.com

g. Sample and test groundwater discharge from the Quarry Pit into Permanente Creek following reclamation as described on page 4.10-39 of the Final Environmental Impact Report to confirm that water quality in discharge meets Basin Plan Benchmarks and all other applicable water quality standards.

h. The data obtained through this mitigation measure shall be used to reevaluate the water balance components such as runoff and groundwater inflow and the water quality associated with these within the last five years of active mining. Based on the results of any refined water balance and water quality projections, the Mine Operator shall also review and refine the water management procedures. *(Implements Mitigation Measures 4.4-5 and 4.10-1b.).* All testing data shall be submitted to the Planning Office with the Annual Report by October 1 of each year.

The following provides a summary of tasks completed:

a. Collect quarterly Quarry pit water samples and analyze for general water chemistry and dissolved and total metals, including selenium.

From July 1, 2018 through June 30, 2019, samples were collected from the effluent of the EFF-001U and EFF-001L discharges from the final treatment systems (Table 1). The influent includes water from the Quarry, Cement Plant Reclaim Water, and the Pond 30 drainage. The samples were analyzed for total metals and/or general water chemistry parameters.

Table 1 also includes the discharge data from Ponds 9, 13b, 17, and 30 from July 1, 2018 through June 30, 2019. Ponds 13b and Pond 30 did not discharge during this time period.

b. Perform quarterly electrical conductivity and pH measurements of the Quarry water.

Electrical conductivity (EC) measurements were not taken as samples were analyzed for TDS directly (i.e., EC is a surrogate for TDS laboratory data). Total dissolved solids (TDS) and pH measurements are included on Table 1.

c. Measure and record daily volume of any water that is pumped from the pit area.

Daily records of volume of water, including water pumped from the pit, and treated and discharged through permitted discharge points EFF-001U (by Pond 4) and EFF-001L (by Pond 1) are included on Table 1 under EFF-001U and EFF-001L.

d. Conduct annual seep surveys in March or April of each year within the Quarry pit. Any seeps shall be sampled for general water chemistry and minerals and dissolved metals, and the seep flow rate shall be estimated.

On April 30, 2019, Golder performed a seep survey within the Quarry pit. Three seeps were identified during the survey similar to last year:

- Seep-750: this seep is located by the western/northwestern portion of the pit where it emerges from above the quarry floor along the northwestern wall.
- Seep-850: this seep is located in the southwest portion of the pit where it emerges from the 850 and 900 feet (ft) elevation benches.
- Seep-1200: this seep is located along the 1200 ft elevation bench at the southeast pit wall in an area of mining activity. This seep is within the same general area as sampled in 2018.

Golder did not identify any additional seeps within the Quarry pit. During the seep survey, the identified seeps were sampled and analyzed for general water chemistry and dissolved metals. The results of the sampling and the estimated flow rates are shown on Table 2. Selenium results from the three samples ranged from 2.6 micrograms per Liter (µg/L) from Seep-750 to 41 µg/L from Seep-1200. Nickel results ranged from 6.1 µg/L to 61 µg/L. The estimated flow rate of the seeps ranged from 3 gallons per minute (gpm) for Seep-750 to 200 gpm for Seep-850.

e. Perform routine testing of each of the various rock types that comprise the overburden to further characterize bulk and leachable concentrations of key metal constituents (selenium in particular). Such testing shall be performed until the average concentrations and the variability within a rock type is no longer changing significantly as new data are gathered.

Samples of the primary overburden materials located within the quarry were collected and analyzed in 2014. The samples were collected of the Santa Clara Formation, greenstone, and graywacke and were submitted for laboratory analysis for total selenium and for leaching potential via the waste extraction test (WET). Total selenium was not detected above the laboratory method detection limit of 0.022 milligrams per kilogram (mg/kg). WET results ranged from non-detect to 1.5 µg/L.

Lehigh completed additional characterization work in 2018.[1] Included with this characterization work were the collection and analysis of samples of the overburden material consisting of greenstone and graywacke. The work was completed in part to provide information on acid rock drainage (ARD) potential, chemical and mineralogical composition, and leaching potential via the California modified WET analysis with DI water. The rock samples were collected from drill core and surface locations and included the following:

- Greenstone (6 samples): Three drill core samples and one grab sample from each of the following locations: North Quarry, EMSA, and WMSA. The samples were collected from varying depths and degrees of weathering.
- Graywacke (1 sample): One drill core sample

The results were consistent with previous work and are included as Tables 3 and 4. Total selenium was not detected above the laboratory method detection limit of 0.022 milligrams per kilogram (mg/kg); WET results ranged from non-detect to 1.8 µg/L.

f. Sample and test runoff from the EMSA and WMSA throughout and following reclamation to confirm the concepts and closure plans (i.e., that cover with non-limestone material and re-vegetation results in runoff water quality that meets Basin Plan Benchmarks and all other applicable water quality standards, including, but not limited to, a site specific NPDES permit for the Quarry and a TMDL for selenium in Permanente Creek). Stormwater runoff monitoring and sampling shall be conducted following the placement and final grading of the 1 foot run-of-mine non-limestone cover material to ensure that surface water discharging from this cover does not contain selenium at concentrations exceeding Basin Plan Benchmark values. Three rounds of representative surface water samples shall be collected and analyzed to verify rock cover performance prior to the placement of the vegetative growth layer.

During the 2018/2019 wet season, Lehigh managed stormwater runoff in the EMSA by pumping accumulated water in the collection vault to Pond 11 and the Cement Plant reclaim water system for treatment by the final treatment system prior to discharging to Permanente Creek under Lehigh's NPDES permit.[2] A total of 6,543,261 gallons, of which 3,116,100 gallons originated from the French drain, was pumped to Pond 11 from

[1] Golder Associates, Preliminary Closure Plan, Lehigh Southwest Cement Company Permanente, June 2019
[2] Golder Associates, Memorandum, EMSA Stormwater Management Update, Lehigh Permanente Facility, Santa Clara County, CA, February 1, 2019

the collection vault. Lehigh collected samples for selenium analysis from the vault and the French drain throughout the wet season prior to transferring the water to Pond 11 for treatment prior to being discharged. The results are summarized below:

Table 5: Operations Summary Table

Selenium	French Drain (µg/L)		Vault (µg/L)
Type	Dissolved	Total	Total
1/9/2019	71	74	
1/15/2019	90	87	
2/5/2019		77	49
2/15/2019		71	
2/22/2019		66	64
2/28/2019		49	
3/7/2019		53	50
3/28/2019			45
5/16/19	44		27
5/23/19	40		

Golder completed the wet season monitoring program, which included the collection of water samples from similar locations as previous years (Figure 1). Under the direction of a California Professional Geologist, Golder personnel collected samples from 14 locations in January and February 2019 during three rain events. Golder attempted to collect samples during a late season rain event in April 2019; however, the sample locations were dry. Additionally, several of the previous locations were dry during all or some of the sampling events.

Golder inspected the EMSA for runoff and/or sheet flow to target these areas for sampling. Similar to previous years, rainfall appeared to readily infiltrate the EMSA material in locations where no significant runoff or sheet flow was observed by field staff during the storm events. Most of the samples were collected of water that accumulated on the non-limestone interim cover material cover material, where water appeared to be emanating as seeps from the toe of the EMSA slopes, and from the drainage conveyance system. The type of sample and results are noted on Table 2. Selenium detected in samples of water that accumulated on the non-limestone interim cover material ranged from non-detect to 2.8 µg/L. Results from samples collected along the toe of the EMSA slopes (e.g., EC-16) ranged from 18 µg/L to 75 µg/L. These samples are considered more representative of seeps emanating from the toe of the slopes than direct runoff of the cover material. Samples were collected from the drainage swale and the upstream conveyance system, including Ponds 31A and 31B. Results ranged from 8.1 µg/L to 56 µg/L. The higher results were noted from sample locations along the drainage swale just west of Pond 30.

As part of the wet season monitoring program, sediment samples were collected from three of the locations that were sampled previously: eastern edge of Pond 30 (PD30-SD3), along the eastern portion of the drainage swale (Swale-SD1) and form the western portion of the drainage swale (Swale-SD2). Sample locations are

shown on Figure 1. Samples were not collected from all of the previous Pond 30 locations because of safety concerns accessing the pond. At each location, Golder collected a surficial sample and then a deeper sample from one foot below ground surface (bgs). The deeper sample was collected to evaluate potential differences with depth. The samples were collected with a hand auger or shovel and plastic scoops and placed in laboratory provided glass jars. Samples were transported to a certified analytical laboratory where the laboratory analyzed the samples for total selenium. Based on the total results, two samples were analyzed for leaching potential via the California modified WET analysis with DI water

The total selenium concentrations were non-detect for all samples except from the shallow sample collected at from Pond 30 where selenium was detected at an estimated value of 1.4 milligram per kilogram (mg/kg) (Table 5). Both samples from PD30-SD3 were selected for WET analysis. WET selenium results were 0.0074 mg/L (7.4 µg/L) from the shallow interval and non-detect from the deeper interval. The WET data along with the total results suggest that the sediment is not a primary source of selenium in water, consistent with previous years.

g. Sample and test groundwater discharge from the Quarry Pit into Permanente Creek following reclamation as described on page 4.10-39 of the Final Environmental Impact Report to confirm that water quality in discharge meets Basin Plan Benchmarks and all other applicable water quality standards.

This task is to be completed after reclamation activities are complete.

h. The data obtained through this mitigation measure shall be used to reevaluate the water balance components such as runoff and groundwater inflow and the water quality associated with these within the last five years of active mining. Based on the results of any refined water balance and water quality projections, the Mine Operator shall also review and refine the water management procedures. *(Implements Mitigation Measures 4.4-5 and 4.10-1b.).* All testing data shall be submitted to the Planning Office with the Annual Report by October 1 of each year.

This task is ongoing.

Attachments

Table 1: Monitoring Data Summary
Table 2: Quarry Seep Data
Table 3: TTLC, STLC, and ABA Results
Table 4: Mineralogical Composition
Table 5: Operations Summary Table (in text)
Table 6: Sediment Results

Figure 1: Sampling Results

Table 1: Monitoring Data Summary
Lehigh Permanente Facility
September 2019

Discharge 001 Upper (EFF-001U)						Total Res	Settleable	Chromium								Chronic Toxicity	
Date	Flow Rate	TSS	O&G	Temp	pH	Chlorine	Matter	(VI)	Mercury	Nickel	Selenium	Thallium	TDS	Turbidity	Acute Tox	Survival	Rep.
Units	gpd	mg/L	mg/L	degree C	s.u.	mg/L	mL/L/hr	ug/L	ug/L	ug/L	ug/L	ug/L	mg/L	NTU	% survival	TUc	TUc
Sample Type		Grab	Grab		Grab	Grab	Grab	Grab	Grab	Grab	Grab	Grab	Grab	Grab	C-24	C-24	
7/1/2018	1,574,387																
7/2/2018	1,593,850				8.1	0.0								4.97			
7/3/2018	1,001,940				8.1	0.0								2.83			
7/4/2018	1,264,766				8.1	0.0								3.85			
7/5/2018	1,205,841	<0.56			7.9	0.0							810	2.72			
7/6/2018	1,578,302				8.0	0								3.96			
7/7/2018	1,233,210																
7/8/2018	935,206																
7/9/2018	1,130,034				8.1	0								2.43			
7/10/2018	1,233,879				8.0	0								2.13			
7/11/2018	1,130,340				8.0	0								3.96			
7/12/2018	1,459,657	2.6	<0.86	22.73	8.0	0	<0.10	0.20	<0.00050	9.3	0.45 J	<0.10	730	2.70			
7/13/2018	1,594,123				8.1	0								1.25			
7/14/2018	533,952																
7/15/2018	857,857																
7/16/2018	865,258				8.1	0								1.12			
7/17/2018	1,140,923				8.0	0								1.58			
7/18/2018	1,595,372	1.9			8.2	0							800	0.85			
7/19/2018	1,467,975				7.8	0								0.92			
7/20/2018	1,128,943				8.0	0								1.08			
7/21/2018	1,570,571																
7/22/2018	1,545,308																
7/23/2018	1,573,259	1.9			7.9	0		0.64		12		<0.10	810	1.21	100		
7/24/2018	0																
7/25/2018	0																
7/26/2018	0																
7/27/2018	0																
7/28/2018	0																
7/29/2018	0																
7/30/2018	0																
7/31/2018	0																
8/1/2018	0	***No discharge for the month***															
9/1/2018	0	***No discharge for the month***															
10/1/2018	0	***No discharge for the month***															
11/1/2018	0	***No discharge for the month***															
12/1/2018	0	***No discharge for the month***															
1/1/2019	0																
1/2/2019	0																
1/3/2019	0																
1/4/2019	0																
1/5/2019	0																
1/6/2019	0																
1/7/2019	0																
1/8/2019	0																
1/9/2019	0																
1/10/2019	0																
1/11/2019	0																
1/12/2019	0																
1/13/2019	0																
1/14/2019	957,379				7.12	0.0								0.89			
1/15/2019	1,471,234				7.93	0.0			0.00226					0.93			
1/16/2019	1,387,475				7.32	0.0								0.94			
1/17/2019	1,412,496	<0.56	<0.82		7.36	0.0	<0.10	2.7		14	3.0	<0.10	460	1.23			
1/18/2019	576,666				8.2	0.0								1.01			
1/19/2019	0																

Table 1: Monitoring Data Summary
Lehigh Permanente Facility
September 2019

Discharge 001 Upper (EFF-001U)						Total Res	Settleable	Chromium								Chronic Toxicity	
Date	Flow Rate	TSS	O&G	Temp	pH	Chlorine	Matter	(VI)	Mercury	Nickel	Selenium	Thallium	TDS	Turbidity	Acute Tox	Survival	Rep.
Units	gpd	mg/L	mg/L	degree C	s.u.	mg/L	mL/L/hr	ug/L	ug/L	ug/L	ug/L	ug/L	mg/L	NTU	% survival	TUc	TUc
Sample Type		Grab	Grab		Grab	Grab	Grab	Grab	Grab	Grab	Grab	Grab	Grab	Grab	C-24	C-24	
1/20/2019	0																
1/21/2019	1,501,096				7.36	0.0								1.92			
1/22/2019	1,497,653				7.4	0								2.0			
1/23/2019	1,323,000				6.99	0								0.99			
1/24/2019	1,471,064				7.1	0								1.18			
1/25/2019	1,501,801	0.67			7.45	0							410	0.64			
1/26/2019	1,479,036																
1/27/2019	1,476,889																
1/28/2019	819,000				7.44	0								0.87			
1/29/2019	838,409				7.96	0								0.94			
1/30/2019	1,029,261				7.47	0								1.39			
1/31/2019	1,029,261	0.59		16.34	7.20	0		0.89		10	0.97 J	<0.10	470	0.66			
2/1/2019	1,418,235				7.27	0								0.66			
2/2/2019	1,463,191																
2/3/2019	1,205,298																
2/4/2019	1,278,705				7.6	0								0.74			
2/5/2019	1,350,647	0.62			7.8	0							280	1.46			
2/6/2019	1,203,265				7.2	0								0.88			
2/7/2019	1,390,404				8.5	0								1.89			
2/8/2019	1,289,708				8.3	0								0.83			
2/9/2019	1,295,012																
2/10/2019	1,301,409																
2/11/2019	1,280,795	<0.56	<0.82		8.3	0	<0.10	1.1	0.00031 J	6.7	0.50 J	<0.10	350	0.75			
2/12/2019	1,357,741				7.5	0								0.89			
2/13/2019	1,277,248				7.8	0								0.61			
2/14/2019	1,365,068				8.1	0								0.65			
2/15/2019	1,397,764				7.9	0								1.03			
2/16/2019	1,471,531																
2/17/2019	1,408,704																
2/18/2019	1,352,368				7.7	0								2.14			
2/19/2019	1,199,817				7.8	0								2.07			
2/20/2019	1,321,434				7.9	0								0.94			
2/21/2019	1,336,110				7.4	0								2.64			
2/22/2019	1,358,459	<0.62		12.48	8.3	0		2.3		16	0.92 J	<0.10	420	0.83			
2/23/2019	1,241,331																
2/24/2019	1,146,479																
2/25/2019	1,414,187				8.3	0								0.79			
2/26/2019	1,392,465				7.6	0								1.77			
2/27/2019	1,207,093				7.4	0								0.94			
2/28/2019	1,251,560	<0.56			7.46	0							450	1.52			
3/1/2019	1,205,367				7.4	0								1.86		<1.0^	<1.0^
3/2/2019	1,247,862																
3/3/2019	1,356,277																
3/4/2019	1,421,968				7.4	0								1.89			
3/5/2019	1,474,261				7.8	0								1.67			
3/6/2019	1,232,588				7.9	0								3.46			
3/7/2019	1,418,422	0.67	<0.82	14.78	7.9	0	<0.10 H	0.51	<0.000500	9.5 J	1.5 J	<0.50	480	1.72			
3/8/2019	1,375,960				7.9	0								1.88			
3/9/2019	1,172,804																
3/10/2019	1,304,667																
3/11/2019	1,282,191				8.1	0								3.33			
3/12/2019	1,270,627				7.9	0								1.45			
3/13/2019	1,412,558	<0.56			7.2	0							540	1.68			
3/14/2019	1,391,524				7.9	0								2.71			
3/15/2019	1,344,251				7.8	0								1.87			

Table 1: Monitoring Data Summary
Lehigh Permanente Facility
September 2019

Discharge 001 Upper (EFF-001U)						Total Res	Settleable	Chromium								Chronic Toxicity	
Date	Flow Rate	TSS	O&G	Temp	pH	Chlorine	Matter	(VI)	Mercury	Nickel	Selenium	Thallium	TDS	Turbidity	Acute Tox	Survival	Rep.
Units	gpd	mg/L	mg/L	degree C	s.u.	mg/L	mL/L/hr	ug/L	ug/L	ug/L	ug/L	ug/L	mg/L	NTU	% survival	TUc	TUc
Sample Type		Grab	Grab		Grab	Grab	Grab	Grab	Grab	Grab	Grab	Grab	Grab	Grab	C-24	C-24	
3/16/2019	1,269,588																
3/17/2019	1,357,954																
3/18/2019	1,335,984				8.2	0								0.83			
3/19/2019	1,259,631				7.6	0								1.21			
3/20/2019	1,261,858	0.78			7.6	0		1.2		26	6.8	<0.10	490	1.63	100		
3/21/2019	1,161,268				7.3	0								1.74			
3/22/2019	499,777				7.5	0								1.94			
3/23/2019	0																
3/24/2019	402,106																
3/25/2019	1,320,156	<0.56			8.3	0							380	2.7			
3/26/2019	1,343,489				7.9	0								1.65			
3/27/2019	1,332,608				7.8	0								2.17			
3/28/2019	1,314,797				7.9	0								1.57			
3/29/2019	1,344,194				7.9	0								3.63			
3/30/2019	1,475,035																
3/31/2019	1,474,591																
4/1/2019	1,647,221				8.0	0								1.97		<1.0	<1.0
4/2/2019	1,318,005	1.2	<0.82	16.44	7.9	0	<0.10	1.4	0.00054	16	5.4	<0.10	330	2.05			
4/3/2019	499,356				7.9	0								1.27			
4/4/2019	1,183,482				8.1	0								2.95			
4/5/2019	1,707,044				8.1	0								2.87			
4/6/2019	1,722,482																
4/7/2019	1,650,624																
4/8/2019	1,650,459				8.1	0								2.62			
4/9/2019	1,531,058				7.7	0.0								1.46			
4/10/2019	870,400				8.2	0.0								4.27			
4/11/2019	1,586,988	1.6			7.0	0.0							600	4.9			
4/12/2019	1,530,789				6.9	0.0								2.25			
4/13/2019	1,432,274																
4/14/2019	1,373,246																
4/15/2019	1,462,250				7.4	0.0								3.17			
4/16/2019	1,687,275				7.7	0.0								4.5			
4/17/2019	1,706,195				7.8	0.0								2.08			
4/18/2019	1,571,126	<0.59			8.1	0.0							460	4.6			
4/19/2019	476,381				8.1	0.0								4.3			
4/20/2019	1,431,490																
4/21/2019	1,323,828																
4/22/2019	1,656,742				8.0	0								3.1			
4/23/2019	1,611,953				7.6	0								4.0			
4/24/2019	1,639,229	<0.56			7.4	0.0		0.10 J		7.6	0.23 J	<0.10	330	1.98			
4/25/2019	1,736,570				7.1	0								3.34			
4/26/2019	1,642,217				7.5	0								1.30		<1.0	<1.0
4/27/2019	1,736,895																
4/28/2019	1,736,614																
4/29/2019	1,699,362				8.2	0								2.47			
4/30/2019	1,111,515				8.1	0.0								2.9			
5/1/2019	1,233,937				7.5	0.0								2.40			
5/2/2019	1,244,044	2.1			7.5	0.0							670	2.13			
5/3/2019	995,143				7.5	0.0								2.17			
5/4/2019	1,289,217																
5/5/2019	1,203,154																
5/6/2019	1,346,343				7.4	0.0								2.68			
5/7/2019	1,442,788				8.1	0.0								1.74			
5/8/2019	1,234,373				7.8	0.0								1.93			
5/9/2019	1,272,274	0.78			8.1	0.0							570	1.69			

Table 1: Monitoring Data Summary
Lehigh Permanente Facility
September 2019

Discharge 001 Upper (EFF-001U)						Total Res	Settleable	Chromium								Chronic Toxicity	
Date	Flow Rate	TSS	O&G	Temp	pH	Chlorine	Matter	(VI)	Mercury	Nickel	Selenium	Thallium	TDS	Turbidity	Acute Tox	Survival	Rep.
Units	gpd	mg/L	mg/L	degree C	s.u.	mg/L	mL/L/hr	ug/L	ug/L	ug/L	ug/L	ug/L	mg/L	NTU	% survival	TUc	TUc
Sample Type		Grab	Grab		Grab	Grab	Grab	Grab	Grab	Grab	Grab	Grab	Grab	Grab	C-24	C-24	
5/10/2019	1,340,288				8.1	0.0								4.48			
5/11/2019	1,378,281																
5/12/2019	1,380,871																
5/13/2019	1,319,088	0.89	<0.82	21.77	8.1	0.0	<0.10	0.45	0.00021 J	14	2.6	<0.10	750	2.78			
5/14/2019	1,363,079				8.1	0.0								3.14			
5/15/2019	1,329,688				7.8	0.0								3.97			
5/16/2019	1,225,053				8.1	0.0								2.63			
5/17/2019	1,176,294				8.1	0.0								3.23			
5/18/2019	1,343,162																
5/19/2019	1,347,313																
5/20/2019	1,311,881				8.1	0.0								1.87			
5/21/2019	1,311,152				8.1	0.0								1.99			
5/22/2019	1,369,542				8.1	0.0								2.11			
5/23/2019	1,352,721	<0.56			8.0	0.0		0.39		13	2.5	<0.10	770	2.10			
5/24/2019	1,381,789				8.0	0.0								4.41			
5/25/2019	1,381,936																
5/26/2019	1,404,420																
5/27/2019	1,405,721				8.1	0.0								3.67			
5/28/2019	1,367,571				8.2	0.0								4.23			
5/29/2019	1,153,873	2.6			7.9	0.0							780	4.81			
5/30/2019	1,369,627				8.1	0.0								2.48			
5/31/2019	1,075,046				7.8	0.0								3.12			
6/1/2019	1,094,426																
6/2/2019	1,287,385																
6/3/2019	1,270,599	0.89	<0.82		7.9	0.0	<0.10	0.47	0.00035 J	10	2.3	<0.10	540	3.48			
6/4/2019	1,382,132				8.2	0.0								4.38			
6/5/2019	1,108,197				8.1	0.0								3.77			
6/6/2019	1,166,038				8.0	0.0								3.25			
6/7/2019	1,222,222				8.1	0.0								2.78			
6/8/2019	1,118,479																
6/9/2019	1,240,416																
6/10/2019	1,170,475				8.1	0.0								2.36			
6/11/2019	1,169,404	0.78			8.1	0.0		0.34		4.5	0.77 J	<0.10	460	1.47	100		
6/12/2019	1,217,320			24.17	8.0	0.0								1.88			
6/13/2019	1,122,094				7.9	0.0								2.59			
6/14/2019	1,122,246				8.1	0.0								4.13			
6/15/2019	1,188,764																
6/16/2019	1,152,643																
6/17/2019	1,238,904				7.9	0.0								2.32			
6/18/2019	1,226,718				8.1	0.0								1.86			
6/19/2019	1,230,330				7.8	0.0								4.1			
6/20/2019	1,242,865	0.78			8.1	0.0							450	2.18			
6/21/2019	1,233,448				8.0	0.0								2.62			
6/22/2019	1,239,299																
6/23/2019	1,244,213																
6/24/2019	1,179,366				8.1	0.0								2.17			
6/25/2019	1,186,198				8.1	0.0								3.48			
6/26/2019	1,251,973				7.8	0.0								3.26			
6/27/2019	1,232,981				7.9	0.0								1.98			
6/28/2019	1,251,779	1.0			8.1	0.0							340	2.76			
6/29/2019	1,255,428																
6/30/2019	1,237,391																

Notes:
J = estimated value below reporting limit (DNQ)

Monitoring Data Summary
Lehigh Permanente Facility
September 2019

Discharge 001 Lower (EFF-001L)						Total Res	Settleable	Chromium								Chronic Toxicity	
Date	Flow Rate	TSS	O&G	Temp	pH	Chlorine	Matter	(VI)	Mercury	Nickel	Selenium	Thallium	TDS	Turbidity	Acute Tox	Survival	Rep.
Units	gpd	mg/L	mg/L	degree C	s.u.	mg/L	mL/L/hr	ug/L	ug/L	ug/L	ug/L	ug/L	mg/L	NTU	% survival	TUc	TUc
Sample Type		Grab	Grab		Grab	Grab	Grab	Grab	Grab	Grab	Grab	Grab	Grab	Grab	C-24	C-24	
3/12/2019	1,238,400				7.5	0								0.25			
3/13/2019	1,274,400	<0.56			7.3	0							470	0.51			
3/14/2019	949,320				7.5	0								0.53			
3/15/2019	1,262,880				7.7	0								0.52			
3/16/2019	901,680																
3/17/2019	995,220																
3/18/2019	1,248,480				7.2	0								0.51			
3/19/2019	1,632,540				7.3	0								0.49			
3/20/2019	1,486,320	<0.56			6.9	0		0.047 J		16	6.5	<0.10	490	0.61			
3/21/2019	1,296,000				7.3	0								0.50			
3/22/2019	1,509,120				7.3	0								0.49			
3/23/2019	1,683,360																
3/24/2019	1,008,000																
3/25/2019	1,728,000	<0.56	<0.82		7.1	0	<0.10	0.082 J	0.00028 J	98		<0.10	510	0.321			
3/26/2019	1,149,120				7.3	0								0.402			
3/27/2019	1,255,680				7.1	0								0.391			
3/28/2019	1,000,920			12.54	7.4	0					<0.19			0.376	100		
3/29/2019	1,094,280				7.5	0								0.421			
3/30/2019	1,281,600																
3/31/2019	1,267,200																
4/1/2019	0															<1.0	6.2
4/2/2019	0																
4/3/2019	0																
4/4/2019	0																
4/5/2019	0																
4/6/2019	0																
4/7/2019	0																
4/8/2019	0																
4/9/2019	0																
4/10/2019	1,725,837				7.7	0.0								0.41			
4/11/2019	1,743,840	0.78			7.6	0.0		4.0		14		<0.10	560	0.32			
4/12/2019	1,509,480				8.0	0.0								0.46			
4/13/2019	1,644,960																
4/14/2019	1,733,022																
4/15/2019	1,581,360				7.5	0.0								1.05			
4/16/2019	1,107,630				8.0	0.0								2.36			
4/17/2019	1,327,560				7.9	0.0								1.87			
4/18/2019	1,720,800	<0.59			7.5	0.0							790	2.41			
4/19/2019	1,357,740				7.8	0.0								0.27			
4/20/2019	1,739,250																
4/21/2019	1,594,560																
4/22/2019	1,508,220				8.1	0.0								3.2			
4/23/2019	1,258,950				7.5	0.0								0.26			
4/24/2019	1,673,640	0.67	<0.82	14.7	7.9	0.0	<0.10	0.85	0.00096	21	9.3	<0.10	700	1.74			
4/25/2019	1,420,815				7.5	0.0								1.44			
4/26/2019	1,679,460				7.6	0.0								1.13		<1.0	<1.0
4/27/2019	1,673,940																
4/28/2019	1,642,950																
4/29/2019	1,300,000				7.3	0.0								2.22			
4/30/2019	1,200,000				7.2	0.0								2.31			
5/1/2019	1,156,020				7.7	0.0								0.72			
5/2/2019	1,312,000	<0.56			7.8	0.0							770	0.47			
5/3/2019	400,560				7.8	0.0								0.4			
5/4/2019	1,756,200																
5/5/2019	1,600,550																
5/6/2019	493,800				7.7	0.0								0.47			

Monitoring Data Summary
Lehigh Permanente Facility
September 2019

Discharge 001 Lower (EFF-001L)						Total Res	Settleable	Chromium								Chronic Toxicity	
Date	Flow Rate	TSS	O&G	Temp	pH	Chlorine	Matter	(VI)	Mercury	Nickel	Selenium	Thallium	TDS	Turbidity	Acute Tox	Survival	Rep.
Units	gpd	mg/L	mg/L	degree C	s.u.	mg/L	mL/L/hr	ug/L	ug/L	ug/L	ug/L	ug/L	mg/L	NTU	% survival	TUc	TUc
Sample Type		Grab	Grab		Grab	Grab	Grab	Grab	Grab	Grab	Grab	Grab	Grab	Grab	C-24	C-24	
5/7/2019	1,753,045				7.8	0.0								1.23			
5/8/2019	1,230,200				7.1	0.0								1.65			
5/9/2019	1,613,550	0.89			7.1	0.0							840	1.43			
5/10/2019	1,066,500				7.2	0.0								0.84			
5/11/2019	0																
5/12/2019	0																
5/13/2019	0																
5/14/2019	0																
5/15/2019	0																
5/16/2019	0																
5/17/2019	0																
5/18/2019	0																
5/19/2019	0																
5/20/2019	0																
5/21/2019	0																
5/22/2019	0																
5/23/2019	0																
5/24/2019	0																
5/25/2019	0																
5/26/2019	0																
5/27/2019	0																
5/28/2019	0																
5/29/2019	0																
5/30/2019	0																
5/31/2019	0																
6/1/2019	0																
6/2/2019	0																
6/3/2019	0																
6/4/2019	0																
6/5/2019	0																
6/6/2019	0																
6/7/2019	0																
6/8/2019	0																
6/9/2019	0																
6/10/2019	0																
6/11/2019	0																
6/12/2019	0																
6/13/2019	0																
6/14/2019	1,583,243	0.89			7.8	0.0							850	0.81			
6/15/2019	1,736,208																
6/16/2019	1,523,340																
6/17/2019	1,720,032				7.8	0.0								1.17			
6/18/2019	1,621,215				7.9	0.0								1.46			
6/19/2019	1,746,048				8.1	0.0								1.35			
6/20/2019	1,738,032	<0.56	<0.82		7.8	0.0	<0.10	2.0	0.00044 J	10	2.9	<0.10	450	1.80			
6/21/2019	1,727,856				7.9	0.0								1.17			
6/22/2019	1,743,600																
6/23/2019	1,586,244																
6/24/2019	1,131,097				8.0	0.0								0.87			
6/25/2019	1,607,540				7.9	0.0								1.16			
6/26/2019	1,762,016				8.1	0.0								0.92			
6/27/2019	1,036,170				8.1	0.0								2.78			
6/28/2019	1,177,289	0.56		22.23	7.8	0.0		1.3		10		<0.10	420	0.92	100		
6/29/2019	1,737,264																
6/30/2019	1,049,133																

Notes:
J = estimated value below reporting limit (DNQ)

Monitoring Data Summary
Lehigh Permanente Facility
September 2019

Pond 13b: Discharge 002					Settleable			Chromium				
	Flow Rate	TSS	O&G	pH	Matter	Turbidity	Conductivity	(VI)	Mercury	Nickel	Selenium	Thallium
Units	gpd	mg/L	mg/L	s.u.	mL/L/hr	NTU	umhos/cm	ug/L	ug/L	ug/L	ug/L	ug/L
Sample Type		Grab	Grab	Grab	Grab	Grab	Grab	Grab	Grab	Grab	Grab	Grab
July 2018	***No discharge for the month***											
August 2018	***No discharge for the month***											
September 2018	***No discharge for the month***											
October 2018	***No discharge for the month***											
November 2018	***No discharge for the month***											
December 2018	***No discharge for the month***											
January 2019	***No discharge for the month***											
February 2019	***No discharge for the month***											
March 2019	***No discharge for the month***											
April 2019	***No discharge for the month***											
May 2019	***No discharge for the month***											
June 2019	***No discharge for the month***											

Monitoring Data Summary
Lehigh Permanente Facility
September 2019

Pond 9: Discharge 003					Chromium				
Date		Flow Rate	pH	Conductivity	(VI)	Mercury	Nickel	Selenium	Thallium
Units		gpd	s.u.	umhos/cm	ug/L	ug/L	ug/L	ug/L	ug/L
Sample Type			Grab	Grab	Grab	Grab	Grab	Grab	Grab
7/1/2018		55,900							
7/2/2018		57,700							
7/3/2018		57,600							
7/4/2018		57,600							
7/5/2018		57,100							
7/6/2018		56,600							
7/7/2018		57,900							
7/8/2018		59,200							
7/9/2018		57,600							
7/10/2018		58,500							
7/11/2018		58,700							
7/12/2018		56,500							
7/13/2018		58,200							
7/14/2018		56,600							
7/15/2018		57,300							
7/16/2018		56,000							
7/17/2018		56,200							
7/18/2018		52,800							
7/19/2018		54,100							
7/20/2018		54,400							
7/21/2018		53,300							
7/22/2018		52,500							
7/23/2018		53,400	7.42	1037	0.17 J	0.00095	4.7	2.3	<0.10
7/24/2018		51,900							
7/25/2018		51,700							
7/26/2018		52,200							
7/27/2018		54,400							
7/28/2018		54,200							
7/29/2018		54,600							
7/30/2018		54,200							
7/31/2018		53,100							
8/1/2018		52,200							
8/2/2018		50,300							
8/3/2018		49,400							
8/4/2018		51,000							
8/5/2018		50,700							
8/6/2018		49,300							
8/7/2018		50,100							
8/8/2018		49,500							
8/9/2018		48,700							

Monitoring Data Summary
Lehigh Permanente Facility
September 2019

Pond 9: Discharge 003					Chromium				
Date		Flow Rate	pH	Conductivity	(VI)	Mercury	Nickel	Selenium	Thallium
Units		gpd	s.u.	umhos/cm	ug/L	ug/L	ug/L	ug/L	ug/L
Sample Type			Grab	Grab	Grab	Grab	Grab	Grab	Grab
8/10/2018		48,500							
8/11/2018		48,900							
8/12/2018		48,800							
8/13/2018		48,900							
8/14/2018		49,300							
8/15/2018		49,400							
8/16/2018		49,200							
8/17/2018		48,300							
8/18/2018		46,800							
8/19/2018		46,200							
8/20/2018		46,000							
8/21/2018		48,200							
8/22/2018		47,100							
8/23/2018		45,900							
8/24/2018		44,600							
8/25/2018		42,900							
8/26/2018		40,300							
8/27/2018		39,300							
8/28/2018		39,400							
8/29/2018		36,600							
8/30/2018		37,300							
8/31/2018		37,200							
9/1/2018		37,300							
9/2/2018		37,400							
9/3/2018		38,200							
9/4/2018		39,900							
9/5/2018		40,700							
9/6/2018		40,800							
9/7/2018		38,000							
9/8/2018		37,100							
9/9/2018		36,400							
9/10/2018		35,500							
9/11/2018		35,500							
9/12/2018		34,600							
9/13/2018		32,400							
9/14/2018		31,800							
9/15/2018		31,300							
9/16/2018		30,800							
9/17/2018		31,800							

Monitoring Data Summary
Lehigh Permanente Facility
September 2019

Pond 9: Discharge 003					Chromium				
Date		Flow Rate	pH	Conductivity	(VI)	Mercury	Nickel	Selenium	Thallium
Units		gpd	s.u.	umhos/cm	ug/L	ug/L	ug/L	ug/L	ug/L
Sample Type			Grab	Grab	Grab	Grab	Grab	Grab	Grab
9/18/2018		31,300							
9/19/2018		19,500							
9/20/2018		18,700							
9/21/2018		19,100							
9/22/2018		18,100							
9/23/2018		16,600							
9/24/2018		15,400							
9/25/2018		15,600							
9/26/2018		15,500							
9/27/2018		23,300							
9/28/2018		25,700							
9/29/2018		26,500							
9/30/2018		23,100							
10/1/2018		24,200							
10/2/2018		26,200							
10/3/2018		28,400							
10/4/2018		31,000							
10/5/2018		30,700							
10/6/2018		31,200							
10/7/2018		31,700							
10/8/2018		31,800							
10/9/2018		32,500							
10/10/2018		32,500							
10/11/2018		33,200							
10/12/2018		34,700							
10/13/2018		34,700							
10/14/2018		35,600							
10/15/2018		34,200							
10/16/2018		33,100							
10/17/2018		32,900							
10/18/2018		27,400							
10/19/2018		20,400							
10/20/2018		12,000							
10/21/2018		10,600							
10/22/2018		13,300							
10/23/2018		7,700							
10/24/2018		11,600							
10/25/2018		8,600							
10/26/2018		10,300							

Monitoring Data Summary
Lehigh Permanente Facility
September 2019

Pond 9: Discharge 003					Chromium				
Date		Flow Rate	pH	Conductivity	(VI)	Mercury	Nickel	Selenium	Thallium
Units		gpd	s.u.	umhos/cm	ug/L	ug/L	ug/L	ug/L	ug/L
Sample Type			Grab	Grab	Grab	Grab	Grab	Grab	Grab
10/27/2018		8,600							
10/28/2018		12,600							
10/29/2018		6,500							
10/30/2018		5,300							
10/31/2018		4,200							
11/1/2018		8,700							
11/2/2018		26,500							
11/3/2018		20,800							
11/4/2018		13,800							
11/5/2018		26,900							
11/6/2018		9,000							
11/7/2018		1,100							
11/8/2018		2,300							
11/9/2018		700							
11/10/2018		800							
11/11/2018		500							
11/12/2018		300							
11/13/2018		600							
11/14/2018		500							
11/15/2018		1,300							
11/16/2018		1,300							
11/17/2018		11,600							
11/18/2018		12,000							
11/19/2018		4,300							
11/20/2018		1,800							
11/21/2018		12,800							
11/22/2018		22,700							
11/23/2018		34,900							
11/24/2018		23,000							
11/25/2018		11,300							
11/26/2018		10,700							
11/27/2018		12,500							
11/28/2018		23,300							
11/29/2018		51,400							
11/30/2018		23,000							
12/1/2018		25,700							
12/2/2018		18,200							
12/3/2018		20,400							
12/4/2018		17,700							

Monitoring Data Summary
Lehigh Permanente Facility
September 2019

Pond 9: Discharge 003					Chromium				
Date		Flow Rate	pH	Conductivity	(VI)	Mercury	Nickel	Selenium	Thallium
Units		gpd	s.u.	umhos/cm	ug/L	ug/L	ug/L	ug/L	ug/L
Sample Type			Grab	Grab	Grab	Grab	Grab	Grab	Grab
12/5/2018		24,400							
12/6/2018		19,700							
12/7/2018		19,400							
12/8/2018		20,000							
12/9/2018		22,800							
12/10/2018		37,100							
12/11/2018		41,100							
12/12/2018		39,000							
12/13/2018		39,900							
12/14/2018		24,600							
12/15/2018		33,500							
12/16/2018		36,400							
12/17/2018		62,200	7.54	1238	0.48	0.0039	5.6	14	ND<0.10
12/18/2018		40,800							
12/19/2018		36,800							
12/20/2018		30,900							
12/21/2018		37,900							
12/22/2018		45,600							
12/23/2018		38,000							
12/24/2018		39,200							
12/25/2018		49,100							
12/26/2018		50,000							
12/27/2018		41,900							
12/28/2018		51,900							
12/29/2018		43,900							
12/30/2018		42,600							
12/31/2018		44,600							
1/1/2019		44,800							
1/2/2019		43,900							
1/3/2019		43,500							
1/4/2019		43,400							
1/5/2019		50,700							
1/6/2019		73,000							
1/7/2019		66,400							
1/8/2019		59,100							
1/9/2019		66,700							
1/10/2019		65,100							
1/11/2019		54,500							
1/12/2019		46,900							

Monitoring Data Summary
Lehigh Permanente Facility
September 2019

Pond 9: Discharge 003					Chromium				
Date		Flow Rate	pH	Conductivity	(VI)	Mercury	Nickel	Selenium	Thallium
Units		gpd	s.u.	umhos/cm	ug/L	ug/L	ug/L	ug/L	ug/L
Sample Type			Grab	Grab	Grab	Grab	Grab	Grab	Grab
1/13/2019		52,600							
1/14/2019		47,200							
1/15/2019		52,400							
1/16/2019		95,100							
1/17/2019		97,200							
1/18/2019		81,600							
1/19/2019		80,300							
1/20/2019		78,700							
1/21/2019		83,300							
1/22/2019		81,400							
1/23/2019		82,500							
1/24/2019		80,600							
1/25/2019		88,900							
1/26/2019		83,700							
1/27/2019		86,700							
1/28/2019		87,000							
1/29/2019		80,700							
1/30/2019		85,700							
1/31/2019		101,200							
2/1/2019		100,000							
2/2/2019		110,900							
2/3/2019		110,200							
2/4/2019		104,500							
2/5/2019		71,300							
2/6/2019		66,600							
2/7/2019		64,600							
2/8/2019		64,900							
2/9/2019		63,200							
2/10/2019		63,500							
2/11/2019		60,300							
2/12/2019		61,500							
2/13/2019		69,000							
2/14/2019		88,300							
2/15/2019		73,900							
2/16/2019		71,100							
2/17/2019		68,300							
2/18/2019		65,100							
2/19/2019		63,600							
2/20/2019		64,900							

Monitoring Data Summary
Lehigh Permanente Facility
September 2019

Pond 9: Discharge 003					Chromium				
Date		Flow Rate	pH	Conductivity	(VI)	Mercury	Nickel	Selenium	Thallium
Units		gpd	s.u.	umhos/cm	ug/L	ug/L	ug/L	ug/L	ug/L
Sample Type			Grab	Grab	Grab	Grab	Grab	Grab	Grab
2/21/2019		63,700							
2/22/2019		62,200							
2/23/2019		63,800							
2/24/2019		65,400							
2/25/2019		66,700							
2/26/2019		66,300							
2/27/2019		69,900							
2/28/2019		65,600							
3/1/2019		61,800							
3/2/2019		64,500							
3/3/2019		63,300							
3/4/2019		61,900							
3/5/2019		61,000							
3/6/2019		64,700							
3/7/2019		70,200							
3/8/2019		67,900							
3/9/2019		66,700							
3/10/2019		68,000							
3/11/2019		67,500							
3/12/2019		66,700	7.75	971	0.53	0.00170	5.0	9.6	ND<0.10
3/13/2019		65,500							
3/14/2019		63,900							
3/15/2019		64,300							
3/16/2019		65,600							
3/17/2019		67,300							
3/18/2019		66,600							
3/19/2019		66,700							
3/20/2019		67,800							
3/21/2019		66,500							
3/22/2019		66,500							
3/23/2019		67,100							
3/24/2019		65,800							
3/25/2019		67,700							
3/26/2019		67,600							
3/27/2019		68,400							
3/28/2019		66,400							
3/29/2019		66,400							
3/30/2019		66,100							
3/31/2019		66,800							
4/1/2019		67,700							

Monitoring Data Summary
Lehigh Permanente Facility
September 2019

Pond 9: Discharge 003					Chromium				
Date		Flow Rate	pH	Conductivity	(VI)	Mercury	Nickel	Selenium	Thallium
Units		gpd	s.u.	umhos/cm	ug/L	ug/L	ug/L	ug/L	ug/L
Sample Type			Grab	Grab	Grab	Grab	Grab	Grab	Grab
4/2/2019		67,000	7.14	1032	0.46	0.00150	3.2	7.3	ND<0.10
4/3/2019		69,700							
4/4/2019		70,300							
4/5/2019		72,700							
4/6/2019		73,100							
4/7/2019		73,400							
4/8/2019		76,100							
4/9/2019		81,300							
4/10/2019		83,500							
4/11/2019		84,500							
4/12/2019		84,800							
4/13/2019		85,300							
4/14/2019		85,700							
4/15/2019		86,600							
4/16/2019		88,500							
4/17/2019		87,800							
4/18/2019		92,200							
4/19/2019		88,800							
4/20/2019		79,200							
4/21/2019		78,800							
4/22/2019		80,400							
4/23/2019		81,500							
4/24/2019		82,100							
4/25/2019		81,600							
4/26/2019		82,000							
4/27/2019		82,100							
4/28/2019		82,000							
4/29/2019		80,400							
4/30/2019		81,100							
5/1/2019		84,200							
5/2/2019		84,300							
5/3/2019		84,400							
5/4/2019		86,900							
5/5/2019		89,400							
5/6/2019		91,400							
5/7/2019		91,700							
5/8/2019		90,400							
5/9/2019		88,400							
5/10/2019		88,200							
5/11/2019		90,800							

Monitoring Data Summary
Lehigh Permanente Facility
September 2019

Pond 9: Discharge 003					Chromium				
Date		Flow Rate	pH	Conductivity	(VI)	Mercury	Nickel	Selenium	Thallium
Units		gpd	s.u.	umhos/cm	ug/L	ug/L	ug/L	ug/L	ug/L
Sample Type			Grab	Grab	Grab	Grab	Grab	Grab	Grab
5/12/2019		91,600							
5/13/2019		97,300							
5/14/2019		99,600							
5/15/2019		104,400							
5/16/2019		101,500							
5/17/2019		93,900							
5/18/2019		94,400							
5/19/2019		97,900							
5/20/2019		96,500							
5/21/2019		98,600							
5/22/2019		99,300							
5/23/2019		99,400							
5/24/2019		100,400							
5/25/2019		101,600							
5/26/2019		100,300							
5/27/2019		99,400							
5/28/2019		103,500							
5/29/2019		103,400							
5/30/2019		101,700							
5/31/2019		103,900							
6/1/2019		105,200							
6/2/2019		105,900							
6/3/2019		105,300							
6/4/2019		105,900							
6/5/2019		104,500							
6/6/2019		103,700							
6/7/2019		104,300							
6/8/2019		103,300							
6/9/2019		102,800							
6/10/2019		103,800							
6/11/2019		103,900							
6/12/2019		104,000							
6/13/2019		103,400							
6/14/2019		77,900							
6/15/2019		60,500							
6/16/2019		62,400							
6/17/2019		63,400							
6/18/2019		64,300							
6/19/2019		64,100							
6/20/2019		63,500							

Monitoring Data Summary
Lehigh Permanente Facility
September 2019

Pond 9: Discharge 003									
Date		Flow Rate	pH	Conductivity	Chromium (VI)	Mercury	Nickel	Selenium	Thallium
Units		gpd	s.u.	umhos/cm	ug/L	ug/L	ug/L	ug/L	ug/L
Sample Type			Grab	Grab	Grab	Grab	Grab	Grab	Grab
6/21/2019		62,700							
6/22/2019		61,200							
6/23/2019		62,100							
6/24/2019		66,500							
6/25/2019		77,800							
6/26/2019		78,500							
6/27/2019		76,900							
6/28/2019		88,100							
6/29/2019		87,200							
6/30/2019		83,200							

Notes:
J = estimated value below reporting limit (DNQ)

Monitoring Data Summary
Lehigh Permanente Facility
September 2019

Pond 17:					Settleable			Chromium				
Date	Flow Rate	TSS	O&G	pH	Matter	Turbidity	Conductivity	(VI)	Mercury	Nickel	Selenium	Thallium
Units	gpd	mg/L	mg/L	s.u.	mL/L/hr	NTU	umhos/cm	ug/L	ug/L	ug/L	ug/L	ug/L
Sample Type		Grab	Grab	Grab	Grab	Grab	Grab	Grab	Grab	Grab	Grab	Grab
July 2018	***No discharge for the month***											
August 2018	***No discharge for the month***											
September 2018	***No discharge for the month***											
October 2018	***No discharge for the month***											
November 2018	***No discharge for the month***											
December 2018	***No discharge for the month***											
1/1/2019	0											
1/2/2019	0											
1/3/2019	0											
1/4/2019	0											
1/5/2019	0											
1/6/2019	0											
1/7/2019	0											
1/8/2019	0											
1/9/2019	0											
1/10/2019	0											
1/11/2019	0											
1/12/2019	0											
1/13/2019	0											
1/14/2019	0											
1/15/2019	110,592											
1/16/2019	118,406											
1/17/2019	0											
1/18/2019	0											
1/19/2019	0											
1/20/2019	0											
1/21/2019	0											
1/22/2019	0											
1/23/2019	0											
1/24/2019	0											
1/25/2019	0											
1/26/2019	0											
1/27/2019	0											
1/28/2019	0											
1/29/2019	0											
1/30/2019	0											
1/31/2019	0											
February 2019	No discharge for month except from Diversion Pipeline B (run-on from non-industrial, upper Rock Plant area)											
March 2019	No discharge except limited flow from Pipeline B											
April 2019	No discharge for the month											
May 2019	No discharge for the month											

Monitoring Data Summary
Lehigh Permanente Facility
September 2019

Pond 30: Discharge 006					Settleable			Chromium				
	Flow Rate	TSS	O&G	pH	Matter	Turbidity	Conductivity	(VI)	Mercury	Nickel	Selenium	Thallium
Units	gpd	mg/L	mg/L	s.u.	mL/L/hr	NTU	umhos/cm	ug/L	ug/L	ug/L	ug/L	ug/L
Sample Type		Grab	Grab	Grab	Grab	Grab	Grab	Grab	Grab	Grab	Grab	Grab
July 2018	***No discharge for the month***											
August 2018	***No discharge for the month***											
September 2018	***No discharge for the month***											
October 2018	***No discharge for the month***											
November 2018	***No discharge for the month***											
December 2018	***No discharge for the month***											
January 2019	***No discharge for the month***											
February 2019	***No discharge for the month***											
March 2019	***No discharge for the month***											
April 2019	***No discharge for the month***											
May 2019	***No discharge for the month***											
June 2019	***No discharge for the month***											

Table 2: Quarry Pit Seep Data

Lehigh Permanente Facility

September 2019

Quarry Pit Seeps	**Seep-750**	**Seep-850**	**Seep-1200**
Metals (dissolved, 200 series)	**4/30/2019**	**4/30/2019**	**4/30/2019**
Antimony (ug/L)	0.70 J	2.6	1.6 J
Arsenic (ug/L)	6.4	1.7 J	1.5 J
Beryllium (ug/L)	<0.050	<0.050	<0.050
Cadmium (ug/L)	0.059 J	1.1	0.040 J
Chromium (ug/L)	<0.15	<0.15	<0.15
Copper (ug/L)	2.3	2.6	4.6
Lead (ug/L)	<0.021	<0.021	<0.021
Mercury (ug/L)	<0.029	<0.029	<0.029
Nickel (ug/L)	6.1	61	9.6
Selenium (ug/L)	2.6	33	41
Silver (ug/L)	<0.015	<0.015	<0.015
Thallium (ug/L)	<0.025	0.18 J	0.026 J
Zinc (ug/L)	<2.2	180	4.9 J
Additional Parameters			
Dissolved Calcium (mg/L)	30	180	280
Dissolved Magnesium (mg/L)	9.4	61	130
Dissolved Sodium (mg/L)	190	18	52
Dissolved Potassium (mg/L)	1.5	1.6	2.8
Bicarbonate (mg/L)	190	270	140
Chloride (mg/L)	6.6	13	54
Fluoride (mg/L)	0.064 J	0.083	0.34
Nitrate as NO3	0.27	11	14
Sulfate (mg/L)	340	450	1100
Dissolved Hardness	110	700	1200
Total Dissolved Solids (mg/L)	770	960	2000
Total Suspended Solids (mg/L)	22	14	42
Turbidity - Field (NTU)	13.7	1.83	1.50
pH - Field (s.u.)	8.45	7.29	8.14
Temperature - Field (°C)	21.11	14.54	19.26
DO - Field (mg/L)	6.74	8.90	7.75
Electrical Conductivity - Field (µS/cm)	1078	1196	2047
Estimated Flow Rate (GPM)	3	200	4

Notes:

Samples for dissolved metals analysis were field filtered; J= Estimated Value

Table 3
TTLC, STLC, and ABA Results

	Sample ID	GEO 2-12 40-50'	GEO 2-12 240-250'	GEO 2-13 30-40'	GREEN-1-QUARRY	GREEN-2-WMSA	GREEN-3-EMSA	GR-1-1025 PIT			
	Rock Type	Greenstone	Greenstone	Greenstone	Greenstone	Greenstone	Greenstone	Graywacke	ESLs		
TTLC Metals	units								Com/Ind Dir Shallow	Construction Worker	Background
Antimony	mg/kg	<0.8	<0.8	1.2 J	3.5	2.7	1.8	1.6 J	467	142	
Arsenic	mg/kg	18.8	9.9	4.2	3.4	3.5	5.2	9	0.31	1	11, 24
Barium	mg/kg	151	163	41.4	233	311	157	218	216,611	3,019	
Beryllium	mg/kg	0.35	0.42	0.45	0.53	0.35	0.26	0.47	2,212	42	
Cadmium	mg/kg	1.9	0.57	<0.06	<0.06	0.11 J	0.10 J	0.12 J	578	43	
Chromium	mg/kg	9.23	84.1	39.8	214	304	126	95	6/1752000	3/530909	
Cobalt	mg/kg	5.77	18	38.2	47.2	39.3	44.9	18	347	28	
Copper	mg/kg	16.6	39.5	109	70.2	104	117	32.9	46,720	14,158	
Lead	mg/kg	2.5	8.3	2.6	2.4	2.9	2.5	10	320	160	
Mercury	mg/kg	0.045	0.057	0.052	0.064	0.042	0.056	0.093	187	44	
Molybdenum	mg/kg	2.42	1.01	0.46 J	0.18 J	0.37 J	0.70 J	0.76 J	5,840	1,770	
Nickel	mg/kg	24.8	131	40.4	280	198	147	107	11,133	86	
Selenium	mg/kg	<1.1	<1.1	<1.1	<1.1	<1.1	<1.1	<1.1	5,840	1,745	
Silver	mg/kg	1.33	0.29 J	0.38 J	<0.20	0.41 J	0.41 J	<0.20	5,840	1,770	
Thallium	mg/kg	0.4 J	0.5 J	0.5 J	0.7 J	0.7 J	1.0 J	<0.4	12	4	
Vanadium	mg/kg	11.2	51.4	176	72.1	193	125	54	5,829	466	
Zinc	mg/kg	34.0	66.3	98.1	92.7	73.8	72.3	63.4	350,400	106,182	
STLC WET Metals									Drinking Water ESL	FW Etox	
Antimony	mg/L	0.00023 J	0.00513	<0.00023	0.00032 J	--	--	0.00808	0.006	0.03	
Arsenic	mg/L	0.00160 J	0.00736	0.00057 J	0.00079 J	--	--	0.00326	0.01	0.15	
Barium	mg/L	0.0177	0.187	0.0141	0.360	--	--	0.0866	1		
Beryllium	mg/L	<0.000065	<0.000065	<0.000065	<0.000065	--	--	<0.000065	0.004	0.0027	
Cadmium	mg/L	<0.000063	<0.000063	<0.000063	<0.000063	--	--	<0.000063	0.005	0.25	
Chromium	mg/L	0.0003	<0.0002	0.0099	0.0010 J	--	--	0.0002 J	0.05	0.05	
Cobalt	mg/L	<0.000027	<0.000027	0.00486	0.00013 J	--	--	0.000099 J	0.006	0.003	
Copper	mg/L	<0.00036	<0.00036	0.0198	<0.00036	--	--	<0.00036	1.3	0.009	
Lead	mg/L	<0.00014	<0.00014	0.00015 J	<0.00014	--	--	<0.00014	0.015	0.0025	
Mercury	mg/L	<0.000076	<0.000076	<0.000076	<0.000076	--	--	<0.000076	0.002	0.000051 [1]	
Molybdenum	mg/L	0.00095 J	0.0138	0.00263	0.00028 J	--	--	0.00643	0.24	0.1	
Nickel	mg/L	<0.0005	<0.0005	0.0065	0.0007 J	--	--	<0.0005	0.1	0.052	
Selenium	mg/L	<0.0002	0.0018 J	0.0004 J	<0.0002	--	--	0.0006 J	0.05	0.005	
Silver	mg/L	<0.000061	<0.000061	<0.000061	<0.000061	--	--	<0.000061		0.00034	
Thallium	mg/L	<0.00008	<0.00008	<0.00008	<0.00008	--	--	<0.00008	0.002	0.0002	
Vanadium	mg/L	0.0076	0.0173	0.0296	0.0502	--	--	0.0032	0.05	0.019	
Zinc	mg/L	<0.0027	<0.0027	0.0116	<0.0027	--	--	<0.0027	5	0.12	

Table 3
TTLC, STLC, and ABA Results

	Sample ID	GEO 2-12 40-50'	GEO 2-12 240-250'	GEO 2-13 30-40'	GREEN-1-QUARRY	GREEN-2-WMSA	GREEN-3-EMSA	GR-1-1025 PIT			
	Rock Type	Greenstone	Greenstone	Greenstone	Greenstone	Greenstone	Greenstone	Graywacke	ESLs		
Acid-Base Accounting, Sulfur											
ABA	TCaCO3/kT	854	140	17.1	48.5	38.9	103	44.5			
AGP	TCaCO3/kT	<0.3	0.6	<0.3	<0.3	<0.3	<0.3	1.7			
ANP	TCaCO3/kT	854	140	17.1	48.5	38.9	103	46.2			
Non-extractable Sulfur	%	<0.01	<0.01	<0.01	<0.01	<0.01	<0.01	<0.01			
Non-sulfate Sulfur	%	<0.01	0.02	<0.01	<0.01	<0.01	<0.01	0.05			
Pyritic Sulfur	%	<0.01	0.02	<0.01	<0.01	<0.01	<0.01	0.05			
Sulfate Sulfur	%	<0.01	0.15	<0.01	<0.01	0.02	0.02	0.06			
Total Sulfur	%	<0.01	0.16	<0.01	<0.01	0.02	0.02	0.12			
Paste pH	pH	8.2	8.2	8.1	8.4	8.4	8.1	8.3			
STLC pH	pH	8.95	8.98	9.18	8.94	--	--	8.85			

Notes:
j = estimated value below reporting limit
1 = seafood ingestion ESL
-- = not analyzed

Table 4
Mineralogical Composition

Sample Identification	Rock Type	Units	Quartz	Plagioclase	Dolomite	Chlorite	Calcite	Smectite	Aragonite	Amphibole	Gypsum	Hematite	Diposide	Almandine	K-Feldspar	Mica	Unaccounted
GR-1-1025 PIT	Graywacke	%	38	32	-	13	5	-	-	-	-	<2*	5	<2*	-	4	<5
GEO 2-12 240-250'	Greenstone	%	44	24	-	9	17	-	-	-	-	-	4	-	-	<2*	<5
GEO 2-12 40-50'		%	9	-	-	-	88	-	-	-	-	<2*	-	-	-	-	<5
GEO 2-13 30-40'		%	34	25	-	11	-	-	-	-	-	3	25	-	-	<2*	<5
GREEN-1-QUARRY		%	32	-	-	35	9	-	-	-	-	7	-	-	12	4	<5
GREEN-2-WMSA		%	9	28	11	20	5	-	-	12	-	<2*	12	<2*	-	-	<5
GREEN-3-EMSA		%	12	23	11	17	12	-	-	5	-	<2*	18	<2*	-	-	<5

* - May be present

- = not detected

Table 6
Selenium Sediment Results
Lehigh Permanente Facility
September 2019

Sample Location	Sample Depth (ft)	Date	Total Selenium (mg/kg)	WET Selenium (mg/L)
PD30-SD3	0	6/27/2019	1.4 J	0.0074
PD30-SD3	1	6/27/2019	<0.55	<0.00025
SWALE-SD1	0	6/27/2019	<0.55	
SWALE-SD1	1	6/27/2019	<0.55	
SWALE-SD2	0	6/27/2019	<0.55	
SWALE-SD2	1	6/27/2019	<0.55	

Notes:
J = estimated value below laboratory reporting limit

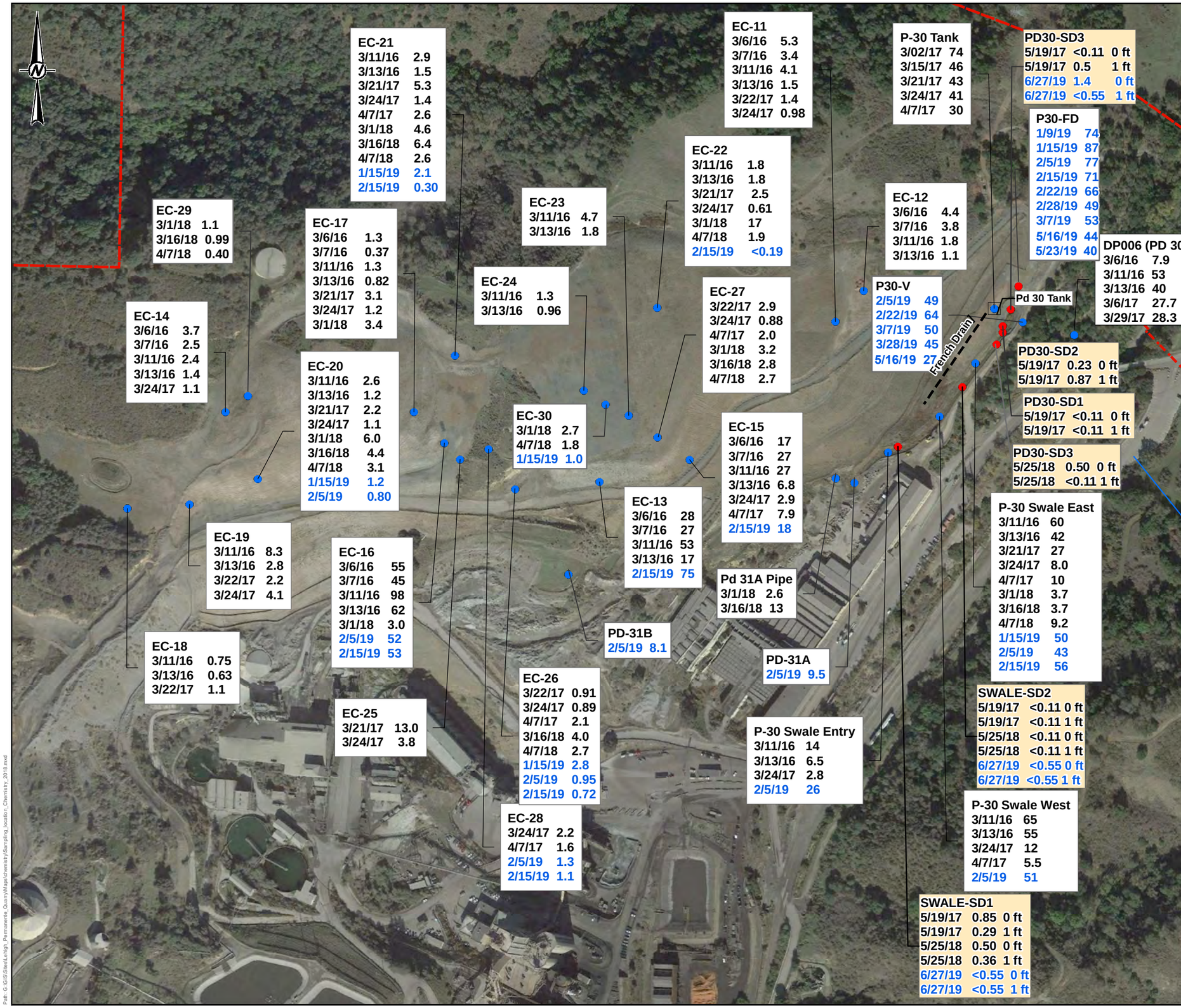

LEGEND

Water Sample

Date Selenium (ug/L)

Sediment Sample

Date Selenium (mg/kg) Depth (ft)

Property Boundary

Samples in blue are from 2019

400 0 400

Feet

REFERENCE

PROJECT

LEHIGH PERMANENTE FACILITY
SANTA CLARA COUNTY, CA

TITLE

SAMPLING RESULTS

CONSULTANT

GOLDER

YYYY-MM-DD	2019-09-25
PREPARED	MR
DESIGN	MR
REVIEW	GW
APPROVED	GW

PROJECT No.	CONTROL	Rev.	FIGURE
063-7109-914	---	---	1

IF THIS MEASUREMENT DOES NOT MATCH WHAT IS SHOWN, THE SHEET HAS BEEN MODIFIED FROM: ANSI B

Path: G:\GIS\Sites\Lehigh_Permanente_Quarry\Maps\chemistry\Sampling_location_Chemistry_2018.mxd

APPENDIX E:

STORMWATER POLLUTION PREVENTION PLAN

REPORT

STORMWATER POLLUTION PREVENTION PLAN

Lehigh Southwest Cement Company, Permanente Plant and Quarry, 24001 Stevens Creek Boulevard, Cupertino, California

Submitted to:

Lehigh Southwest Cement Company and Hanson

Permanente Cement, Inc.
24001 Stevens Creek Blvd.
Cupertino, CA 95014

Submitted by:

Golder Associates Inc.

425 Lakeside Drive, Sunnyvale, California, USA 94085

1665523002

October 15, 2018

Record of Issue

Revision Number	Prepared by	Description of Revision	Date of Revision
	Original Issue Golder	All	May 2014
002	Sam Barket	All	February 2016
003	Sam Barket	Added contact information	June 2016
004	Sam Barket	Updated contact information	December 2016
005	Courtney Perry	General updates.	April 2017
006	Manju Shivalingappa	Updated Contact Information	September 2017
007	Golder Associates, Inc.	Update facility drainage information and Rock Plant Activities	October 2018

Table of Contents

1.0 INTRODUCTION 1

2.0 STORMWATER PLANNING AND ORGANIZATION 2

2.1 Position Responsibilities 2

2.2 Pollution Prevention Team 2

2.2.1 Team Responsibilities 2

2.2.2 Responsible Persons 3

2.3 Other Requirements and Existing Facility Plans 3

3.0 FACILITY DESCRIPTION 3

3.1 Facility Location and Layout 4

3.2 Surrounding Activities and Structures 4

3.3 Site Drainage 4

3.3.1 Pond 13B (Discharge Point No. 002) 4

3.3.2 Pond 9 (Discharge Point No. 003) 5

3.3.3 Pond 17 (Discharge Point No. 004) 5

3.3.4 Pond 20 (Discharge Point No. 005) 5

3.3.5 Pond 30 (Discharge Point No. 006) 6

3.3.6 Reclaim Water System 6

3.4 Locations of Exposed Industrial Activities and Industrial Materials 6

3.5 Erosion Potential 6

4.0 DESCRIPTION AND ASSESSMENT OF INDUSTRIAL ACTIVITIES AND MATERIALS, POTENTIAL POLLUTANT SOURCES, AND POLLUTANTS 7

4.1 Quarry, Primary Crusher, and Cement Plant 7

4.2 Surge Pile 8

4.3 Rock Plant Equipment and Material Storage 8

4.4 Rock Plant Haul Road 8

4.5 EMSA 8

4.6 Truck and Equipment Maintenance 8

4.7 Truck Washing Area 9
4.8 Former Aluminum Plant Equipment Storage 9
4.9 Additional Areas 9
4.9.1 QC Laboratory 9
4.9.2 Wastewater Treatment Plant 9
4.10 Non-Stormwater Discharges 9
5.0 BEST MANAGEMENT PRACTICES 10
5.1 Good Housekeeping 10
5.2 Preventative Maintenance 11
5.3 Spill and Leak, Prevention and Response 11
5.4 Material Handling and Waste Management 12
5.5 Fuel, Oil, Used Oil, and Antifreeze Delivery and Pickup 12
5.6 Leakage of Oil from Stored Equipment and Vehicles 13
5.7 Equipment/Vehicle Fueling 13
5.8 Erosion and Sediment Control 13
5.9 Employee Training Program 13
5.10 Quality Assurance and Record Keeping 14
6.0 ADVANCED STRUCTURAL, SOURCE CONTROL, AND TREATMENT BMPS 14
6.1 Overhead Coverage 15
6.2 Stormwater Detention Basins 15
6.3 Particle Filtration 15
6.4 Secondary Containment 15
6.5 Advanced Erosion and Sediment Control 15
6.5.1 Erosion Control 16
6.5.2 Sediment Control 17
7.0 MONITORING AND REPORTING PROGRAM 18
8.0 REFERENCES 20

TABLES

Table 1: Pollution Prevention Team
Table 2: Materials Inventory
Table 3: Activity, Sources, Potential Pollutants, and Recommended BMPs

FIGURES

Figure 1: Regional Setting

Figure 2: Site Vicinity

Figure 3: SWPPP Site Map Overview

Figure 4: Catchment Discharge Point 002

Figure 5: Catchment Discharge Point 003

Figure 6: Catchment Discharge Point 004

Figure 7: Catchment Discharge Point 005

Figure 8: Catchment Discharge Point 006

Figure 9: Rock Plant Haul Road

APPENDICES

APPENDIX A
BMP Inspection Form

APPENDIX B
Employee Training Log

APPENDIX C
CASQA BMP Handbooks

Stormwater Pollution Prevention Plan (SWPPP)
Project Information and Certification

May 2014
Regional Water Quality Control Board Order No. R2-2014-0010
NPDES Permit No. CA0030210

Project Information

Prepared for: Lehigh Southwest Cement Company and Hanson Permanente Cement, Inc.
24001 Stevens Creek Blvd.
Cupertino, CA 95014

Contact: Keith Krugh, Plant Manager

(408) 996-4231

CIWQS Place No.: 273205

Reviewing Agency

Jurisdiction: Regional Water Quality Control Board, Central Coast Region
Permit Number: CA0030210
Contact: John Madigan, P.E. at (510) 622-2405

Project Engineer

Prepared by: Golder Associates Inc.
425 Lakeside Drive
Sunnyvale, CA 94085
(408) 220-9223
(408) 220-0224 (fax)

Contact: Mark Naugle, PE, TOR-QISP

Project Number: 165523002

Plan Certification

I certify under penalty of law that this document and all attachments were prepared under my direction or supervision in accordance with a system designed to ensure that qualified personnel properly gather and evaluate the information submitted. Based on my inquiry of the person or persons who manage the system, or those persons directly responsible for gathering the information, the information submitted is to the best of my knowledge and belief, true, accurate, and complete. I am aware that there are significant penalties for submitting false information, including the possibility of fine and imprisonment for knowing violations.

Keith Krugh
Plant Manager

10-15-18
Date

1.0 INTRODUCTION

Golder Associates Inc. (Golder) has prepared this Stormwater Pollution Prevention Plan (SWPPP) for the Lehigh Southwest Cement Company's Permanente Plant (Facility) located at 24001 Stevens Creek Blvd., Cupertino, Santa Clara County, California. The Facility is a limestone quarry and cement production facility that also produces construction aggregate. Lehigh Southwest Cement Company operates the Facility, which is owned and Hanson Permanente Cement, Inc., (Lehigh) owns.

The Facility's surface water discharges, including stormwater, are regulated by waste discharge requirements (WDRs) in Order Number R2-2014-0010 and amended per Order No. R2-2017-0030, National Pollutant Discharge Elimination System (NPDES) Permit Number CA0030210 (NPDES Permit).

The NPDES permit prohibits any process water-related discharges except through a single, treated, discharge point (Discharge Point 001, Pond 4A), such that all remaining discharge points are comprised of stormwater and/or authorized non-stormwater.,

Golder has prepared this SWPPP on behalf of Lehigh consistent with Provision C.6.a of the NPDES Permit. The NPDES Permit requires Lehigh to prepare a SWPPP that contains information and describes measures consistent with the requirements in Waste Discharge Requirements for Discharges of Storm Water Associated with Industrial Activities Excluding Construction Activities, NPDES General Permit No. CAS000001 (State Water Board Order No. 97-03-DWQ), Section A, Storm Water Pollution Prevention Plan Requirements (General Permit). The NPDES Permit Provision VI.C.6 also provides SWPPP requirements.

The NPDES prohibitions limit discharges from Discharge Point Nos. 002 – 006 (Ponds 13B, 9, 17, 20, and 30) except as a result of precipitation, or to discharge stored water and the effluent limitations include numerical limits applied to total suspended solids (TSS), oil and grease (O&G), pH, settleable matter, and turbidity. The NPDES Permit also includes stormwater action levels for certain metals, conductivity, visible oil, and visible color that will be considered in this SWPPP.

Stormwater in several drainage areas, or catchment areas, of the Facility are comingled with process waters, and, therefore, the NPDES Permit requires that these catchment areas be discharged through a single, treated discharge point (Discharge Point No. 001). Discharge Point No. 001 is covered under different facility plans.

The purpose of the SWPPP is to protect surface water quality by reducing the amount of pollutants in stormwater runoff for Discharge Point Nos. 002 through 006. The industrial activities at the Facility generally include mining, processing of minerals, production of Portland cement, storage of construction aggregates.

The SWPPP has two major objectives:

- To identify and evaluate sources of pollutants associated with industrial activities that may affect the quality of stormwater discharges from the Facility; and
- To identify and implement site-specific Best Management Practices (BMPs) to reduce or prevent pollutants associated with industrial activities in stormwater discharges.

Preparation of this SWPPP does not guarantee compliance with the NPDES Permit. It is the responsibility of Lehigh to implement the necessary BMPs and recommendations set forth in this document.

This SWPPP has been prepared by Golder for the exclusive use of Lehigh. Golder prepared this SWPPP based upon information provided by Lehigh and a site visit conducted by George Wegmann and Mark Naugle, PE of Golder on April 21, 2014 and Mark Naugle on October 2, 2018. This SWPPP is revised as needed.

2.0 STORMWATER PLANNING AND ORGANIZATION

This section of the SWPPP identifies specific individuals that comprise the Lehigh Pollution Prevention Team (PPT) that are responsible for developing, implementing, and revising the SWPPP. The PPT will review the SWPPP annually and update the SWPPP as necessary. This SWPPP is a public domain document.

2.1 Position Responsibilities

The Plant Manager provides overall management of the implementation of this SWPPP. The Stormwater Team Leader/ Environmental Manager provides coordination of the implementation of this SWPPP.

2.2 Pollution Prevention Team

The PPT will help the Plant Manager implement the SWPPP, identify necessary SWPPP revisions, and conduct required monitoring activities. The Lehigh PPT is further described in the following sections.

Table 1: Pollution Prevention Team

Position	Name	Contact
Plant Manager	Keith Krugh	408-996-4231, 408-318-2727
Area Environmental Manager	Tressa Jackson	408-996-4233, 530-351-4043
Environmental Professional IV	Manjunath Shivalingappa	408-996-4236, 408-650-4782
Environmental Professional IV	Antonio Del Rio	408-996-4197, 408-309-4149
Quarry Manager	George Taylor	408-996-4190, 408-691-8830

2.2.1 Team Responsibilities

The PPT is comprised of several key individuals as shown in Table 1. Each member is listed in the table along with his/her job title and responsibilities. The PPT is responsible for:

- Implementing the SWPPP.
- Assisting in SWPPP maintenance and modification.
- Holding regular meetings to review the overall operation of BMPs.
- Establishing responsibilities for sampling, inspections, operations and maintenance, and availability for emergency situations.
- Arranging for training of all team members in the operation, maintenance and inspections of BMPs.
- Conducting good housekeeping inspections of the Facility. Any spills, leaks or other potential sources of pollutants will be identified and removed.

2.2.2 Responsible Persons

Keith Krugh, plant manager, is the Responsible Person (RP) for stormwater pollution prevention at this facility, and is responsible for oversight of:

- SWPPP development
- Implementation and revision of the SWPPP
- Implementation of monitoring program activities required in the NPDES Permit

The designated Alternate RP, environmental engineer Manju Shivalingappa, will perform these duties in the absence of the RP.

2.3 Other Requirements and Existing Facility Plans

The Facility's air emissions are regulated by a Title V - Major Facility Review Permit issued by the Bay Area Air Quality Management District (BAAQMD). According to BAAQMD Condition 24621, Lehigh maintains and implements a Fugitive Dust Control Plan (Lehigh 2010) consistent with the Title V permit. Control measures identified in this plan will reduce the generation of particulates that could be exposed to stormwater at the Facility.

The NPDES Permit requires that Lehigh develop a Facility Reliability Assurance Plan (FRAP) no later than May 16, 2014 that describes measures in place to ensure the reliability of the Facility's system in preventing inadequately treated wastewater from being discharged and in preventing catastrophic failures of ponds. Wastewater will be referred to herein as process water and includes process water from the Reclaim Water System, Quarry, and Primary Crusher and stormwater which comingles with process water.

The NPDES Permit requires that Lehigh maintain a BMP Plan in usable condition and available for reference and use by all appropriate personnel. The BMP Plan shall be developed and implemented to minimize the potential impact of periodic discharges to Permanente Creek, to prevent the accidental release of toxic or hazardous substances into the environment, and to minimize and mitigate the effects of any such releases using equipment and techniques available and practical for such use. The BMP Plan will be consistent with U.S. EPA's Guidance Manual for Developing Best Management Practices (October 1993, EPA 833-B-93-004) and will, at minimum, include BMPs described in NPDES General Permit No. CAS000001 (State Water Board Order No. 97-03-DWQ), Section A, Storm Water Pollution Prevention Plan Requirements.

Other plans that describe the management of materials and practices at this facility, which may affect the management of stormwater include the following (these plans are NOT a part of the SWPPP).

- Spill Prevention Control and Countermeasure Plan (SPCC)
- Hazardous Materials Business Plan (HMBP)
- Emergency Contingency Plan
- Reclamation Plan Amendments

3.0 FACILITY DESCRIPTION

The following sections describe the Facility layout, industrial activities, and significant materials. Significant materials are those materials that should be considered when assessing potential stormwater pollutants.

3.1 Facility Location and Layout

The Facility is located at 24001 Stevens Creek Road in the southern San Francisco Bay Area, in the foothills of unincorporated western Santa Clara County, just west of the City of Cupertino, California, as shown on Figures 1 and 2. The climate of the southern San Francisco Bay Area is Mediterranean, characterized by mild, wet winters, and warm, dry summers.

Lehigh mines and processes minerals at the Facility and produces Portland cement from limestone and stone quarried onsite. As shown on Figure 2, the Facility consists mainly of an active mining area (quarry), primary crusher, a cement plant, rock plant, material storage areas, roads, and a conveyor system for transporting the processed materials.

3.2 Surrounding Activities and Structures

Land to the west of the Facility is open space. Stevens Creek Quarry is located to the south of the Facility (Figure 2) along with rural residential areas and small agricultural operations including some vineyards. Land uses to the east of the Facility include open space and recreational areas along with residential subdivisions. North of the Facility is open space and recreational areas. The areas surrounding the Facility that might produce run-on include vegetated slopes.

3.3 Site Drainage

The Facility lies within the Permanente Creek watershed. Permanente Creek discharges into southern San Francisco Bay. Precipitation that falls within the Facility is managed within six catchment areas. These catchment areas are shown on Figure 3. The catchment areas are identified by the retention basins or ponds where stormwater runoff within the catchment areas is captured. The ponds discharge via standpipe and culverts to Permanente Creek.

The stormwater discharges are identified in the NPDES permit as Discharge Point Nos. 002 through 006. The stormwater related catchment areas and associated discharge locations are listed below:

- Pond 13B (Discharge Point No. 002)
- Pond 9 (Discharge Point No. 003)
- Pond 17 (Discharge Point No. 004)
- Pond 20 (Discharge Point No. 005)
- Pond 30 (Discharge Point No. 006)

Each of the stormwater drainage areas is described in the following sections. As noted previously, stormwater in several catchment areas (Reclaim Water System including the Cement Plant and Truck Wash) of the Facility are comingled with process waters and is treated and discharged under Discharge Point No. 001. Since 2014, Lehigh has made numerous Facility improvements to divert more stormwater to the Reclaim Water System from the stormwater discharge catchments (Discharge Point Nos. 002 through 006).

3.3.1 Pond 13B (Discharge Point No. 002)

Pond 13B is located upgradient of the north bank of Permanente Creek. Stormwater runoff runs down the slope to Pond 13B. The location of Pond 13B and the associated catchment are provided in Figure 4.

Water in Pond 13B is typically retained, evaporates, and/or infiltrates. Pond 13B also has an overflow pipe to allow direct discharge to Permanente Creek if the water level in the pond reaches the elevation of the overflow pipe. The inlet to the overflow pipe is at the top of the pond side slope at the downgradient end of the pond. The overflow pipe is a 24 inch corrugated metal pipe (CMP) that conveys the overflow waters down the slope, approximately fifty feet, in a controlled fashion, into Permanente Creek. Since at least May 2007, no direct discharge from Pond 13B through this overflow pipe has been observed.

3.3.2 Pond 9 (Discharge Point No. 003)

Pond 9 is located adjacent to a road, near the north bank of Permanente Creek, south of the cement plant. The location of Pond 9 is provided in Figure 5. Formerly, Pond 9 received stormwater runoff from upgradient roads and hillsides, the Surge Pile, the cement plant stockpile storage, upper equipment storage area, and pumped water from the Dinky Shed Catchment. Pond 9 also formerly received excess process and/or stormwater from the Reclaim Water System that was pumped from Pond 11, (which was permitted under the CDO until October 1, 2014).

Because of the presence of the California red-legged frog (a threatened species) discovered in Pond 9, Lehigh has worked to redirect any stormwaters flowing through process areas from reaching the pond. The pond only receives stormwater from adjacent slopes, and upwelling ground or creek water from beneath the pond. A groundwater seep originating near the western portion of the rock plant may reach Pond 9 via a half CMP and drainage swale. The permit was amended to reflect this change, modify the sampling requirements, and remove the effluent limitations and stormwater action levels for this discharge.

The Dinky Shed Catchment may receive stormwater runoff that has been diverted from Pond 9, as well as water from a lower section of the Facility's Rock Plant access road. (Runoff from the upper section of the road flows to Pond 17.) Water from the Dinky Shed Catchment is pumped to Pond 1.

3.3.3 Pond 17 (Discharge Point No. 004)

Pond 17 was designed to discharge stormwater flows from the Rock Plant area into Permanente Creek. The Rock Plant stormwater is diverted toward the Dinky Shed, through Pond 20 (Discharge Point No. 005), and/or Discharge Point No 004 (Figure 6).

In the southern part of the Rock Plant is a haul road that heads south upslope towards Stevens Creek Quarry to the south as shown on Figure 8. The road is graded to drain along a ditch on the west side of the road. About halfway down the road there is a catch basin that collects water in the ditch and discharges to a drain pipe that conveys runoff down the slope and discharges at the bottom of the slope. Runoff from the road then flows overland to Pond 20 or could be diverted to Pond 17.

The stormwater in this area includes rain falling directly on the Rock Plant and the haul road; stormwater from portions of the adjacent hillsides is diverted by pipeline B as to prevent run-on from entering the Rock Plant area.

3.3.4 Pond 20 (Discharge Point No. 005)

Pond 20 is located at the base of a slope south of the historical, non-operational, former Aluminum Plant and general plant entry road. The location of Pond 20 and the associated catchment is provided in Figure 7. Pond 20 is a shallow depression that receives stormwater runoff from the slope, a small section of the road opposite to former Aluminum Plant, and the entry road directly or from Pond 19, which drains the same catchment area. Pond 20 also receives some water from the Rock Plant road. The discharge from Pond 20 continues to flow easterly through vegetation, including Pond 21, and enters Permanente Creek near the entry road overpass. The Pond 20

area contains many BMPs including a lined inlet with multiple gabion basket check dams, flocculent logs, and sodium bisulfite for pH correction. Water diversion speed bumps and sand bags separate process water from industrial stormwater and minimize contact with impurities.

3.3.5 Pond 30 (Discharge Point No. 006)

Pond 30 receives stormwater from the East Materials Storage Area (EMSA) and access roads. The location of Pond 30 and the associated catchment is provided in Figure 8. Stormwater runoff from the access road starting near the cement plant is conveyed downslope alongside the access road and is collected in detention basins (Ponds 31A and 31B) near the top of the slope and is conveyed via pipeline and drainage swales down to Pond 30. The operational areas around the eastern portion of the EMSA have been redirected to route flow into Pond 30. There is an outlet standpipe in Pond 30 that overflows through an underground pipe to a vault equipped with pumps to transport the stormwater to Pond 11 (Reclaim Water System). The stormwater is then treated and discharged via Discharge Point No. 001.

A French drain has been constructed adjacent to Pond 30 and the inlet ditch to intercept underground water flows. This water is also collected in the vault and pumped to Pond 11 for treatment before discharge.

3.3.6 Reclaim Water System

The Reclaim Water System is a combination of industrial stormwater and process water from the Quarry, Primary Crusher, Cement Plant, and Truck Wash. Further detail about the Reclaim Water System sources is included in the Pollution Prevention Plan.

3.4 Locations of Exposed Industrial Activities and Industrial Materials

Significant industrial activities and materials that could be exposed to stormwater in catchment areas for Discharge Point Nos. 002, 004, 005, and 006 include:

- Settled dust and particulate matter from mining of limestone and overburden in the Quarry
- Settled dust and particulate matter from rock crushing at the Primary Crusher
- Onsite material transport by trucks along facility roads
- Fueling and servicing of equipment and vehicles
- Settled dust and particulate matter from cement processing

The locations of these activities and materials are shown on Figure 3.

3.5 Erosion Potential

The Facility is primarily unpaved, except for in the cement plant area. Erosion of non-vegetated areas can cause sediment mobilization and increased sediment loading in stormwater discharges. Additional sources of disturbed sediments include erosion from haul roads. Most of the drainage pathways at the Facility flow toward retention ponds or are pumped from low lying areas into the respective retention ponds.

4.0 DESCRIPTION AND ASSESSMENT OF INDUSTRIAL ACTIVITIES AND MATERIALS, POTENTIAL POLLUTANT SOURCES, AND POLLUTANTS

The NPDES Permit establishes the monitoring program for stormwater and includes discharge limitations or action levels for the following potential stormwater pollutants:

- Discharge Limitations:
- total suspended solids (TSS)
- oil and grease (O&G)
- pH
- settleable matter
- turbidity
- Action Levels:
- conductivity
- metals: chromium VI, mercury, nickel, selenium, thallium
- visible oil
- visible color

Industrial activities and materials at the facility that are potential sources of these pollutants include: materials the facility mines, crushes, transports, and processes; materials storage; equipment fueling and maintenance; truck and equipment transport, repairs, maintenance, and washing; settled dust and particulate matter resulting from facility operations; and wastewater treatment.

Lehigh mines and processes limestone at the facility and produces Portland cement. Overburden and limestone that are not suitable for cement manufacturing is deposited in materials storage areas. Finished Portland cement is shipped by bulk truck or trucked in bags to offsite commercial markets. Additionally, regulated hazardous materials are stored at the facility for use in all aspects of facility operations. An HMBP for the facility has been prepared and a copy is kept onsite and provided to local enforcement agencies.

Table 2 lists materials used outside of the Reclaim Water System and Discharge Point 001 that could be potential stormwater pollutants. The table provides a summary of industrial activities where stormwater run-off could originate along with potential sources of pollutants, potential pollutants, and the BMPs to prevent pollutants from entering the stormwater discharges. (Note, the Reclaim Water System and Discharge Point 001 are included in the PPP and BMP Plan). The most likely sources of stormwater pollutants are industrial processes that result in the release of dust and particles, oil and grease, metals, and high pH liquids. Potential pollutant sources are discussed further by area and process in the following sections.

4.1 Quarry, Primary Crusher, and Cement Plant

As discussed in Section 1.0 and 3.3, the catchment areas that include stormwater from the Quarry, and Cement Plant are not included in this SWPPP; however, dust generated from activities in these areas can migrate to other

catchment areas, settle on exposed surfaces and potentially pollute stormwater. Fugitive dust emissions are controlled by implementing the Fugitive Dust Control Plan (Lehigh 2010). Also, as identified in Table 3, the Facility frequently sweeps paved areas to remove settled dust.

4.2 Surge Pile

Rock sourced from the quarry operation is stockpiled in the Surge Pile. Stormwater contacting the Surge Pile can be exposed to pollutants including TSS, high pH, settleable matter, turbidity, conductivity, and metals. Stormwater runoff is conveyed through a drainage ditch along an access road to Dinky Shed and/or Pond 20. Several rock check dams within the ditch slow the runoff flows to reduce the particulate loading in this runoff water.

4.3 Rock Plant Equipment and Material Storage

The Facility stores inactive vehicles, tires, and equipment including process equipment in this area, which is located along the western portion of the Rock Plant. The Facility also stores aggregate material mainly at the western and southern portions of it. The equipment and material are stored outdoors and exposed to stormwater. Stormwater in this area may be exposed to TSS, O&G, settleable matter, turbidity, conductivity, metals, visible oil, and visible color. Stormwater from this area flows to either Pond 17, Dinky Shed or Pond 20. The Facility maintains BMPs to reduce the flow velocity to reduce the amount of particles in the stormwater. As part of good housekeeping procedures outlined in Section 5.0, these materials will be removed or covered.

4.4 Rock Plant Haul Road

The haul road is located south of the Rock Plant and heads south, upslope, towards Stevens Creek Quarry. (Figure 9). The road is graded to drain along a ditch containing check dams, on the west side of the road. About halfway down the road there is a catch basin that collects water in the ditch and discharges to a drain pipe that conveys runoff down the slope and discharges at the bottom of the slope. Conveying runoff in a pipe reduces erosion of the ditch. Exposed slopes created during construction of the road have been hydroseeded and straw wattles have been placed perpendicular to the slopes to reduce erosion and sediment migration.

4.5 EMSA

Soils and rock types not used in the cement process that are also mined are collectively described as overburden. Overburden and any unsuitable limestone have been deposited in the EMSA according to a design described in the Quarry Reclamation Plan. Stormwater contacting the EMSA may be exposed to pollutants including TSS, high pH, settleable matter, turbidity, conductivity, and metals. Stormwater runoff from the EMSA flows through two retention ponds (Ponds 31A and 31B), drainage ditches, and culverts to Pond 30 to settle particles and reduce potential pollutants before discharge. The entire EMSA was covered with non-limestone materials and hydroseeded in 2016 to reduce the risk of stormwater exposure to limestone. EMSA has multiple rock check boxes and water bars along the roads.

As noted previously, the Pond 30 discharge is diverted to the Reclaim Water System.

4.6 Truck and Equipment Maintenance

Heavy equipment and trucks are used, repaired, and maintained at the Facility. Routine fueling and maintenance are performed in specific maintenance and fueling areas that are in catchment areas not included in this SWPPP; however, repairs and maintenance can occur at any location of the facility due to equipment malfunction or due to operational constraints. Materials stored in the covered fuel and maintenance area or on the quarry service trucks that may pollute stormwater include diesel fuel, new and used motor oil, miscellaneous lubricants, hydraulic fluids,

and anti-freeze. These materials are delivered to the site on an as-needed basis. The site maintains an SPCC plan in regard to spill prevention of petroleum materials, including providing SPCC procedures to third party suppliers.

Leaks and spills of oil from containers and filters during transfer operations can expose stormwater to pollutants. Leaks and spills of oil from the tanks or drums could expose these materials to stormwater. Oil and fluid leaks from equipment during Facility operations could expose these materials to stormwater. The potential sources of stormwater pollutants from truck and equipment maintenance include:

- Leaks and spills of petroleum products during transfer operations
- Leaks and spills of used oil from the tank and drums
- Leaking of oil and fluids from trucks

4.7 Truck Washing Area

The Facility maintains wheel and vehicle washers near the Facility entrance. The washwater is collected and pumped to the Reclaim Water System. Customer vehicles and/ or equipment pass through the washers to prevent track-out onto public roads. Facility vehicles also pass through the washer before exiting the Facility. This area is routinely inspected to ensure washwater is contained and properly conveyed to the Reclaim Water System.

4.8 Former Aluminum Plant Equipment Storage

In an area directly northwest of the former Aluminum Plant, the Facility stores process equipment. The equipment is stored outdoors and is exposed to stormwater. Stormwater in this area appears to pond adjacent to the Former Aluminum Plant and may be exposed to TSS, O&G, settleable matter, turbidity, conductivity, metals, visible oil, and visible color.

4.9 Additional Areas

4.9.1 QC Laboratory

The Facility includes a materials testing or Quality Control (QC) Laboratory located along the northeast portion of the site (Figure 3). Chemical storage is indoors; however, raw materials including gravel are currently stored outdoors at the QC Laboratory Parking Lot.

4.9.2 Wastewater Treatment Plant

The Facility operates a small wastewater treatment plant to treat domestic wastewater (sewage). This plant is permitted, and discharges effluent to a thickener tank to be used as part of the Reclaim Water System. Sodium Hypochlorite and Chlorine tablets are stored within this plant under cover and in secondary containment. While not anticipated to be significant in amount, any stormwater runoff from the Wastewater Treatment Plant will be directed to the western access road and discharged through Pond 20.

4.10 Non-Stormwater Discharges

The Facility will implement measures to ensure non-stormwater process water discharges in contact with industrial areas do not occur.

5.0 BEST MANAGEMENT PRACTICES

Non-structural, or operational, BMPs generally consist of processes, prohibitions, procedures, schedule of activities, etc., that reduce potential for exposure of stormwater discharges. The following BMPs are applicable to Facility activities within catchments for Discharge Points Nos. 002 through 006. The Facility activities and associated BMPs are summarized on Table 3. Additionally, as noted in Section 2.3, a separate BMP Plan will be prepared and maintained at the Facility.

5.1 Good Housekeeping

The Facility will implement the good housekeeping BMPs described below.

- Observe all outdoor areas associated with industrial activities including stormwater discharge locations, drainage areas, conveyance systems, waste handling/disposal areas, and perimeter areas impacted by off-Facility materials or stormwater run-on to determine housekeeping needs. Any identified debris, waste, spills, tracked materials, or leaked materials shall be cleaned and disposed of properly.
- Before the wet season, inspect storm drain inlets and other conveyances, sedimentation traps and basins, retention ponds, and other BMPs in place at the Facility to assess efficacy. Remove accessible deposited sediment or debris as needed.
- Sweep paved areas of the Facility daily during the storm season (October 1 through May 30) and weekly during the remainder of the year. Use a regenerative truck sweeper and sweep inaccessible areas by hand. Conduct comprehensive and focused sweeping of paved areas before forecasted rain events.
- Place drip pans under equipment stored or parked for a week or longer.
- Minimize or prevent materials tracking.
- Minimize or reduce dust generated from industrial activities.
- Ensure that Facility areas impacted by rinse/wash waters are cleaned as soon as possible.
- Cover stored industrial materials that can be readily mobilized by contact with stormwater.
- Contain stored easily transported industrial materials (liquid, powder, etc.) that can be transported or dispersed via wind or contact with stormwater.
- Prevent disposal of any rinse waters, wash waters, or industrial materials into the stormwater system.
- Minimize or reduce stormwater discharges from non-industrial areas (e.g., stormwater flows from upland, non-industrial areas or from employee parking area) that contact industrial areas of the Facility.

Good housekeeping measures are implemented in the maintenance areas to avoid spills or leaks being tracked outside. Per the Facility's SPCC Plan (LFR Inc. 2006), the following activities occur:

- A member of the PPT observes parking lots, driveways, and storage areas and removes trash and debris on a regular basis.
- Oils, other liquids, chemicals and used oils/liquids are stored in labeled containers with tight-fitting lids and secondary containment in the maintenance area or appropriate storage area.

- Suitable spill kits are maintained near the maintenance area and oil storage area.
- Facility personnel promptly implement established spill cleanup procedures for leaks and spills. These procedures are detailed in the SPCC Plan.
- In the event that vehicle or movable equipment maintenance or repairs are performed in uncovered areas, a member of the PPT inspects the area where the maintenance or repair occurred and ensures that waste products, including pollutant-containing fluids deposited or spilled on the ground as a result of the maintenance or repair are cleaned up.

Additionally, per the Reclamation Plan, the BMPs within the reclamation plan boundary are inspected during the rainy season at least once a month and after any significant rain event[1].

5.2 Preventative Maintenance

The Facility implements the preventative maintenance procedures described below.

- Identify equipment and systems used outdoors that may spill or leak potential stormwater pollutants
- Observe the identified equipment and systems to detect leaks, or identify conditions that may result in the development of leaks
- Establish an appropriate schedule for maintenance of identified equipment and systems
- Establish procedure for prompt maintenance and repair of equipment, and maintenance of systems when conditions exist that may result in the development of spills of leaks

A member of the PPT performs monthly visual inspections using checklists that include checking for signs of deterioration of equipment, containers, and metal accessories that are stored outside. The inspection identifies corrosion, structural failure, spills, leaks, etc. and equipment is repaired/ replaced as needed. The Facility performs inspections consistent with the SPCC, the HMBP, and this SWPPP. An example SWPPP BMP inspection form is included in Appendix A. Completed forms can be maintained in Appendix A and must be maintained for five years.

5.3 Spill and Leak, Prevention and Response

The Facility implements the spill prevention procedures described below consistent with the Facility SPCC and HMBP.

- Establish procedure and/or controls to minimize spills and leaks.
- Develop and implement spill and leak response procedures to prevent industrial materials from discharging through the stormwater conveyance system. Spilled or leaked material shall be cleaned and disposed of properly.
- Identify and describe all necessary and appropriate spill and leak response equipment, location(s) of spill and leak response equipment, and spill or leak response equipment maintenance procedures.
- Identify and train appropriate spill and leak response personnel

[1] Completed by facility environmental personnel, contractor personnel, or both

Facility personnel properly label and use lids to seal cans and drums storing liquids and use spigots, pumps, and funnels to dispense and transfer liquids to reduce the possibility of spills. Drip pans or other protective devices are used for liquid transfer operations to catch incidental spillage and drips from dispensing products from drums, barrels, or dispenser pumps. Used liquids, including petroleum hydrocarbons and coolant, are stored under cover and within secondary containment pending removal by a hazardous waste disposal contractor. Containers of products like paint, solvents, or cleaners are completely emptied before disposal in the solid waste garbage, returned to the supplier, or handled as hazardous waste if not empty. Spill cleanup kits are maintained near the material storage areas consistent with the SPCC.

If required, spills must be immediately reported to proper authorities. Reporting is required for spills of oil or hazardous substances greater than the reportable quantities described in CFR Title 40, Parts 302.4 and 117 and the Facility's SPCC and HMBP. Forms for describing significant spills and leaks and recording response procedures are included in the Facility's SPCC and HMBP.

5.4 Material Handling and Waste Management

The following material handling and waste management procedures are implemented as described below.

- Control dust generation by implementing the control measures in the Fugitive Dust Control Plan (Lehigh 2010).
- Prevent or minimize handling of industrial materials or wastes that can be readily mobilized by contact with stormwater during a storm event.
- Cover waste disposal containers and materials storage containers when not in use.
- If practicable, cover outdoor materials 48 hours ahead of likely storm events forecast at 50 percent or greater probability.
- Divert run-on and stormwater generated from within the Facility away from all stockpiled materials.
- Clean all spills of industrial materials/wastes that occur during handling in accordance with the spill response procedures in the Facility's SPCC and HMBP.
- Observe and clean as appropriate, any other material/waste handling equipment or containers that can be contaminated by contact with industrial materials or wastes.

Equipment leak prevention and spill cleanup procedures are discussed in Sections 5.2 and 5.3.

5.5 Fuel, Oil, Used Oil, and Antifreeze Delivery and Pickup

Fuel, oil delivery and used oil and used antifreeze pickup are attended by a Facility representative. The lower-most drain and outlets of delivery vehicles are inspected for evidence of leakage prior to filling and prior to departure. The ground surface is inspected for spills and drips and corrective action is taken as needed. The drains and outlets are tightened, adjusted, or replaced to prevent liquid discharge while in transit. If a spill due to a hose connection/equipment failure were to occur, the spilled material would be contained using spill kit material, and the resulting contaminated clean-up materials would be transferred to a storage container for off-site disposal. These procedures as well as a notification to vendors providing these services are included in the Facility's SPCC plan.

5.6 Leakage of Oil from Stored Equipment and Vehicles

Occasionally fuel, hydraulic oil, or engine oil may drip from stored vehicles and equipment. Any such leakage should be identified during daily inspection of the Facility and reported to the Stormwater Team Leader so that corrective actions can be taken to:

- Repair the equipment to eliminate the leak
- Contain the leak, using absorbent “diapers” or pads, or a pan or bucket, until equipment can be repaired
- Containerize and properly dispose of used absorbent materials, and replace that material used in the spill kit

5.7 Equipment/Vehicle Fueling

Equipment and vehicle fueling activities have the potential to contribute spillage of gasoline or diesel fuel. To ensure this activity does not contribute to hydrocarbon contamination of stormwater, the following BMPs are implemented and these activities are performed consistent with the Facility’s SPCC:

- Fueling during heavy rainfall events should be avoided (when possible).
- Fueling of equipment or vehicles will be attended by an operator.
- Spill response kits with appropriate absorbent materials (oil dry, absorbent booms and pillows/pads) will be maintained and absorbents deployed at the time of a spill to insure complete and immediate clean up.
- Used absorbent materials will be containerized and properly disposed of and materials used will be replaced in the spill kit.

5.8 Erosion and Sediment Control

The majority of the Facility ground surface is unpaved. To prevent soil erosion and sediment transport in stormwater, the Facility implements the erosion and sediment control procedures described below to the extent practicable.

- Maintain effective perimeter controls; site entrances and exits are paved and swept to control discharges or tracking of erodible materials
- Control dust generation by implementing the control measures in the Fugitive Dust Control Plan (Lehigh 2010)
- Divert runoff from within the Facility away from erodible materials
- Maintain drainage and erosion control systems and all-weather working surfaces at the site
- Maintain vegetation on intermediate slopes, including track walking, hydroseeding and placement of mulch or straw on sparsely vegetated inactive earth surfaces prior to October 1 of each year. Advanced erosion and sediment control, structural controls, and specific implementation details are also discussed in Section 6.

5.9 Employee Training Program

The Facility implements the employee training program procedures described below and consistent with the SPCC and HMBP.

- Ensure that all team members implementing the various compliance activities in the SWPPP are adequately trained to implement the requirements of the NPDES Permit, including but not limited to: BMP implementation, BMP effectiveness evaluations, visual observations, and monitoring activities.
- Prepare or acquire appropriate training manuals or training materials
- Identify which personnel need to be trained, their responsibilities, and the type of training they shall receive
- Provide a training schedule
- Maintain documentation of all completed training classes and the personnel that received training in the SWPPP

The Facility has an established training program. The PPT will provide annual training for current and future employees. The PPT will provide training for new employees within 30 days. This training will include good housekeeping procedures, preventive maintenance, spill prevention and response, BMP maintenance, and record keeping.

Facility employees that have direct responsibilities in areas of the Facility that have the potential to impact stormwater will receive SWPPP training annually. More frequent training will be conducted as necessary to address employee turnover. All PPT and employee training is to be documented and the records will be stored with the SWPPP. Records of employee training are to be kept for at least 5 years. Employee training records may be kept on the form provided in Appendix B.

5.10 Quality Assurance and Record Keeping

The Facility implements the quality assurance and record keeping procedures described below.

- Develop and implement management procedures to ensure that appropriate staff implements all elements of the SWPPP, including the monitoring and reporting program in the NPDES Permit
- Develop a method of tracking and recording the implementation of BMPs identified in the SWPPP (BMP Inspection and Preventative Maintenance Log, Appendix A)
- Maintain the BMP implementation records, training records, and records related to any spills and clean-up related response activities for a minimum of five (5) years

The PPT or plant manager is responsible for ensuring that all elements of the SWPPP are implemented, that BMP implementation is tracked and recorded, and that all records required by the NPDES Permit and SWPPP are maintained for a minimum of 5 years. Quality assurance activities undertaken will be documented and entered into the SWPPP records.

6.0 ADVANCED STRUCTURAL, SOURCE CONTROL, AND TREATMENT BMPS

Structural BMPs are to be considered when non-structural BMPs have been ineffective. Structural BMPs consist of structural devices that reduce or prevent pollutants in stormwater discharges. Examples include:

- Overhead coverage
- Retention ponds, basins or surface impoundments

- Berms or other run-on/run-off channeling devices
- Secondary containment structures
- Treatment through inlet controls, filtration, or vegetative swales that reduce the pollutants in surface waters discharged from the site

The following structural controls are implemented at the Facility.

6.1 Overhead Coverage

The Facility stores petroleum products and other fluids and materials associated with equipment maintenance under cover to the extent practicable. This overhead coverage reduces or prevents the potential for stormwater pollutants associated with these activities from contacting or entering stormwater. These potential pollutants include TSS, O&G, metals, and visible oil.

6.2 Stormwater Detention Basins

Several stormwater detention basins are located at the Facility: Pond 9, Pond 13B, Pond 17, Pond 30, Pond 31A, Pond 31B, and SB-7. The locations of the stormwater detention basins are shown on Figure 3 and more detailed views are shown on Figures 4 through 9. Pond 20, given its configuration as a drainage throughput, and not a traditional “pond,” and does not contain freeboard necessary to accomplish retention of stormwater flows.

Detention basins allow particulates to settle before stormwater is discharged. Potential pollutants mitigated by the retention basins include TSS, settleable matter, turbidity, conductivity, and metals. Annual sediment removal from these basins should be performed to maintain retention capacity and reduce potential pollutant exceedances associated with particulates.

6.3 Particle Filtration

The Facility implemented BMPs to aid in the filtration of stormwater runoff. For example, several gravel check dams were installed along Discharge Point No. 005 drainage to promote filtering of the stormwater prior to discharge.

6.4 Secondary Containment

The Facility uses secondary containment for the storage of petroleum products and other fluids and materials associated with equipment maintenance and hazardous materials. The secondary containment reduces or prevents the potential exposure of these materials to stormwater.

6.5 Advanced Erosion and Sediment Control

Activities that generate the potential for erosion and sediment migration include transport and storage of limestone, unsuitable limestone, and overburden rock and soil. Operations at the site expose slopes and access roads to erosion. Erosion or sediment controls are generally commenced as soon as practicable following completion of soil/ rock disturbing activities. The storm water drainage systems in place have been designed to divert storm water away from operational areas and to stormwater retention basins.

Specific narrative descriptions of BMPs that are implemented at the Facility, to the extent practicable, are listed by category in each of the following sections. Additionally, a copy of the California Stormwater Quality Association (CASQA) BMP Handbook fact sheets for erosion and sediment control BMPs for implementation guidance and reference is attached as Appendix C.

6.5.1 Erosion Control

Erosion control, also referred to as soil stabilization, consists of source control measures that are designed to prevent soil particles from detaching and becoming transported in stormwater runoff. Erosion control BMPs protect the soil surface by covering and/or binding soil particles. The Facility will incorporate erosion control measures that are effective and result in the reduction of sediment related pollutants in stormwater discharges. The Facility will implement the following practices for effective temporary and longer-term erosion control during soil disturbing activities:

- Preserve existing vegetation where practicable and when feasible.
- Implement temporary erosion control measures with focused implementation prior to the wet season.
- Stabilize non-active areas prior to the wet season.
- Control erosion in concentrated flow paths by applying erosion control products and maintaining swales as required.
- Apply hydroseed for vegetation development or other longer-term erosion control such as non-limestone rock to areas deemed available for longer-term controls (e.g. areas no longer planned for soil disturbance).

Sufficient erosion control materials will be maintained on-site to allow implementation in conformance with the SWPPP. This includes implementation of BMPs in active areas and non-active areas before the onset of rain.

The BMPs that should be considered for implementation to prevent erosion include:

- Scheduling: Operating activities will be scheduled with the incorporation of both soil stabilization and sediment control measure BMPs to reduce the discharge of pollutants. The schedule will limit exposure of disturbed soil to wind, rain, and stormwater run-on and run-off where practicable.
- Preservation of Existing Vegetation: Existing vegetation will be maintained to the extent practicable.
- Hydroseeding: Hydroseeding or other longer-term erosion control such as placement of non-limestone rock will be applied in areas deemed available for longer-term controls to protect disturbed soil areas from soil erosion. The hydroseeding materials will be applied after final grading operations. The application of hydroseeding materials will be performed in accordance with manufacturer’s specifications.
- Geotextile and Mats: Geotextile, erosion control matting (ECM), or non-limestone rock should be installed in all v-ditches where the erosive potential exceeds the resistance of the native compacted soil; the application of ECM will be performed in accordance with manufacturer’s specifications. ECMs, should not include any synthetic component because of this material's potential adverse impact to Wildlife
- Slope Protection:
- Slope drains consist of a pipe used to intercept and direct surface runoff into a stabilized watercourse, trapping device, or retention basin. Slope drains are used with earth dikes and drainage ditches to intercept and direct surface flow away from slope areas to protect cut or fill slopes.
- Compost Blankets can be applied to protect disturbed soil areas from soil erosion, and can be used as an alternative to hydroseeding, particularly on steeper slopes.
- Soil Binders

- Soil binding consists of application and maintenance of a soil stabilizer to exposed soil surfaces including unpaved roads. Soil binders are materials applied to the soil surface to temporarily prevent water and wind induced erosion of exposed soils. Examples of soil binders that are recommended include:
- Earthguard®: a useful soil stabilizing emulsion specifically formulated to reduce erosion and sediment runoff. Earthguard can be applied by water truck or by spray application.
- Gorilla-Snot®: a useful biodegradable liquid copolymer used to stabilize and solidify any soil or aggregate as well as provide erosion control and dust suppression.
- Posi-Shell®: a spray-applied, mineral mortar coating, similar to stucco that is the ideal erosion control solution when immediate performance is imperative. Posi-Shell effectively stabilizes steep slopes, controls dust and controls erosion.

6.5.2 Sediment Control

Sediment controls are structural measures that are intended to complement and enhance the selected erosion control measures and reduce sediment discharges from disturbed soil areas. Sediment controls are designed to intercept and settle out or filter soil particles that have been detached and transported by the force of water.

Sufficient quantities of temporary sediment control materials will be maintained on-site to allow implementation of temporary sediment controls in the event of predicted rain and for rapid response. This includes implementation requirements of BMPs in active areas and non-active areas that require deployment before the onset of rain. The BMPs that should be considered for implementation to prevent sediment migration from disturbed soil areas include:

- Fiber Rolls (or straw wattles): Fiber rolls or straw wattles can be installed surrounding the entire outside perimeter of the disturbed soil area as well as surrounding stockpiles. Fiber rolls should be placed along the toe, top, face, and at grade breaks of exposed and erodible slopes to shorten slope lengths and spread runoff as sheet flow Fiber rolls, should not include any synthetic component because of this material's potential adverse impact to Wildlife.
- Check Dams: Check dams are small dams, which can be either temporary or permanent, built across a minor channel, v-ditch, swale, bioswale, or larger drainage ditch. Check dams reduce erosion and gullying in the channel or ditch and allow sediments and pollutants to settle by slowing down the surface waters.
- Gravel Bag Berm: Gravel bag berms can be installed along the down gradient perimeter of disturbed soil areas to prevent run-off if there is a sufficient structural base for support and stabilization of the gravel bags. Gravel bags can also be used alongside access roads to reduce flow velocities and settle out particles.
- Sweeping: Paved areas will be swept daily during the storm season (October 1 through May 30) and weekly during the remainder of the year. The Facility uses a truck sweeper and sweeps inaccessible areas by hand. Comprehensive and focused sweeping of the paved areas is conducted before anticipated rain events.
- Storm Drain Inlet Protection: Drain inlets (DIs) within the facility should receive drain inlet protection. The DIs will consist of filter fabric (inverse witches' hats) to filter out any sediment and pollutants before run-off enters the storm drainage systems. DI protection will be installed in a manner that will not cause ponding or pose a threat to traffic safety. If ponding does cause an issue, the source of the ponding will be identified and corrective actions taken if necessary. During critical operations where potential exists of non-stormwater

entering the storm drain inlet, the inlet should be sealed off with urethane sheets, plastic covers, or an equivalent product. Once the critical operation is completed the DIs should be opened up again.

- Flocculent: Flocculent use may need to be approved by the RWQCB. Floc logs introduce a flocculent into the stormwater to promote and accelerate sedimentation in the stormwater basins. The placement of floc logs should be upstream of the stormwater basins to introduce the flocculent upstream, so it is well mixed with the surface water run-off.

7.0 MONITORING AND REPORTING PROGRAM

The monitoring and reporting program (MRP) is provided in Attachment E to the NPDES Permit. The NPDES Permit Section VI.C.6.a includes requirements for this SWPPP and an annual report. According to VI.C.6.b, the Annual Stormwater Report must be submitted by July 1 providing data for the previous wet weather season. The Annual Stormwater Report will include, at a minimum, the following:

- tabulated summary of all sampling results and a summary of visual observations taken during inspections;
- comprehensive discussion of the compliance record and any corrective actions taken or planned to ensure compliance with this Order; and
- comprehensive discussion of source identification and control programs for constituents that do not have effluent limitations (see action levels Section 4.0).

8.0 REFERENCES

Golder Associates Inc. (Golder). 2014. Facility Reliability Assurance Plan Lehigh Southwest Cement Company Permanente Plant and Quarry, 24001 Stevens Creek Boulevard, Cupertino, California. May 16, 2014.

Lehigh Southwest Cement Company Permanente Cement Plant (Lehigh). 2010. Fugitive Dust Control Plan. September 10, 2010. Revised January 20, 2011.

LFR Inc. 2006. Spill Prevention, Control and Countermeasures (SPCC) Plan. June 21, 2006. Revised by Lehigh November 10, 2011.

Tables

Table 2: Materials Inventory

Product or Material	Maximum Quantity	Handling Frequency	Storage Method	Storage Location	Receiving Location	Shipping Location	Likelihood of Contact with Stormwater[1]
Materials Testing Chemicals and Wastes (Liquids)	<100 gallons	Daily	Inside Building	QC Lab	Same	NA	Unlikely
Materials Testing Chemicals (Solids)	<50 kg	Daily	Inside Building	QC Lab	Same	NA	Unlikely
Waste Material Storage		Daily	Stockpile	East Material Storage Area and Rock Plant	Same	NA	Likely
Limestone		Daily	Stockpile	Surge Pile	Same		Likely
Limestone		Daily	Stockpile	Cement Plant Stockpile Storage	Same		Likely
Chemsearch High Core-Petroleum	275 gallons	Daily	Inside Building	Electrical, Vehicle and Equipment Storage	Same	NA	Unlikely
D-Limonene	165 gallons	Daily	Inside Building	Electrical, Vehicle and Equipment Storage	Same	NA	Unlikely
Lubricating Oil	5,500 gallons	Daily	Inside Building	Electrical, Vehicle and Equipment Storage	Same	NA	Unlikely
Grease	2,475 gallons	Daily	Inside Building	Electrical, Vehicle and Equipment Storage	Same	NA	Unlikely
Petroleum Contaminated (Oil and Grease) Debris	2,000 pounds	Daily	Waste dumpster	Electrical, Vehicle and Equipment Storage, Oily Debris Waste Dumpsters	Same	NA	Possible
Sodium Hypochlorite Solution	360 gallons	Daily	AST	Sewage Treatment Plant, Water Treatment Area	Same	NA	Unlikely

Notes:

1. Likelihood determined based on storage method; unlikely - stored indoors or under permanent cover, possible - temporary cover, likely - uncovered.

Table 3: Activity, Sources, Potential Pollutants, and Recommended BMPs

Activity	Source	Potential Pollutant	Recommended BMPs
Equipment repair and maintenance. Parking and maintenance of trucks	Potential equipment spills and leaks	O&G Visible Oil	Minimize equipment service outside of maintenance area during wet weather
			Use dry cleanup methods, sweep paved areas of the Facility daily during the storm season (October 1 through May 30) and weekly during the remainder of the year and conduct focused and comprehensive sweeping before forecasted rain events.
			Implement proper spill prevention control measures
			Train employees on proper cleanup and spill response
			Prohibit hosing off driveways, parking lots, and other paved areas unless contained and disposed to sanitary sewer
			Apply absorbent pads to leaks or spills, then properly dispose. Properly maintain all vehicles to prevent leakage
			In the event that vehicle or movable equipment maintenance or repairs are performed in uncovered areas, Inspect the area where the maintenance or repair occurred and cleanup waste products, including pollutant-containing fluids deposited or spilled on the ground.
Waste material storage	Erosion and sediment migration, track out of materials, dust migration and settlement	TSS, pH, settleable matter, turbidity, metals, conductivity, visible color	Implement control measures in the Fugitive Dust Control Plan
			Maintain all drainage and erosion control systems and all-weather working surfaces at the site
			Phase placement operations to ensure that non-limestone materials are placed on top of limestone waste materials
			Temporarily stabilize active, disturbed reclamation areas undergoing reclamation fill placement before and during rain events expected to produce runoff. Stabilization methods include combined BMPs that protect materials from rain, manage runoff, and reduce erosion. Do not perform reclamation activities involving grading, hauling, and placement of backfill materials during wet weather
			Cover active haul roads with non-limestone materials where exposed limestone surfaces are present when safe and necessary
			Stabilize inactive areas, such as temporary stockpiles or inactive excavations using an appropriate combination of BMPs to cover the exposed rock material, intercept runoff, reduce its flow velocity, and provide a sediment control mechanism (such as silt fencing, fiber rolls, or hydroseeded vegetation). Standard soil stabilization BMPs include sedimentation basins, geotextiles, mats, erosion control blankets, vegetation, silt fence surrounding the stockpile perimeter, and fiber rolls at the base and on side slopes.
			Divert all runoff generated from disturbed active and inactive reclamation areas to temporary basins or temporary vegetated infiltration basins. Divert drainage from non-limestone materials directly to sediment control facilities.
			Install up-gradient berms where limestone fines or stockpiles are placed, to protect against stormwater run-on, and install ditches and down-gradient berms to promote infiltration rather than run-off.
			Replace the limestone rock and materials that are currently used in the existing BMP ditches and cover or otherwise separate runoff from limestone rock in the existing sediment pond embankments. Reconstruct or reline all existing stormwater conveyances and check dam structures that are constructed or lined with limestone rock using non-limestone material (e.g. greenstone, breccias, greywacke, metabasalt).
			Cover large limestone surfaces that would remain exposed during the rainy season with interim covers composed of non-limestone rock types
Truck traffic	Potential spills and leaks, track out of materials, dust generation	O&G, TSS, Conductivity, pH, Settleable Matter, Turbidity, Metals, Visible Oil	Implement control measures in the Fugitive Dust Control Plan
			Use dry cleanup methods, sweep paved areas of the Facility daily during the storm season (October 1 through May 30) and weekly during the remainder of the year and conduct focused and comprehensive sweeping before forecasted rain events.
			Remove tire debris and residue routinely and dispose of residue appropriately.
			Speed limit is a maximum of 15 mph at any and all facility locations
Cement plant stockpile storage	Stored materials	TSS, Conductivity, pH, Settleable Matter, Turbidity, Metals	Implement control measures in the Fugitive Dust Control Plan
			Maintain berms to divert runon around material storage areas and convey runoff through pipes and non-erodible features (rock-line drainages)
			Install energy dissipating devices to slow the velocity of storm water drainage and prevent erosion
			Route runoff to sedimentation basins
Truck washing	Wash water	O&G, TSS, Conductivity pH, Settleable Matter, Turbidity, Metals, Visible Oil	Transport all wash water to Reclaim Water System
			Clean area of washwater residue that might contact stormwater before anticipated rain events
Rock crushing	Settling dust, tracking of materials	TSS, Conductivity, pH, Settleable Matter, Turbidity, Metals	Implement control measures in the Fugitive Dust Control Plan.
			Use dry cleanup methods, sweep paved areas of the Facility daily during the storm season (October 1 through May 30) and weekly during the remainder of the year and conduct focused and comprehensive sweeping before forecasted rain events.
Cement processing	Settling dust, tracking of materials	TSS, Conductivity, pH, Settleable Matter, Turbidity, Metals	Implement control measures in the Fugitive Dust Control Plan.
			Use dry cleanup methods, sweep paved areas of the Facility daily during the storm season (October 1 through May 30) and weekly during the remainder of the year and conduct focused and comprehensive sweeping before forecasted rain events.
Wastewater treatment	Potential spills and leaks of wastewater and treatment chemicals	TSS, Conductivity, pH, Settleable Matter, Turbidity	Conduct inspections and maintenance consistent with HMBP and Water Reclamation Requirements adopted by the RWQCB (Order No. 94-038).

Figures

LEGEND

Property Boundary

NOTES

REFERENCE

SERVICE LAYER CREDITS: SOURCES: ESRI, HERE, DELORME, TOMTOM, INTERMAP, INCREMENT P CORP., GEBCO, USGS, FAO, NPS, NRCAN, GEOBASE, IGN, KADASTER NL, ORDNANCE SURVEY, ESRI JAPAN, METI, ESRI CHINA (HONG KONG), SWISSTOPO, MAPMYINDIA, © OPENSTREETMAP CONTRIBUTORS, AND THE GIS USER COMMUNITY

CLIENT
LEHIGH SOUTHWEST CEMENT CO. PERMANENTE
SANTA CLARA COUNTY, CA

PROJECT
STORMWATER POLLUTION PREVENTION PLAN

TITLE
REGIONAL SETTING

YYYY-MM-DD	2014-07-22
PREPARED	DZF
DESIGN	DZF
REVIEW	GW
APPROVED	TB

PROJECT No.	CONTROL	Rev.	FIGURE
1238150201		----	1

IF THIS MEASUREMENT DOES NOT MATCH WHAT IS SHOWN, THE SHEET HAS BEEN MODIFIED FROM: ANSI A

Path: \\sunnyvale\Data\GIS\Sites\Lehigh_Permanente_Quarry\Maps\General\SiteLocMap_20140722.mxd

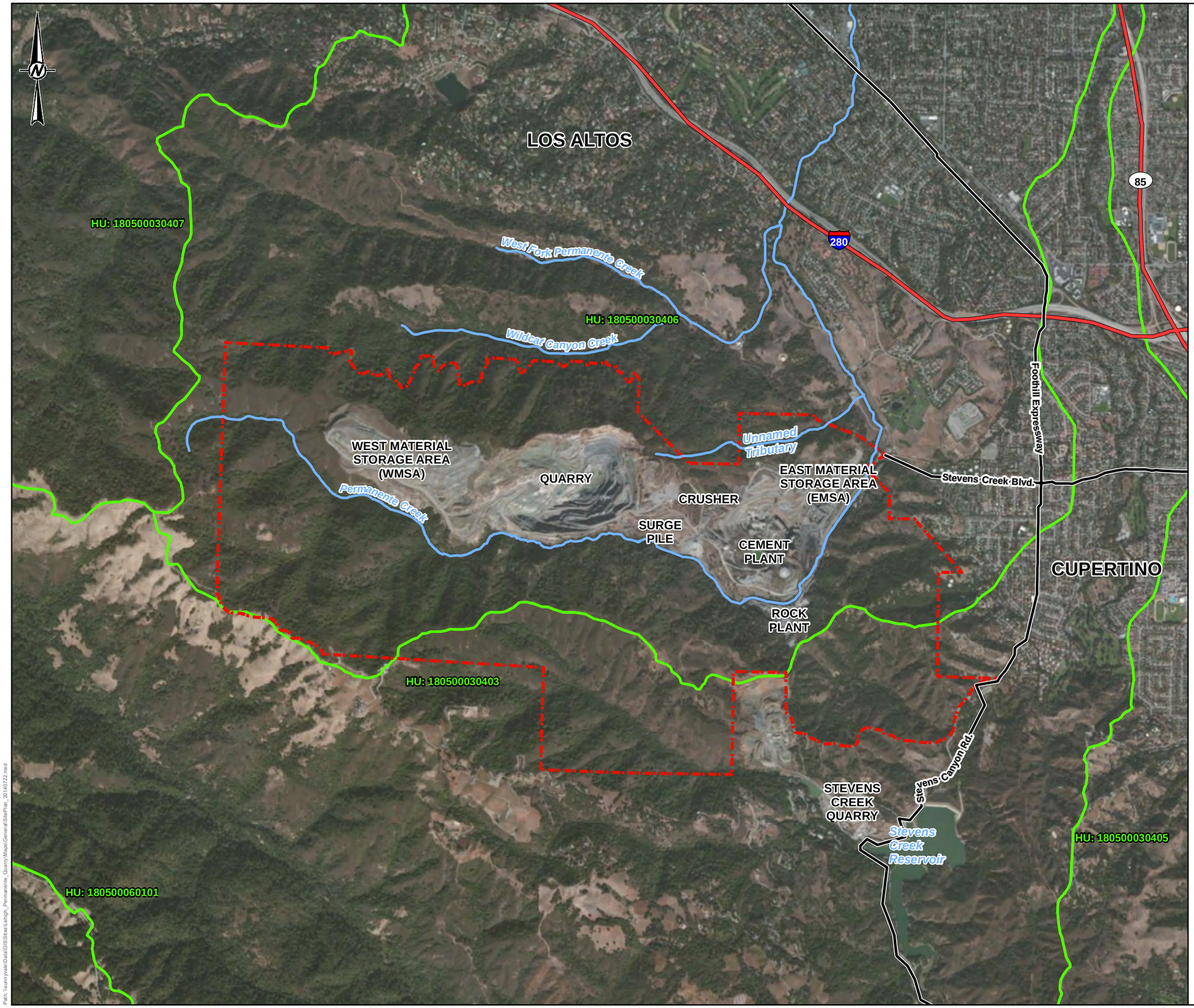

LEGEND

- Stream
- Property Boundary
- Watershed Boundary and Hydrologic Unit

NOTES

1) LOCATIONS BASED ON CONVERSION FROM LOCAL COORDINATES OR GOOGLE EARTH PLACEMENTS

REFERENCE

1) SERVICE LAYER CREDITS: SOURCE: ESRI, DIGITALGLOBE, GEOEYE, I-CUBED, EARTHSTAR GEOGRAPHICS, CNES/AIRBUS DS, USDA, USGS, AEX, GETMAPPING, AEROGRID, IGN, IGP, SWISSTOPO, AND THE GIS USER COMMUNITY
2) COORDINATE SYSTEM: NAD 1983 STATEPLANE CALIFORNIA III FIPS 0403 FEET
3) HYDROLOGIC UNITS: WATERSHED BOUNDARY DATASET (WBD), 2014. USGS AND USDA-NRCS.

CLIENT
LEHIGH SOUTHWEST CEMENT CO. PERMANENTE
SANTA CLARA COUNTY, CA

PROJECT
STORMWATER POLLUTION PREVENTION PLAN

TITLE
SITE VICINITY

YYYY-MM-DD	2014-07-22
PREPARED	DZF
DESIGN	DZF
REVIEW	GW
APPROVED	TB

PROJECT No.	CONTROL	Rev.	FIGURE
1238150201		-----	2

IF THIS MEASUREMENT DOES NOT MATCH WHAT IS SHOWN, THE SHEET HAS BEEN MODIFIED FROM: ANSI B

Path: \\sunnyvale\Data\GIS\Sites\Lehigh_Permanente_Quarry\Maps\General\SitePlan_20140722.mxd

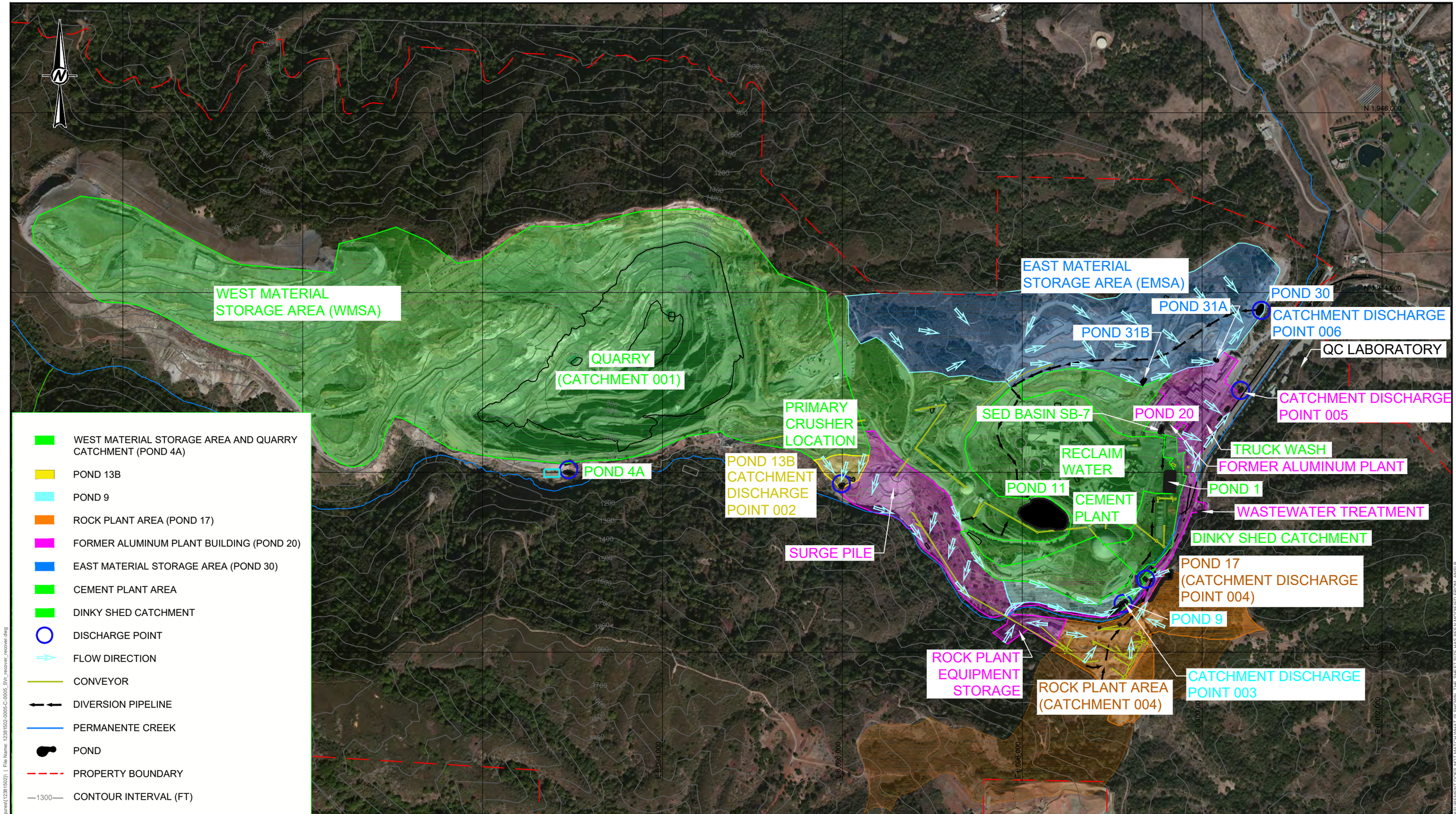

- WEST MATERIAL STORAGE AREA AND QUARRY CATCHMENT (POND 4A)
- POND 13B
- POND 9
- ROCK PLANT AREA (POND 17)
- FORMER ALUMINUM PLANT BUILDING (POND 20)
- EAST MATERIAL STORAGE AREA (POND 30)
- CEMENT PLANT AREA
- DINKY SHED CATCHMENT
- DISCHARGE POINT
- FLOW DIRECTION
- CONVEYOR
- DIVERSION PIPELINE
- PERMANENTE CREEK
- POND
- PROPERTY BOUNDARY
- —1300— CONTOUR INTERVAL (FT)

NOTES:
QUARRY, CEMENT PLANT, AND ROCK PLANT AREAS ARE INCLUDED FOR REFERENCE

REFERENCES:
SPATIAL REFERENCE: NAD 1983 STATEPLANE CALIFORNIA III FIPS 0403 FEET

TOPOGRAPHY SHOWN IS BASED ON AERIAL SURVEY PERFORMED JUNE 2013, PROVIDED BY ALPHA SURVEYING

BASE MAPS:
Sources: Esri, DeLorme, HERE, TomTom, Intermap, increment P Corp., GEBCO, USGS, FAO, NPS, NRCAN, GeoBase, IGN, Kadaster NL, Ordnance Survey, Esri Japan, METI, Esri China (Hong Kong), swisstopo, and the GIS User Community
Source: Esri, DigitalGlobe, GeoEye, i-cubed, USDA, USGS, AEX, Getmapping, Aerogrid, IGN, IGP, swisstopo, and the GIS User Community

0 500 1000
SCALE FEET

CLIENT
LEHIGH SOUTHWEST CEMENT CO. PERMANENTE
SANTA CLARA COUNTY, CA

PROJECT
STORMWATER POLLUTION PREVENTION PLAN

CONSULTANT
GOLDER

YYYY-MM-DD	2018-10-15
PREPARED	KMM
DESIGN	GW
REVIEW	MN
APPROVED	GW

TITLE
SITE MAP OVERVIEW

PROJECT No.	CONTROL	Rev.	FIGURE
12381502		----	3

IF THIS MEASUREMENT DOES NOT MATCH WHAT IS SHOWN, THE SHEET SIZE HAS BEEN MODIFIED FROM: ANSI B
1 in
0
Path: \\sunnyvale\acad\Sites\Hansen Lehigh\SWPPP Figures\(12381502)\ | File Name: 12381502-0005-C-0005_SV_recover_recover.dwg

CLIENT
LEHIGH SOUTHWEST CEMENT CO. PERMANENTE
SANTA CLARA COUNTY, CA

PROJECT
STORMWATER POLLUTION PREVENTION PLAN

CONSULTANT

GOLDER

YYYY-MM-DD	2018-10-15
PREPARED	KMM
DESIGN	GW
REVIEW	MN
APPROVED	GW

TITLE
CATCHMENT DISCHARGE POINT 002

PROJECT No.	CONTROL	Rev.	FIGURE
12381502		----	4

Path: \\sunnyvale\acad\Sites\Hansen Lehigh\SWPPP Figures\{12381502}\ | File Name: 12381502-0005-C-0005_SW_recover_recover.dwg
IF THIS MEASUREMENT DOES NOT MATCH WHAT IS SHOWN, THE SHEET SIZE HAS BEEN MODIFIED FROM: ANSI B
1 in
0

0 300 600
SCALE FEET

CLIENT
LEHIGH SOUTHWEST CEMENT CO. PERMANENTE
SANTA CLARA COUNTY, CA

PROJECT
STORMWATER POLLUTION PREVENTION PLAN

CONSULTANT
GOLDER

YYYY-MM-DD	2018-10-15
PREPARED	KMM
DESIGN	GW
REVIEW	MN
APPROVED	GW

TITLE
CATCHMENT DISCHARGE POINT 003

PROJECT No.	CONTROL	Rev.	FIGURE
12381502		----	5

Path: \\sunnyvale\acad\Sites\Hansen Lehigh\SWPPP Figures\(12381502)\ | File Name: 12381502-0005-C-0005_SV_recover_recover.dwg
IF THIS MEASUREMENT DOES NOT MATCH WHAT IS SHOWN, THE SHEET SIZE HAS BEEN MODIFIED FROM: ANSI B
1 in
0

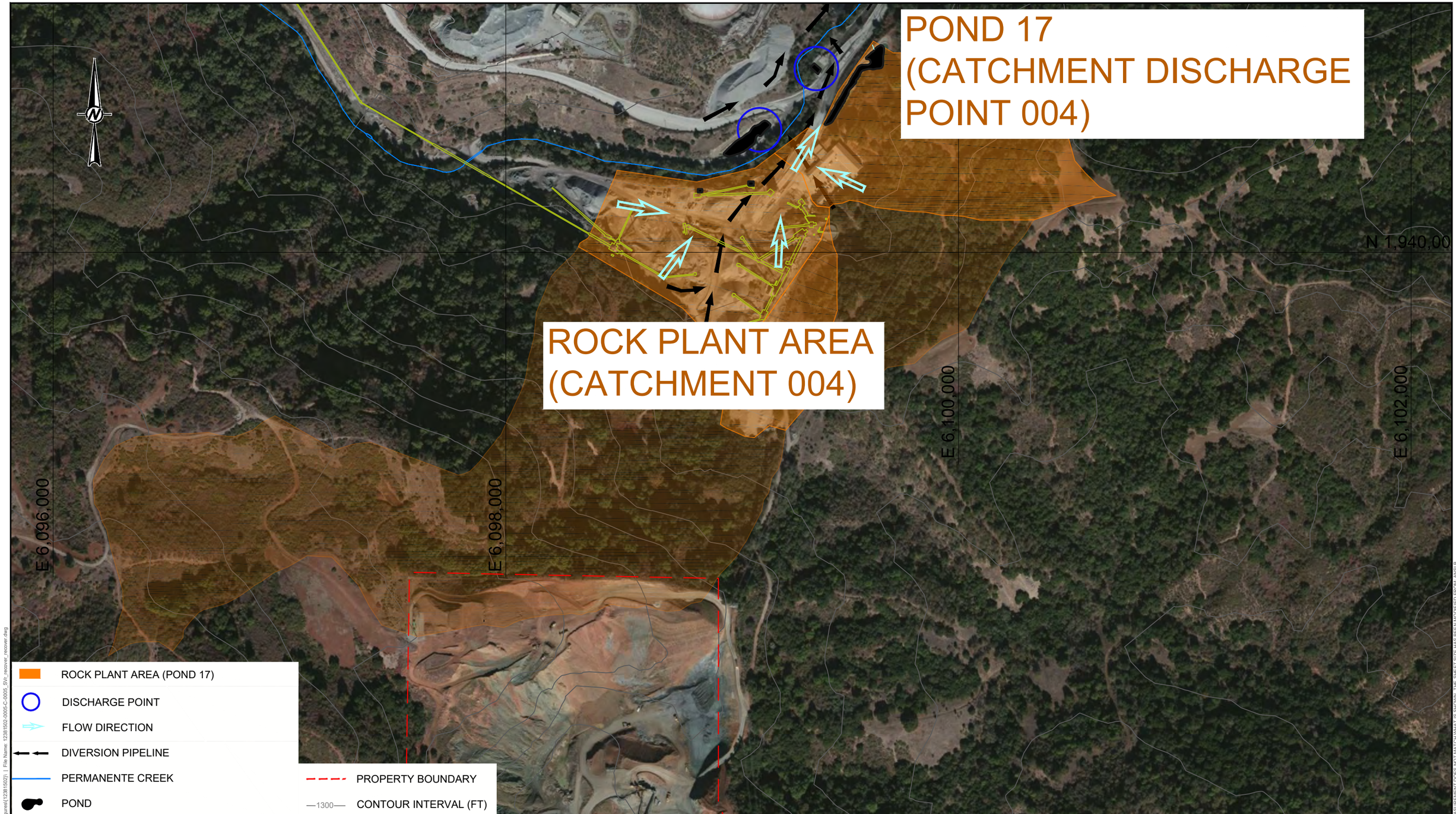

NOTES:

*NO DISCHARGE TO PERMANENTE CREEK;

EXCESS WATER IS PUMPED TO RECLAIM WATER SYSTEM

0 200 400
SCALE FEET

CLIENT
LEHIGH SOUTHWEST CEMENT CO. PERMANENTE
SANTA CLARA COUNTY, CA

PROJECT
STORMWATER POLLUTION PREVENTION PLAN

CONSULTANT

GOLDER

YYYY-MM-DD	2018-10-15
PREPARED	KMM
DESIGN	GW
REVIEW	MN
APPROVED	GW

TITLE
CATCHMENT DISCHARGE POINT 004

PROJECT No.	CONTROL	Rev.	FIGURE
12381502		----	6

Path: \\sunnyvale\acad\Sites\Hansen Lehigh\SWPPP Figures\{12381502\} | File Name: 12381502-0005-C-0005_SW_recover_recover.dwg

IF THIS MEASUREMENT DOES NOT MATCH WHAT IS SHOWN, THE SHEET SIZE HAS BEEN MODIFIED FROM: ANSI B

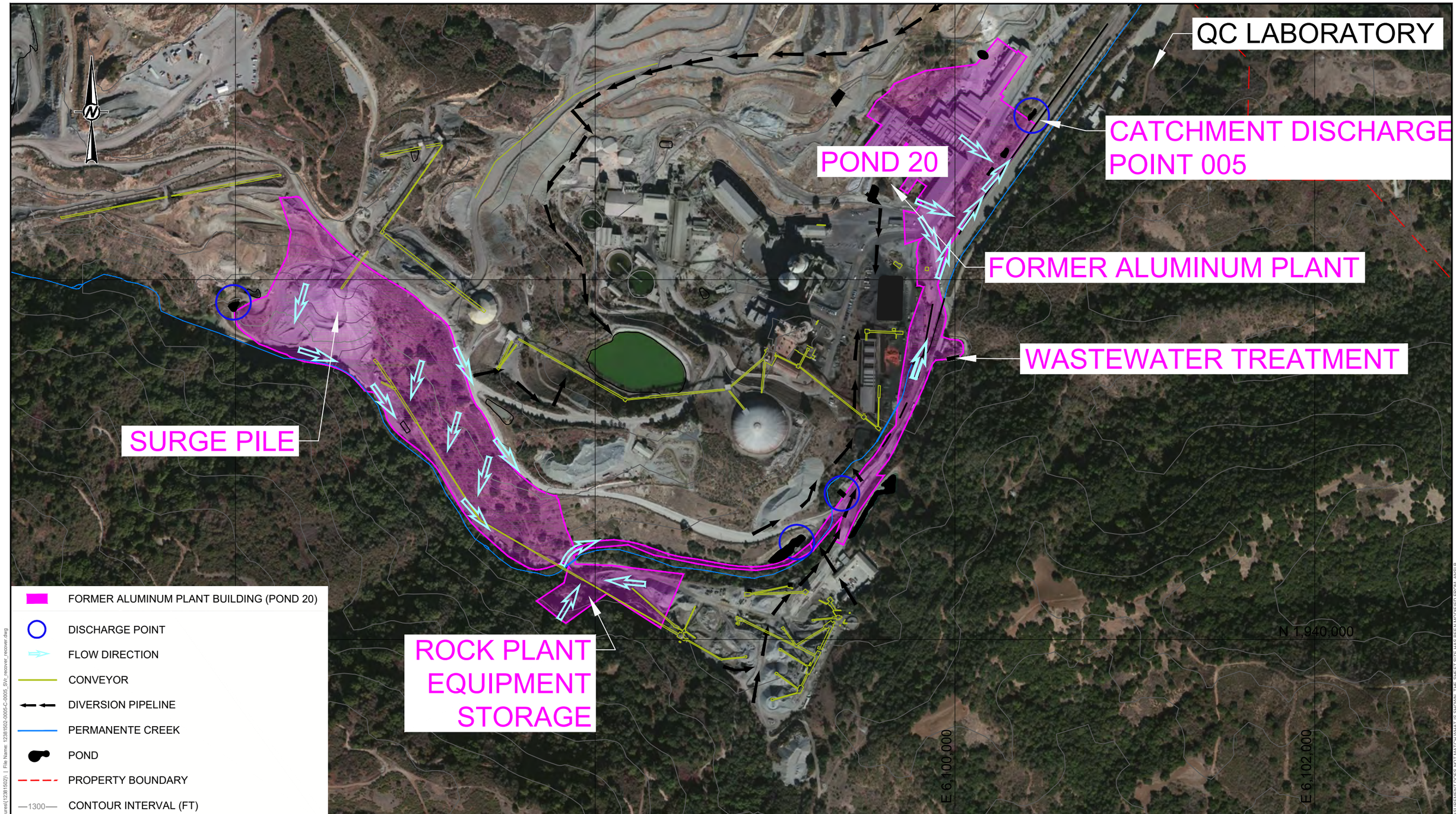

CLIENT
LEHIGH SOUTHWEST CEMENT CO. PERMANENTE
SANTA CLARA COUNTY, CA

PROJECT
STORMWATER POLLUTION PREVENTION PLAN

CONSULTANT
GOLDER

YYYY-MM-DD	2018-10-15
PREPARED	KMM
DESIGN	GW
REVIEW	MN
APPROVED	GW

TITLE
CATCHMENT DISCHARGE POINT 005

PROJECT No.	CONTROL	Rev.	FIGURE
12381502		----	7

Path: \\sunnyvale\acad\Sites\Hansen Lehigh\SWPPP Figures\(12381502\) | File Name: 12381502-0005-C-0005_SW_recover_recover.dwg
IF THIS MEASUREMENT DOES NOT MATCH WHAT IS SHOWN, THE SHEET SIZE HAS BEEN MODIFIED FROM: ANSI B

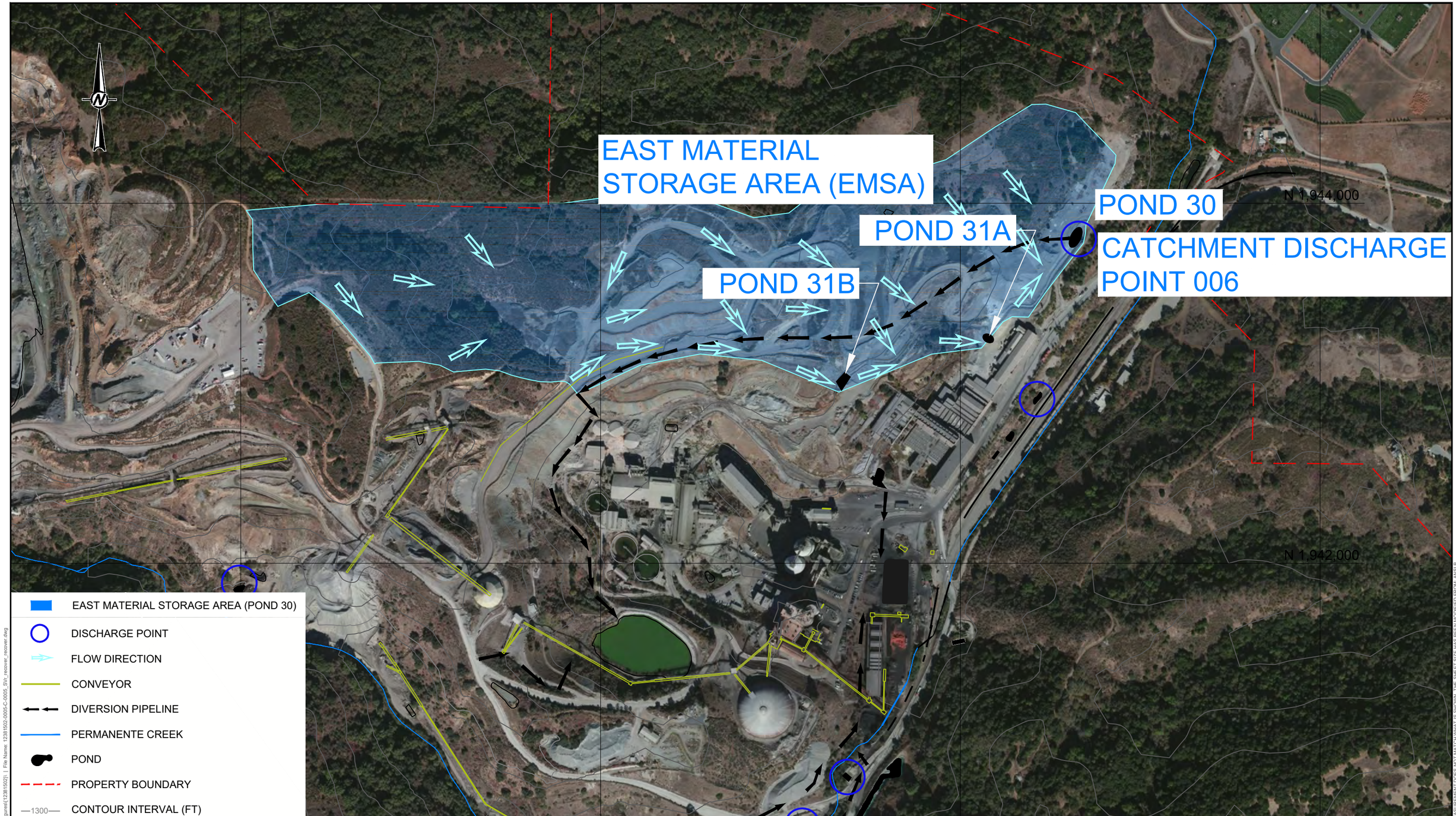

0 250 500
SCALE FEET

CLIENT
LEHIGH SOUTHWEST CEMENT CO. PERMANENTE
SANTA CLARA COUNTY, CA

PROJECT
STORMWATER POLLUTION PREVENTION PLAN

CONSULTANT
GOLDER

YYYY-MM-DD	2018-10-15
PREPARED	KMM
DESIGN	GW
REVIEW	MN
APPROVED	GW

TITLE
CATCHMENT DISCHARGE POINT 006

PROJECT No.	CONTROL	Rev.	FIGURE
12381502		----	8

Path: \\sunnyvale\acad\Sites\Hansen_Lehigh\SWPPP Figures\12381502\ | File Name: 12381502-0005-C-0005_SV- recover_recover.dwg

IF THIS MEASUREMENT DOES NOT MATCH WHAT IS SHOWN, THE SHEET SIZE HAS BEEN MODIFIED FROM: ANSI B

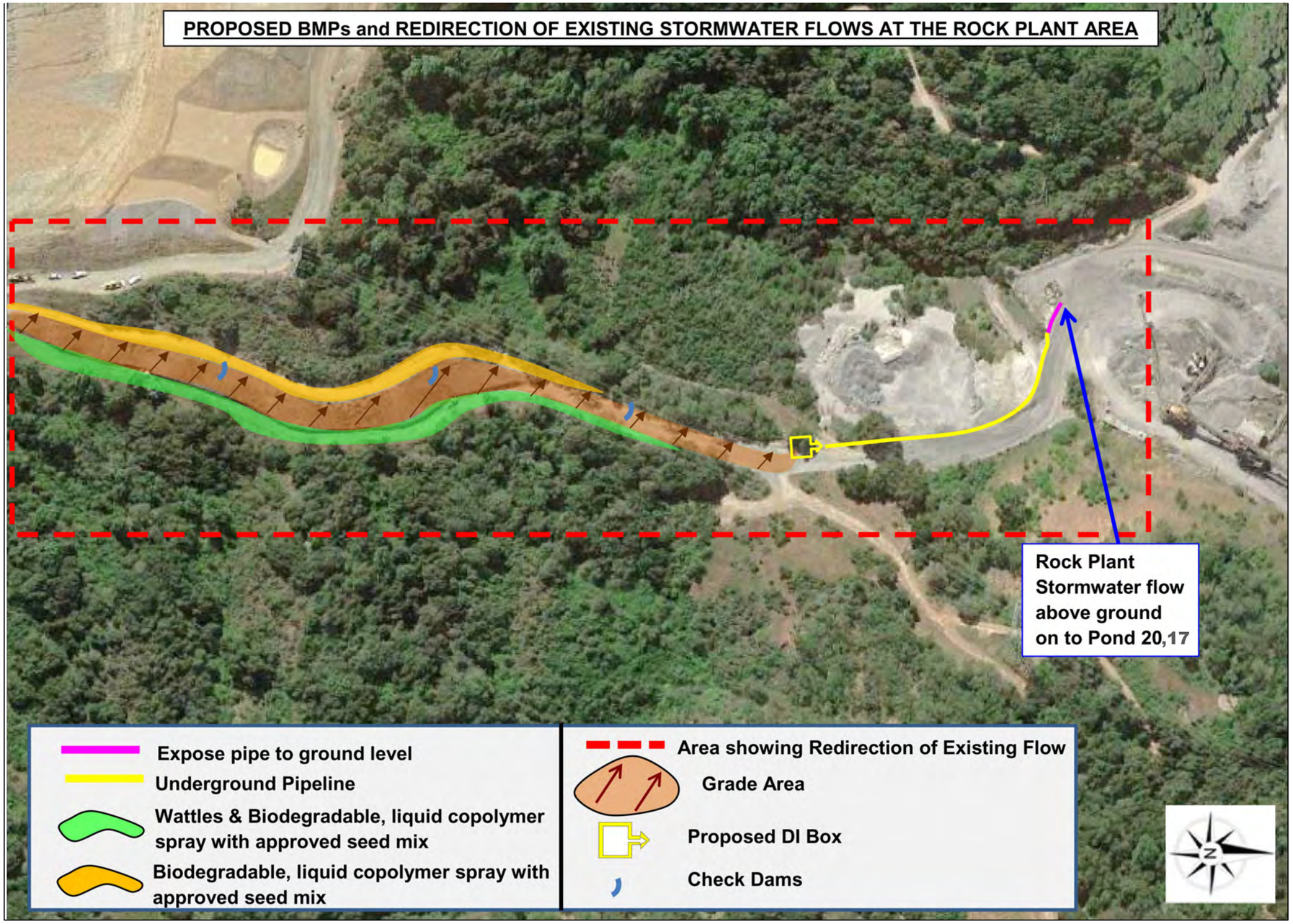

CLIENT
LEHIGH SOUTHWEST CEMENT CO. PERMANENTE
SANTA CLARA COUNTY, CA

PROJECT
STORMWATER POLLUTION PREVENTION PLAN

CONSULTANT
GOLDER

YYYY-MM-DD	2018-10-15
PREPARED	KMM
DESIGN	GW
REVIEW	MN
APPROVED	GW

TITLE
ROCK PLANT HAUL ROAD

PROJECT No.	CONTROL	Rev.	FIGURE
12381502		----	9

Path: \\sunnyvale\acad\Steel-Hansen Lehigh\SWPPP Figures\(12381502) | File Name: 12381502-0005-C-0005_SV_recover_recover.dwg
IF THIS MEASUREMENT DOES NOT MATCH WHAT IS SHOWN, THE SHEET SIZE HAS BEEN MODIFIED FROM: ANSI B

APPENDIX A

BMP Inspection Form

BMP Inspection and Preventative Maintenance Log
Lehigh Permanente Plant

Inspection Date: _____ **Inspector:** _____

Activity/ Area	Recommended BMPs	Inspected/ BMPs Implemented?		If No BMP Implemented, or if Maintenance Needed, List Needed Follow-up Actions	Date Follow-up Completed	
		Yes	No		Date	By
Waste material storage	Implement control measures in the Fugitive Dust Control Plan					
	Maintain all drainage and erosion control systems and all-weather working surfaces at the site					
	Phase placement operations to ensure that non-limestone materials are placed on top of limestone waste materials when feasible					
	Temporarily stabilize active, disturbed reclamation areas undergoing reclamation fill placement before and during rain events expected to produce runoff. Stabilization methods include combined BMPs that protect materials from rain, manage runoff, and reduce erosion. Do not perform reclamation activities involving grading, hauling, and placement of backfill materials during wet weather					
	Cover active haul roads with non-limestone materials where exposed limestone surfaces are present when safe and necessary					
	Stabilize inactive areas, such as temporary stockpiles or inactive excavations using an appropriate combination of BMPs to cover the exposed rock material, intercept runoff, reduce its flow velocity, release runoff as sheet flow, and provide a sediment control mechanism (such as silt fencing, fiber rolls, or hydroseeded vegetation). Standard soil stabilization BMPs include sedimentation basins, geotextiles, mats, erosion control blankets, vegetation, silt fence surrounding the stockpile perimeter, and fiber rolls at the base and on side slopes.					
	Divert all runoff generated from disturbed active and inactive reclamation areas to temporary basins or temporary vegetated infiltration basins. Divert drainage from non-limestone materials directly to sediment control facilities.					
	Install up-gradient berms where limestone fines or stockpiles are placed, to protect against stormwater run-on, and install ditches and down-gradient berms to promote infiltration rather than run-off.					
	Replace the limestone rock and materials that are currently used in the existing BMP ditches and cover or otherwise separate runoff from limestone rock in the existing sediment pond embankments where feasible. Reconstruct or reline to extent practicable existing stormwater conveyances and check dam structures that are constructed or lined with limestone rock using non-limestone material (e.g. greenstone, breccias, greywacke, metabasalt).					
	Cover to extent practicable large limestone surfaces that would remain exposed during the rainy season with interim covers composed of non-limestone rock types					

BMP Inspection and Preventative Maintenance Log
Lehigh Permanente Plant

Activity/ Area	Recommended BMPs	Inspected/ BMPs Implemented?		If No BMP Implemented, or if Maintenance Needed, List Needed Follow-up Actions	Date Follow-up Completed	
		Yes	No		Date	By
All Operations (Discharge Point Nos. 002 through 006)	Place drip pans with absorbent pads under equipment stored or parked for a week or longer.					
	Remove or store under cover abandoned or broken equipment or materials no longer considered for future use that have the potential to expose stormwater to pollutants.					
	Inspect trucks and other heavy equipment for evidence of leaks and promptly (as soon as reasonably possible and in no case later than in advance of forecasted rainfall events) cleanup spills, drips, or leaks.					
	Conduct inspections and maintenance consistent with HMBP					
	Use dry cleanup methods, apply absorbent pads to leaks or spills, then properly dispose. Use absorbent pads and not granular absorbents outdoors.					
	Train employees on proper cleanup and spill response annually and within 30 days for new hires.					
	Replace split, torn, unraveling, or slumping fiber rolls. Remove sediment accumulation when the sediment accumulation reaches 1/3 of the designated storage depth.					
	Inspect the following for debris, waste, spills, tracked materials, leaked materials, and deposited sediment: Stormwater discharge locations Drainage areas Conveyance systems (clean before October 1 and as needed) Material handling areas Perimeter areas impacted by off-facility materials or stormwater run-on					
	Non-stormwater discharges are discharged to the RWS.					
	Identify equipment and systems used outdoors that may spill or leak potential stormwater pollutants. Observe the identified equipment and systems to detect leaks, or identify conditions that may result in the development of leaks. Check for the following: Deterioration of equipment, containers, and metal accessories that are stored outside Corrosion, structural failure, spills, leaks, etc.					
	Cover stored industrial materials that can be readily mobilized by contact with storm water					

BMP Inspection and Preventative Maintenance Log
Lehigh Permanente Plant

Activity/ Area	Recommended BMPs	Inspected/ BMPs Implemented?		If No BMP Implemented, or if Maintenance Needed, List Needed Follow-up Actions	Date Follow-up Completed	
		Yes	No		Date	By
Equipment repair and maintenance Parking and maintenance of trucks	Minimize equipment service outside of maintenance area during wet weather					
	Use dry cleanup sweep paved areas three times weekly during the storm season (October 1 through May 30) and weekly during the remainder of the year. Use vacuum sweeper and sweep inaccessible areas by hand or using a vacuum. Conduct focused and comprehensive sweeping before forecasted rain events.					
	Implement proper spill prevention control measures.					
	Train employees on proper spill cleanup and response					
	Prohibit hosing off driveways, parking lots, and other paved areas unless contained and disposed to sanitary sewer					
	Apply absorbent pads to leaks or spills, then properly dispose. Properly maintain all vehicles to prevent leakage					
	In the event that vehicle or movable equipment maintenance or repairs are performed in uncovered areas, Inspect the area where the maintenance or repair occurred and cleanup waste products, including pollutant-containing fluids deposited or spilled on the ground as results of the maintenance or repair.					
Truck traffic	Implement control measures in the Fugitive Dust Control Plan					
	Use dry cleanup methods, sweep paved areas of the Facility daily during the storm season (October 1 through May 30) and weekly during the remainder of the year and conduct focused and comprehensive sweeping before forecasted rain events.					
	Remove tire debris and residue routinely and dispose of residue appropriately.					
	Speed limit is a maximum of 15 mph at any and all facility locations					
Truck Fueling	Use spill and overflow protection					
	Minimize run-on of stormwater into fueling area					
	Use dry cleanup methods. Use absorbent pads and not granular absorbents outdoors.					
	Implement proper spill prevention controls					
	Train employees on proper spill cleanup and response					
Cement plant stockpile storage	Implement control measures in the Fugitive Dust Control Plan					
	Maintain berms to divert run-on around material storage areas and convey runoff through pipes and non-erodible features (rock-line drainages)					
	Install energy dissipating devices to slow the velocity of storm water drainage and prevent erosion					
	Route runoff to sedimentation basins					
Truck washing	Transport all wash water to Reclaim Water System					
	Clean area of washwater residue that might contact stormwater before anticipated rain events					

BMP Inspection and Preventative Maintenance Log
Lehigh Permanente Plant

Activity/ Area	Recommended BMPs	Inspected/ BMPs Implemented?		If No BMP Implemented, or if Maintenance Needed, List Needed Follow-up Actions	Date Follow-up Completed	
		Yes	No		Date	By
Rock crushing	Implement control measures in the Fugitive Dust Control Plan.					
	Use dry cleanup methods, sweep paved areas of the Facility daily during the storm season (October 1 through May 30) and weekly during the remainder of the year and conduct focused and comprehensive sweeping before forecasted rain events.					
Cement processing	Implement control measures in the Fugitive Dust Control Plan.					
	Use dry cleanup methods, sweep paved areas of the Facility daily during the storm season (October 1 through May 30) and weekly during the remainder of the year and conduct focused and comprehensive sweeping before forecasted rain events.					
Wastewater treatment	Conduct inspections and maintenance consistent with HMBP and Water Reclamation Requirements adopted by the RWQCB (Order No. 94-038).					

APPENDIX B

Employee Training Log

Employee Training Record

Describe the annual training of employees on the SWPPP, addressing spill response, good housekeeping, and material management practices

FACILITY_____

Date	Attendees	Trainer/Title	Training Materials	PPT		All Employees				
				SWPPP Implementation	Monitoring Procedures	Spill Prevention and Response	Good Housekeeping	Preventive Maintenance	BMP Maintenance	Record Keeping

APPENDIX C

California Stormwater Quality Association (CASQA) BMP Handbook Fact Sheets

Section 3
Erosion and Sediment Control BMPs

3.1 Erosion Control

Erosion control is any source control practice that protects the soil surface and prevents soil particles from being detached by rainfall, flowing water, or wind. Erosion control consists of using project scheduling and planning to reduce soil or vegetation disturbance (particularly during the rainy season), preventing or reducing erosion potential by diverting or controlling drainage, as well as preparing and stabilizing disturbed soil areas. Erosion control BMPs that can be used to fulfill these objectives are shown in Table 3-1. It should be noted that several additional BMPs, such as Check Dams (SE-4) and Fiber Rolls (SE-5) can be used for erosion control, by reducing slope length or steepness, as well as for sediment control (i.e., perimeter control or retention of sediment). These BMPs have been included in this handbook as sediment control BMPs and are shown in Table 3-2.

Table 3-1 Erosion Control BMPs

BMP#	BMP Name
EC-1	Scheduling
EC-2	Preservation of Existing Vegetation
EC-3	Hydraulic Mulch[1]
EC-4	Hydroseeding[1]
EC-5	Soil Binders[1]
EC-6	Straw Mulch[1]
EC-7	Geotextiles & Mats[1]
EC-8	Wood Mulching
EC-9	Earth Dikes and Drainage Swales
EC-10	Velocity Dissipation Devices
EC-11	Slope Drains
EC-12	Streambank Stabilization
EC-13	Reserved[2]
EC-14	Compost Blankets[3]
EC-15	Soil Preparation / Roughening[3]
EC-16	Non-Vegetative Stabilization[3]

1) BMP fact sheet updated in 2009
2) BMP fact sheet removed in 2009 (formerly PAM)
3) New BMP fact sheet added in 2009

All inactive soil disturbed areas on the project site, and most active areas prior to the onset of rain, must be protected from erosion. Soil disturbed areas may include relatively flat areas as well as slopes. Typically, steep slopes and large exposed areas require the most robust erosion controls; flatter slopes and smaller areas still require protection, but less costly materials may be appropriate for these areas, allowing savings to be directed to the more robust BMPs for steep slopes and large exposed areas. Additional guidance on the selection of temporary slope stabilization methods is provided in Appendix F. To be effective, erosion control BMPs for slopes at disturbed areas must be protected from concentrated flows.

Some erosion control BMPs can be used effectively to temporarily prevent erosion by concentrated flows. These BMPs, used alone or in combination, prevent erosion by intercepting, diverting, conveying, and discharging concentrated flows in a manner that prevents soil detachment and transport. Temporary concentrated flow conveyance controls may be required to direct run-on around or through the project in a non-erodible fashion. Temporary concentrated flow conveyance controls include the following BMPs:

- EC-9, Earth Dikes and Drainage Swales
- EC-10, Velocity Dissipation Devices
- EC-11, Slope Drains

3.2 Sediment Control

Sediment control is any practice that traps soil particles after they have been detached and moved by rain, flowing water, or wind. Sediment control measures are usually passive systems that rely on filtering or settling the particles out of the water or wind that is transporting them.

Sediment control practices include the BMPs listed in Table 3-2.

Table 3-2 Temporary Sediment Control BMPs

BMP#	BMP Name
SE-1	Silt Fence[1]
SE-2	Sediment Basin[1]
SE-3	Sediment Trap
SE-4	Check Dam[1]
SE-5	Fiber Rolls[1]
SE-6	Gravel Bag Berm[1]
SE-7	Street Sweeping and Vacuuming
SE-8	Sandbag Barrier[1]
SE-9	Straw Bale Barrier
SE-10	Storm Drain Inlet Protection[1]
SE-11	Active Treatment Systems[1]
SE-12	Temporary Silt Dike[2]
SE-13	Compost Socks and Berms[2]
SE-14	Biofilter Bags[2]

1) BMP fact sheet updated in 2009
2) New BMP fact sheet added in 2009

Sediment control BMPs include those practices that intercept and slow or detain the flow of stormwater to allow sediment to settle and be trapped. Sediment control practices can consist of installing linear sediment barriers (such as silt fences, gravel bag berms, or fiber rolls); and constructing check dams, a sediment trap or sediment basin to retain sediment on site. Linear sediment barriers are typically placed below the toe of exposed and erodible slopes, down-slope of exposed soil areas, around soil stockpiles, and at other appropriate locations along the site perimeter. As mentioned in Section 3.1, some BMPs are dual-purpose, such as Fiber Rolls and Check Dams. By reducing effective slope length or steepness, these BMPs reduce erosion as well as promote sedimentation.

Sediment control BMPs are most effective when used in conjunction with erosion control BMPs. The combination of erosion control and sediment control is the most effective means to prevent sediment from leaving the project site and potentially entering storm drains or receiving waters. The General Permit requires that sediment controls be established and maintained at all sites and requires the combined use with erosion controls to protect disturbed areas at most sites.

3.3 Wind Erosion Control

Wind erosion control consists of applying water or other dust palliatives to prevent or minimize dust nuisance. Wind erosion control BMPs are shown in Table 3-3.

Table 3-3 Wind Erosion Control BMPs

BMP#	BMP Name
WE-1	Wind Erosion Control[1]
1) BMP fact Sheet updated in 2009	

Other BMPs that control wind erosion are EC-1 through EC-8, and EC-14 through EC-16, shown in Section 3.1 of this handbook. Be advised that some of the dust palliatives/chemical dust suppression agents may have potential water quality impacts. A sampling and analysis protocol to test for stormwater contamination from exposure to such compounds is required in the SWPPP.

3.4 Tracking Control BMPs

Tracking control consists of preventing or reducing the tracking of sediment off-site by vehicles leaving the construction area. Tracking control BMPs are shown in Table 3-4. Street Sweeping and Vacuuming (SE-7) is also a tracking control practice. All sites must have a stabilized construction entrance and implement controls to prevent off-site tracking of sediment or other loose construction-related materials. These controls should be inspected daily.

Table 3-4 Temporary Tracking Control BMPs

BMP #	BMP Name
TC-1	Stabilized Construction Entrance/ Exit
TC-2	Stabilized Construction Roadway
TC-3	Entrance/Outlet Tire Wash

Attention to control of tracking sediment off site is essential, as dirty streets and roads near a construction site create a nuisance to the public and can generate complaints to elected officials and regulators. These complaints often result in immediate inspections and regulatory actions.

3.5 Erosion and Sediment Control BMP Fact Sheet Format

A BMP fact sheet is a short document that presents detailed information about a particular BMP. Typically each fact sheet contains the information outlined in Figure 3-1. Fact sheets for each of the above activities are provided in Section 3.6.

The fact sheets also contain side bar presentations with information on BMP categories, targeted constituents, removal effectiveness, and potential alternatives.

EC-xx Example Fact Sheet

Description and Purpose
Suitable Applications
Limitations
Implementation
Costs
Inspection and Maintenance
References

Figure 3-1
Example Fact Sheet

3.6 BMP Fact Sheets

BMP fact sheets for erosion, sediment, wind, and tracking controls follow. The BMP fact sheets are individually page numbered and are suitable for inclusion in SWPPPs. Copies of the fact sheets can be individually downloaded from the CASQA BMP Handbook web site at http://www.casqa.org.

Scheduling EC-1

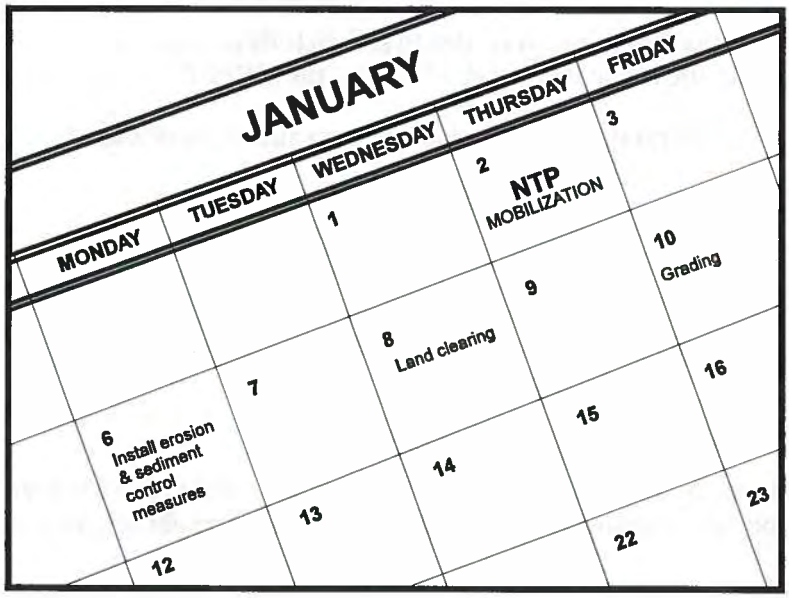

Categories

EC	Erosion Control	☑
SE	Sediment Control	☒
TC	Tracking Control	☒
WE	Wind Erosion Control	☒
NS	Non-Stormwater Management Control	
WM	Waste Management and Materials Pollution Control	

Legend:

☑ **Primary Objective**

☒ **Secondary Objective**

Targeted Constituents

Sediment	☑
Nutrients	
Trash	
Metals	
Bacteria	
Oil and Grease	
Organics	

Potential Alternatives

None

Description and Purpose

Scheduling is the development of a written plan that includes sequencing of construction activities and the implementation of BMPs such as erosion control and sediment control while taking local climate (rainfall, wind, etc.) into consideration. The purpose is to reduce the amount and duration of soil exposed to erosion by wind, rain, runoff, and vehicle tracking, and to perform the construction activities and control practices in accordance with the planned schedule.

Suitable Applications

Proper sequencing of construction activities to reduce erosion potential should be incorporated into the schedule of every construction project especially during rainy season. Use of other, more costly yet less effective, erosion and sediment control BMPs may often be reduced through proper construction sequencing.

Limitations

- Environmental constraints such as nesting season prohibitions reduce the full capabilities of this BMP.

Implementation

- Avoid rainy periods. Schedule major grading operations during dry months when practical. Allow enough time before rainfall begins to stabilize the soil with vegetation or physical means or to install sediment trapping devices.
- Plan the project and develop a schedule showing each phase

of construction. Clearly show how the rainy season relates to soil disturbing and re-stabilization activities. Incorporate the construction schedule into the SWPPP.

- Include on the schedule, details on the rainy season implementation and deployment of:
  - Erosion control BMPs
  - Sediment control BMPs
  - Tracking control BMPs
  - Wind erosion control BMPs
  - Non-stormwater BMPs
  - Waste management and materials pollution control BMPs
- Include dates for activities that may require non-stormwater discharges such as dewatering, sawcutting, grinding, drilling, boring, crushing, blasting, painting, hydro-demolition, mortar mixing, pavement cleaning, etc.
- Work out the sequencing and timetable for the start and completion of each item such as site clearing and grubbing, grading, excavation, paving, foundation pouring utilities installation, etc., to minimize the active construction area during the rainy season.
  - Sequence trenching activities so that most open portions are closed before new trenching begins.
  - Incorporate staged seeding and re-vegetation of graded slopes as work progresses.
  - Schedule establishment of permanent vegetation during appropriate planting time for specified vegetation.
- Non-active areas should be stabilized as soon as practical after the cessation of soil disturbing activities or one day prior to the onset of precipitation.
- Monitor the weather forecast for rainfall.
- When rainfall is predicted, adjust the construction schedule to allow the implementation of soil stabilization and sediment treatment controls on all disturbed areas prior to the onset of rain.
- Be prepared year round to deploy erosion control and sediment control BMPs. Erosion may be caused during dry seasons by un-seasonal rainfall, wind, and vehicle tracking. Keep the site stabilized year round, and retain and maintain rainy season sediment trapping devices in operational condition.
- Apply permanent erosion control to areas deemed substantially complete during the project's defined seeding window.

Costs

Construction scheduling to reduce erosion may increase other construction costs due to reduced economies of scale in performing site grading. The cost effectiveness of scheduling techniques should be compared with the other less effective erosion and sedimentation controls to achieve a cost effective balance.

Inspection and Maintenance

- Verify that work is progressing in accordance with the schedule. If progress deviates, take corrective actions.
- Amend the schedule when changes are warranted.
- Amend the schedule prior to the rainy season to show updated information on the deployment and implementation of construction site BMPs.

References

Stormwater Quality Handbooks Construction Site Best Management Practices (BMPs) Manual, State of California Department of Transportation (Caltrans), November 2000.

Stormwater Management for Construction Activities Developing Pollution Prevention Plans and Best Management Practices (EPA 832-R-92-005), U.S. Environmental Protection Agency, Office of Water, September 1992.

Preservation Of Existing Vegetation EC-2

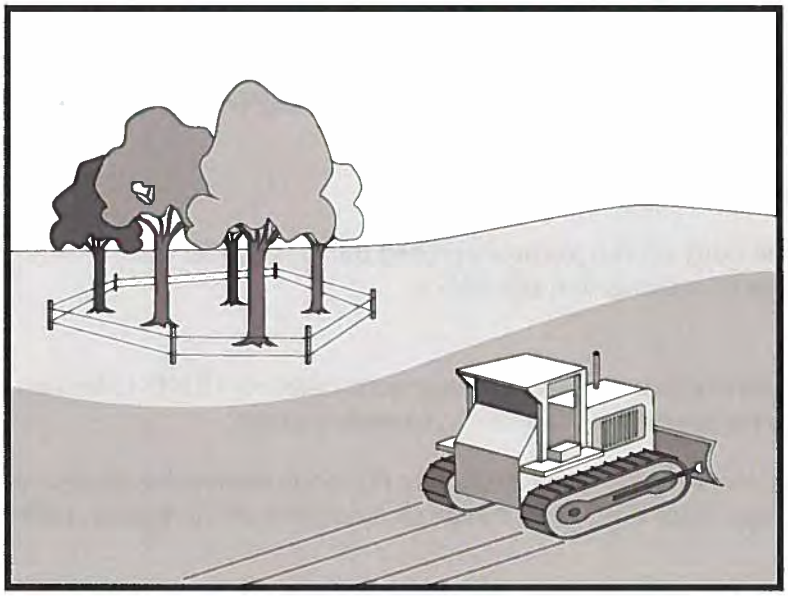

Categories

EC	Erosion Control	☑
SE	Sediment Control	
TC	Tracking Control	
WE	Wind Erosion Control	
NS	Non-Stormwater Management Control	
WM	Waste Management and Materials Pollution Control	

Legend:

☑ **Primary Objective**

☒ **Secondary Objective**

Targeted Constituents

Sediment	☑
Nutrients	
Trash	
Metals	
Bacteria	
Oil and Grease	
Organics	

Potential Alternatives

None

Description and Purpose

Carefully planned preservation of existing vegetation minimizes the potential of removing or injuring existing trees, vines, shrubs, and grasses that protect soil from erosion.

Suitable Applications

Preservation of existing vegetation is suitable for use on most projects. Large project sites often provide the greatest opportunity for use of this BMP. Suitable applications include the following:

- Areas within the site where no construction activity occurs, or occurs at a later date. This BMP is especially suitable to multi year projects where grading can be phased.
- Areas where natural vegetation exists and is designated for preservation. Such areas often include steep slopes, watercourse, and building sites in wooded areas.
- Areas where local, state, and federal government require preservation, such as vernal pools, wetlands, marshes, certain oak trees, etc. These areas are usually designated on the plans, or in the specifications, permits, or environmental documents.
- Where vegetation designated for ultimate removal can be temporarily preserved and be utilized for erosion control and sediment control.

Limitations

- Requires forward planning by the owner/developer,

contractor, and design staff.

- Limited opportunities for use when project plans do not incorporate existing vegetation into the site design.
- For sites with diverse topography, it is often difficult and expensive to save existing trees while grading the site satisfactory for the planned development.

Implementation

The best way to prevent erosion is to not disturb the land. In order to reduce the impacts of new development and redevelopment, projects may be designed to avoid disturbing land in sensitive areas of the site (e.g., natural watercourses, steep slopes), and to incorporate unique or desirable existing vegetation into the site's landscaping plan. Clearly marking and leaving a buffer area around these unique areas during construction will help to preserve these areas as well as take advantage of natural erosion prevention and sediment trapping.

Existing vegetation to be preserved on the site must be protected from mechanical and other injury while the land is being developed. The purpose of protecting existing vegetation is to ensure the survival of desirable vegetation for shade, beautification, and erosion control. Mature vegetation has extensive root systems that help to hold soil in place, thus reducing erosion. In addition, vegetation helps keep soil from drying rapidly and becoming susceptible to erosion. To effectively save existing vegetation, no disturbances of any kind should be allowed within a defined area around the vegetation. For trees, no construction activity should occur within the drip line of the tree.

Timing

- Provide for preservation of existing vegetation prior to the commencement of clearing and grubbing operations or other soil disturbing activities in areas where no construction activity is planned or will occur at a later date.

Design and Layout

- Mark areas to be preserved with temporary fencing. Include sufficient setback to protect roots.
  - Orange colored plastic mesh fencing works well.
  - Use appropriate fence posts and adequate post spacing and depth to completely support the fence in an upright position.
- Locate temporary roadways, stockpiles, and layout areas to avoid stands of trees, shrubs, and grass.
- Consider the impact of grade changes to existing vegetation and the root zone.
- Maintain existing irrigation systems where feasible. Temporary irrigation may be required.
- Instruct employees and subcontractors to honor protective devices. Prohibit heavy equipment, vehicular traffic, or storage of construction materials within the protected area.

Costs

There is little cost associated with preserving existing vegetation if properly planned during the project design, and these costs may be offset by aesthetic benefits that enhance property values. During construction, the cost for preserving existing vegetation will likely be less than the cost of applying erosion and sediment controls to the disturbed area. Replacing vegetation inadvertently destroyed during construction can be extremely expensive, sometimes in excess of $10,000 per tree.

Inspection and Maintenance

During construction, the limits of disturbance should remain clearly marked at all times. Irrigation or maintenance of existing vegetation should be described in the landscaping plan. If damage to protected trees still occurs, maintenance guidelines described below should be followed:

- Verify that protective measures remain in place. Restore damaged protection measures immediately.
- Serious tree injuries shall be attended to by an arborist.
- Damage to the crown, trunk, or root system of a retained tree shall be repaired immediately.
- Trench as far from tree trunks as possible, usually outside of the tree drip line or canopy. Curve trenches around trees to avoid large roots or root concentrations. If roots are encountered, consider tunneling under them. When trenching or tunneling near or under trees to be retained, place tunnels at least 18 in. below the ground surface, and not below the tree center to minimize impact on the roots.
- Do not leave tree roots exposed to air. Cover exposed roots with soil as soon as possible. If soil covering is not practical, protect exposed roots with wet burlap or peat moss until the tunnel or trench is ready for backfill.
- Cleanly remove the ends of damaged roots with a smooth cut.
- Fill trenches and tunnels as soon as possible. Careful filling and tamping will eliminate air spaces in the soil, which can damage roots.
- If bark damage occurs, cut back all loosened bark into the undamaged area, with the cut tapered at the top and bottom and drainage provided at the base of the wood. Limit cutting the undamaged area as much as possible.
- Aerate soil that has been compacted over a trees root zone by punching holes 12 in. deep with an iron bar, and moving the bar back and forth until the soil is loosened. Place holes 18 in. apart throughout the area of compacted soil under the tree crown.
- Fertilization
  - Fertilize stressed or damaged broadleaf trees to aid recovery.
  - Fertilize trees in the late fall or early spring.

- Apply fertilizer to the soil over the feeder roots and in accordance with label instructions, but never closer than 3 ft to the trunk. Increase the fertilized area by one-fourth of the crown area for conifers that have extended root systems.

- Retain protective measures until all other construction activity is complete to avoid damage during site cleanup and stabilization.

References

County of Sacramento Tree Preservation Ordinance, September 1981.

Stormwater Quality Handbooks Construction Site Best Management Practices (BMPs) Manual, State of California Department of Transportation (Caltrans), November 2000.

Stormwater Management of the Puget Sound Basin, Technical Manual, Publication #91-75, Washington State Department of Ecology, February 1992.

Water Quality Management Plan for The Lake Tahoe Region, Volume II, Handbook of Management Practices, Tahoe Regional Planning Agency, November 1988.

Hydraulic Mulch EC-3

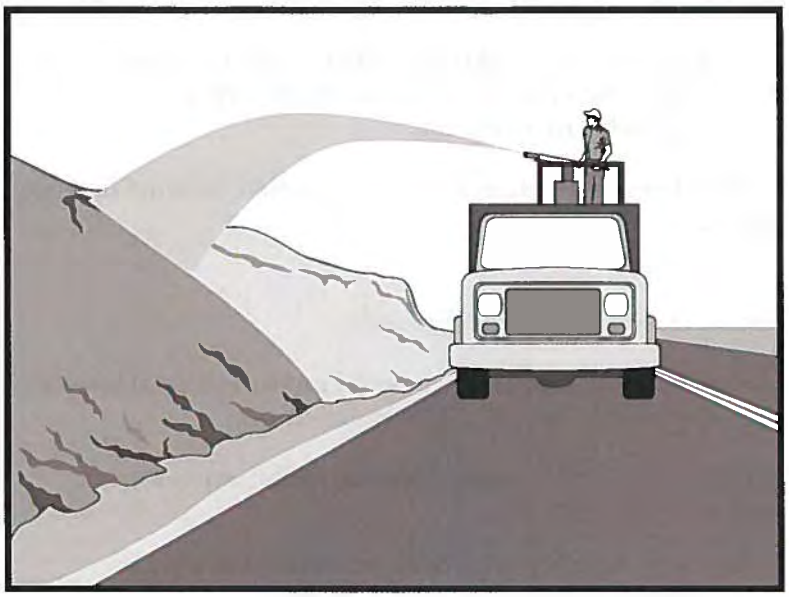

Description and Purpose

Hydraulic Mulch consists of various types of fibrous materials mixed with water and sprayed onto the soil surface in slurry form to provide a layer of temporary protection from wind and water erosion.

Suitable Applications

Hydraulic mulch as a temporary, stand alone, erosion control BMP is suitable for disturbed areas that require temporary protection from wind and water erosion until permanent soil stabilization activities commence. Examples include:

- Rough-graded areas that will remain inactive for longer than permit-required thresholds (e.g., 14 days) or otherwise require stabilization to minimize erosion or prevent sediment discharges.
- Soil stockpiles.
- Slopes with exposed soil between existing vegetation such as trees or shrubs.
- Slopes planted with live, container-grown vegetation or plugs.
- Slopes burned by wildfire.

Hydraulic mulch can also be applied to augment other erosion control BMPs such as:

Categories

EC	Erosion Control	☑
SE	Sediment Control	
TC	Tracking Control	
WE	Wind Erosion Control	☒
NS	Non-Stormwater Management Control	
WM	Waste Management and Materials Pollution Control	

Legend:

☑ **Primary Category**

☒ **Secondary Category**

Targeted Constituents

Sediment	☑
Nutrients	
Trash	
Metals	
Bacteria	
Oil and Grease	
Organics	

Potential Alternatives

EC-4 Hydroseeding

EC-5 Soil Binders

EC-6 Straw Mulch

EC-7 Geotextiles and Mats

EC-8 Wood Mulching

EC-14 Compost Blanket

EC-16 Non-Vegetative Stabilization

CASQA
CALIFORNIA STORMWATER QUALITY ASSOCIATION

- In conjunction with straw mulch (see EC-6 Straw Mulch) where the rate of hydraulic mulch is reduced to 100-500 lbs per acre and the slurry is applied over the straw as a tackifying agent to hold the straw in place.
- Supplemental application of soil amendments, such as fertilizer, lime, gypsum, soil bio-stimulants or compost.

Limitations

In general, hydraulic mulch is not limited by slope length, gradient or soil type. However, the following limitations typically apply:

- Most hydraulic mulch applications, particularly bonded fiber matrices (BFMs), require at least 24 hours to dry before rainfall occurs.
- Temporary applications (i.e., without a vegetative component) may require a second application in order to remain effective for an entire rainy season.
- Treatment areas must be accessible to hydraulic mulching equipment.
- Availability of water sources in remote areas for mixing and application.
- As a stand-alone temporary BMP, hydraulic mulches may need to be re-applied to maintain their erosion control effectiveness, typically after 6-12 months depending on the type of mulch used.
- Availability of hydraulic mulching equipment may be limited just prior to the rainy season and prior to storms due to high demand.
- Cellulose fiber mulches alone may not perform well on steep slopes or in course soils.

Implementation

- Where feasible, it is preferable to prepare soil surfaces prior to application by roughening embankments and fill areas with a crimping or punching type roller or by track walking.
- The majority of hydraulic mulch applications do not necessarily require surface/soil preparation (See EC-15 Soil Preparation) although in almost every case where re-vegetation is included as part of the practice, soil preparation can be beneficial. One of the advantages of hydraulic mulch over other erosion control methods is that it can be applied in areas where soil preparation is precluded by site conditions, such as steep slopes, rocky soils, or inaccessibility.
- Avoid mulch over spray onto roads, sidewalks, drainage channels, existing vegetation, etc.
- Hydraulic mulching is generally performed utilizing specialized machines that have a large water-holding/mixing tank and some form of mechanical agitation or other recirculation method to keep water, mulch and soil amendments in suspension. The mixed hydraulic slurry can be applied from a tower sprayer on top of the machine or by extending a hose to areas remote from the machine.

- Where possible apply hydraulic mulch from multiple directions to adequately cover the soil. Application from a single direction can result in shadowing, uneven coverage and failure of the BMP.
- Hydraulic mulch can also include a vegetative component, such as seed, rhizomes, or stolons (see EC-4 Hydraulic Seed).
- Typical hydraulic mulch application rates range from 2,000 pounds per acre for standard mulches (SMs) to 3,500 pounds per acre for BFMs. However, the required amount of hydraulic mulch to provide adequate coverage of exposed topsoil may appear to exceed the standard rates when the roughness of the soil surface is changed due to soil preparation methods (see EC-15 Soil Preparation) or by slope gradient.
- Other factors such as existing soil moisture and soil texture can have a profound effect on the amount of hydraulic mulch required (i.e. application rate) applied to achieve an erosion-resistant covering.
- Avoid use of mulch without a tackifier component, especially on slopes.
- Mulches used in the hydraulic mulch slurry can include:
  - Cellulose fiber
  - Thermally-processed wood fibers
  - Cotton
  - Synthetics
  - Compost (see EC-14, Compost Blanket)
- Additional guidance on the comparison and selection of temporary slope stabilization methods is provided in Appendix F of the Handbook.

Categories of Hydraulic Mulches

Standard Hydraulic Mulch (SM)

Standard hydraulic mulches are generally applied at a rate of 2,000 pounds per acre and are manufactured containing around 5% tackifier (i.e. soil binder), usually a plant-derived guar or psyllium type. Most standard mulches are green in color derived from food-color based dyes.

Hydraulic Matrices (HM) and Stabilized Fiber Matrices (SFM)

Hydraulic matrices and stabilized fiber matrices are slurries which contain increased levels of tackifiers/soil binders; usually 10% or more by weight. HMs and SFMs have improved performance compared to a standard hydraulic mulch (SM) because of the additional percentage of tackifier and because of their higher application rates, typically 2,500 – 4,000 pounds per acre. Hydraulic matrices can include a mixture of fibers, for example, a 50/50 blend of paper and wood fiber. In the case of an SFM, the tackifier/soil binder is specified as a polyacrylamide (PAM).

Bonded Fiber Matrix (BFM)

Bonded fiber matrices (BFMs) are hydraulically-applied systems of fibers, adhesives (typically guar based) and chemical cross-links. Upon drying, the slurry forms an erosion-resistant blanket that prevents soil erosion and promotes vegetation establishment. The cross-linked adhesive in the BFM should be biodegradable and should not dissolve or disperse upon re-wetting. BFMs are typically applied at rates from 3,000 to 4,000 lbs/acre based on the manufacturer's recommendation. BFMs should not be applied immediately before, during or immediately after rainfall or if the soil is saturated. Depending on the product, BFMs typically require 12 to 24 hours to dry and become effective.

Mechanically-Bonded Fiber Matrices (MBFM)

Mechanically-bonded fiber matrices (MBFMs) are hydraulically applied systems similar to BFM that use crimped synthetic fibers and PAM and are typically applied to a slope at a higher application rate than a standard BFM.

Hydraulic Compost Matrix (HCM)

Hydraulic compost matrix (HCM) is a field-derived practice whereby finely graded or sifted compost is introduced into the hydraulic mulch slurry. A guar-type tackifier can be added for steeper slope applications as well as any specified seed mixtures. A HCM can help to accelerate seed germination and growth. HCMs are particularly useful as an in-fill for three-dimensional re-vegetation geocomposites, such as turf reinforcement mats (TRM) (see EC-7 Geotextiles and Mats).

Costs

Average installed costs for hydraulic mulch categories are is provided in Table 1, below.

Table 1
HYDRAULIC MULCH BMPs
INSTALLED COSTS

BMP	Installed Cost/Acre
Standard Hydraulic Mulching (SM)	$1,700 - $3,600 per acre
Hydraulic Matrices (HM) and Stabilized Fiber Matrices	
Guar-based	$2,000 - $4,000 per acre
PAM-based	$2,500 - $5,610 per acre
Bonded Fiber Matrix (BFM)	$3,900 - $6,900 per acre
Mechanically Bonded Fiber Matrix (MBFM)	$4,500 - $6,000 per acre
Hydraulic Compost Matrix (HCM)	$3,000 - $3,500 per acre

Source: Caltrans Soil Stabilization BMP Research for Erosion and Sediment Controls, July 2007

Inspection and Maintenance

- Maintain an unbroken, temporary mulched ground cover throughout the period of construction when the soils are not being reworked.
- BMPs must be inspected in accordance with General Permit requirements for the associated project type and risk level. It is recommended that at a minimum, BMPs be inspected

weekly, prior to forecasted rain events, daily during extended rain events, and after the conclusion of rain events.

- Areas where erosion is evident should be repaired and BMPs re-applied as soon as possible. Care should be exercised to minimize the damage to protected areas while making repairs, as any area damaged will require re-application of BMPs.
- Compare the number of bags or weight of applied mulch to the area treated to determine actual application rates and compliance with specifications.

References

Soil Stabilization BMP Research for Erosion and Sediment Controls: Cost Survey Technical Memorandum, State of California Department of Transportation (Caltrans), July 2007.

Controlling Erosion of Construction Sites, Agricultural Information #347, U.S. Department of Agriculture (USDA), Natural Resources Conservation Service (NRCS) (formerly Soil Conservation Service – SCS).

Guides for Erosion and Sediment Control in California, USDA Soils Conservation Service, January 1991.

Manual of Standards of Erosion and Sediment Control Measures, Association of Bay Area Governments, May 1995.

Sedimentation and Erosion Control, An Inventory of Current Practices Draft, US EPA, April 1990.

Soil Erosion by Water, Agriculture Information Bulletin #513, U.S. Department of Agriculture, Soil Conservation Service.

Stormwater Quality Handbooks Construction Site Best Management Practices (BMPs) Manual, State of California Department of Transportation (Caltrans), March 2003.

Guidance Document: Soil Stabilization for Temporary Slopes, State of California Department of Transportation (Caltrans), November 1999

Stormwater Management of the Puget Sound Basin, Technical Manual, Publication #91-75, Washington State Department of Ecology, February 1992.

Water Quality Management Plan for the Lake Tahoe Region, Volume II, Handbook of Management Practices, Tahoe Regional Planning Agency, November 1988.

Hydroseeding EC-4

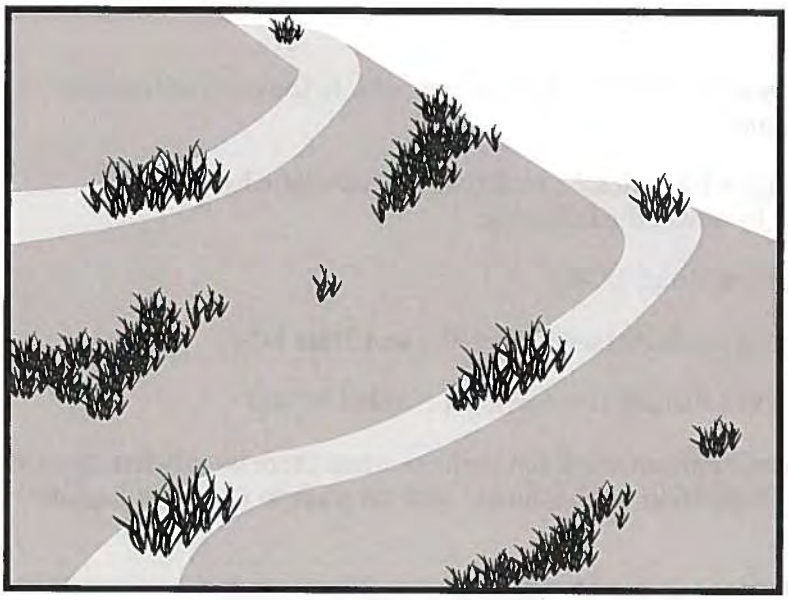

Categories

EC	Erosion Control	☑
SE	Sediment Control	
TC	Tracking Control	
WE	Wind Erosion Control	☒
NS	Non-Stormwater Management Control	
WM	Waste Management and Materials Pollution Control	

Legend:

☑ **Primary Category**

☒ **Secondary Category**

Targeted Constituents

Sediment	☑
Nutrients	
Trash	
Metals	
Bacteria	
Oil and Grease	
Organics	

Potential Alternatives

EC-3 Hydraulic Mulch

EC-5 Soil Binders

EC-6 Straw Mulch

EC-7 Geotextiles and Mats

EC-8 Wood Mulching

EC-14 Compost Blanket

EC-16 Non-Vegetative Stabilization

Description and Purpose

Hydroseeding typically consists of applying a mixture of a hydraulic mulch, seed, fertilizer, and stabilizing emulsion with a hydraulic mulcher, to temporarily protect exposed soils from erosion by water and wind. Hydraulic seeding, or hydroseeding, is simply the method by which temporary or permanent seed is applied to the soil surface.

Suitable Applications

Hydroseeding is suitable for disturbed areas requiring temporary protection until permanent stabilization is established, for disturbed areas that will be re-disturbed following an extended period of inactivity, or to apply permanent stabilization measures. Hydroseeding without mulch or other cover (e.g. EC-7, Erosion Control Blanket) is not a stand-alone erosion control BMP and should be combined with additional measures until vegetation establishment.

Typical applications for hydroseeding include:

- Disturbed soil/graded areas where permanent stabilization or continued earthwork is not anticipated prior to seed germination.
- Cleared and graded areas exposed to seasonal rains or temporary irrigation.
- Areas not subject to heavy wear by construction equipment or high traffic.

CASQA
CALIFORNIA STORMWATER QUALITY ASSOCIATION

Limitations

- Availability of hydroseeding equipment may be limited just prior to the rainy season and prior to storms due to high demand.
- Hydraulic seed should be applied with hydraulic mulch or a stand-alone hydroseed application should be followed by one of the following:
  - Straw mulch (see Straw Mulch EC-6)
  - Rolled erosion control products (see Geotextiles and Mats EC-7)
  - Application of Compost Blanket (see Compost Blanket EC-14)

  Hydraulic seed may be used alone only on small flat surfaces when there is sufficient time in the season to ensure adequate vegetation establishment and coverage to provide adequate erosion control.
- Hydraulic seed without mulch does not provide immediate erosion control.
- Temporary seeding may not be appropriate for steep slopes (i.e., slopes readily prone to rill erosion or without sufficient topsoil).
- Temporary seeding may not be appropriate in dry periods without supplemental irrigation.
- Temporary vegetation may have to be removed before permanent vegetation is applied.
- Temporary vegetation may not be appropriate for short term inactivity (i.e. less than 3-6 months).

Implementation

In order to select appropriate hydraulic seed mixtures, an evaluation of site conditions should be performed with respect to:

- Soil conditions
- Site topography and exposure (sun/wind)
- Season and climate
- Vegetation types
- Maintenance requirements
- Sensitive adjacent areas
- Water availability
- Plans for permanent vegetation

The local office of the U.S.D.A. Natural Resources Conservation Service (NRCS) is an excellent source of information on appropriate seed mixes.

The following steps should be followed for implementation:

- Where appropriate or feasible, soil should be prepared to receive the seed by disking or otherwise scarifying (See EC-15, Soil Preparation) the surface to eliminate crust, improve air and water infiltration and create a more favorable environment for germination and growth.

- Avoid use of hydraulic seed in areas where the BMP would be incompatible with future earthwork activities.
- Hydraulic seed can be applied using a multiple step or one step process.
  - In a multiple step process, hydraulic seed is applied first, followed by mulch or a Rolled Erosion Control Product (RECP).
  - In the one step process, hydraulic seed is applied with hydraulic mulch in a hydraulic matrix. When the one step process is used to apply the mixture of fiber, seed, etc., the seed rate should be increased to compensate for all seeds not having direct contact with the soil.
- All hydraulically seeded areas should have mulch, or alternate erosion control cover to keep seeds in place and to moderate soil moisture and temperature until the seeds germinate and grow.
- All seeds should be in conformance with the California State Seed Law of the Department of Agriculture. Each seed bag should be delivered to the site sealed and clearly marked as to species, purity, percent germination, dealer's guarantee, and dates of test. The container should be labeled to clearly reflect the amount of Pure Live Seed (PLS) contained. All legume seed should be pellet inoculated. Inoculant sources should be species specific and should be applied at a rate of 2 lb of inoculant per 100 lb seed.
- Commercial fertilizer should conform to the requirements of the California Food and Agricultural Code, which can be found at http://www.leginfo.ca.gov/.html/fac_table_of_contents.html. Fertilizer should be pelleted or granular form.
- Follow up applications should be made as needed to cover areas of poor coverage or germination/vegetation establishment and to maintain adequate soil protection.
- Avoid over spray onto roads, sidewalks, drainage channels, existing vegetation, etc.
- Additional guidance on the comparison and selection of temporary slope stabilization methods is provided in Appendix F of the Handbook.

Costs

Average cost for installation and maintenance may vary from as low as $1,900 per acre for flat slopes and stable soils, to $4,000 per acre for moderate to steep slopes and/or erosive soils. Cost of seed mixtures vary based on types of required vegetation.

BMP	Installed Cost per Acre
Hydraulic Seed	$1,900-$4,000

Source: Caltrans Soil Stabilization BMP Research for Erosion and Sediment Controls, July 2007

Inspection and Maintenance

- BMPs must be inspected in accordance with General Permit requirements for the associated project type and risk level. It is recommended that at a minimum, BMPs be inspected weekly, prior to forecasted rain events, daily during extended rain events, and after the conclusion of rain events.
- Areas where erosion is evident should be repaired and BMPs re-applied as soon as possible. Care should be exercised to minimize the damage to protected areas while making repairs, as any area damaged will require re-application of BMPs.
- Where seeds fail to germinate, or they germinate and die, the area must be re-seeded, fertilized, and mulched within the planting season, using not less than half the original application rates.
- Irrigation systems, if applicable, should be inspected daily while in use to identify system malfunctions and line breaks. When line breaks are detected, the system must be shut down immediately and breaks repaired before the system is put back into operation.
- Irrigation systems should be inspected for complete coverage and adjusted as needed to maintain complete coverage.

References

Soil Stabilization BMP Research for Erosion and Sediment Controls: Cost Survey Technical Memorandum, State of California Department of Transportation (Caltrans), July 2007.

Stormwater Quality Handbooks Construction Site Best Management Practices (BMPs) Manual, State of California Department of Transportation (Caltrans), March 2003.

Guidance Document: Soil Stabilization for Temporary Slopes, State of California Department of Transportation (Caltrans), November 1999.

Soil Binders EC-5

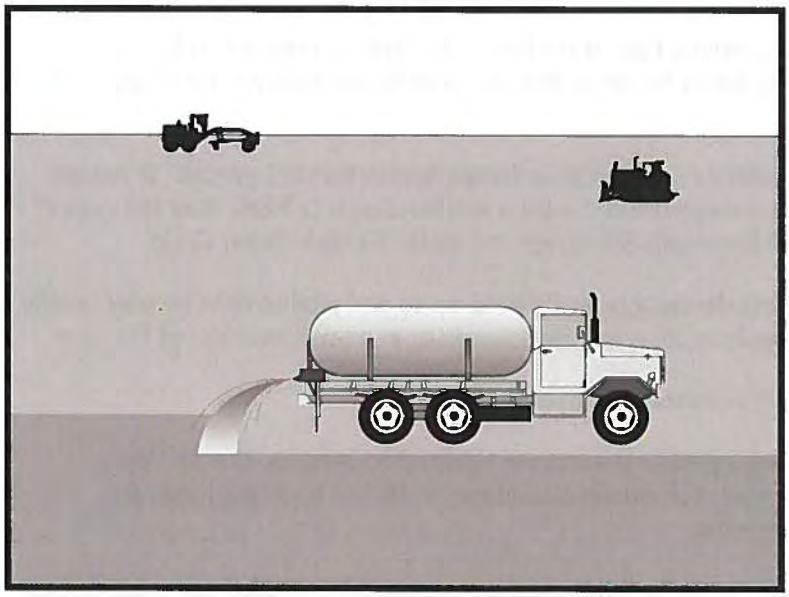

Categories

EC	Erosion Control	☑
SE	Sediment Control	
TC	Tracking Control	
WE	Wind Erosion Control	☒
NS	Non-Stormwater Management Control	
WM	Waste Management and Materials Pollution Control	

Legend:

☑ **Primary Category**

☒ **Secondary Category**

Targeted Constituents

Sediment	☑
Nutrients	
Trash	
Metals	
Bacteria	
Oil and Grease	
Organics	

Potential Alternatives

EC-3 Hydraulic Mulch

EC-4 Hydroseeding

EC-6 Straw Mulch

EC-7 Geotextiles and Mats

EC-8 Wood Mulching

Description and Purpose

Soil binding consists of application and maintenance of a soil stabilizer to exposed soil surfaces. Soil binders are materials applied to the soil surface to temporarily prevent water and wind induced erosion of exposed soils on construction sites.

Suitable Applications

Soil binders are typically applied to disturbed areas requiring temporary protection. Because soil binders, when used as a stand-alone practice, can often be incorporated into the soil, they are a good alternative to mulches in areas where grading activities will soon resume. Soil binders are commonly used in the following areas:

- Rough graded soils that will be inactive for a short period of time
- Soil stockpiles
- Temporary haul roads prior to placement of crushed rock
- Compacted soil road base
- Construction staging, materials storage, and layout areas

Limitations

- Soil binders are temporary in nature and may need reapplication.

- Soil binders require a minimum curing time until fully effective, as prescribed by the manufacturer. Curing time may be 24 hours or longer. Soil binders may need reapplication after a storm event.
- Soil binders will generally experience spot failures during heavy rainfall events. If runoff penetrates the soil at the top of a slope treated with a soil binder, it is likely that the runoff will undercut the stabilized soil layer and discharge at a point further down slope.
- Plant-material-based soil binders do not generally hold up to pedestrian or vehicular traffic across treated areas as well as polymeric emulsion blends or cementitious-based binders.
- Soil binders may not sufficiently penetrate compacted soils.
- Some soil binders are soil texture specific in terms of their effectiveness. For example, polyacrylamides (PAMs) work very well on silt and clayey soils but their performance decreases dramatically in sandy soils.
- Some soil binders may not perform well with low relative humidity. Under rainy conditions, some agents may become slippery or leach out of the soil.
- Soil binders may not cure if low temperatures occur within 24 hours of application.
- The water quality impacts of some chemical soil binders are relatively unknown and some may have water quality impacts due to their chemical makeup.

Implementation

General Considerations

- Soil binders should conform to local municipality specifications and requirements.
- Site soil types will dictate appropriate soil binders to be used.
- A soil binder must be environmentally benign (non-toxic to plant and animal life), easy to apply, easy to maintain, economical, and should not stain paved or painted surfaces. Soil binders should not pollute stormwater when cured. Obtain a Material Safety Data Sheet (MSDS) from the manufacturer to ensure non-toxicity.
- Stormwater runoff from PAM treated soils should pass through one of the following sediment control BMP prior to discharging to surface waters.
  - When the total drainage area is greater than or equal to 5 acres, PAM treated areas should drain to a sediment basin.
  - Areas less than 5 acres should drain to sediment control BMPs, such as a sediment trap, or a series of check dams. The total number of check dams used should be maximized to achieve the greatest amount of settlement of sediment prior to discharging from the site. Each check dam should be spaced evenly in the drainage channel through which stormwater flows are discharged off site.
- Performance of soil binders depends on temperature, humidity, and traffic across treated areas.

- Avoid over spray onto roads, sidewalks, drainage channels, existing vegetation, etc.
- Additional guidance on the comparison and selection of temporary slope stabilization methods is provided in Appendix F of the Handbook.

Selecting a Soil Binder

Properties of common soil binders used for erosion control are provided on Table 1 at the end of this Fact Sheet. Use Table 1 to select an appropriate soil binder. Refer to WE-1, Wind Erosion Control, for dust control soil binders.

Factors to consider when selecting a soil binder include the following:

- Suitability to situation - Consider where the soil binder will be applied, if it needs a high resistance to leaching or abrasion, and whether it needs to be compatible with any existing vegetation. Determine the length of time soil stabilization will be needed, and if the soil binder will be placed in an area where it will degrade rapidly. In general, slope steepness is not a discriminating factor for the listed soil binders.
- Soil types and surface materials - Fines and moisture content are key properties of surface materials. Consider a soil binder's ability to penetrate, likelihood of leaching, and ability to form a surface crust on the surface materials.
- Frequency of application - The frequency of application is related to the functional longevity of the binder, which can be affected by subgrade conditions, surface type, climate, and maintenance schedule.
- Frequent applications could lead to high costs. Application frequency may be minimized if the soil binder has good penetration, low evaporation, and good longevity. Consider also that frequent application will require frequent equipment clean up.

Plant-Material-Based (Short Lived, <6 months) Binders

Guar: Guar is a non-toxic, biodegradable, natural galactomannan-based hydrocolloid treated with dispersant agents for easy field mixing. It should be mixed with water at the rate of 11 to 15 lb per 1,000 gallons. Recommended minimum application rates are as follows:

Application Rates for Guar Soil Stabilizer

Slope (H:V):	Flat	4:1	3:1	2:1	1:1
lb/acre:	40	45	50	60	70

Psyllium: Psyllium is composed of the finely ground muciloid coating of plantago seeds that is applied as a dry powder or in a wet slurry to the surface of the soil. It dries to form a firm but rewettable membrane that binds soil particles together, but permits germination and growth of seed. Psyllium requires 12 to 18 hours drying time. Application rates should be from 80 to 200 lb/acre, with enough water in solution to allow for a uniform slurry flow.

Starch: Starch is non-ionic, cold water soluble (pre-gelatinized) granular cornstarch. The material is mixed with water and applied at the rate of 150 lb/acre. Approximate drying time is 9 to 12 hours.

Plant-Material-Based (Long Lived, 6-12 months) Binders

Pitch and Rosin Emulsion: Generally, a non-ionic pitch and rosin emulsion has a minimum solids content of 48%. The rosin should be a minimum of 26% of the total solids content. The soil stabilizer should be non-corrosive, water dilutable emulsion that upon application cures to a water insoluble binding and cementing agent. For soil erosion control applications, the emulsion is diluted and should be applied as follows:

- For clayey soil: 5 parts water to 1 part emulsion
- For sandy soil: 10 parts water to 1 part emulsion

Application can be by water truck or hydraulic seeder with the emulsion and product mixture applied at the rate specified by the manufacturer.

Polymeric Emulsion Blend Binders

Acrylic Copolymers and Polymers: Polymeric soil stabilizers should consist of a liquid or solid polymer or copolymer with an acrylic base that contains a minimum of 55% solids. The polymeric compound should be handled and mixed in a manner that will not cause foaming or should contain an anti-foaming agent. The polymeric emulsion should not exceed its shelf life or expiration date; manufacturers should provide the expiration date. Polymeric soil stabilizer should be readily miscible in water, non-injurious to seed or animal life, non-flammable, should provide surface soil stabilization for various soil types without totally inhibiting water infiltration, and should not re-emulsify when cured. The applied compound typically requires 12 to 24 hours drying time. Liquid copolymer should be diluted at a rate of 10 parts water to 1 part polymer and the mixture applied to soil at a rate of 1,175 gallons/acre.

Liquid Polymers of Methacrylates and Acrylates: This material consists of a tackifier/sealer that is a liquid polymer of methacrylates and acrylates. It is an aqueous 100% acrylic emulsion blend of 40% solids by volume that is free from styrene, acetate, vinyl, ethoxylated surfactants or silicates. For soil stabilization applications, it is diluted with water in accordance with the manufacturer's recommendations, and applied with a hydraulic seeder at the rate of 20 gallons/acre. Drying time is 12 to 18 hours after application.

Copolymers of Sodium Acrylates and Acrylamides: These materials are non-toxic, dry powders that are copolymers of sodium acrylate and acrylamide. They are mixed with water and applied to the soil surface for erosion control at rates that are determined by slope gradient:

Slope Gradient (H:V)	lb/acre
Flat to 5:1	3.0 – 5.0
5:1 to 3:1	5.0 – 10.0
2:1 to 1:1	10.0 – 20.0

Poly-Acrylamide (PAM) and Copolymer of Acrylamide: Linear copolymer polyacrylamide for use as a soil binder is packaged as a dry flowable solid, as a liquid. Refer to the manufacturer's recommendation for dilution and application rates as they vary based on liquid or dry form, site conditions and climate.

- Limitations specific to PAM are as follows:

- Do not use PAM on a slope that flows into a water body without passing through a sediment trap or sediment basin.
- The specific PAM copolymer formulation must be anionic. Cationic PAM should not be used in any application because of known aquatic toxicity problems. Only the highest drinking water grade PAM, certified for compliance with ANSI/NSF Standard 60 for drinking water treatment, should be used for soil applications.
- PAM designated for erosion and sediment control should be "water soluble" or "linear" or "non-cross linked".
- PAM should not be used as a stand-alone BMP to protect against water-based erosion. When combined with mulch, its effectiveness increases dramatically.

Hydro-Colloid Polymers: Hydro-Colloid Polymers are various combinations of dry flowable poly-acrylamides, copolymers and hydro-colloid polymers that are mixed with water and applied to the soil surface at rates of 55 to 60 lb/acre. Drying times are 0 to 4 hours.

Cementitious-Based Binders

Gypsum: This is a formulated gypsum based product that readily mixes with water and mulch to form a thin protective crust on the soil surface. It is composed of high purity gypsum that is ground, calcined and processed into calcium sulfate hemihydrate with a minimum purity of 86%. It is mixed in a hydraulic seeder and applied at rates 4,000 to 12,000 lb/acre. Drying time is 4 to 8 hours.

Applying Soil Binders

After selecting an appropriate soil binder, the untreated soil surface must be prepared before applying the soil binder. The untreated soil surface must contain sufficient moisture to assist the agent in achieving uniform distribution. In general, the following steps should be followed:

- Follow manufacturer's written recommendations for application rates, pre-wetting of application area, and cleaning of equipment after use.
- Prior to application, roughen embankment and fill areas.
- Consider the drying time for the selected soil binder and apply with sufficient time before anticipated rainfall. Soil binders should not be applied during or immediately before rainfall.
- Avoid over spray onto roads, sidewalks, drainage channels, sound walls, existing vegetation, etc.
- Soil binders should not be applied to frozen soil, areas with standing water, under freezing or rainy conditions, or when the temperature is below 40°F during the curing period.
- More than one treatment is often necessary, although the second treatment may be diluted or have a lower application rate.
- Generally, soil binders require a minimum curing time of 24 hours before they are fully effective. Refer to manufacturer's instructions for specific cure time.

- For liquid agents:
  - Crown or slope ground to avoid ponding.
  - Uniformly pre-wet ground at 0.03 to 0.3 gal/yd² or according to manufacturer's recommendations.
  - Apply solution under pressure. Overlap solution 6 to 12 in.
  - Allow treated area to cure for the time recommended by the manufacturer; typically at least 24 hours.
  - Apply second treatment before first treatment becomes ineffective, using 50% application rate.
  - In low humidities, reactivate chemicals by re-wetting with water at 0.1 to 0.2 gal/yd².

Costs

Costs vary according to the soil stabilizer selected for implementation. The following are approximate installed costs:

Soil Binder	Cost per Acre (2000)[1]	Estimated Cost per Acre (2009)[2]
Plant-Material-Based (Short Lived) Binders	$700-$900	$770-$990
Plant-Material-Based (Long Lived) Binders	$1,200-$1,500	$1,320-$1,650
Polymeric Emulsion Blend Binders	$700 -$1,500	$770-$1,650
Cementitious-Based Binders	$800-$1,200	$880-$1,350

1. Source: Erosion Control Pilot Study Report, Caltrans, June 2000.
2. 2009 costs reflect a 10% escalation over year 2000 costs. Escalation based on informal survey of industry trends. Note: Expected cost increase is offset by competitive economic conditions.

Inspection and Maintenance

- BMPs must be inspected in accordance with General Permit requirements for the associated project type and risk level. It is recommended that at a minimum, BMPs be inspected weekly, prior to forecasted rain events, daily during extended rain events, and after the conclusion of rain events.
- Areas where erosion is evident should be repaired and BMPs re-applied as soon as possible. Care should be exercised to minimize the damage to protected areas while making repairs, as any area damaged will require re-application of BMPs.
- Reapply the selected soil binder as needed to maintain effectiveness.

Table 1 Properties of Soil Binders for Erosion Control

Evaluation Criteria	Binder Type			
	Plant Material Based (Short Lived)	Plant Material Based (Long Lived)	Polymeric Emulsion Blends	Cementitious-Based Binders
Relative Cost	Low	Moderate to High	Low to High	Low to Moderate
Resistance to Leaching	High	High	Low to Moderate	Moderate
Resistance to Abrasion	Moderate	Low	Moderate to High	Moderate to High
Longevity	Short to Medium	Medium	Medium to Long	Medium
Minimum Curing Time before Rain	9 to 18 hours	19 to 24 hours	0 to 24 hours	4 to 8 hours
Compatibility with Existing Vegetation	Good	Poor	Poor	Poor
Mode of Degradation	Biodegradable	Biodegradable	Photodegradable/ Chemically Degradable	Photodegradable/ Chemically Degradable
Labor Intensive	No	No	No	No
Specialized Application Equipment	Water Truck or Hydraulic Mulcher	Water Truck or Hydraulic Mulcher	Water Truck or Hydraulic Mulcher	Water Truck or Hydraulic Mulcher
Liquid/Powder	Powder	Liquid	Liquid/Powder	Powder
Surface Crusting	Yes, but dissolves on rewetting	Yes	Yes, but dissolves on rewetting	Yes
Clean Up	Water	Water	Water	Water
Erosion Control Application Rate	Varies (1)	Varies (1)	Varies (1)	4,000 to 12,000 lbs/acre

(1) See Implementation for specific rates.

References

Erosion Control Pilot Study Report, State of California Department of Transportation (Caltrans), June 2000.

Manual of Standards of Erosion and Sediment Control Measures, Association of Bay Area Governments, May 1995.

Sedimentation and Erosion Control, An Inventory of Current Practices Draft, US EPA, April 1990.

Stormwater Quality Handbooks Construction Site Best Management Practices (BMPs) Manual, State of California Department of Transportation (Caltrans), March 2003.

Guidance Document: Soil Stabilization for Temporary Slopes, State of California Department of Transportation (Caltrans), November 1999.

Stormwater Management for Construction Activities, Developing Pollution Prevention Plans and Best Management Practices, EPA 832-R-92005; USEPA, April 1992.

Straw Mulch EC-6

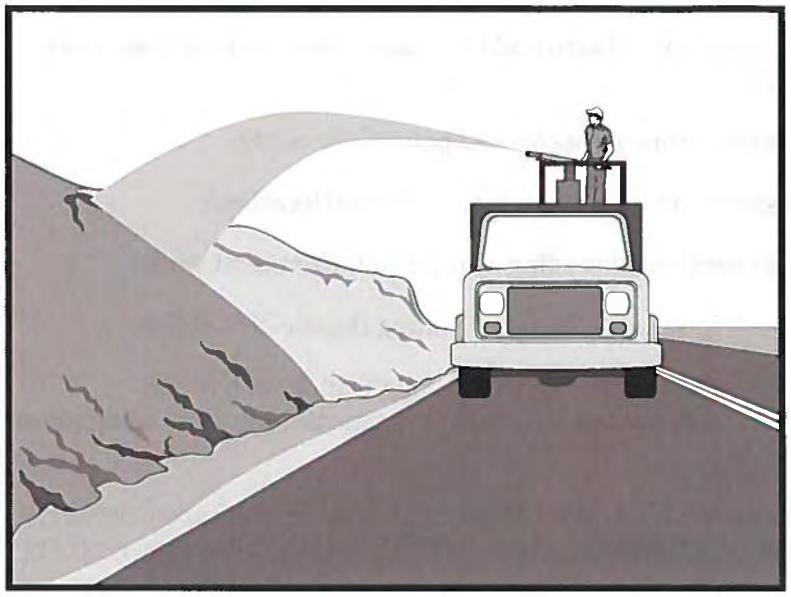

Categories

EC	Erosion Control	☑
SE	Sediment Control	
TC	Tracking Control	
WE	Wind Erosion Control	☒
NS	Non-Stormwater Management Control	
WM	Waste Management and Materials Pollution Control	

Legend:

☑ **Primary Category**

☒ **Secondary Category**

Targeted Constituents

Sediment	☑
Nutrients	
Trash	
Metals	
Bacteria	
Oil and Grease	
Organics	

Potential Alternatives

EC-3 Hydraulic Mulch

EC-4 Hydroseeding

EC-5 Soil Binders

EC-7 Geotextiles and Mats

EC-8 Wood Mulching

EC-14 Compost Blanket

Description and Purpose

Straw mulch consists of placing a uniform layer of straw and incorporating it into the soil with a studded roller or crimper, or anchoring it with a tackifier or stabilizing emulsion. Straw mulch protects the soil surface from the impact of rain drops, preventing soil particles from becoming dislodged.

Suitable Applications

Straw mulch is suitable for disturbed areas requiring temporary protection until permanent stabilization is established. Straw mulch can be specified for the following applications:

- As a stand-alone BMP on disturbed areas until soils can be prepared for permanent vegetation. The longevity of straw mulch is typically less than six months.
- Applied in combination with temporary seeding strategies
- Applied in combination with permanent seeding strategies to enhance plant establishment and final soil stabilization
- Applied around containerized plantings to control erosion until the plants become established to provide permanent stabilization

Limitations

- Availability of straw and straw blowing equipment may be limited just prior to the rainy season and prior to storms due to high demand.

CASQA
CALIFORNIA STORMWATER QUALITY ASSOCIATION

- There is a potential for introduction of weed seed and unwanted plant material if weed-free agricultural straw is not specified.
- Straw mulch applied by hand is more time intensive and potentially costly.
- Wind may limit application of straw and blow straw into undesired locations.
- May have to be removed prior to permanent seeding or prior to further earthwork.
- "Punching" of straw does not work in sandy soils, necessitating the use of tackifiers.
- Potential fugitive dust control issues associated with straw applications can occur. Application of a stabilizing emulsion or a water stream at the same time straw is being blown can reduce this problem.
- Use of plastic netting should be avoided in areas where wildlife may be entrapped and may be prohibited for projects in certain areas with sensitive wildlife species, especially reptiles and amphibians.

Implementation

- Straw should be derived from weed-free wheat, rice, or barley. Where required by the plans, specifications, permits, or environmental documents, native grass straw should be used.
- Use tackifier to anchor straw mulch to the soil on slopes.
- Crimping, punch roller-type rollers, or track walking may also be used to incorporate straw mulch into the soil on slopes. Track walking can be used where other methods are impractical.
- Avoid placing straw onto roads, sidewalks, drainage channels, sound walls, existing vegetation, etc.
- Straw mulch with tackifier should not be applied during or immediately before rainfall.
- Additional guidance on the comparison and selection of temporary slope stabilization methods is provided in Appendix F of the Handbook.

Application Procedures

- When using a tackifier to anchor the straw mulch, roughen embankment or fill areas by rolling with a crimping or punching-type roller or by track walking before placing the straw mulch. Track walking should only be used where rolling is impractical.
- Apply straw at a rate of between 3,000 and 4,000 lb/acre, either by machine or by hand distribution and provide 100% ground cover. A lighter application is used for flat surfaces and a heavier application is used for slopes.
- Evenly distribute straw mulch on the soil surface.
- Anchoring straw mulch to the soil surface by "punching" it into the soil mechanically (incorporating) can be used in lieu of a tackifier.

- Methods for holding the straw mulch in place depend upon the slope steepness, accessibility, soil conditions, and longevity.
  - A tackifier acts to glue the straw fibers together and to the soil surface. The tackifier should be selected based on longevity and ability to hold the fibers in place. A tackifier is typically applied at a rate of 125 lb/acre. In windy conditions, the rates are typically 180 lb/acre.
  - On very small areas, a spade or shovel can be used to punch in straw mulch.
  - On slopes with soils that are stable enough and of sufficient gradient to safely support construction equipment without contributing to compaction and instability problems, straw can be "punched" into the ground using a knife blade roller or a straight bladed coulter, known commercially as a "crimper."

Costs

Average annual cost for installation and maintenance is included in the table below. Application by hand is more time intensive and potentially more costly.

BMP	Unit Cost per Acre
Straw mulch, crimped or punched	$2,458-$5,375
Straw mulch with tackifier	$1,823-$4,802

Source: Caltrans Soil Stabilization BMP Research for Erosion and Sediment Controls, July 2007

Inspection and Maintenance

- BMPs must be inspected in accordance with General Permit requirements for the associated project type and risk level. It is recommended that at a minimum, BMPs be inspected weekly, prior to forecasted rain events, daily during extended rain events, and after the conclusion of rain events.
- Areas where erosion is evident should be repaired and BMPs re-applied as soon as possible. Care should be exercised to minimize the damage to protected areas while making repairs, as any area damaged will require re-application of BMPs.
- The key consideration in inspection and maintenance is that the straw needs to last long enough to achieve erosion control objectives. Straw mulch as a stand-alone BMP is temporary and is not suited for long-term erosion control.
- Maintain an unbroken, temporary mulched ground cover while disturbed soil areas are inactive. Repair any damaged ground cover and re-mulch exposed areas.
- Reapplication of straw mulch and tackifier may be required to maintain effective soil stabilization over disturbed areas and slopes.

References

Soil Stabilization BMP Research for Erosion and Sediment Controls: Cost Survey Technical Memorandum, State of California Department of Transportation (Caltrans), July 2007.

Erosion and Sediment Control Manual, Oregon Department of Environmental Quality, February 2005.

Controlling Erosion of Construction Sites, Agricultural Information Bulletin #347, U.S. Department of Agriculture (USDA), Natural Resources Conservation Service (NRCS) (formerly Soil Conservation Service – SCS).

Guides for Erosion and Sediment Control in California, USDA Soils Conservation Service, January 1991.

Manual of Standards of Erosion and Sediment Control Measures, Association of Bay Area Governments, May 1995.

Soil Erosion by Water, Agricultural Information Bulletin #513, U.S. Department of Agriculture, Soil Conservation Service.

Stormwater Quality Handbooks Construction Site Best Management Practices (BMPs) Manual, State of California Department of Transportation (Caltrans), March 2003.

Stormwater Management of the Puget Sound Basin, Technical Manual, Publication #91-75, Washington State Department of Ecology, February 1992.

Water Quality Management Plan for the Lake Tahoe Region, Volume II, Handbook of Management Practices, Tahoe Regional Planning Agency, November 1988.

Geotextiles and Mats EC-7

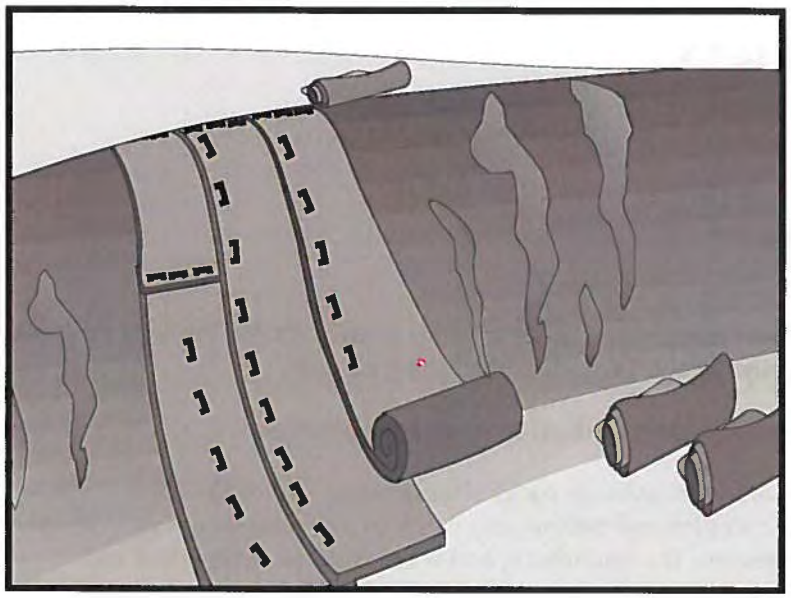

Categories

EC	Erosion Control	☑
SE	Sediment Control	
TC	Tracking Control	
WE	Wind Erosion Control	☒
NS	Non-Stormwater Management Control	
WM	Waste Management and Materials Pollution Control	

Legend:

☑ **Primary Category**

☒ **Secondary Category**

Targeted Constituents

Sediment	☑
Nutrients	
Trash	
Metals	
Bacteria	
Oil and Grease	
Organics	

Potential Alternatives

EC-3 Hydraulic Mulch

EC-4 Hydroseeding

Description and Purpose

Mattings, or Rolled Erosion Control Products (RECPs), can be made of natural or synthetic materials or a combination of the two. RECPs are used to cover the soil surface to reduce erosion from rainfall impact, hold soil in place, and absorb and hold moisture near the soil surface. Additionally, RECPs may be used to stabilize soils until vegetation is established or to reinforce non-woody surface vegetation.

Suitable Applications

RECPs are typically applied on slopes where erosion hazard is high and vegetation will be slow to establish. Mattings are also used on stream banks, swales and other drainage channels where moving water at velocities between 3 ft/s and 6 ft/s are likely to cause scour and wash out new vegetation, and in areas where the soil surface is disturbed and where existing vegetation has been removed. RECPs may also be used when seeding cannot occur (e.g., late season construction and/or the arrival of an early rain season). RECPs should be considered when the soils are fine grained and potentially erosive. RECPs should be considered in the following situations.

- Steep slopes, generally steeper than 3:1 (H:V)
- Slopes where the erosion potential is high
- Slopes and disturbed soils where mulch must be anchored
- Disturbed areas where plants are slow to develop

- Channels with flows exceeding 3.3 ft/s
- Channels to be vegetated
- Stockpiles
- Slopes adjacent to water bodies

Limitations

- RECP installed costs are generally higher than other erosion control BMPs, limiting their use to areas where other BMPs are ineffective (e.g. channels, steep slopes).
- RECPs may delay seed germination, due to reduction in soil temperature.
- RECPs are generally not suitable for excessively rocky sites or areas where the final vegetation will be mowed (since staples and netting can catch in mowers). If a staple or pin cannot be driven into the soil because the underlying soil is too hard or rocky, then an alternative BMP should be selected.
- If used for temporary erosion control, RECPs should be removed and disposed of prior to application of permanent soil stabilization measures.
- The use of plastic should be limited to covering stockpiles or very small graded areas for short periods of time (such as through one imminent storm event) until more environmentally friendly measures, such as seeding and mulching, may be installed.
    - Plastic sheeting is easily vandalized, easily torn, photodegradable, and must be disposed of at a landfill.
    - Plastic sheeting results in 100% runoff, which may cause serious erosion problems in the areas receiving the increased flow.
- RECPs may have limitations based on soil type, slope gradient, or channel flow rate; consult the manufacturer for proper selection.
- Not suitable for areas that have foot traffic (tripping hazard) – e.g., pad areas around buildings under construction.
- RECPs that incorporate a plastic netting (e.g. straw blanket typically uses a plastic netting to hold the straw in place) may not be suitable near known wildlife habitat. Wildlife can become trapped in the plastic netting.
- RECPs may have limitations in extremely windy climates. However, when RECPs are properly trenched at the top and bottom and stapled in accordance with the manufacturer's recommendations, problems with wind can be minimized.

Implementation

Material Selection

- Natural RECPs have been found to be effective where re-vegetation will be provided by re-seeding. The choice of material should be based on the size of area, side slopes, surface conditions such as hardness, moisture, weed growth, and availability of materials.
- Additional guidance on the comparison and selection of temporary slope stabilization methods is provided in Appendix F of the Handbook.
- The following natural and synthetic RECPs are commonly used:

Geotextiles

- Material can be a woven or a non-woven polypropylene fabric with minimum thickness of 0.06 in., minimum width of 12 ft and should have minimum tensile strength of 150 lbs (warp), 80 lbs (fill) in conformance with the requirements in ASTM Designation: D 4632. The permittivity of the fabric should be approximately 0.07 sec^{-1} in conformance with the requirements in ASTM Designation: D4491. The fabric should have an ultraviolet (UV) stability of 70 percent in conformance with the requirements in ASTM designation: D4355. Geotextile blankets must be secured in place with wire staples or sandbags and by keying into tops of slopes to prevent infiltration of surface waters under geotextile. Staples should be made of minimum 11 gauge steel wire and should be U-shaped with 8 in. legs and 2 in. crown.
- Geotextiles may be reused if they are suitable for the use intended.

Plastic Covers

- Generally plastic sheeting should only be used as stockpile covering or for very small graded areas for short periods of time (such as through one imminent storm event). If plastic sheeting must be used, choose a plastic that will withstand photo degradation.
- Plastic sheeting should have a minimum thickness of 6 mils, and must be keyed in at the top of slope (when used as a temporary slope protection) and firmly held in place with sandbags or other weights placed no more than 10 ft apart. Seams are typically taped or weighted down their entire length, and there should be at least a 12 in. to 24 in. overlap of all seams. Edges should be embedded a minimum of 6 in. in soil (when used as a temporary slope protection).
- All sheeting must be inspected periodically after installation and after significant rainstorms to check for erosion, undermining, and anchorage failure. Any failures must be repaired immediately. If washout or breakages occur, the material should be re-installed after repairing the damage to the slope.

Erosion Control Blankets/Mats

- Biodegradable RECPs are typically composed of jute fibers, curled wood fibers, straw, coconut fiber, or a combination of these materials. In order for an RECP to be considered 100% biodegradable, the netting, sewing or adhesive system that holds the biodegradable mulch fibers together must also be biodegradable. See typical installation details at the end of this fact sheet.

- **Jute** is a natural fiber that is made into a yarn that is loosely woven into a biodegradable mesh. The performance of jute as a stand-alone RECP is low. Most other RECPs outperform jute as a temporary erosion control product and therefore jute is not commonly used. It is designed to be used in conjunction with vegetation. The material is supplied in rolled strips, which should be secured to the soil with U-shaped staples or stakes in accordance with manufacturers' recommendations.

- **Excelsior** (curled wood fiber) blanket material should consist of machine produced mats of curled wood excelsior with 80 percent of the fiber 6 in. or longer. The excelsior blanket should be of consistent thickness. The wood fiber must be evenly distributed over the entire area of the blanket. The top surface of the blanket should be covered with a photodegradable extruded plastic mesh. The blanket should be smolder resistant without the use of chemical additives and should be non-toxic and non-injurious to plant and animal life. Excelsior blankets should be furnished in rolled strips, a minimum of 48 in. wide, and should have an average weight of 0.8 lb/yd^2, ±10 percent, at the time of manufacture. Excelsior blankets must be secured in place with wire staples. Staples should be made of minimum 11 gauge steel wire and should be U-shaped with 8 in. legs and 2 in. crown.

- **Straw blanket** should be machine produced mats of straw with a lightweight biodegradable netting top layer. The straw should be attached to the netting with biodegradable thread or glue strips. The straw blanket should be of consistent thickness. The straw should be evenly distributed over the entire area of the blanket. Straw blanket should be furnished in rolled strips a minimum of 6.5 ft wide, a minimum of 80 ft long and a minimum of 0.5 lb/yd^2. Straw blankets must be secured in place with wire staples. Staples should be made of minimum 11 gauge steel wire and should be U-shaped with 8 in. legs and 2 in. crown.

- **Wood fiber blanket** is composed of biodegradable fiber mulch with extruded plastic netting held together with adhesives. The material is designed to enhance re-vegetation. The material is furnished in rolled strips, which must be secured to the ground with U-shaped staples or stakes in accordance with manufacturers' recommendations.

- **Coconut fiber blanket** should be a machine produced mat of 100 percent coconut fiber with biodegradable netting on the top and bottom. The coconut fiber should be attached to the netting with biodegradable thread or glue strips. The coconut fiber blanket should be of consistent thickness. The coconut fiber should be evenly distributed over the entire area of the blanket. Coconut fiber blanket should be furnished in rolled strips with a minimum of 6.5 ft wide, a minimum of 80 ft. long and a minimum of 0.5 lb/yd^2. Coconut fiber blankets must be secured in place with wire staples. Staples should be made of minimum 11 gauge steel wire and should be U-shaped with 8 in. legs and 2 in. crown.

- **Coconut fiber mesh** is a thin permeable membrane made from coconut or corn fiber that is spun into a yarn and woven into a biodegradable mat. It is designed to be used in conjunction with vegetation and typically has longevity of several years. The material is supplied in rolled strips, which must be secured to the soil with U-shaped staples or stakes in accordance with manufacturers' recommendations.

- **Straw coconut fiber blanket** should be machine produced mats of 70 percent straw and 30 percent coconut fiber with a biodegradable netting top layer and a biodegradable bottom net. The straw and coconut fiber should be attached to the netting with biodegradable thread or glue strips. The straw coconut fiber blanket should be of consistent thickness. The straw and coconut fiber should be evenly distributed over the entire area of the blanket. Straw coconut fiber blanket should be furnished in rolled strips a minimum of 6.5 ft wide, a minimum of 80 ft long and a minimum of 0.5 lb/yd^2. Straw coconut fiber blankets must be secured in place with wire staples. Staples should be made of minimum 11 gauge steel wire and should be U-shaped with 8 in. legs and 2 in. crown.

- Non-biodegradable RECPs are typically composed of polypropylene, polyethylene, nylon or other synthetic fibers. In some cases, a combination of biodegradable and synthetic fibers is used to construct the RECP. Netting used to hold these fibers together is typically non-biodegradable as well.

  - **Plastic netting** is a lightweight biaxially oriented netting designed for securing loose mulches like straw or paper to soil surfaces to establish vegetation. The netting is photodegradable. The netting is supplied in rolled strips, which must be secured with U-shaped staples or stakes in accordance with manufacturers' recommendations.

  - **Plastic mesh** is an open weave geotextile that is composed of an extruded synthetic fiber woven into a mesh with an opening size of less than ¼ in. It is used with re-vegetation or may be used to secure loose fiber such as straw to the ground. The material is supplied in rolled strips, which must be secured to the soil with U-shaped staples or stakes in accordance with manufacturers' recommendations.

  - **Synthetic fiber with netting** is a mat that is composed of durable synthetic fibers treated to resist chemicals and ultraviolet light. The mat is a dense, three dimensional mesh of synthetic (typically polyolefin) fibers stitched between two polypropylene nets. The mats are designed to be re-vegetated and provide a permanent composite system of soil, roots, and geomatrix. The material is furnished in rolled strips, which must be secured with U-shaped staples or stakes in accordance with manufacturers' recommendations.

  - **Bonded synthetic fibers** consist of a three dimensional geomatrix nylon (or other synthetic) matting. Typically it has more than 90 percent open area, which facilitates root growth. It's tough root reinforcing system anchors vegetation and protects against hydraulic lift and shear forces created by high volume discharges. It can be installed over prepared soil, followed by seeding into the mat. Once vegetated, it becomes an invisible composite system of soil, roots, and geomatrix. The material is furnished in rolled strips that must be secured with U-shaped staples or stakes in accordance with manufacturers' recommendations.

  - **Combination synthetic and biodegradable RECPs** consist of biodegradable fibers, such as wood fiber or coconut fiber, with a heavy polypropylene net stitched to the top and a high strength continuous filament geomatrix or net stitched to the bottom. The material is designed to enhance re-vegetation. The material is furnished in rolled strips,

which must be secured with U-shaped staples or stakes in accordance with manufacturers' recommendations.

Site Preparation

- Proper soil preparation is essential to ensure complete contact of the RECP with the soil. Soil Roughening is not recommended in areas where RECPs will be installed.
- Grade and shape the area of installation.
- Remove all rocks, clods, vegetation or other obstructions so that the installed blankets or mats will have complete, direct contact with the soil.
- Prepare seedbed by loosening 2 to 3 in. of topsoil.

Seeding/Planting

Seed the area before blanket installation for erosion control and re-vegetation. Seeding after mat installation is often specified for turf reinforcement application. When seeding prior to blanket installation, all areas disturbed during blanket installation must be re-seeded. Where soil filling is specified for turf reinforcement mats (TRMs), seed the matting and the entire disturbed area after installation and prior to filling the mat with soil.

Fertilize and seed in accordance with seeding specifications or other types of landscaping plans. The protective matting can be laid over areas where grass has been planted and the seedlings have emerged. Where vines or other ground covers are to be planted, lay the protective matting first and then plant through matting according to design of planting.

Check Slots

Check slots shall be installed as required by the manufacturer.

Laying and Securing Matting

- Before laying the matting, all check slots should be installed and the seedbed should be friable, made free from clods, rocks, and roots. The surface should be compacted and finished according to the requirements of the manufacturer's recommendations.
- Mechanical or manual lay down equipment should be capable of handling full rolls of fabric and laying the fabric smoothly without wrinkles or folds. The equipment should meet the fabric manufacturer's recommendations or equivalent standards.

Anchoring

- U-shaped wire staples, metal geotextile stake pins, or triangular wooden stakes can be used to anchor mats and blankets to the ground surface.
- Wire staples should be made of minimum 11 gauge steel wire and should be U-shaped with 8 in. legs and 2 in. crown.
- Metal stake pins should be 0.188 in. diameter steel with a 1.5 in. steel washer at the head of the pin, and 8 in. in length.
- Wire staples and metal stakes should be driven flush to the soil surface.

Installation on Slopes

Installation should be in accordance with the manufacturer's recommendations. In general, these will be as follows:

- Begin at the top of the slope and anchor the blanket in a 6 in. deep by 6 in. wide trench. Backfill trench and tamp earth firmly.
- Unroll blanket down slope in the direction of water flow.
- Overlap the edges of adjacent parallel rolls 2 to 3 in. and staple every 3 ft (or greater, per manufacturer's specifications).
- When blankets must be spliced, place blankets end over end (shingle style) with 6 in. overlap. Staple through overlapped area, approximately 12 in. apart.
- Lay blankets loosely and maintain direct contact with the soil. Do not stretch.
- Staple blankets sufficiently to anchor blanket and maintain contact with the soil. Staples should be placed down the center and staggered with the staples placed along the edges. Steep slopes, 1:1 (H:V) to 2:1 (H:V), require a minimum of 2 staples/yd^2. Moderate slopes, 2:1 (H:V) to 3:1 (H:V), require a minimum of 1 ½ staples/yd^2. Check manufacturer's specifications to determine if a higher density staple pattern is required.

Installation in Channels

Installation should be in accordance with the manufacturer's recommendations. In general, these will be as follows:

- Dig initial anchor trench 12 in. deep and 6 in. wide across the channel at the lower end of the project area.
- Excavate intermittent check slots, 6 in. deep and 6 in. wide across the channel at 25 to 30 ft intervals along the channels.
- Cut longitudinal channel anchor trenches 4 in. deep and 4 in. wide along each side of the installation to bury edges of matting, whenever possible extend matting 2 to 3 in. above the crest of the channel side slopes.
- Beginning at the downstream end and in the center of the channel, place the initial end of the first roll in the anchor trench and secure with fastening devices at 12 in. intervals. Note: matting will initially be upside down in anchor trench.
- In the same manner, position adjacent rolls in anchor trench, overlapping the preceding roll a minimum of 3 in.
- Secure these initial ends of mats with anchors at 12 in. intervals, backfill and compact soil.
- Unroll center strip of matting upstream. Stop at next check slot or terminal anchor trench. Unroll adjacent mats upstream in similar fashion, maintaining a 3 in. overlap.

- Fold and secure all rolls of matting snugly into all transverse check slots. Lay mat in the bottom of the slot then fold back against itself. Anchor through both layers of mat at 12 in. intervals, then backfill and compact soil. Continue rolling all mat widths upstream to the next check slot or terminal anchor trench.
- Alternate method for non-critical installations: Place two rows of anchors on 6 in. centers at 25 to 30 ft. intervals in lieu of excavated check slots.
- Staple shingled lap spliced ends a minimum of 12 in. apart on 12 in. intervals.
- Place edges of outside mats in previously excavated longitudinal slots; anchor using prescribed staple pattern, backfill, and compact soil.
- Anchor, fill, and compact upstream end of mat in a 12 in. by 6 in. terminal trench.
- Secure mat to ground surface using U-shaped wire staples, geotextile pins, or wooden stakes.
- Seed and fill turf reinforcement matting with soil, if specified.

Soil Filling (if specified for turf reinforcement mat (TRM))

Installation should be in accordance with the manufacturer's recommendations. Typical installation guidelines are as follows:

- After seeding, spread and lightly rake ½-3/4 inches of fine topsoil into the TRM apertures to completely fill TRM thickness. Use backside of rake or other flat implement.
- Alternatively, if allowed by product specifications, spread topsoil using lightweight loader, backhoe, or other power equipment. Avoid sharp turns with equipment.
- Always consult the manufacturer's recommendations for installation.
- Do not drive tracked or heavy equipment over mat.
- Avoid any traffic over matting if loose or wet soil conditions exist.
- Use shovels, rakes, or brooms for fine grading and touch up.
- Smooth out soil filling just exposing top netting of mat.

Temporary Soil Stabilization Removal

- Temporary soil stabilization removed from the site of the work must be disposed of if necessary.

Costs

Installed costs can be relatively high compared to other BMPs. Approximate costs for installed materials are shown below:

Rolled Erosion Control Products		Installed Cost per Acre (2000)[1]	Estimated Cost per Acre (2009)[2]
Biodegradable	Jute Mesh	$6,000-$7,000	$6,600-$7,700
	Curled Wood Fiber	$8,000-$10,500	$8,800-$11,050
	Straw	$8,000-$10,500	$8,800-$11,050
	Wood Fiber	$8,000-$10,500	$8,800-$11,050
	Coconut Fiber	$13,000-$14,000	$14,300-$15,400
	Coconut Fiber Mesh	$30,000-$33,000	$33,000-$36,300
	Straw Coconut Fiber	$10,000-$12,000	$11,000-$13,200
Non-Biodegradable	Plastic Netting	$2,000-$2,200	$2,200-$2,220
	Plastic Mesh	$3,000-$3,500	$3,300-$3,850
	Synthetic Fiber with Netting	$34,000-$40,000	$37,400-$44,000
	Bonded Synthetic Fibers	$45,000-$55,000	$49,500-$60,500
	Combination with Biodegradable	$30,000-$36,000	$33,000-$39,600

1. Source: Erosion Control Pilot Study Report, Caltrans, June 2000.
2. 2009 costs reflect a 10% escalation over year 2000 costs. Escalation based on informal survey of industry trends. Note: Expected cost increase is offset by competitive economic conditions.

Inspection and Maintenance

- RECPs must be inspected in accordance with General Permit requirements for the associated project type and risk level. It is recommended that at a minimum, BMPs be inspected weekly, prior to forecasted rain events, daily during extended rain events, and after the conclusion of rain events.
- Areas where erosion is evident shall be repaired and BMPs reapplied as soon as possible. Care should be exercised to minimize the damage to protected areas while making repairs, as any area damaged will require reapplication of BMPs.
- If washout or breakage occurs, re-install the material after repairing the damage to the slope or channel.
- Make sure matting is uniformly in contact with the soil.
- Check that all the lap joints are secure.
- Check that staples are flush with the ground.

References

Erosion and Sediment Control Manual, Oregon Department of Environmental Quality, February 2005

Erosion Control Pilot Study Report, State of California Department of Transportation (Caltrans), June 2000.

Guides for Erosion and Sediment Controls in California, USDA Soils Conservation Service, January 1991.

National Management Measures to Control Nonpoint Source Pollution from Urban Areas, United States Environmental Protection Agency, 2002.

Stormwater Quality Handbooks Construction Site Best Management Practices (BMPs) Manual, State of California Department of Transportation (Caltrans), March 2003.

Guidance Document: Soil Stabilization for Temporary Slopes, State of California Department of Transportation (Caltrans), November 1999.

Stormwater Management of the Puget Sound Basin, Technical Manual, Publication #91-75, Washington State Department of Ecology, February 1992.

Water Quality Management Plan for The Lake Tahoe Region, Volume II, Handbook of Management Practices, Tahoe Regional Planning Agency, November 1988.

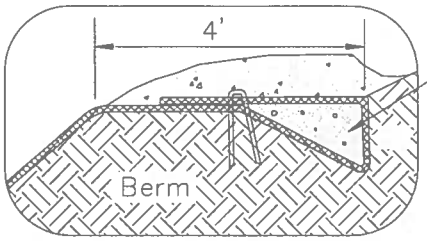

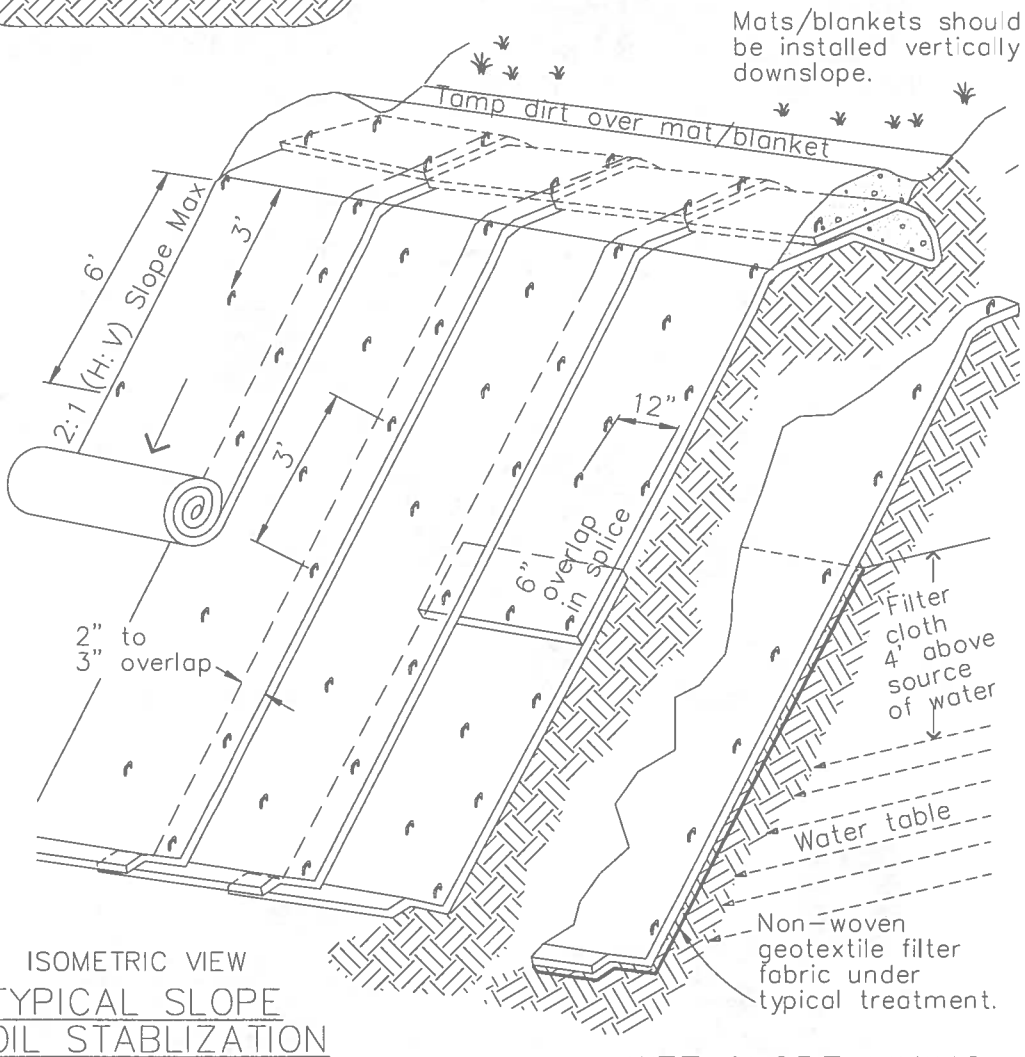

ISOMETRIC VIEW

TYPICAL SLOPE SOIL STABLIZATION

NTS

WET SLOPE LINING

NTS

NOTES:

1. Slope surface shall be free of rocks, clods, sticks and grass. Mats/blankets shall have good soil contact.
2. Lay blankets loosely and stake or staple to maintain direct contact with the soil. Do not stretch.
3. Install per manufacturer's recommendations

TYPICAL INSTALLATION DETAIL

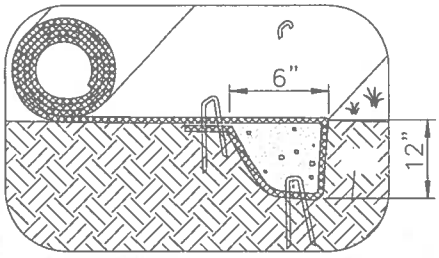

INITIAL CHANNEL ANCHOR TRENCH
NTS

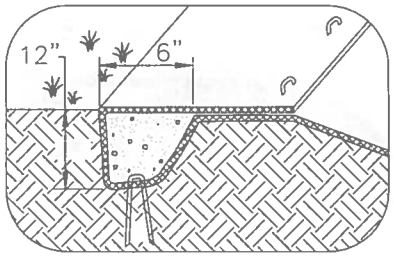

TERMINAL SLOPE AND CHANNEL ANCHOR TRENCH
NTS

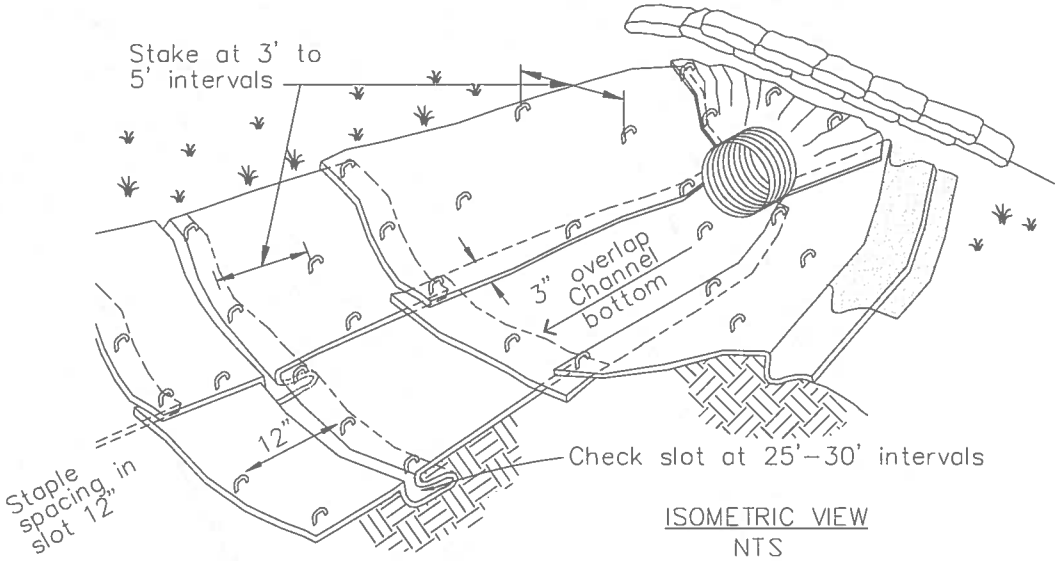

ISOMETRIC VIEW
NTS

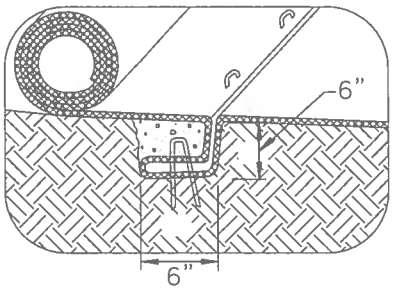

INTERMITTENT CHECK SLOT
NTS

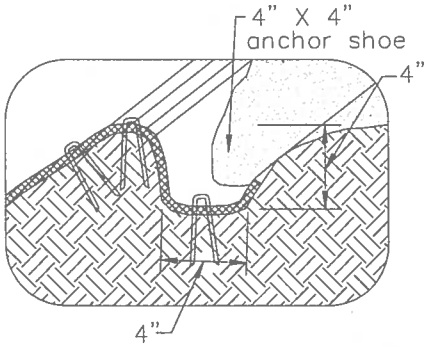

LONGITUDINAL ANCHOR TRENCH
NTS

NOTES:
1. Check slots to be constructed per manufacturers specifications.
2. Staking or stapling layout per manufacturers specifications.
3. Install per manufacturer's recommendations

TYPICAL INSTALLATION DETAIL

Wood Mulching EC-8

Categories

EC	Erosion Control	☑
SE	Sediment Control	
TC	Tracking Control	
WE	Wind Erosion Control	☒
NS	Non-Stormwater Management Control	
WM	Waste Management and Materials Pollution Control	

Legend:

☑ **Primary Objective**

☒ **Secondary Objective**

Targeted Constituents

Sediment	☑
Nutrients	
Trash	
Metals	
Bacteria	
Oil and Grease	
Organics	

Potential Alternatives

EC-3 Hydraulic Mulch

EC-4 Hydroseeding

EC-5 Soil Binders

EC-6 Straw Mulch

EC-7 Geotextiles and Mats

Description and Purpose

Wood mulching consists of applying a mixture of shredded wood mulch, bark or compost to disturbed soils. The primary function of wood mulching is to reduce erosion by protecting bare soil from rainfall impact, increasing infiltration, and reducing runoff.

Suitable Applications

Wood mulching is suitable for disturbed soil areas requiring temporary protection until permanent stabilization is established.

Limitations

- Not suitable for use on slopes steeper than 3:1 (H:V). Best suited to flat areas or gentle slopes or 5:1 (H:V) or flatter.
- Wood mulch and compost may introduce unwanted species.
- Not suitable for areas exposed to concentrated flows.
- May need to be removed prior to further earthwork.

Implementation

Mulch Selection

There are many types of mulches. Selection of the appropriate type of mulch should be based on the type of application, site conditions, and compatibility with planned or future uses.

Application Procedures

Prior to application, after existing vegetation has been

CASQA
CALIFORNIA STORMWATER QUALITY ASSOCIATION

removed, roughen embankment and fill areas by rolling with a device such as a punching type roller or by track walking. The construction application procedures for mulches vary significantly depending upon the type of mulching method specified. Two methods are highlighted here:

- Green Material: This type of mulch is produced by the recycling of vegetation trimmings such as grass, shredded shrubs, and trees. Methods of application are generally by hand although pneumatic methods are available.
  - Green material can be used as a temporary ground cover with or without seeding.
  - The green material should be evenly distributed on site to a depth of not more than 2 in.
- Shredded Wood: Suitable for ground cover in ornamental or revegetated plantings.
  - Shredded wood/bark is conditionally suitable. See note under limitations.
  - Distribute by hand or use pneumatic methods.
  - Evenly distribute the mulch across the soil surface to a depth of 2 to 3 in.
- Avoid mulch placement onto roads, sidewalks, drainage channels, existing vegetation, etc.

Costs

Average annual cost for installation and maintenance (3-4 months useful life) is around $4,000 per acre, but cost can increase if the source is not close to the project site.

Inspection and Maintenance

- Inspect BMPs prior to forecast rain, daily during extended rain events, after rain events, weekly during the rainy season, and at two-week intervals during the non-rainy season.
- Areas where erosion is evident shall be repaired and BMPs reapplied as soon as possible. Care should be exercised to minimize the damage to protected areas while making repairs, as any area damaged will require reapplication of BMPs.
- Regardless of the mulching technique selected, the key consideration in inspection and maintenance is that the mulch needs to last long enough to achieve erosion control objectives. If the mulch is applied as a stand alone erosion control method over disturbed areas (without seed), it should last the length of time the site will remain barren or until final re-grading and revegetation.
- Where vegetation is not the ultimate cover, such as ornamental and landscape applications of bark or wood chips, inspection and maintenance should focus on longevity and integrity of the mulch.
- Reapply mulch when bare earth becomes visible.

References

Controlling Erosion of Construction Sites Agriculture Information Bulletin #347, U.S. Department of Agriculture (USDA), Natural Resources Conservation Service (NRCS) (formerly Soil Conservation Service – SCS).

Guides for Erosion and Sediment Control in California, USDA Soils Conservation Service, January 1991.

Manual of Standards of Erosion and Sediment Control Measures, Association of Bay Area Governments, May 1995.

Proposed Guidance Specifying Management Measures for Sources of Nonpoint Pollution in Coastal Waters, Work Group Working Paper, USEPA, April 1992.

Sedimentation and Erosion Control, An Inventory of Current Practices Draft, U.S. EPA, April 1990.

Soil Erosion by Water Agricultural Information Bulletin #513, U.S. Department of Agriculture, Soil Conservation Service.

Stormwater Quality Handbooks Construction Site Best Management Practices (BMPs) Manual, State of California Department of Transportation (Caltrans), November 2000.

Water Quality Management Plan for the Lake Tahoe Region, Volume II, Handbook of Management Practices, Tahoe Regional Planning Agency, November 1988.

Earth Dikes and Drainage Swales EC-9

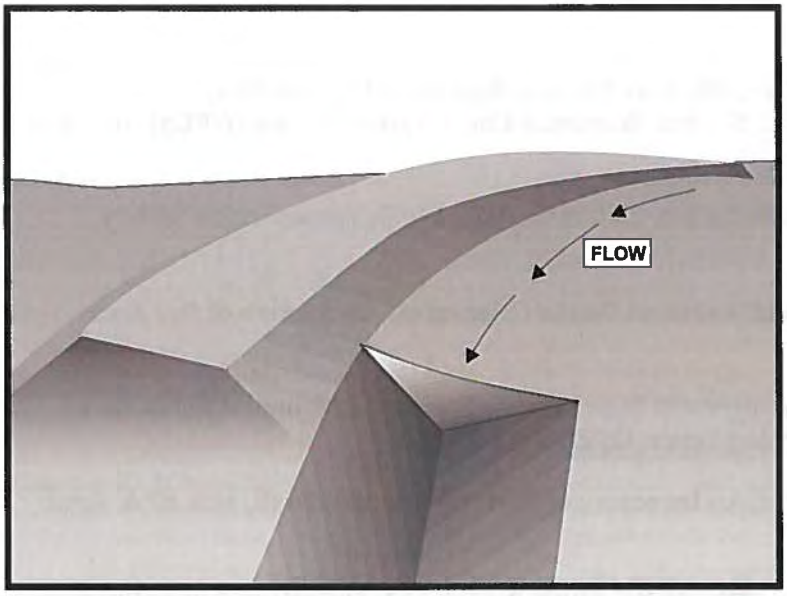

Categories

EC	Erosion Control	☑
SE	Sediment Control	
TC	Tracking Control	
WE	Wind Erosion Control	
NS	Non-Stormwater Management Control	
WM	Waste Management and Materials Pollution Control	

Legend:

☑ **Primary Objective**

☒ **Secondary Objective**

Targeted Constituents

Sediment	☑
Nutrients	
Trash	
Metals	
Bacteria	
Oil and Grease	
Organics	

Potential Alternatives

None

Description and Purpose

An earth dike is a temporary berm or ridge of compacted soil used to divert runoff or channel water to a desired location. A drainage swale is a shaped and sloped depression in the soil surface used to convey runoff to a desired location. Earth dikes and drainage swales are used to divert off site runoff around the construction site, divert runoff from stabilized areas and disturbed areas, and direct runoff into sediment basins or traps.

Suitable Applications

Earth dikes and drainage swales are suitable for use, individually or together, where runoff needs to be diverted from one area and conveyed to another.

- Earth dikes and drainage swales may be used:
  - To convey surface runoff down sloping land
  - To intercept and divert runoff to avoid sheet flow over sloped surfaces
  - To divert and direct runoff towards a stabilized watercourse, drainage pipe or channel
  - To intercept runoff from paved surfaces
  - Below steep grades where runoff begins to concentrate
  - Along roadways and facility improvements subject to flood drainage

- At the top of slopes to divert runon from adjacent or undisturbed slopes
- At bottom and mid slope locations to intercept sheet flow and convey concentrated flows
- Divert sediment laden runoff into sediment basins or traps

Limitations

Dikes should not be used for drainage areas greater than 10 acres or along slopes greater than 10 percent. For larger areas more permanent drainage structures should be built. All drainage structures should be built in compliance with local municipal requirements.

- Earth dikes may create more disturbed area on site and become barriers to construction equipment.
- Earth dikes must be stabilized immediately, which adds cost and maintenance concerns.
- Diverted stormwater may cause downstream flood damage.
- Dikes should not be constructed of soils that may be easily eroded.
- Regrading the site to remove the dike may add additional cost.
- Temporary drains and swales or any other diversion of runoff should not adversely impact upstream or downstream properties.
- Temporary drains and swales must conform to local floodplain management requirements.
- Earth dikes/drainage swales are not suitable as sediment trapping devices.
- It may be necessary to use other soil stabilization and sediment controls such as check dams, plastics, and blankets, to prevent scour and erosion in newly graded dikes, swales, and ditches.
- Sediment accumulation, scour depressions, and/or persistent non-stormwater discharges can result in areas of standing water suitable for mosquito production in drainage swales.

Implementation

The temporary earth dike is a berm or ridge of compacted soil, located in such a manner as to divert stormwater to a sediment trapping device or a stabilized outlet, thereby reducing the potential for erosion and offsite sedimentation. Earth dikes can also be used to divert runoff from off site and from undisturbed areas away from disturbed areas and to divert sheet flows away from unprotected slopes.

An earth dike does not itself control erosion or remove sediment from runoff. A dike prevents erosion by directing runoff to an erosion control device such as a sediment trap or directing runoff away from an erodible area. Temporary diversion dikes should not adversely impact adjacent properties and must conform to local floodplain management regulations, and should not be used in areas with slopes steeper than 10%.

Slopes that are formed during cut and fill operations should be protected from erosion by runoff. A combination of a temporary drainage swale and an earth dike at the top of a slope can divert

runoff to a location where it can be brought to the bottom of the slope (see EC-11, Slope Drains). A combination dike and swale is easily constructed by a single pass of a bulldozer or grader and compacted by a second pass of the tracks or wheels over the ridge. Diversion structures should be installed when the site is initially graded and remain in place until post construction BMPs are installed and the slopes are stabilized.

Diversion practices concentrate surface runoff, increasing its velocity and erosive force. Thus, the flow out of the drain or swale must be directed onto a stabilized area or into a grade stabilization structure. If significant erosion will occur, a swale should be stabilized using vegetation, chemical treatment, rock rip-rap, matting, or other physical means of stabilization. Any drain or swale that conveys sediment laden runoff must be diverted into a sediment basin or trap before it is discharged from the site.

General

- Care must be applied to correctly size and locate earth dikes, drainage swales. Excessively steep, unlined dikes, and swales are subject to erosion and gully formation.
- Conveyances should be stabilized.
- Use a lined ditch for high flow velocities.
- Select flow velocity based on careful evaluation of the risks due to erosion of the measure, soil types, overtopping, flow backups, washout, and drainage flow patterns for each project site.
- Compact any fills to prevent unequal settlement.
- Do not divert runoff onto other property without securing written authorization from the property owner.
- When possible, install and utilize permanent dikes, swales, and ditches early in the construction process.
- Provide stabilized outlets.

Earth Dikes

Temporary earth dikes are a practical, inexpensive BMP used to divert stormwater runoff. Temporary diversion dikes should be installed in the following manner:

- All dikes should be compacted by earth moving equipment.
- All dikes should have positive drainage to an outlet.
- All dikes should have 2:1 or flatter side slopes, 18 in. minimum height, and a minimum top width of 24 in. Wide top widths and flat slopes are usually needed at crossings for construction traffic.
- The outlet from the earth dike must function with a minimum of erosion. Runoff should be conveyed to a sediment trapping device such as a Sediment Trap (SE-3) or Sediment Basin

(SE-2) when either the dike channel or the drainage area above the dike are not adequately stabilized.

- Temporary stabilization may be achieved using seed and mulching for slopes less than 5% and either rip-rap or sod for slopes in excess of 5%. In either case, stabilization of the earth dike should be completed immediately after construction or prior to the first rain.
- If riprap is used to stabilize the channel formed along the toe of the dike, the following typical specifications apply:

Channel Grade	Riprap Stabilization
0.5-1.0%	4 in. Rock
1.1-2.0%	6 in. Rock
2.1-4.0%	8 in. Rock
4.1-5.0%	8 in. -12 in. Riprap

- The stone riprap, recycled concrete, etc. used for stabilization should be pressed into the soil with construction equipment.
- Filter cloth may be used to cover dikes in use for long periods.
- Construction activity on the earth dike should be kept to a minimum.

Drainage Swales

Drainage swales are only effective if they are properly installed. Swales are more effective than dikes because they tend to be more stable. The combination of a swale with a dike on the downhill side is the most cost effective diversion.

Standard engineering design criteria for small open channel and closed conveyance systems should be used (see the local drainage design manual). Unless local drainage design criteria state otherwise, drainage swales should be designed as follows:

- No more than 5 acres may drain to a temporary drainage swale.
- Place drainage swales above or below, not on, a cut or fill slope.
- Swale bottom width should be at least 2 ft
- Depth of the swale should be at least 18 in.
- Side slopes should be 2:1 or flatter.
- Drainage or swales should be laid at a grade of at least 1 percent, but not more than 15 percent.
- The swale must not be overtopped by the peak discharge from a 10-year storm, irrespective of the design criteria stated above.

- Remove all trees, stumps, obstructions, and other objectionable material from the swale when it is built.
- Compact any fill material along the path of the swale.
- Stabilize all swales immediately. Seed and mulch swales at a slope of less than 5 percent, and use rip-rap or sod for swales with a slope between 5 and 15 percent. For temporary swales, geotextiles and mats (EC-7) may provide immediate stabilization.
- Irrigation may be required to establish sufficient vegetation to prevent erosion.
- Do not operate construction vehicles across a swale unless a stabilized crossing is provided.
- Permanent drainage facilities must be designed by a professional engineer (see the local drainage design criteria for proper design).
- At a minimum, the drainage swale should conform to predevelopment drainage patterns and capacities.
- Construct the drainage swale with a positive grade to a stabilized outlet.
- Provide erosion protection or energy dissipation measures if the flow out of the drainage swale can reach an erosive velocity.

Costs

- Cost ranges from $15 to $55 per ft for both earthwork and stabilization and depends on availability of material, site location, and access.
- Small dikes: $2.50 - $6.50/linear ft; Large dikes: $2.50/yd^3.
- The cost of a drainage swale increases with drainage area and slope. Typical swales for controlling internal erosion are inexpensive, as they are quickly formed during routine earthwork.

Inspection and Maintenance

- Inspect BMPs prior to forecast rain, daily during extended rain events, after rain events, weekly during the rainy season, and at two-week intervals during the non-rainy season.
- Inspect BMPs subject to non-stormwater discharges daily while non-stormwater discharges occur.
- Inspect ditches and berms for washouts. Replace lost riprap, damaged linings or soil stabilizers as needed.
- Inspect channel linings, embankments, and beds of ditches and berms for erosion and accumulation of debris and sediment. Remove debris and sediment and repair linings and embankments as needed.
- Temporary conveyances should be completely removed as soon as the surrounding drainage area has been stabilized or at the completion of construction

References

Erosion and Sediment Control Handbook, S.J. Goldman, K. Jackson, T.A. Bursetynsky, P.E., McGraw Hill Book Company, 1986.

Manual of Standards of Erosion and Sediment Control Measures, Association of Bay Area Governments, May 1995.

Metzger, M.E. 2004. Managing mosquitoes in stormwater treatment devices. University of California Division of Agriculture and Natural Resources, Publication 8125. On-line: http://anrcatalog.ucdavis.edu/pdf/8125.pdf

National Association of Home Builders (NAHB). Stormwater Runoff & Nonpoint Source Pollution Control Guide for Builders and Developers. National Association of Home Builders, Washington, D.C., 1995

National Management Measures to Control Nonpoint Source Pollution from Urban Areas, United States Environmental Protection Agency, 2002.

Southeastern Wisconsin Regional Planning Commission (SWRPC). Costs of Urban Nonpoint Source Water Pollution Control Measures. Technical Report No. 31. Southeastern Wisconsin Regional Planning Commission, Waukesha, WI. 1991

Stormwater Quality Handbooks Construction Site Best Management Practices (BMPs) Manual, State of California Department of Transportation (Caltrans), November 2000.

Stormwater Management of the Puget Sound Basin, Technical Manual, Publication #91-75, Washington State Department of Ecology, February 1992.

Water Quality Management Plan for the Lake Tahoe Region, Volume II, Handbook of Management Practices, Tahoe Regional Planning Agency, November 1988.

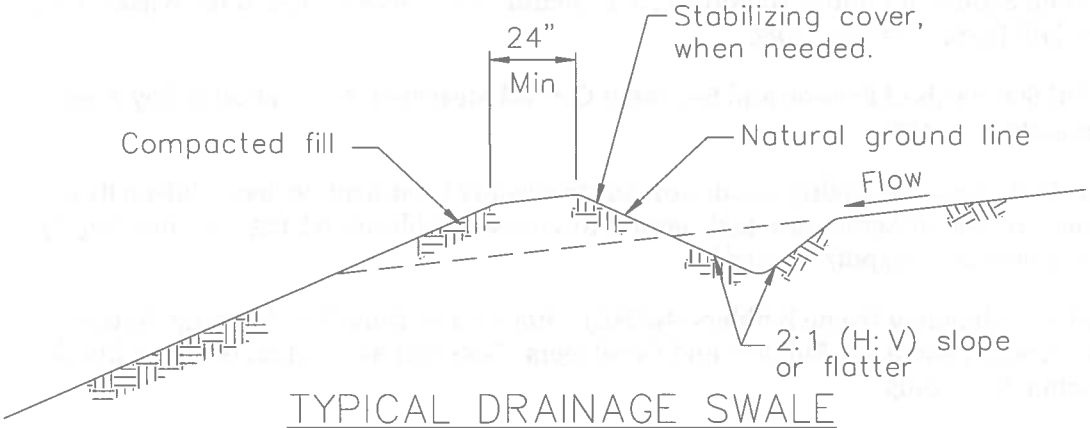

TYPICAL DRAINAGE SWALE
NOT TO SCALE

NOTES:

1. Stabilize inlet, outlets and slopes.
2. Properly compact the subgrade.

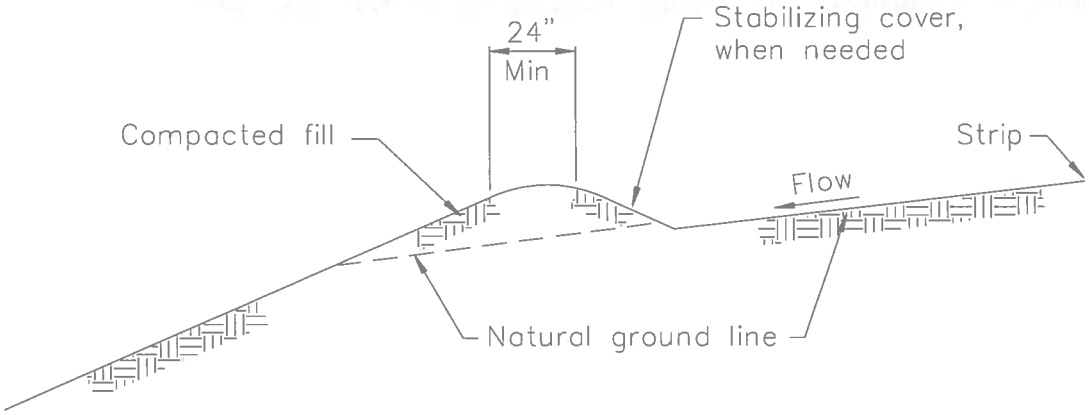

TYPICAL EARTH DIKE
NOT TO SCALE

Velocity Dissipation Devices EC-10

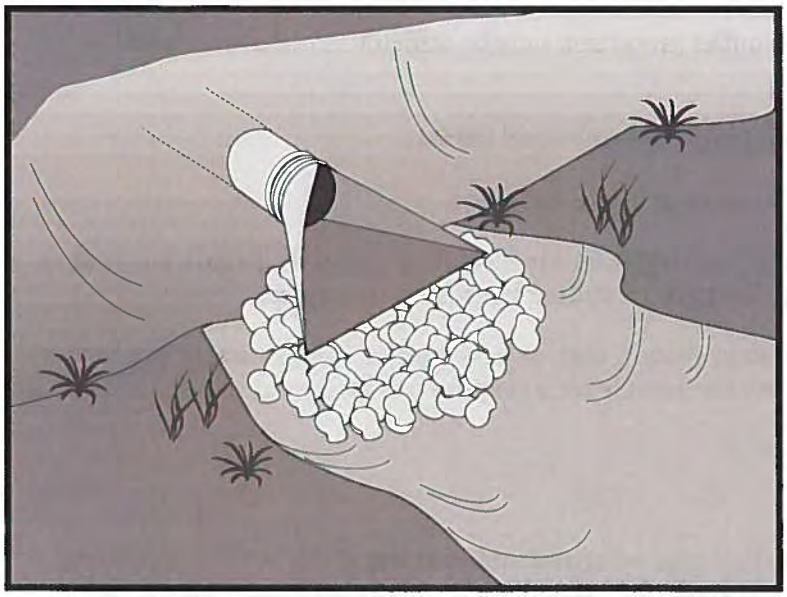

Categories

EC	Erosion Control	☑
SE	Sediment Control	
TC	Tracking Control	
WE	Wind Erosion Control	
NS	Non-Stormwater Management Control	
WM	Waste Management and Materials Pollution Control	

Legend:

☑ **Primary Objective**

☒ **Secondary Objective**

Targeted Constituents

Sediment	☑
Nutrients	
Trash	
Metals	
Bacteria	
Oil and Grease	
Organics	

Potential Alternatives

None

Description and Purpose

Outlet protection is a physical device composed of rock, grouted riprap, or concrete rubble, which is placed at the outlet of a pipe or channel to prevent scour of the soil caused by concentrated, high velocity flows.

Suitable Applications

Whenever discharge velocities and energies at the outlets of culverts, conduits, or channels are sufficient to erode the next downstream reach. This includes temporary diversion structures to divert runon during construction.

- These devices may be used at the following locations:
  - Outlets of pipes, drains, culverts, slope drains, diversion ditches, swales, conduits, or channels.
  - Outlets located at the bottom of mild to steep slopes.
  - Discharge outlets that carry continuous flows of water.
  - Outlets subject to short, intense flows of water, such as flash floods.
  - Points where lined conveyances discharge to unlined conveyances

Limitations

- Large storms or high flows can wash away the rock outlet protection and leave the area susceptible to erosion.

- Sediment captured by the rock outlet protection may be difficult to remove without removing the rock.
- Outlet protection may negatively impact the channel habitat.
- Grouted riprap may break up in areas of freeze and thaw.
- If there is not adequate drainage, and water builds up behind grouted riprap, it may cause the grouted riprap to break up due to the resulting hydrostatic pressure.
- Sediment accumulation, scour depressions, and/or persistent non-stormwater discharges can result in areas of standing water suitable for mosquito production in velocity dissipation devices.

Implementation

General

Outlet protection is needed where discharge velocities and energies at the outlets of culverts, conduits or channels are sufficient to erode the immediate downstream reach. This practice protects the outlet from developing small eroded pools (plange pools), and protects against gully erosion resulting from scouring at a culvert mouth.

Design and Layout

As with most channel design projects, depth of flow, roughness, gradient, side slopes, discharge rate, and velocity should be considered in the outlet design. Compliance to local and state regulations should also be considered while working in environmentally sensitive streambeds. General recommendations for rock size and length of outlet protection mat are shown in the rock outlet protection figure in this BMP and should be considered minimums. The apron length and rock size gradation are determined using a combination of the discharge pipe diameter and estimate discharge rate: Select the longest apron length and largest rock size suggested by the pipe size and discharge rate. Where flows are conveyed in open channels such as ditches and swales, use the estimated discharge rate for selecting the apron length and rock size. Flows should be same as the culvert or channel design flow but never the less than the peak 5 year flow for temporary structures planned for one rainy season, or the 10 year peak flow for temporary structures planned for two or three rainy seasons.

- There are many types of energy dissipaters, with rock being the one that is represented in the attached figure.
- Best results are obtained when sound, durable, and angular rock is used.
- Install riprap, grouted riprap, or concrete apron at selected outlet. Riprap aprons are best suited for temporary use during construction. Grouted or wired tied rock riprap can minimize maintenance requirements.
- Rock outlet protection is usually less expensive and easier to install than concrete aprons or energy dissipaters. It also serves to trap sediment and reduce flow velocities.
- Carefully place riprap to avoid damaging the filter fabric.

- Stone 4 in. to 6 in. may be carefully dumped onto filter fabric from a height not to exceed 12 in.
- Stone 8 in. to 12 in. must be hand placed onto filter fabric, or the filter fabric may be covered with 4 in. of gravel and the 8 in. to 12 in. rock may be dumped from a height not to exceed 16 in.
- Stone greater than 12 in. shall only be dumped onto filter fabric protected with a layer of gravel with a thickness equal to one half the D_{50} rock size, and the dump height limited to twice the depth of the gravel protection layer thickness.

- For proper operation of apron: Align apron with receiving stream and keep straight throughout its length. If a curve is needed to fit site conditions, place it in upper section of apron.
- Outlets on slopes steeper than 10 percent should have additional protection.

Costs

Costs are low if material is readily available. If material is imported, costs will be higher. Average installed cost is $150 per device.

Inspection and Maintenance

- Inspect BMPs prior to forecast rain, daily during extended rain events, after rain events, weekly during the rainy season, and at two-week intervals during the non-rainy season.
- Inspect BMPs subjected to non-stormwater discharges daily while non-stormwater discharges occur. Minimize areas of standing water by removing sediment blockages and filling scour depressions.
- Inspect apron for displacement of the riprap and damage to the underlying fabric. Repair fabric and replace riprap that has washed away. If riprap continues to wash away, consider using larger material.
- Inspect for scour beneath the riprap and around the outlet. Repair damage to slopes or underlying filter fabric immediately.
- Temporary devices should be completely removed as soon as the surrounding drainage area has been stabilized or at the completion of construction.

References

County of Sacramento Improvement Standards, Sacramento County, May 1989.

Erosion and Sediment Control Handbook, S.J. Goldman, K. Jackson, T.A. Bursztynsky, P.E., McGraw Hill Book Company, 1986.

Handbook of Steel Drainage & Highway Construction, American Iron and Steel Institute, 1983.

Manual of Standards of Erosion and Sediment Control Measures, Association of Bay Area Governments, May 1995.

Metzger, M.E. 2004. Managing mosquitoes in stormwater treatment devices. University of California Division of Agriculture and Natural Resources, Publication 8125. On-line: http://anrcatalog.ucdavis.edu/pdf/8125.pdf

Stormwater Quality Handbooks Construction Site Best Management Practices (BMPs) Manual, state of California Department of Transportation (Caltrans), November 2000.

Stormwater Management of the Puget Sound Basin, Technical Manual, Publication #91-75, Washington State Department of Ecology, February 1992.

Water Quality Management Plan for the Lake Tahoe Region, Volume II, Handbook of Management Practices, Tahoe Regional Planning Agency, November 1988.

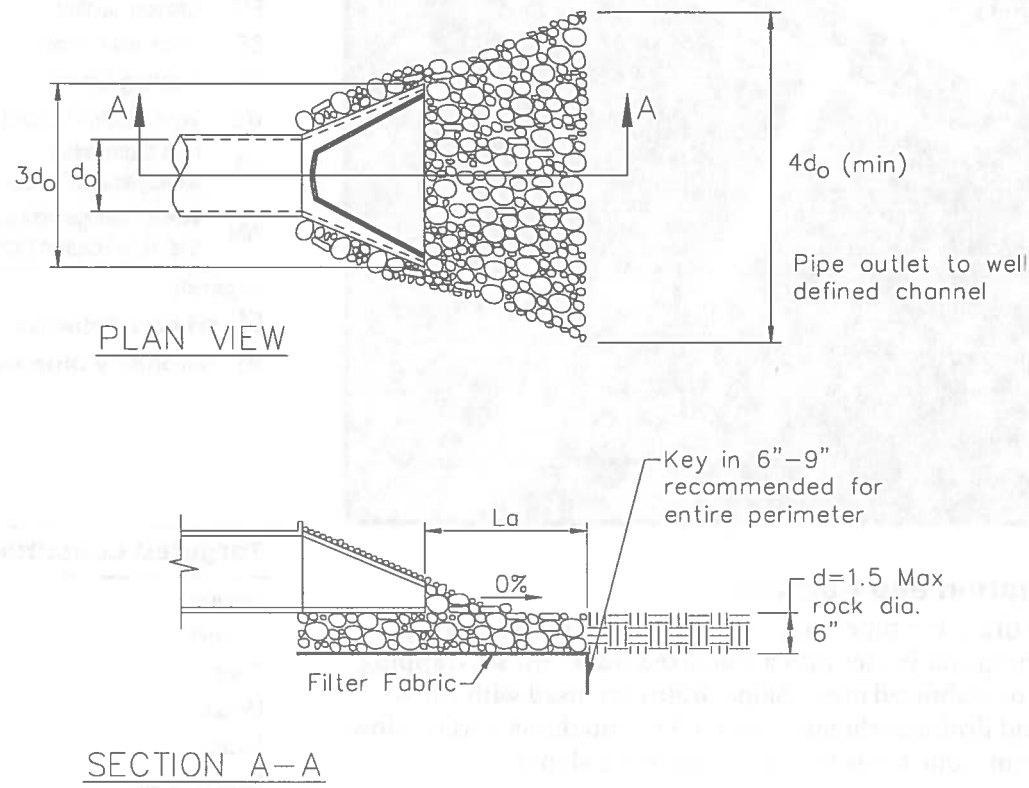

Pipe Diameter inches	Discharge ft^3/s	Apron Length, La ft	Rip Rap D_{50} Diameter Min inches
12	5	10	4
	10	13	6
18	10	10	6
	20	16	8
	30	23	12
	40	26	16
24	30	16	8
	40	26	8
	50	26	12
	60	30	16

For larger or higher flows consult a Registered Civil Engineer
Source: USDA - SCS

Slope Drains EC-11

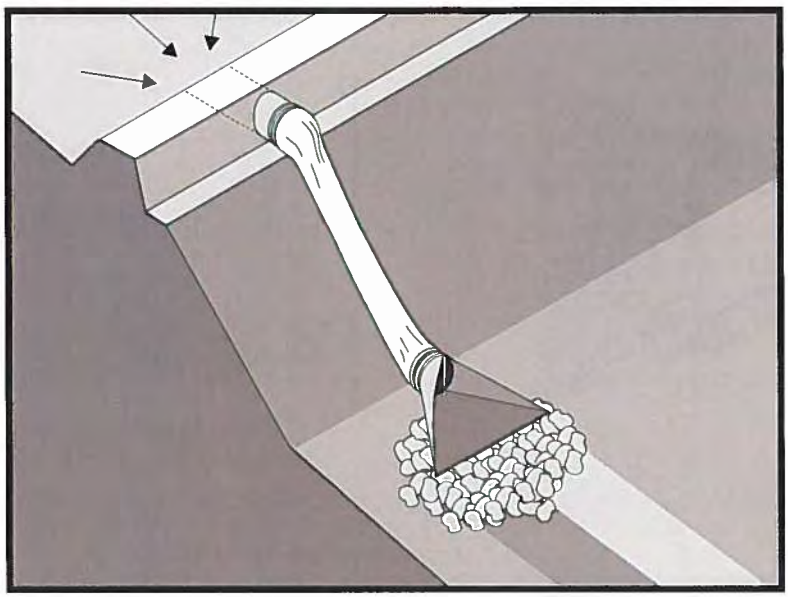

Categories

EC	Erosion Control	☑
SE	Sediment Control	
TC	Tracking Control	
WE	Wind Erosion Control	
NS	Non-Stormwater Management Control	
WM	Waste Management and Materials Pollution Control	

Legend:

☑ **Primary Objective**

☒ **Secondary Objective**

Targeted Constituents

Sediment	☑
Nutrients	
Trash	
Metals	
Bacteria	
Oil and Grease	
Organics	

Potential Alternatives

EC-9 Earth Dike, Drainage Swales

Description and Purpose

A slope drain is a pipe used to intercept and direct surface runoff or groundwater into a stabilized watercourse, trapping device, or stabilized area. Slope drains are used with earth dikes and drainage ditches to intercept and direct surface flow away from slope areas to protect cut or fill slopes.

Suitable Applications

- Where concentrated flow of surface runoff must be conveyed down a slope in order to prevent erosion.
- Drainage for top of slope diversion dikes or swales.
- Drainage for top of cut and fill slopes where water can accumulate.
- Emergency spillway for a sediment basin.

Limitations

Installation is critical for effective use of the pipe slope drain to minimize potential gully erosion.

- Maximum drainage area per slope drain is 10 acres. (For large areas use a paved chute, rock lined channel, or additional pipes.)
- Severe erosion may result when slope drains fail by overtopping, piping, or pipe separation.
  - During large storms, pipe slope drains may become clogged or over charged, forcing water around the pipe

and causing extreme slope erosion.

- If the sectional downdrain is not sized correctly, the runoff can spill over the drain sides causing gully erosion and potential failure of the structure.

- Dissipation of high flow velocities at the pipe outlet is required to avoid downstream erosion.
- Sediment accumulation, scour depressions, and/or persistent non-stormwater discharges can result in areas of standing water suitable for mosquito production in energy dissipaters associated with slope drain outlets.

Implementation

General

The slope drain is applicable for any construction site where concentrated surface runoff can accumulate and must be conveyed down the slope in order to prevent erosion. The slope drain is effective because it prevents the stormwater from flowing directly down the slope by confining all the runoff into an enclosed pipe or channel. Due to the time lag between grading slopes and installation of permanent stormwater collection systems and slope stabilization measures, temporary provisions to intercept runoff are sometimes necessary. Particularly in steep terrain, slope drains can protect unstabilized areas from erosion.

Installation

The slope drain may be a rigid pipe, such as corrugated metal, a flexible conduit, or a lined terrace drain with the inlet placed on the top of a slope and the outlet at the bottom of the slope. This BMP typically is used in combination with a diversion control, such as an earth dike or drainage swale at the top of the slope.

The following criteria must be considered when siting slope drains.

- Permanent structures included in the project plans can often serve as construction BMPs if implemented early. However, the permanent structure must meet or exceed the criteria for the temporary structure.
- Inlet structures must be securely entrenched and compacted to avoid severe gully erosion.
- Slope drains must be securely anchored to the slope and must be adequately sized to carry the capacity of the design storm and associated forces.
- Outlets must be stabilized with riprap, concrete or other type of energy dissipator, or directed into a stable sediment trap or basin. See EC-10, Velocity Dissipation Devices.
- Debris racks are recommended at the inlet. Debris racks located several feet upstream of the inlet can usually be larger than racks at the inlet, and thus provide enhanced debris protection and less plugging.
- Safety racks are also recommended at the inlet and outlet of pipes where children or animals could become entrapped.
- Secure inlet and surround with dikes to prevent gully erosion and anchor pipe to slope.

- When using slope drains, limit drainage area to 10 acres per pipe. For larger areas, use a rock lined channel or a series of pipes.
- Size to convey at least the peak flow of a 10-year storm. The design storm is conservative due to the potential impact of system failures.
- Maximum slope generally limited to 2:1 (H:V) as energy dissipation below steeper slopes is difficult.
- Direct surface runoff to slope drains with interceptor dikes. See BMP EC-9, Earth Dikes and Drainage Swales. Top of interceptor dikes should be 12 in. higher than the top of the slope drain.
- Slope drains can be placed on or buried underneath the slope surface.
- Recommended materials include both metal and plastic pipe, either corrugated or smooth wall. Concrete pipe can also be used.
- When installing slope drains:
  - Install slope drains perpendicular to slope contours.
  - Compact soil around and under entrance, outlet, and along length of pipe.
  - Securely anchor and stabilize pipe and appurtenances into soil.
  - Check to ensure that pipe connections are watertight.
  - Protect area around inlet with filter cloth. Protect outlet with riprap or other energy dissipation device. For high energy discharges, reinforce riprap with concrete or use reinforced concrete device.
  - Protect outlet of slope drains using a flared end section when outlet discharges to a flexible energy dissipation device.
  - A flared end section installed at the inlet will improve flow into the slope drain and prevent erosion at the pipe entrance. Use a flared end section with a 6 in. minimum toe plate to help prevent undercutting. The flared section should slope towards the pipe inlet.

Design and Layout

The capacity for temporary drains should be sufficient to convey at least the peak runoff from a 10-year rainfall event. The pipe size may be computed using the Rational Method or a method established by the local municipality. Higher flows must be safely stored or routed to prevent any offsite concentration of flow and any erosion of the slope. The design storm is purposely conservative due to the potential impacts associated with system failures.

As a guide, temporary pipe slope drains should not be sized smaller than shown in the following table:

Minimum Pipe Diameter (Inches)	Maximum Drainage Area (Acres)
12	1.0
18	3.0
21	5.0
24	7.0
30	10.0

Larger drainage areas can be treated if the area can be subdivided into areas of 10 acres or less and each area is treated as a separate drainage. Drainage areas exceeding 10 acres must be designed by a Registered Civil Engineer and approved by the agency that issued the grading permit.

Materials:

Soil type, rainfall patterns, construction schedule, local requirements, and available supply are some of the factors to be considered when selecting materials. The following types of slope drains are commonly used:

- **Rigid Pipe:** This type of slope drain is also known as a pipe drop. The pipe usually consists of corrugated metal pipe or rigid plastic pipe. The pipe is placed on undisturbed or compacted soil and secured onto the slope surface or buried in a trench. Concrete thrust blocks must be used when warranted by the calculated thrust forces. Collars should be properly installed and secured with metal strappings or watertight collars.

- **Flexible Pipe**: The flexible pipe slope drain consists of a flexible tube of heavy duty plastic, rubber, or composite material. The tube material is securely anchored onto the slope surface. The tube should be securely fastened to the metal inlet and outlet conduit sections with metal strappings or watertight collars.

- **Section Downdrains**: The section downdrain consists of pre-fabricated, section conduit of half round or third round material. The sectional downdrain performs similar to a flume or chute. The pipe must be placed on undisturbed or compacted soil and secured into the slope.

- **Concrete-lined Terrace Drain:** This is a concrete channel for draining water from a terrace on a slope to the next level. These drains are typically specified as permanent structures and if installed early, can serve as slope drains during construction, which should be designed according to local drainage design criteria.

Costs

- Cost varies based on pipe selection and selected outlet protection.

Corrugated Steel Pipes, Per Foot	
Size	Supplied and Installed Cost (No Trenching Included)
12"	$19.60 per LF
15"	$22.00
18"	$26.00
24"	$32.00
30"	$50.00
PVC Pipes, Per Foot	
Size	Supplied and Installed Cost (No Trenching Included)
12"	$24.50
14"	$49.00
16"	$51.00
18"	$54.00
20"	$66.00
24"	$93.00
30"	$130.00

Inspection and Maintenance

- Inspect BMPs prior to forecast rain, daily during extended rain events, after rain events, weekly during the rainy season, and at two-week intervals during the non-rainy season.
- Inspect BMPs subjected to non-stormwater discharges daily while non-stormwater discharges occur. Minimize areas of standing water by removing sediment blockages and filling scour depressions.
- Inspect outlet for erosion and downstream scour. If eroded, repair damage and install additional energy dissipation measures. If downstream scour is occurring, it may be necessary to reduce flows being discharged into the channel unless other preventative measures are implemented.
- Insert inlet for clogging or undercutting. Remove debris from inlet to maintain flows. Repair undercutting at inlet and if needed, install flared section or rip rap around the inlet to prevent further undercutting.
- Inspect pipes for leakage. Repair leaks and restore damaged slopes.
- Inspect slope drainage for accumulations of debris and sediment.

- Remove built up sediment from entrances and outlets as required. Flush drains if necessary; capture and settle out sediment from discharge.
- Make sure water is not ponding onto inappropriate areas (e.g., active traffic lanes, material storage areas, etc.).
- Pipe anchors must be checked to ensure that the pipe remains anchored to the slope. Install additional anchors if pipe movement is detected.

References

Draft – Sedimentation and Erosion Control, An Inventory of Current Practices, U.S.E.P.A., April 1990.

Metzger, M.E. 2004. Managing mosquitoes in stormwater treatment devices. University of California Division of Agriculture and Natural Resources, Publication 8125. On-line: http://anrcatalog.ucdavis.edu/pdf/8125.pdf

National Association of Home Builders (NAHB). Stormwater Runoff & Nonpoint Source Pollution Control Guide for Builders and Developers. National Association of Home Builders, Washington, D.C., 1995

National Management Measures to Control Nonpoint Source Pollution from Urban Areas, United States Environmental Protection Agency, 2002.

Stormwater Quality Handbooks Construction Site Best Management Practices (BMPs) Manual, State of California Department of Transportation (Caltrans), November 2000.

Stormwater Management of the Puget Sound Basin, Technical Manual, Publication #91-75, Washington State Department of Ecology, February 1992.

Water Quality Management Plan for the Lake Tahoe Region, Volume II, Handbook of Management Practices, Tahoe Regional Planning Agency, November 1988.

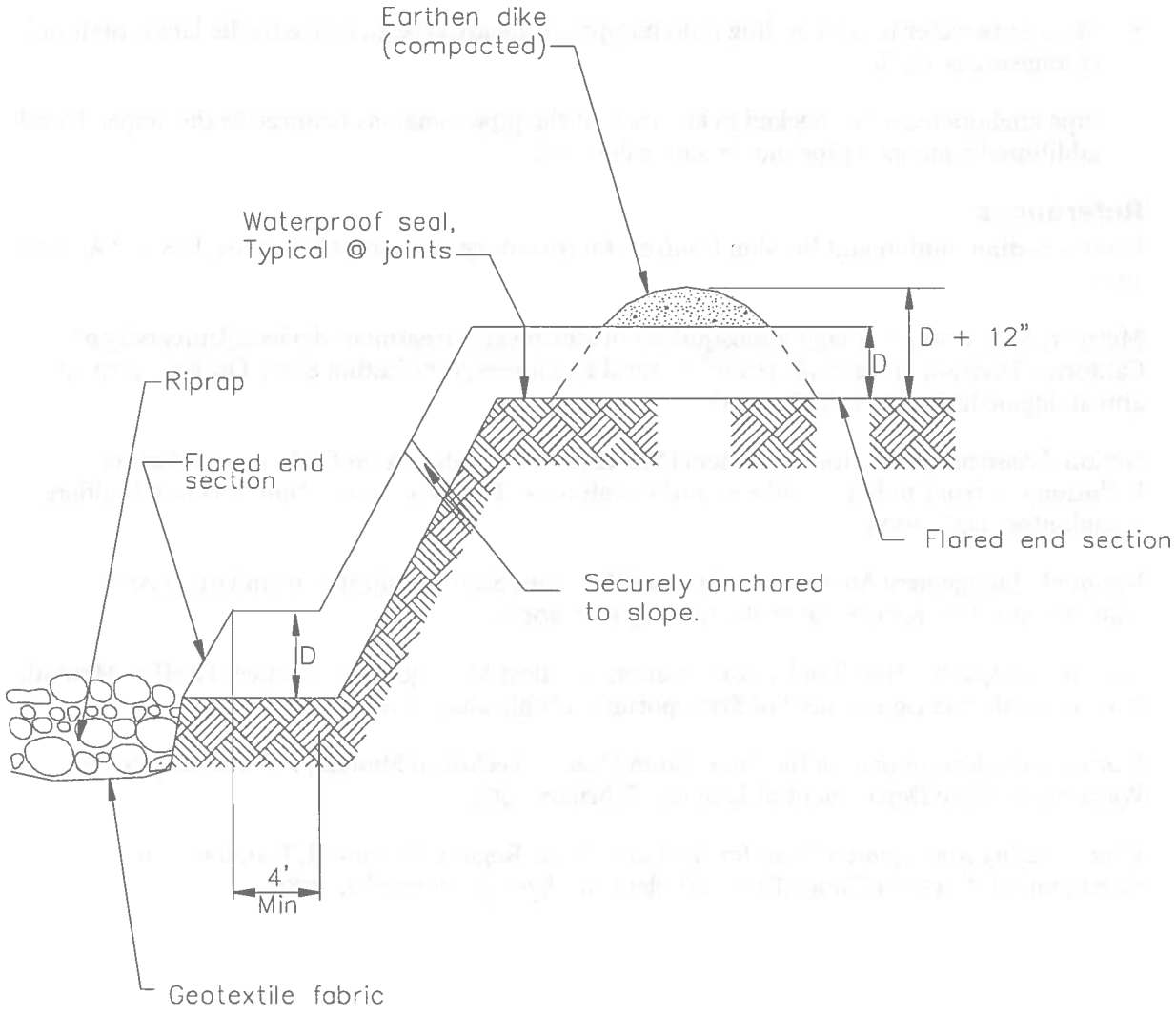

TYPICAL SLOPE DRAIN
NOT TO SCALE

Streambank Stabilization EC-12

Categories

EC	Erosion Control	☑
SE	Sediment Control	☒
TC	Tracking Control	
WE	Wind Erosion Control	
NS	Non-Stormwater Management Control	☒
WM	Waste Management and Materials Pollution Control	

Legend:

☑ **Primary Objective**

☒ **Secondary Objective**

Targeted Constituents

Sediment	☑
Nutrients	
Trash	
Metals	
Bacteria	
Oil and Grease	
Organics	

Potential Alternatives

Combination of erosion and sediment controls.

Description and Purpose

Stream channels, streambanks, and associated riparian areas are dynamic and sensitive ecosystems that respond to changes in land use activity. Streambank and channel disturbance resulting from construction activities can increase the stream's sediment load, which can cause channel erosion or sedimentation and have adverse affects on the biotic system. BMPs can reduce the discharge of sediment and other pollutants to minimize the impact of construction activities on watercourses. Streams on the 303(d) list and listed for sediment may require numerous measures to prevent any increases in sediment load to the stream.

Suitable Applications

These procedures typically apply to all construction projects that disturb or occur within stream channels and their associated riparian areas.

Limitations

Specific permit requirements or mitigation measures such as Regional Water Quality Control Board (RWQCB) 401 Certification, U.S. Army Corps of Engineers 404 permit and approval by California Department of Fish and Game supercede the guidance in this BMP.

- If numerical based water quality standards are mentioned in any of these and other related permits, testing and sampling may be required. Streams listed as 303(d) impaired for sediment, silt, or turbidity, are required to

conduct sampling to verify that there is no net increase in sediment load due to construction activities.

Implementation

Planning

- Proper planning, design, and construction techniques can minimize impacts normally associated with in stream construction activities. Poor planning can adversely affect soil, fish, wildlife resources, land uses, or land users. Planning should take into account: scheduling; avoidance of in-stream construction; minimizing disturbance area and construction time period; using pre-disturbed areas; selecting crossing location; and selecting equipment.

Scheduling

- Construction activities should be scheduled according to the relative sensitivity of the environmental concerns and in accordance with EC-1, Scheduling. Scheduling considerations will be different when working near perennial streams vs. ephemeral streams and are as follows.

- When in-stream construction is conducted in a perennial stream, work should optimally be performed during the rainy season. This is because in the summer, any sediment-containing water that is discharged into the watercourse will cause a large change in both water clarity and water chemistry. During the rainy season, there is typically more and faster flowing water in the stream so discharges are diluted faster. However, should in-stream work be scheduled for summer, establishing an isolation area, or diverting the stream, will significantly decrease the amount of sediment stirred up by construction work. Construction work near perennial streams should optimally be performed during the dry season (see below).

- When working in or near ephemeral streams, work should be performed during the dry season. By their very nature, ephemeral streams are usually dry in the summer, and therefore, in-stream construction activities will not cause significant water quality problems. However, when tying up the site at the end of the project, wash any fines (see Washing Fines) that accumulated in the channel back into the bed material, to decrease pollution from the first rainstorm of the season.

- When working near ephemeral or perennial streams, erosion and sediment controls (see silt fences, straw bale barriers, etc.) should be implemented to keep sediment out of stream channel.

Minimize Disturbance

- Minimize disturbance through: selection of the narrowest crossing location; limiting the number of equipment trips across a stream during construction; and, minimizing the number and size of work areas (equipment staging areas and spoil storage areas). Place work areas at least 50 ft from stream channel. Field reconnaissance should be conducted during the planning stage to identify work areas.

Use of Pre-Disturbed Areas

- Locate project sites and work areas in areas disturbed by prior construction or other activity when possible.

Selection of Project Site

- Avoid steep and unstable banks, highly erodible or saturated soils, or highly fractured rock.
- Select project site that minimizes disturbance to aquatic species or habitat.

Equipment Selection

- Select equipment that reduces the amount of pressure exerted on the ground surface, and therefore, reduces erosion potential and/or use overhead or aerial access for transporting equipment across drainage channels. Use equipment that exerts ground pressures of less than 5 or 6 lb/in^2, where possible. Low ground pressure equipment includes: wide or high flotation tires (34 to 72 in. wide); dual tires; bogie axle systems; tracked machines; lightweight equipment; and, central tire inflation systems.

Streambank Stabilization

Preservation of Existing Vegetation

- Preserve existing vegetation in accordance with EC-2, Preservation of Existing Vegetation. In a streambank environment, preservation of existing vegetation provides the following benefits.

Water Quality Protection

- Vegetated buffers on slopes trap sediment and promote groundwater recharge. The buffer width needed to maintain water quality ranges from 15 to 100 ft. On gradual slopes, most of the filtering occurs within the first 30 ft. Steeper slopes require a greater width of vegetative buffer to provide water quality benefits.

Streambank Stabilization

- The root system of riparian vegetation stabilizes streambanks by increasing tensile strength in the soil. The presence of vegetation modifies the moisture condition of slopes (infiltration, evapo transpiration, interception) and increases bank stability.

Riparian Habitat

- Buffers of diverse riparian vegetation provide food and shelter for riparian and aquatic organisms. Minimizing impacts to fisheries habitat is a major concern when working near streams and rivers. Riparian vegetation provides shade, shelter, organic matter (leaf detritus and large woody debris), and other nutrients that are necessary for fish and other aquatic organisms. Buffer widths for habitat concerns are typically wider than those recommended for water quality concerns (100 to 1500 ft).
- When working near watercourses, it is important to understand the work site's placement in the watershed. Riparian vegetation in headwater streams has a greater impact on overall water quality than vegetation in downstream reaches. Preserving existing vegetation upstream is necessary to maintain water quality, minimize bank failure, and maximize riparian habitat, downstream of the work site.

Limitations

- Local county and municipal ordinances regarding width, extent and type of vegetative buffer required may exceed the specifications provided here; these ordinances should be investigated prior to construction.

Streambank Stabilization Specific Installation

- As a general rule, the width of a buffer strip between a road and the stream is recommended to be 50 ft plus four times the percent slope of the land, measured between the road and the top of stream bank.

Hydraulic Mulch

- Apply hydraulic mulch on disturbed streambanks above mean high water level in accordance with EC-3, Hydraulic Mulch to provide temporary soil stabilization.

Limitations

- Do not place hydraulic mulch or tackifiers below the mean high water level, as these materials could wash into the channel and impact water quality or possibly cause eutrophication (eutrophication is an algal bloom caused by excessively high nutrient levels in the water).

Hydroseeding

- Hydroseed disturbed streambanks in accordance with EC-4, Hydroseeding.

Limitations

- Do not place tackifiers or fertilizers below the mean high water level, as these materials could wash into the channel and impact water quality or possibly cause eutrophication.

Soil Binders

- Apply soil binders to disturbed streambanks in accordance with EC-5, Soil Binders.

Limitations

- Do not place soil binders below the mean high water level. Soil binder must be environmentally benign and non-toxic to aquatic organisms.

Straw Mulch

- Apply straw mulch to disturbed streambanks in accordance with EC-6, Straw Mulch.

Limitations

- Do not place straw mulch below the mean high water level, as this material could wash into the channel and impact water quality or possibly cause eutrophication.

Geotextiles and Mats

- Install geotextiles and mats as described in EC-7, Geotextiles and Mats, to stabilize disturbed channels and streambanks. Not all applications should be in the channel, for example, certain geotextile netting may snag fish gills and are not appropriate in fish bearing streams. Geotextile fabrics that are not biodegradable are not appropriate for in stream use. Additionally, geotextile fabric or blankets placed in channels must be adequate to sustain anticipated hydraulic forces.

Earth Dikes, Drainage Swales, and Lined Ditches

- Convey, intercept, or divert runoff from disturbed streambanks using EC-9, Earth Dikes and Drainage Swales.

Limitations

- Do not place earth dikes in watercourses, as these structures are only suited for intercepting sheet flow, and should not be used to intercept concentrated flow.

- Appropriately sized velocity dissipation devices (EC-10) must be placed at outlets to minimize erosion and scour.

Velocity Dissipation Devices

- Place velocity dissipation devices at outlets of pipes, drains, culverts, slope drains, diversion ditches, swales, conduits or channels in accordance with EC-10, Velocity Dissipation Devices.

Slope Drains

- Use slope drains to intercept and direct surface runoff or groundwater into a stabilized watercourse, trapping device or stabilized area in accordance with EC-11, Slope Drains.

Limitations

- Appropriately sized outlet protection and velocity dissipation devices (EC-10) must be placed at outlets to minimize erosion and scour.

Streambank Sediment Control

Silt Fences

- Install silt fences in accordance with SE-1, Silt Fence, to control sediment. Silt fences should only be installed where sediment laden water can pond, thus allowing the sediment to settle out.

Fiber Rolls

- Install fiber rolls in accordance with SE-5, Fiber Rolls, along contour of slopes above the high water level to intercept runoff, reduce flow velocity, release the runoff as sheet flow and provide removal of sediment from the runoff. In a stream environment, fiber rolls should be used in conjunction with other sediment control methods such as SE-1, Silt Fence or SE-9 Straw Bale Barrier. Install silt fence, straw bale barrier, or other erosion control method along toe of slope above the high water level.

Gravel Bag Berm

- A gravel bag berm or barrier can be utilized to intercept and slow the flow of sediment laden sheet flow runoff in accordance with SE-6, Gravel Bag Berm. In a stream environment gravel bag barriers can allow sediment to settle from runoff before water leaves the construction site and can be used to isolate the work area from the live stream.

Limitations

- Gravel bag barriers are not recommended as a perimeter sediment control practice around streams.

Straw Bale Barrier

- Install straw bale barriers in accordance with SE-9, Straw Bale Barrier, to control sediment. Straw bale barriers should only be installed where sediment laden water can pond, thus allowing the sediment to settle out. Install a silt fence in accordance with SE-1, Silt Fence,

on down slope side of straw bale barrier closest to stream channel to provide added sediment control.

Rock Filter

Description and Purpose

Rock filters are temporary erosion control barriers composed of rock that is anchored in place. Rock filters detain the sediment laden runoff, retain the sediment, and release the water as sheet flow at a reduced velocity. Typical rock filter installations are illustrated at the end of this BMP.

Applications

- Near the toe of slopes that may be subject to flow and rill erosion.

Limitations

- Inappropriate for contributing drainage areas greater than 5 acres.
- Requires sufficient space for ponded water.
- Ineffective for diverting runoff because filters allow water to slowly seep through.
- Rock filter berms are difficult to remove when construction is complete.
- Unsuitable in developed areas or locations where aesthetics is a concern.

Specifications

- Rock: open graded rock, 0.75 to 5 in. for concentrated flow applications.
- Woven wire sheathing: 1 in. diameter, hexagonal mesh, galvanized 20gauge (used with rock filters in areas of concentrated flow).
- In construction traffic areas, maximum rock berm heights should be 12 in. Berms should be constructed every 300 ft on slopes less than 5%, every 200 ft on slopes between 5% and 10%, and every 100 ft on slopes greater than 10%.

Maintenance

- Inspect and verify that activity-based BMPs are in place prior to the commencement of associated activities. While activities associated with the BMP are under way, inspect weekly during the rainy season and at two-week intervals in the non-rainy season to verify continued BMP implementation.
- Inspect BMPs subject to non-stormwater discharges daily while non-stormwater discharges occur.
- Reshape berms as needed and replace lost or dislodged rock, and filter fabric.
- Sediment that accumulates in the BMP must be periodically removed in order to maintain BMP effectiveness. Sediment should be removed when the sediment accumulation reaches one third of the barrier height. Sediment removed during maintenance may be incorporated into earthwork on the site or disposed at an appropriate location.

K-rail

Description and Purpose

This is temporary sediment control that uses K-rails to form the sediment deposition area, or to isolate the near bank construction area. Install K-rails at toe of slope in accordance with procedures described in NS-5, Clear Water Diversion.

Barriers are placed end to end in a pre-designed configuration and gravel filled bags are used at the toe of the barrier and at their abutting ends to seal and prevent movement of sediment beneath or through the barrier walls.

Appropriate Applications

- This technique is useful at the toe of embankments, cuts or fills slopes.

Limitations

- The K-rail method should not be used to dewater a project site, as the barrier is not watertight.

Implementation

- Refer to NS-5, Clear Water Diversion, for implementation requirements.

Instream Construction Sediment Control

There are three different options currently available for reducing turbidity while working in a stream or river. The stream can be isolated from the area in which work is occurring by means of a water barrier, the stream can be diverted around the work site through a pipe or temporary channel, or one can employ construction practices that minimize sediment suspension.

Whatever technique is implemented, an important thing to remember is that dilution can sometimes be the solution. A probable "worst time" to release high TSS into a stream system might be when the stream is very low; summer low flow, for example. During these times, the flow may be low while the biological activity in the stream is very high. Conversely, the addition of high TSS or sediment during a big storm discharge might have a relatively low impact, because the stream is already turbid, and the stream energy is capable of transporting both suspended solids, and large quantities of bedload through the system. The optimum time to "pull" in-stream structures may be during the rising limb of a storm hydrograph.

Techniques to minimize Total Suspended Solids (TSS)

- **Padding** - Padding laid in the stream below the work site may trap some solids that are deposited in the stream during construction. After work is done, the padding is removed from the stream, and placed on the bank to assist in re-vegetation.

- **Clean, washed gravel** - Using clean, washed gravel decreases solid suspension, as there are fewer small particles deposited in the stream.

- **Excavation using a large bucket** - Each time a bucket of soil is placed in the stream, a portion is suspended. Approximately the same amount is suspended whether a small amount of soil is placed in the stream, or a large amount. Therefore, using a large excavator bucket instead of a small one, will reduce the total amount of soil that washes downstream.

- **Use of dozer for backfilling** - Using a dozer for backfilling instead of a backhoe follows the same principles – the fewer times soil is deposited in the stream, the less soil will be suspended.
- **Partial dewatering with a pump** - Partially dewatering a stream with a pump reduces the amount of water, and thus the amount of water that can suspend sediment.

Washing Fines

Definition and Purpose

- Washing fines is an "in-channel" sediment control method, which uses water, either from a water truck or hydrant, to wash stream fines that were brought to the surface of the channel bed during restoration, back into the interstitial spaces of the gravel and cobbles.
- The purpose of this technique is to reduce or eliminate the discharge of sediment from the channel bottom during the first seasonal flow. Sediment should not be allowed into stream channels; however, occasionally in-channel restoration work will involve moving or otherwise disturbing fines (sand and silt sized particles) that are already in the stream, usually below bankfull discharge elevation. Subsequent re-watering of the channel can result in a plume of turbidity and sedimentation.
- This technique washes the fines back into the channel bed. Bedload materials, including gravel cobbles, boulders and those fines, are naturally mobilized during higher storm flows. This technique is intended to delay the discharge until the fines would naturally be mobilized.

Appropriate Applications

- This technique should be used when construction work is required in channels. It is especially useful in intermittent or ephemeral streams in which work is performed "in the dry", and which subsequently become re-watered.

Limitations

- The stream must have sufficient gravel and cobble substrate composition.
- The use of this technique requires consideration of time of year and timing of expected stream flows.
- The optimum time for the use of this technique is in the fall, prior to winter flows.
- Consultation with, and approval from the Department of Fish and Game and the Regional Water Quality Control Board may be required.

Implementation

- Apply sufficient water to wash fines, but not cause further erosion or runoff.
- Apply water slowly and evenly to prevent runoff and erosion.
- Consult with Department of Fish and Game and the Regional Water Quality Control Board for specific water quality requirements of applied water (e.g. chlorine).

Inspection and Maintenance

- None necessary

Costs

Cost may vary according to the combination of practices implemented.

Inspection and Maintenance

- Inspect and verify that activity-based BMPs are in place prior to the commencement of associated activities. While activities associated with the BMP are under way, inspect weekly during the rainy season and at two-week intervals in the non-rainy season to verify continued BMP implementation.
- Inspect BMPs subject to non-stormwater discharges daily while non-stormwater discharges occur.
- Inspect and repair equipment (for damaged hoses, fittings, and gaskets).

References

Manual of Standards of Erosion and Sediment Control Measures, Association of Bay Area Governments, May 1995.

Proposed Guidance Specifying Management Measures for Sources of Nonpoint Pollution in Coastal Waters, Work Group Working Paper, USEPA, April 1992.

Sedimentation and Erosion Control Practices, An Inventory of Current Practices (Draft), UESPA, 1990.

Stormwater Quality Handbooks Construction Site Best Management Practices (BMPs) Manual, State of California Department of Transportation (Caltrans), November 2000.

Stormwater Management for Construction Activities, Developing Pollution Prevention Plans and Best Management Practices, EPA 832-R-92005; USEPA, April 1992.

Water Quality Management Plan for the Lake Tahoe Region, Volume II, Handbook of Management Practices, Tahoe Regional Planning Agency, November 1988.

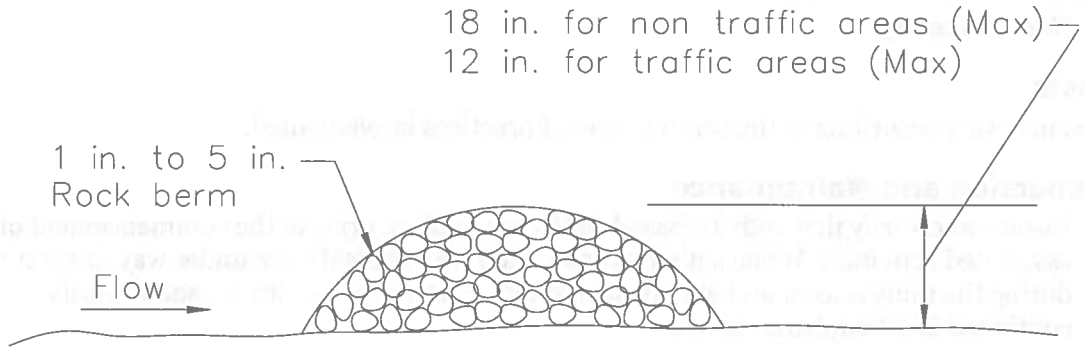

SECTION

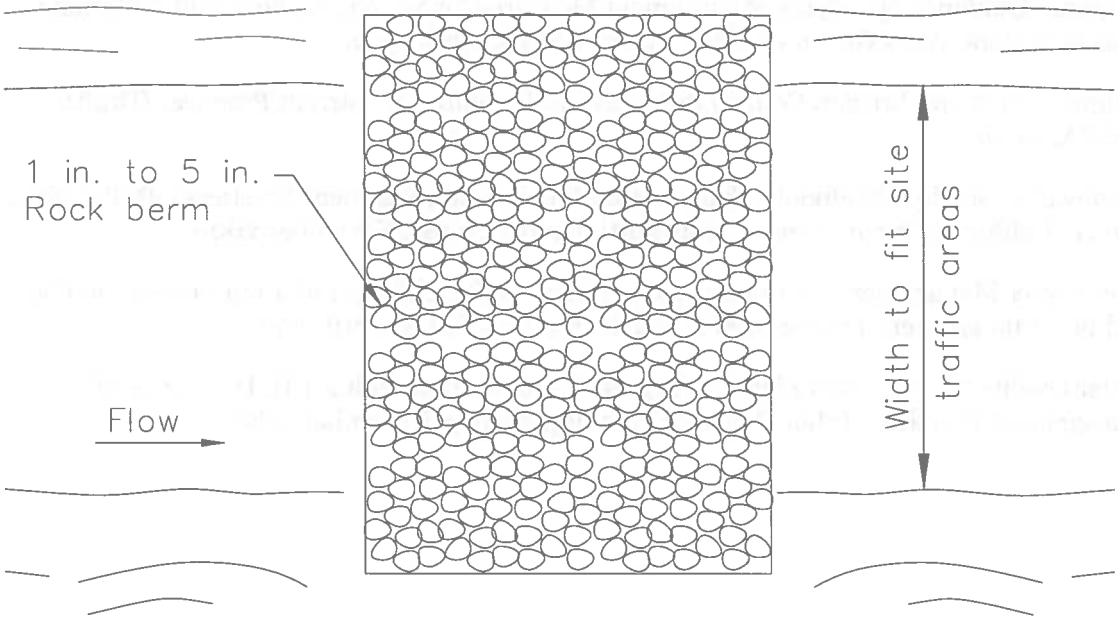

PLAN

TYPICAL ROCK FILTER

NOT TO SCALE

Reserved

EC-13

BMP Factsheet removed in 2009.
Formerly PAM. See SE-11, Active Treatment Systems.

Categories

EC	Erosion Control
SE	Sediment Control
TC	Tracking Control
WE	Wind Erosion Control
NS	Non-Stormwater Management Control
WM	Waste Management and Materials Pollution Control

Legend:

☑ **Primary Category**

☒ **Secondary Category**

Targeted Constituents

Sediment
Nutrients
Trash
Metals
Bacteria
Oil and Grease
Organics

Potential Alternatives

CASQA
CALIFORNIA STORMWATER QUALITY ASSOCIATION

Compost Blanket EC-14

Description and Purpose

A compost blanket is applied to slopes and earth disturbed areas to prevent erosion, and in some cases, increase infiltration and/or establish vegetation. The compost blanket can be applied by hand, conveyor system, compost spreader, or pneumatic delivery (blower) system. The blanket thickness is determined from the slope steepness and anticipated precipitation. A compost blanket protects the soil surface from raindrop erosion, particularly rills and gullies that may form under other methods of erosion control.

A compost blanket, if properly installed, can be very successful at vegetation establishment, weed suppression and erosion control. The compost blanket comes into direct contact with the underlying soil, reducing rill formation. Furthermore, compost provides organic matter and nutrients important for vegetation growth. The compost blanket provides soil structure that allows water to infiltrate the soil surface and retain moisture, which also promotes seed germination and vegetation growth, in addition to reducing runoff.

Compost is typically derived from combinations of feedstocks, biosolids, leaf and yard trimmings, manure, wood, or mixed solid waste. Many types of compost are products of municipal recycle or "Greenwaste" programs. Compost is organic and biodegradable and can be left onsite. There are many types of compost with a variety of properties with specific functions, and accordingly, compost selection is an important design consideration in the application of this type of erosion control.

Categories

EC	Erosion Control	☑
SE	Sediment Control	
TC	Tracking Control	
WE	Wind Erosion Control	
NS	Non-Stormwater Management Control	
WM	Waste Management and Materials Pollution Control	

Legend:

☑ **Primary Category**

☒ **Secondary Category**

Targeted Constituents

Sediment	☑
Nutrients	
Trash	
Metals	
Bacteria	
Oil and Grease	
Organics	

Potential Alternatives

EC-3 Hydraulic Mulch

EC-4 Hydroseeding

EC-5 Soil Binders

EC-7 Geotextiles and Mats

EC-8 Wood Mulching

CASQA
CALIFORNIA STORMWATER QUALITY ASSOCIATION

Suitable Applications

A compost blanket is appropriate for slopes and earth disturbed areas requiring protection until permanent stabilization is established. A compost blanket can also used in combination with temporary and/or permanent seeding strategies to enhance plant establishment. Examples include:

- Rough-graded areas that will remain inactive for longer than 14 days
- Soil stockpiles
- Slopes with exposed soil between existing vegetation such as trees or shrubs
- Slopes planted with live, container-grown vegetation
- Disturbed areas where plants are slow to develop

A compost blanket is typically used on slopes of 2:1 (H:V) or gentler. However, a compost blanket can be effective when applied to slopes as steep as 1:1 (H:V) with appropriate design considerations including slope length, blanket thickness, adding components such as a tackifier, or using compost blankets in conjunction with other techniques, such as compost socks and berms or fiber rolls.

Compost can be pre-seeded prior to application to the soil (recommended by the EPA for construction site stormwater runoff control) or seeded after the blanket has been installed. The compost medium can also remove pollutants in stormwater including heavy metals; oil and grease; and hydrocarbons (USEPA, 1998).

Limitations

- Compost can potentially leach nutrients (dissolved phosphorus and nitrogen) into runoff and potentially impact water quality. Compost should not be used directly upstream from nutrient impaired waterbodies (Adams et. al, 2008).
- Compost may also contain other undesirable constituents that are detrimental to water quality. Carefully consider the qualifications and experience of any compost producer/supplier.
- A compost blanket applied by hand is more time intensive and potentially costly. Using a pneumatic blower truck is the recommended cost effective method of application.
- When blowers are used, the treatment areas should be within 300 ft of a road or surface capable of supporting trucks.
- Wind may limit application of compost and result in application to undesired locations.
- Compost blankets should not be applied in areas of concentrated flows.
- Steeper slopes may require additional blanket thickness and other stability measures such as using tackifiers or slope interruption devices (compost socks and berms, or fiber rolls). The same applies for sites with high precipitation totals or during the rainy season.

Implementation

- Additional guidance on the comparison and selection of temporary slope stabilization methods is provided in Appendix F of the Handbook.

Compost Materials

- California Compost Regulations (Title 14, California Code of Regulations, Division 7, Chapter 3.1, Article 7, Section 17868.3) define and require a quality of compost for application. Compost should comply with all physical and chemical requirements. Specific requirements are provided in Table 1 below, taken from Caltrans Standard Special Provision 10-1 (SSP 10-1), Erosion Control (Compost Blanket).
- The compost producer should be fully permitted as specified under the California Integrated Waste Management Board, Local Enforcement Agencies and any other State and Local Agencies that regulate Solid Waste Facilities. If exempt from State permitting requirements, the composting facility should certify that it follows guidelines and procedures for production of compost meeting the environmental health standards of Title 14, California Code of Regulations, Division 7, Chapter 3.1, Article 7.
- The compost producer should be a participant in United States Composting Council's Seal of Testing Assurance program.
- Compost moisture should be considered for composition quality and application purposes. A range of 30-50% is typical. Compost that is too dry is hard to apply and compost that is too wet is more difficult (and more expensive) to transport. For arid or semi-arid areas, or for application during the dry season, use compost with greater moisture content than areas with wetter climates. For wetter or more humid climates or for application during the wet season, drier composts can be used as the compost will absorb moisture from the ambient air.
- Organic content of the compost is also important and should range from 30 to 65% depending on site conditions.
- Compost should be high-quality mature compost. Immature compost can potentially leach nutrients.
- Compost should not be derived from mixed municipal solid waste and should be free of visible contaminants.
- Compost should not contain paint, petroleum products, pesticides or any other chemical residues harmful to animal life or plant growth. Metal concentrations in compost should not exceed the maximum metal concentrations listed under Title 14, California Code of Regulations, Division 7, Chapter 3.1, Section 17868.2.
- Compost should not possess objectionable odors.
- Compost should be weed free.

Table 1. Physical/Chemical Requirements of Compost
Reference - Caltrans SSP-10 Erosion Control Blanket (Compost)

Property	Test Method	Requirement
pH	*TMECC 04.11-A Elastometric pH 1:5 Slurry Method pH Units	6.0–8.0
Soluble Salts	TMECC 04.10-A Electrical Conductivity 1:5 Slurry Method dS/m (mmhos/cm)	0-10.0
Moisture Content	TMECC 03.09-A Total Solids & Moisture at 70+/- 5 deg C % Wet Weight Basis	30-60
Organic Matter Content	TMECC 05.07-A Loss-On-Ignition Organic Matter Method (LOI) % Dry Weight Basis	30–65
Maturity	TMECC 05.05-A Germination and Vigor Seed Emergence Seedling Vigor % Relative to Positive Control	80 or Above 80 or Above
Stability	TMECC 05.08-B Carbon Dioxide Evolution Rate mg CO_2-C/g OM per day	8 or below
Particle Size	TMECC 02.02-B Sample Sieving for Aggregate Size Classification % Dry Weight Basis	100% Passing, 3 inch 90-100% Passing, 1 inch 65-100% Passing, 3/4 inch 0 - 75% Passing, 1/4 inch Maximum length 6 inches
Pathogen	TMECC 07.01-B Fecal Coliform Bacteria < 1000 MPN/gram dry wt.	Pass
Pathogen	TMECC 07.01-B Salmonella < 3 MPN/4 grams dry wt.	Pass
Physical Contaminants	TMECC 02.02-C Man Made Inert Removal and Classification: Plastic, Glass and Metal % > 4mm fraction	Combined Total: < 1.0
Physical Contaminants	TMECC 02.02-C Man Made Inert Removal and Classification: Sharps (Sewing needles, straight pins and hypodermic needles) % > 4mm fraction	None Detected

*TMECC refers to "Test Methods for the Examination of Composting and Compost," published by the United States Department of Agriculture and the United States Compost Council (USCC).

Installation

- Prior to compost application, prepare the slope by removing loose rocks, roots, stumps, and other debris greater than 2" in diameter. Prepare the slope area surface by scarifying or track walking/roughening if necessary.
- Select method to apply the compost blanket. A pneumatic blower is most cost effective and most adaptive in applying compost to steep, rough terrain, and hard to reach locations.
- A compost blanket thickness of 1" to 4" should be applied to slopes of 2:1 (H:V) or gentler, based on site-specific conditions. Increase blanket thickness with increased slope steepness and/or during installation during the rainy season (for example, 2" to 3" should be used for a

3:1 slope, while 1" to 2" can be used for a 4:1 slope). Erosion control using a compost blanket is not recommended for slopes greater than 1:1 (H:V).

- For steeper slopes, tackifiers should be utilized and/or other stabilization techniques employed. For example, compost socks or berms can be installed at intervals over the compost blanket (in a similar manner as Fiber Rolls, SE-5).
- Compost socks or berms (or equivalent linear sediment control BMP) should be placed at the top and/or bottom of the slope for additional erosion control performance.
- For optimum vegetation establishment, a blanket thickness of 1" to 2" is recommended. If vegetation establishment is not the primary function of the compost blanket, a thicker blanket may be recommended based on slope or rainfall conditions.
- Evenly distribute compost on the soil surface to the desired blanket thickness (1/2" to 4" as calculated prior based on site conditions and objectives). Even distribution is an important factor in preventing future rill and gully erosion.
- The compost blanket should extend 3 to 6 feet over the top of the shoulder of the slope. A compost sock or compost berm can be used at the top of the slope as an auxiliary technique to prevent runoff from flowing underneath the compost blanket.
- Use additional anchoring and erosion control BMPs in conjunction of the compost blanket as needed.

Costs

The cost associated with a compost blanket is similar to that of a straw mat and generally less expensive than a geotextile blanket (USEPA, 2009). Caltrans has provided a recent estimate for $5,000 to $8,000 per acre for application of an unseeded 1 inch compost blanket (Caltrans Compost Specifications, 2009). Recently obtained vendor costs indicate that proprietary blends of compost that are seeded and contain a nutrient rich "tackifier" can cost approximately $0.35 per square foot, or approximately $15,000 per acre for a 2 inch blanket. Application by hand is more time intensive and likely more costly.

Inspection and Maintenance

- BMPs must be inspected in accordance with General Permit requirements for the associated project type and risk level. It is recommended that at a minimum, BMPs be inspected weekly, prior to forecasted rain events, daily during extended rain events, and after the conclusion of rain events.
- Areas where erosion is evident, another layer of compost should be reapplied as soon as possible. It may be necessary to install an additional type of stormwater BMP at the top of slope or as a slope interrupter to control flow, such as a fiber roll (SE-5) or compost sock (SE-11).
- Care should be exercised to minimize the damage to protected areas while making repairs, as any area damaged will require reapplication of BMPs.
- Limit or prohibit foot traffic to minimize damage to BMP or impede vegetation establishment.

References

An Analysis of Composting as an Environmental Remediation Technology, U.S. Environmental Protection Agency (USEPA), Solid Waste and Emergency Response (5305W), EPA530-R-8-008, 1998.

Characteristics of Compost: Moisture Holding and Water Quality Improvement, Center for Research in Water Resources, Kirchoff, C., Malina, J., and Barrett, M., 2003.

Compost Utilization for Erosion Control, The University of Georgia College of Agricultural and Environmental Sciences, pubs.caes.uga.edu/caespubs/pubcd/B1200.htm, Faucette, B. and Risse, M., 2009.

Demonstration Project Using Yard Debris Compost for Erosion Control, Final Report, presented to Metropolitan Service District, W&H Pacific, 1993.

Erosion and Sediment Control Manual, Oregon Department of Environmental Quality, 2005.

Standard Special Provision 10-1, Erosion Control (Compost Blanket), California Department of Transportation (Caltrans). 2007 Update.

Evaluation of Environmental Benefits and Impacts of Compost and Industry Standard Erosion and Sediment Controls Measures Used in Construction Activities, Dissertation, Institute of Ecology, University of Georgia, Faucette, B., 2004.

Filter Sock Presentation provided at Erosion, Sediment Control and Stormwater Management with Compost BMPs Workshop, U.S. Composting Council 13th Annual Conference and Trade Show, McCoy, S., 2005.

National Pollutant Discharge Elimination System (NPDES), Compost Blankets, U.S. Environmental Protection Agency (USEPA). http://cfpub.epa.gov/npdes/stormwater/menuofbmps/index.cfm?action=factsheet_results&view=specific&bmp=118, 2009.

Standard Specifications for Transportation Materials and Methods of Sampling and Testing Designation M10-03, Compost for Erosion/Sediment Control (Compost Blankets), Provisional, American Association of State Highway Transportation Officials (AASHTO), 2003.

Stormwater Best Management Practices (BMPs) Field Trials of Erosion Control Compost in Reclamation of Rock Quarry Operations, Nonpoint Source Protection Program CWA §319(h), Texas Commission on Environmental Quality, Adams, T., McFarland, A., Hauck, L., Barrett, M., and Eck, B., 2008.

Soil Preparation/Roughening EC-15

Description and Purpose

Soil Preparation/Roughening involves assessment and preparation of surface soils for BMP installation. This can include soil testing (for seed base, soil characteristics, or nutrients), as well as roughening surface soils by mechanical methods (including sheepsfoot rolling, track walking, scarifying, stair stepping, and imprinting) to prepare soil for additional BMPs, or to break up sheet flow. Soil Preparation can also involve tilling topsoil to prepare a seed bed and/or incorporation of soil amendments, to enhance vegetative establishment.

Suitable Applications

Soil preparation: Soil preparation is essential to proper vegetative establishment. In particular, soil preparation (i.e. tilling, raking, and amendment) is suitable for use in combination with any soil stabilization method, including RECPs or sod. Soil preparation should not be confused with roughening.

Roughening: Soil roughening is generally referred to as track walking (sometimes called imprinting) a slope, where treads from heavy equipment run parallel to the contours of the slope and act as mini terraces. Soil preparation is most effective when used in combination with erosion controls. Soil Roughening is suitable for use as a complementary process for controlling erosion on a site. Roughening is not intended to be used as a stand-alone BMP, and should be used with perimeter controls, additional erosion control measures, grade breaks, and vegetative establishment for maximum effectiveness. Roughening is intended to only affect surface soils and should not compromise slope stability or overall compaction. Suitable applications for soil roughening include:

Categories

EC	Erosion Control	☑
SE	Sediment Control	☒
TC	Tracking Control	
WE	Wind Erosion Control	
NS	Non-Stormwater Management Control	
WM	Waste Management and Materials Pollution Control	

Legend:

☑ **Primary Category**

☒ **Secondary Category**

Targeted Constituents

Sediment	☑
Nutrients	
Trash	
Metals	
Bacteria	
Oil and Grease	
Organics	

Potential Alternatives

EC-3 Hydraulic Mulch

EC-5 Soil Binders

EC-7 Geotextiles and Mats

CASQA
CALIFORNIA STORMWATER QUALITY ASSOCIATION

- Along any disturbed slopes, including temporary stockpiles, sediment basins, or compacted soil diversion berms and swales.

- Roughening should be used in combination with hydraulically applied stabilization methods, compost blanket, or straw mulch; but should not be used in combination with RECPs or sod because roughening is intended to leave terraces on the slope.

Limitations

- Preparation and roughening must take place prior to installing other erosion controls (such as hydraulically applied stabilizers) or sediment controls (such as fiber rolls) on the faces of slopes.

- In such cases where slope preparation is minimal, erosion control/revegetation BMPs that do not require extensive soil preparation - such as hydraulic mulching and seeding applications - should be employed.

- Consideration should be given to the type of erosion control BMP that follows surface preparation, as some BMPs are not designed to be installed over various types of tillage/roughening, i.e., RECPs (erosion control blankets) should not be used with soil roughening due to a "bridging" effect, which suspends the blanket above the seed bed.

- Surface roughness has an effect on the amount of mulch material that needs to be applied, which shows up as a general increase in mulch material due to an increase in surface area (Topographic Index -see EC-3 Hydraulic Mulching).

Implementation

- Additional guidance on the comparison and selection of temporary slope stabilization methods is provided in Appendix F of the Handbook.

General

A roughened surface can significantly reduce erosion. Based on tests done at the San Diego State Erosion Research Laboratory, various roughening techniques on slopes can result in a 12 - 76% reduction in the erosion rate versus smooth slopes.

Materials

Minimal materials are required unless amendments and/or seed are added to the soil. The majority of soil roughening/preparation can be done with equipment that is on hand at a normal construction site, such as bull dozers and compaction equipment.

Installation Guidelines

Soil Preparation

- Where appropriate or feasible, soil should be prepared to receive the seed by disking or otherwise scarifying the surface to eliminate crust, improve air and water infiltration and create a more favorable environment for germination and growth.

- Based upon soil testing conducted, apply additional soil amendments (e.g. fertilizers, additional seed) to the soil to help with germination. Follow EC-4, Hydroseeding, when selecting and applying seed and fertilizers.

Cut Slope Roughening:

- Stair-step grade or groove the cut slopes that are steeper than 3:1.
- Use stair-step grading on any erodible material soft enough to be ripped with a bulldozer. Slopes consisting of soft rock with some subsoil are particularly suited to stair-step grading.
- Make the vertical cut distance less than the horizontal distance, and slightly slope the horizontal position of the "step" in toward the vertical wall.
- Do not make individual vertical cuts more than 2 feet (0.6 m) high in soft materials or more than 3 feet (0.9 m) high in rocky materials.
- Groove the slope using machinery to create a series of ridges and depressions that run across the slope, on the contour.

Fill Slope Roughening:

- Place on fill slopes with a gradient steeper than 3:1 in lifts not to exceed 8 inches (0.2 m), and make sure each lift is properly compacted.
- Ensure that the face of the slope consists of loose, uncompacted fill 4-6 inches (0.1-0.2 m) deep.
- Use grooving or tracking to roughen the face of the slopes, if necessary.
- Do not blade or scrape the final slope face.

Roughening for Slopes to be Mowed:

- Slopes which require mowing activities should not be steeper than 3:1.
- Roughen these areas to shallow grooves by track walking, scarifying, sheepsfoot rolling, or imprinting.
- Make grooves close together (less than 10 inches), and not less than 1 inch deep, and perpendicular to the direction of runoff (i.e., parallel to the slope contours).
- Excessive roughness is undesirable where mowing is planned.

Roughening With Tracked Machinery:

- Limit roughening with tracked machinery to soils with a sandy textural component to avoid undue compaction of the soil surface.
- Operate tracked machinery up and down the slope to leave horizontal depressions in the soil. Do not back-blade during the final grading operation.
- Seed and mulch roughened areas as soon as possible to obtain optimum seed germination and growth.

Costs

Costs are based on the additional labor of tracking or preparation of the slope plus the cost of any required soil amendment materials.

Inspection and Maintenance

- BMPs must be inspected in accordance with General Permit requirements for the associated project type and risk level. It is recommended that at a minimum, BMPs be inspected weekly, prior to forecasted rain events, daily during extended rain events, and after the conclusion of rain events.
- Check the seeded slopes for signs of erosion such as rills and gullies. Fill these areas slightly above the original grade, then reseed and mulch as soon as possible.
- Inspect BMPs weekly during normal operations, prior to forecasted rain events, daily during extended rain events, and after the conclusion of rain events.

References

Soil Stabilization BMP Research for Erosion and Sediment Controls: Cost Survey Technical Memorandum, State of California Department of Transportation (Caltrans), July 2007.

Erosion and Sediment Control Manual, Oregon Department of Environmental Quality, February 2005.

Non-Vegetative Stabilization EC-16

Categories

EC	Erosion Control	☑
SE	Sediment Control	☒
TR	Tracking Control	
WE	Wind Erosion Control	☒
NS	Non-Stormwater Management Control	
WM	Waste Management and Materials Pollution Control	

Legend:

☑ **Primary Category**

☒ **Secondary Category**

Targeted Constituents

Sediment	☑
Nutrients	
Trash	
Metals	
Bacteria	
Oil and Grease	
Organics	

Potential Alternatives

None

Description and Purpose

Non-vegetative stabilization methods are used for temporary or permanent stabilization of areas prone to erosion and should be used only where vegetative options are not feasible; examples include:

- Areas of vehicular or pedestrian traffic such as roads or paths;
- Arid environments where vegetation would not provide timely ground coverage, or would require excessive irrigation;
- Rocky substrate, infertile or droughty soils where vegetation would be difficult to establish; and
- Areas where vegetation will not grow adequately within the construction time frame.

There are several non-vegetative stabilization methods and selection should be based on site-specific conditions.

Decomposed Granite (DG) is a permanent erosion protection method that consists of a layer of stabilized decomposed granite placed over an erodible surface.

Degradable Mulches of various types (see EC-3, EC-6, EC-8) can be used for temporary non-vegetative stabilization; examples include straw mulch, compost, wood chips or hydraulic mulch.

Geotextiles and Mats can be used for temporary non-vegetative stabilization (see EC-7). These BMPs are typically manufactured

CASQA
CALIFORNIA STORMWATER QUALITY ASSOCIATION

from degradable or synthetic materials and are designed and specified based on their functional longevity, i.e., how long they will persist and provide erosion protection. All geotextiles and mats should be replaced when they exceed their functional longevity or when permanent stabilization methods are instituted.

Gravel Mulch is a non-degradable erosion control product that is composed of washed and screened coarse to very coarse gravel, 16 mm to 64 mm (0.6" - 2.5"), similar to an AASHTO No. 3 coarse aggregate.

Rock Slope Protection consists of utilizing large rock or rip-rap (4"- 24") to stabilize slopes with a high erosion potential and those subject to scour along waterways.

Soil Binders can be used for temporary non-vegetative stabilization (see EC-5). The key to their use is functional longevity. In most cases, the soil binder will need to be routinely monitored and re-applied to maintain an erosion-resistant coverage.

Suitable Applications

Non-vegetated stabilization methods are suitable for use on disturbed soil areas and on material stockpiles that need to be temporarily or permanently protected from erosion by water and wind. Non-vegetated stabilization should only be utilized when vegetation cannot be established in the required timeframe, due to soil or climactic conditions, or where vegetation may be a potential fire hazard.

Decomposed Granite (DG) and Gravel Mulch are suitable for use in areas where vegetation establishment is difficult, on flat surfaces, trails and pathways, and when used in conjunction with a stabilizer or tackifier, on shallow slopes (i.e., 10:1 [H:V]). DG and gravel can also be used on shallow rocky slopes where vegetation cannot be established for permanent erosion control.

Degradable Mulches can be used to cover and protect soil surfaces from erosion both in temporary and permanent applications. In many cases, the use of mulches by themselves requires routine inspection and re-application. See EC-3 Hydraulic Mulch, EC-6 Straw Mulch, EC-8 Wood Mulch, or EC-14 Compost Blankets for more information.

Geotextiles and Mats can be used as a temporary stand-alone soil stabilization method. Depending on material selection, geotextiles and mats can be a short-term (3 mos – 1 year) or long-term (1-2 years) temporary stabilization method. For more information on geotextiles and mats see EC-7 Geotextiles and Mats.

Rock Slope Protection can be used when the slopes are subject to scour or have a high erosion potential, such as slopes adjacent to flowing waterways or slopes subject to overflow from detention facilities (spillways).

Soil Binders can be used for temporary stabilization of stockpiles and disturbed areas not subject to heavy traffic. See EC-5 Soil Binders for more information.

Limitations

General

- Refer to EC-3, EC-6, EC-8, and EC-14 for limitations on use of mulches. Refer to EC-7 for limitations on use of geotextiles and mats. Refer to EC-5 for limitations on use of Soil Binders.

Decomposed Granite

- Not available in some geographic regions.
- If not tackified, material may be susceptible to erosion even on slight slopes (e.g., 30:1 [H:V]).
- Installed costs may be more expensive than vegetative stabilization methods.

Gravel Mulch

- Availability is limited in some geographic regions.
- If not properly screened and washed, can contain fine material that can erode and/or create dust problems.
- If inadequately sized, material may be susceptible to erosion on sloped areas.
- Pore spaces fill with dirt and debris over time; may provide a growing medium for weeds.

Rock Slope Protection

- Installation is labor intensive.
- Installed costs can be significantly higher than vegetative stabilization methods.
- Rounded stones may not be used on slopes greater than 2:1 [H:V].

Implementation

General

Non-vegetated stabilization should be used in accordance with the following general guidance:

- Should be used in conjunction with other BMPs, including drainage, erosion controls and sediment controls.
- Refer to EC-3, EC-6, EC-8, and EC-14 for implementation details for mulches. Refer to EC-7 for implementation details for geotextiles and mats. Refer to EC-5 for implementation details for soil binders.
- Non-vegetated stabilization measures should be implemented as soon as the disturbance in the areas they are intended to protect has ceased.
- Additional guidance on the comparison and selection of temporary slope stabilization methods is provided in Appendix F of the Handbook.

Decomposed Granite Stabilization

- If used for a road or path should be installed on a prepared base.

- Should be mixed with a stabilizer if used for roads or pathways, or on slope applications.
- Though porous it is recommended to prevent standing water on or next to a decomposed granite road or pathway.

Gravel Mulch

- Should be sized based on slope, rainfall, and upgradient run-on conditions. Stone size should be increased as potential for erosion increases (steeper slopes, high intensity rainfall).
- If permanent, a weed control fabric should be placed prior to installation.
- Should be installed at a minimum 2" depth.
- Should completely cover all exposed surfaces.

Rock Slope Protection

- Rock slope protection installation should follow Caltrans Standard Specification 72-2: Rock Slope Protection. Refer to the specification for rock conformity requirements and installation methods.
- When using rock slope protection, rock size and installation method should be specified by an Engineer.
- A geotextile fabric should be placed prior to installation.

Costs

- Costs are highly variable depending not only on technique chosen, but also on materials chosen within specific techniques. In addition, availability of certain materials will vary by region/location, which will also affect the cost. Costs of mulches, geotextiles and mats, and soil binders are presented in their respective fact sheets. Costs for decomposed granite, gravel mulch stabilization and rock slope protection may be higher depending on location and availability of materials. Caltrans has provided an estimate for gravel mulch of \$10 - \$15/yd^2 in flat areas and \$11 - \$23/yd^2 on side slopes.

Inspection and Maintenance

General

- BMPs must be inspected in accordance with General Permit requirements for the associated project type and risk level. It is recommended that at a minimum, BMPs be inspected weekly, prior to forecasted rain events, daily during extended rain events, and after the conclusion of rain events.
- For permanent installation, require inspection periodically and after major storm events to look for signs of erosion or damage to the stabilization.
- All damage should be repaired immediately.
- Refer to EC-3, EC-6, EC-8, and EC-14 for inspection and maintenance requirements for mulches. Refer to EC-7 for inspection and maintenance requirements for geotextiles and mats. Refer to EC-5 for inspection and maintenance requirements for soil binders.

Decomposed Granite and Gravel Mulch Stabilization

- Rake out and add decomposed granite or gravel as needed to areas subject to rill erosion. Inspect upgradient drainage controls and repair/modify as necessary.
- Should remain stable under loose surface material. Any significant problem areas should be repaired to restore uniformity to the installation.

References

Arid Zone Forestry: A Guide for Field Technicians. Food and Agriculture Organization of the United Nations, 1989.

Design of Roadside Channels with Flexible Linings, Hydraulic Engineering Circular Number 15, Third Edition, Federal Highway Administration, 2007.

Design Standards for Urban Infrastructure - Soft Landscape Design, Department of Territory and Municipal Services - Australian Capital Territory http://www.tams.act.gov.au/work/standards_and_procedures/design_standards_for_urban_infrastructure

Erosion and Sediment Control Handbook: A Guide for Protection of State Waters through the use of Best Management Practices during Land Disturbing Activities, Tennessee Department of Environment and Conservation, 2002.

Gravel Mulch, Landscape Architecture Non-Standard Specification 10-2, California Department of Transportation (Caltrans), http://www.dot.ca.gov/hq/LandArch/roadside/detail-gm.htm

Maine Erosion and Sediment Control BMPs, DEPLW0588, Maine Department of Environmental Protection: Bureau of Land and Water Quality, 2003.

National Menu of Best Management Practices, US Environmental Protection Agency, 2006.

Standard Specification 72-2: Rock Slope Protection. California Department of Transportation, 2006.

Stormwater Quality Handbooks Construction Site Best Management Practices (BMPs) Manual, State of California Department of Transportation (Caltrans), March 2003.

Silt Fence SE-1

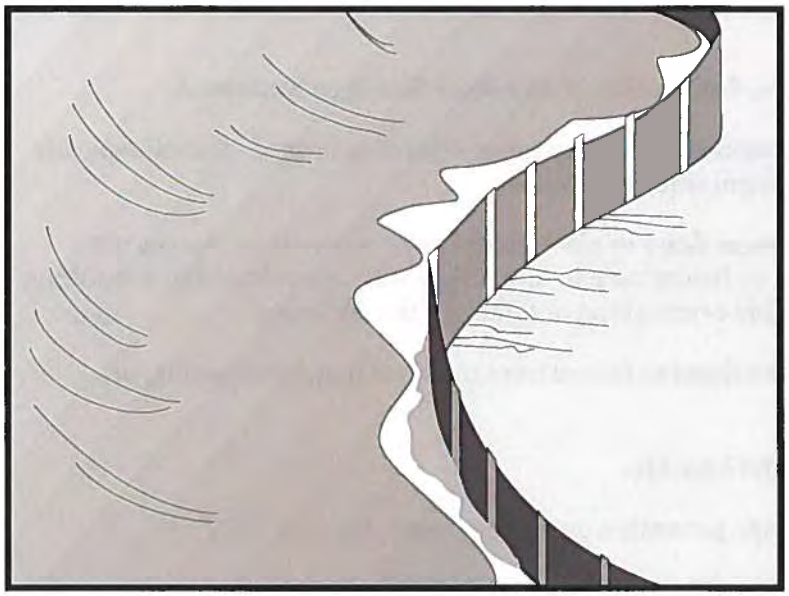

Categories

EC	Erosion Control	
SE	Sediment Control	☑
TC	Tracking Control	
WE	Wind Erosion Control	
NS	Non-Stormwater Management Control	
WM	Waste Management and Materials Pollution Control	

Legend:

☑ **Primary Category**

☒ **Secondary Category**

Targeted Constituents

Sediment	☑
Nutrients	
Trash	
Metals	
Bacteria	
Oil and Grease	
Organics	

Potential Alternatives

SE-5 Fiber Rolls

SE-6 Gravel Bag Berm

SE-8 Sandbag Barrier

SE-10 Storm Drain Inlet Protection

SE-14 Biofilter Bags

Description and Purpose

A silt fence is made of a woven geotextile that has been entrenched, attached to supporting poles, and sometimes backed by a plastic or wire mesh for support. The silt fence detains sediment-laden water, promoting sedimentation behind the fence.

Suitable Applications

Silt fences are suitable for perimeter control, placed below areas where sheet flows discharge from the site. They could also be used as interior controls below disturbed areas where runoff may occur in the form of sheet and rill erosion and around inlets within disturbed areas (SE-10). Silt fences are generally ineffective in locations where the flow is concentrated and are only applicable for sheet or overland flows. Silt fences are most effective when used in combination with erosion controls. Suitable applications include:

- Along the perimeter of a project.
- Below the toe or down slope of exposed and erodible slopes.
- Along streams and channels.
- Around temporary spoil areas and stockpiles.
- Around inlets.
- Below other small cleared areas.

CASQA
CALIFORNIA STORMWATER QUALITY ASSOCIATION

Limitations

- Do not use in streams, channels, drain inlets, or anywhere flow is concentrated.
- Do not use in locations where ponded water may cause a flooding hazard. Runoff typically ponds temporarily on the upstream side of silt fence.
- Do not use silt fence to divert water flows or place across any contour line. Fences not constructed on a level contour, or fences used to divert flow will concentrate flows resulting in additional erosion and possibly overtopping or failure of the silt fence.
- Improperly installed fences are subject to failure from undercutting, overtopping, or collapsing.
- Not effective unless trenched and keyed in.
- Not intended for use as mid-slope protection on slopes greater than 4:1 (H:V).
- Do not use on slopes subject to creeping, slumping, or landslides.

Implementation

General

A silt fence is a temporary sediment barrier consisting of woven geotextile stretched across and attached to supporting posts, trenched-in, and, depending upon the strength of fabric used, supported with plastic or wire mesh fence. Silt fences trap sediment by intercepting and detaining small amounts of sediment-laden runoff from disturbed areas in order to promote sedimentation behind the fence.

The following layout and installation guidance can improve performance and should be followed:

- Use principally in areas where sheet flow occurs.
- Install along a level contour, so water does not pond more than 1.5 ft at any point along the silt fence.
- The maximum length of slope draining to any point along the silt fence should be 200 ft or less.
- The maximum slope perpendicular to the fence line should be 1:1.
- Provide sufficient room for runoff to pond behind the fence and to allow sediment removal equipment to pass between the silt fence and toes of slopes or other obstructions. About 1200 ft^2 of ponding area should be provided for every acre draining to the fence.
- Turn the ends of the filter fence uphill to prevent stormwater from flowing around the fence.
- Leave an undisturbed or stabilized area immediately down slope from the fence where feasible.

- Silt fences should remain in place until the disturbed area is permanently stabilized, after which, the silt fence should be removed and properly disposed.
- Silt fence should be used in combination with erosion source controls up slope in order to provide the most effective sediment control.
- Be aware of local regulations regarding the type and installation requirements of silt fence, which may differ from those presented in this fact sheet.

Design and Layout

The fence should be supported by a plastic or wire mesh if the fabric selected does not have sufficient strength and bursting strength characteristics for the planned application (as recommended by the fabric manufacturer). Woven geotextile material should contain ultraviolet inhibitors and stabilizers to provide a minimum of six months of expected usable construction life at a temperature range of 0 °F to 120 °F.

- Layout in accordance with attached figures.
- For slopes steeper than 2:1 (H:V) and that contain a high number of rocks or large dirt clods that tend to dislodge, it may be necessary to install additional protection immediately adjacent to the bottom of the slope, prior to installing silt fence. Additional protection may be a chain link fence or a cable fence.
- For slopes adjacent to sensitive receiving waters or Environmentally Sensitive Areas (ESAs), silt fence should be used in conjunction with erosion control BMPs.

Standard vs. Heavy Duty Silt Fence

Standard Silt Fence

- Generally applicable in cases where the slope of area draining to the silt fence is 4:1 (H:V) or less.
- Used for shorter durations, typically 5 months or less
- Area draining to fence produces moderate sediment loads.

Heavy Duty Silt Fence

- Use is generally limited to 8 months or less.
- Area draining to fence produces moderate sediment loads.
- Heavy duty silt fence usually has 1 or more of the following characteristics, not possessed by standard silt fence.
  - Fence fabric has higher tensile strength.
  - Fabric is reinforced with wire backing or additional support.
  - Posts are spaced closer than pre-manufactured, standard silt fence products.
  - Posts are metal (steel or aluminum)

Materials

<u>Standard Silt Fence</u>

- Silt fence material should be woven geotextile with a minimum width of 36 in. and a minimum tensile strength of 100 lb force. The fabric should conform to the requirements in ASTM designation D4632 and should have an integral reinforcement layer. The

reinforcement layer should be a polypropylene, or equivalent, net provided by the manufacturer. The permittivity of the fabric should be between 0.1 sec^{-1} and 0.15 sec^{-1} in conformance with the requirements in ASTM designation D4491.

- Wood stakes should be commercial quality lumber of the size and shape shown on the plans. Each stake should be free from decay, splits or cracks longer than the thickness of the stake or other defects that would weaken the stakes and cause the stakes to be structurally unsuitable.

- Staples used to fasten the fence fabric to the stakes should be not less than 1.75 in. long and should be fabricated from 15 gauge or heavier wire. The wire used to fasten the tops of the stakes together when joining two sections of fence should be 9 gauge or heavier wire. Galvanizing of the fastening wire will not be required.

Heavy-Duty Silt Fence

- Some silt fence has a wire backing to provide additional support, and there are products that may use prefabricated plastic holders for the silt fence and use metal posts or bar reinforcement instead of wood stakes. If bar reinforcement is used in lieu of wood stakes, use number four or greater bar. Provide end protection for any exposed bar reinforcement for health and safety purposes.

Installation Guidelines – Traditional Method

Silt fences are to be constructed on a level contour. Sufficient area should exist behind the fence for ponding to occur without flooding or overtopping the fence.

- A trench should be excavated approximately 6 in. wide and 6 in. deep along the line of the proposed silt fence (trenches should not be excavated wider or deeper than necessary for proper silt fence installation).

- Bottom of the silt fence should be keyed-in a minimum of 12 in.

- Posts should be spaced a maximum of 6 ft apart and driven securely into the ground a minimum of 18 in. or 12 in. below the bottom of the trench.

- When standard strength geotextile is used, a plastic or wire mesh support fence should be fastened securely to the upslope side of posts using heavy–duty wire staples at least 1 in. long. The mesh should extend into the trench.

- When extra-strength geotextile and closer post spacing are used, the mesh support fence may be eliminated.

- Woven geotextile should be purchased in a long roll, then cut to the length of the barrier. When joints are necessary, geotextile should be spliced together only at a support post, with a minimum 6 in. overlap and both ends securely fastened to the post.

- The trench should be backfilled with native material and compacted.

- Construct silt fences with a setback of at least 3 ft from the toe of a slope. Where, due to specific site conditions, a 3 ft setback is not available, the silt fence may be constructed at the

toe of the slope, but should be constructed as far from the toe of the slope as practicable. Silt fences close to the toe of the slope will be less effective and more difficult to maintain.

- Construct the length of each reach so that the change in base elevation along the reach does not exceed 1/3 the height of the barrier; in no case should the reach exceed 500 ft.
- Cross barriers should be a minimum of $^1/_3$ and a maximum of ½ the height of the linear barrier.
- See typical installation details at the end of this fact sheet.

Installation Guidelines - Static Slicing Method

- Static Slicing is defined as insertion of a narrow blade pulled behind a tractor, similar to a plow blade, at least 10 inches into the soil while at the same time pulling silt geotextile fabric into the ground through the opening created by the blade to the depth of the blade. Once the gerotextile is installed, the soil is compacted using tractor tires.
- This method will not work with pre-fabricated, wire backed silt fence.
- Benefits:
    - Ease of installation (most often done with a 2 person crew). In addition, installation using static slicing has been found to be more efficient on slopes, in rocky soils, and in saturated soils.
    - Minimal soil disturbance.
    - Greater level of compaction along fence, leading to higher performance (i.e. greater sediment retention).
    - Uniform installation.
    - Less susceptible to undercutting/undermining.

Costs

- It should be noted that costs vary greatly across regions due to available supplies and labor costs.
- Average annual cost for installation using the traditional silt fence installation method (assumes 6 month useful life) is $7 per linear foot based on vendor research. Range of cost is $3.50 - $9.10 per linear foot.
- In tests, the slicing method required 0.33 man hours per 100 linear feet, while the trenched based systems required as much as 1.01 man hours per linear foot.

Inspection and Maintenance

- BMPs must be inspected in accordance with General Permit requirements for the associated project type and risk level. It is recommended that at a minimum, BMPs be inspected weekly, prior to forecasted rain events, daily during extended rain events, and after the conclusion of rain events.
- Repair undercut silt fences.

- Repair or replace split, torn, slumping, or weathered fabric. The lifespan of silt fence fabric is generally 5 to 8 months.
- Silt fences that are damaged and become unsuitable for the intended purpose should be removed from the site of work, disposed, and replaced with new silt fence barriers.
- Sediment that accumulates in the BMP should be periodically removed in order to maintain BMP effectiveness. Sediment should be removed when the sediment accumulation reaches one-third of the barrier height.
- Silt fences should be left in place until the upstream area is permanently stabilized. Until then, the silt fence should be inspected and maintained regularly.
- Remove silt fence when upgradient areas are stabilized. Fill and compact post holes and anchor trench, remove sediment accumulation, grade fence alignment to blend with adjacent ground, and stabilize disturbed area.

References

Manual of Standards of Erosion and Sediment Control Measures, Association of Bay Area Governments, May 1995.

National Management Measures to Control Nonpoint Source Pollution from Urban Areas, United States Environmental Protection Agency, 2002.

Proposed Guidance Specifying Management Measures for Sources of Nonpoint Pollution in Coastal Waters, Work Group-Working Paper, USEPA, April 1992.

Sedimentation and Erosion Control Practices, and Inventory of Current Practices (Draft), UESPA, 1990.

Southeastern Wisconsin Regional Planning Commission (SWRPC). Costs of Urban Nonpoint Source Water Pollution Control Measures. Technical Report No. 31. Southeastern Wisconsin Regional Planning Commission, Waukesha, WI. 1991

Stormwater Quality Handbooks - Construction Site Best Management Practices (BMPs) Manual, State of California Department of Transportation (Caltrans), March 2003.

Stormwater Management Manual for The Puget Sound Basin, Washington State Department of Ecology, Public Review Draft, 1991.

U.S. Environmental Protection Agency (USEPA). Stormwater Management for Industrial Activities: Developing Pollution Prevention Plans and Best Management Practices. U.S. Environmental Protection Agency, Office of Water, Washington, DC, 1992.

Water Quality Management Plan for the Lake Tahoe Region, Volume II, Handbook of Management Practices, Tahoe Regional Planning Agency, November 1988.Soil Stabilization BMP Research for Erosion and Sediment Controls: Cost Survey Technical Memorandum, State of California Department of Transportation (Caltrans), July 2007.

Erosion and Sediment Control Manual, Oregon Department of Environmental Quality, February 2005.

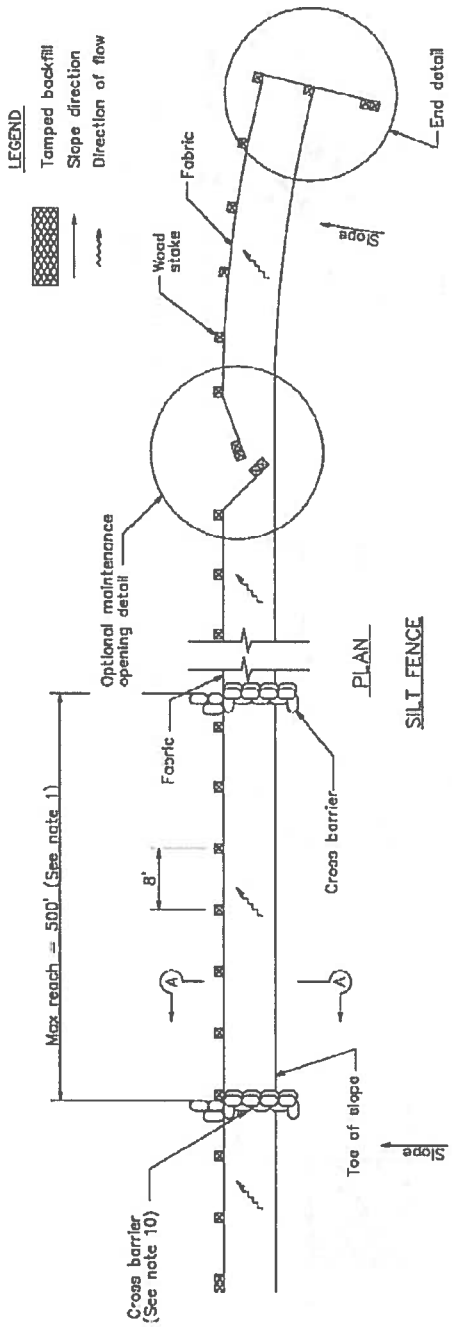

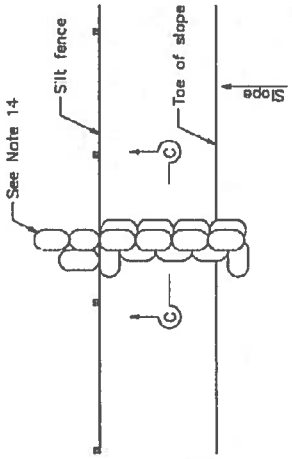

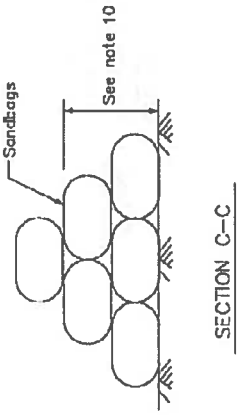

NOTES

1. Construct the length of each reach so that the change in base elevation along the reach does not exceed 1/3 the height of the linear barrier, in no case shall the reach length exceed 500'.
2. The last 8'–0" of fence shall be turned up slope.
3. Stake dimensions are nominal.
4. Dimension may vary to fit field condition.
5. Stakes shall be spaced at 8'–0" maximum and shall be positioned on downstream side of fence.
6. Stakes to overlap and fence fabric to fold around each stake one full turn. Secure fabric to stake with 4 staples.
7. Stakes shall be driven tightly together to prevent potential flow–through of sediment at joint. The tops of the stakes shall be secured with wire.
8. For end stake, fence fabric shall be folded around two stakes one full turn and secured with 4 staples.
9. Minimum 4 staples per stake. Dimensions shown are typical.
10. Cross barriers shall be a minimum of 1/3 and a maximum of 1/2 the height of the linear barrier.
11. Maintenance openings shall be constructed in a manner to ensure sediment remains behind silt fence.
12. Joining sections shall not be placed at sump locations.
13. Sandbag rows and layers shall be offset to eliminate gaps.
14. Add 3–4 bags to cross barrier on downgradient side of silt fence as needed to prevent bypass or undermining and as allowable based on site limits of disturbance.

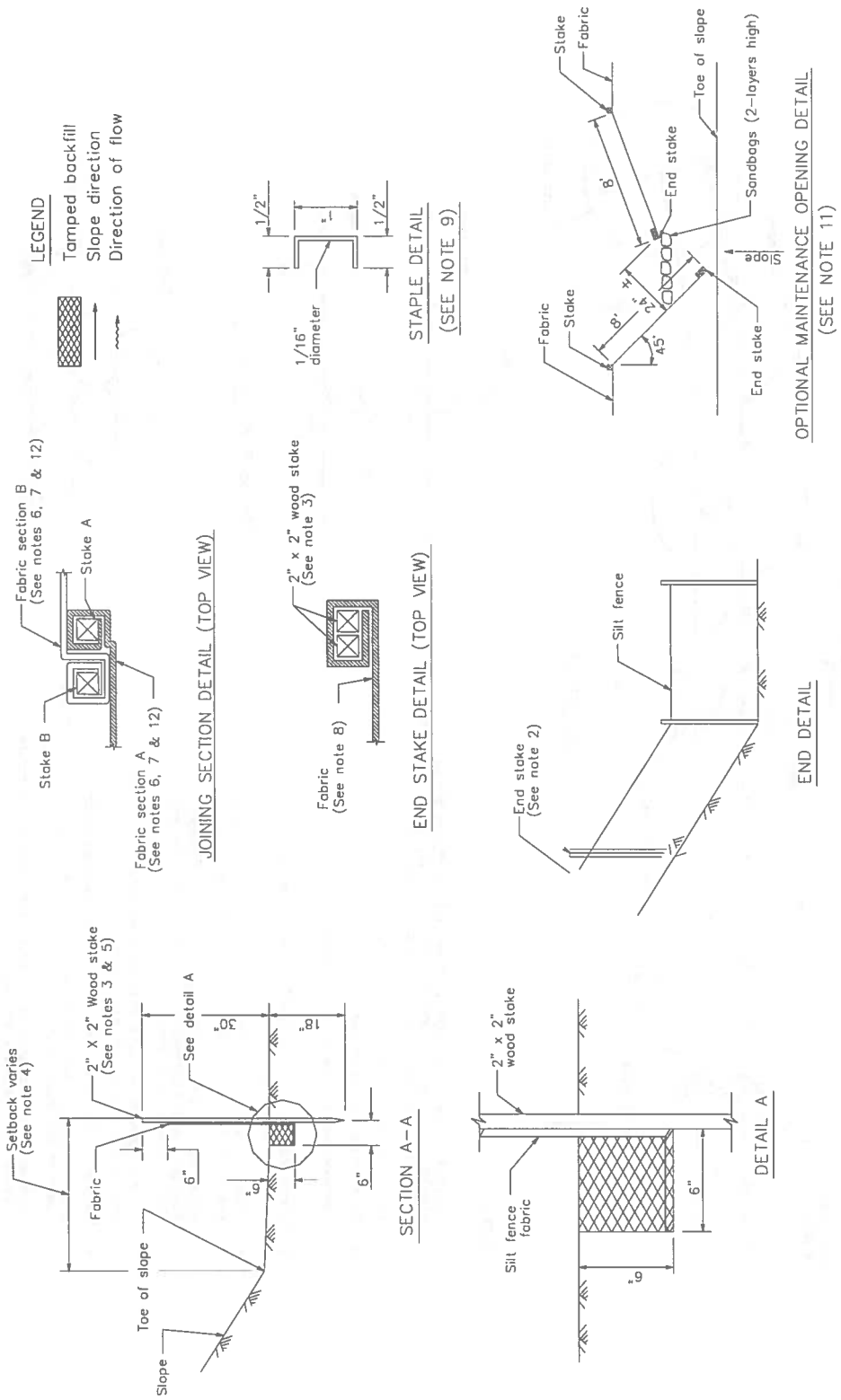

LEGEND
Tamped backfill
Slope direction
Direction of flow
Fabric section B (See notes 6, 7 & 12)
Stake A
Stake B
Fabric section A (See notes 6, 7 & 12)
JOINING SECTION DETAIL (TOP VIEW)
2" x 2" wood stake (See note 3)
Fabric (See note 8)
END STAKE DETAIL (TOP VIEW)
1/2"
1"
1/2"
1/16" diameter
STAPLE DETAIL (SEE NOTE 9)
Stake
Fabric
Toe of slope
Sandbags (2-layers high)
End stake
8'
24"
45°
Slope
Fabric
Stake
End stake
OPTIONAL MAINTENANCE OPENING DETAIL (SEE NOTE 11)
Silt fence
End stake (See note 2)
END DETAIL
Setback varies (See note 4)
2" X 2" Wood stake (See notes 3 & 5)
See detail A
30"
18"
Fabric
6"
6"
6"
Toe of slope
Slope
SECTION A-A
2" x 2" wood stake
Silt fence fabric
6"
6"
DETAIL A

Sediment Basin SE-2

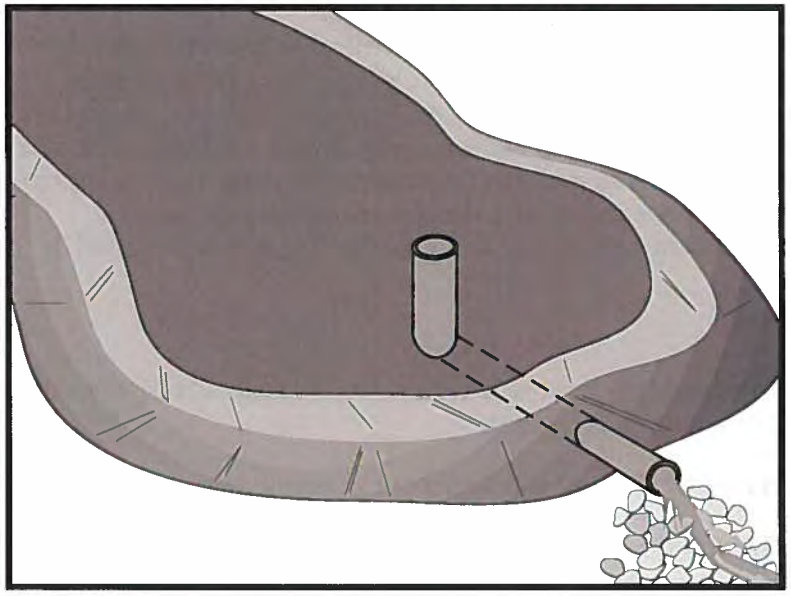

Categories

EC	Erosion Control	
SE	Sediment Control	☑
TC	Tracking Control	
WE	Wind Erosion Control	
NS	Non-Stormwater Management Control	
WM	Waste Management and Materials Pollution Control	

Legend:

☑ **Primary Category**

☒ **Secondary Category**

Targeted Constituents

Sediment	☑
Nutrients	
Trash	☑
Metals	
Bacteria	
Oil and Grease	
Organics	

Potential Alternatives

SE-3 Sediment Trap (for smaller areas)

Description and Purpose

A sediment basin is a temporary basin formed by excavation or by constructing an embankment so that sediment-laden runoff is temporarily detained under quiescent conditions, allowing sediment to settle out before the runoff is discharged.

Sediment basin design guidance presented in this fact sheet is intended to provide options, methods, and techniques to optimize temporary sediment basin performance and basin sediment removal. Basin design guidance provided in this fact sheet is not intended to guarantee basin effluent compliance with numeric discharge limits (numeric action levels or numeric effluent limits for turbidity). Compliance with discharge limits requires a thoughtful approach to comprehensive BMP planning, implementation, and maintenance. Therefore, optimally designed and maintained sediment basins should be used in conjunction with a comprehensive system of BMPs that includes:

- Diverting runoff from undisturbed areas away from the basin
- Erosion control practices to minimize disturbed areas on-site
  and to provide temporary stabilization and interim sediment controls (e.g., stockpile perimeter control, check dams, perimeter controls around individual lots) to reduce the basin's influent sediment concentration.

At some sites, sediment basin design enhancements may be required to adequately remove sediment. Traditional

CASQA
CALIFORNIA STORMWATER QUALITY ASSOCIATION

(aka "physical") enhancements such as alternative outlet configurations or flow deflection baffles increase detention time and other techniques such as outlet skimmers preferentially drain flows with lower sediment concentrations. These "physical" enhancement techniques are described in this fact sheet. To further enhance sediment removal particularly at sites with fine soils or turbidity sensitive receiving waters, some projects may need to consider implementing Active Treatment Systems (ATS) whereby coagulants and flocculants are used to enhance settling and removal of suspended sediments. Guidance on implementing ATS is provided in SE-11.

Suitable Applications

Sediment basins may be suitable for use on larger projects with sufficient space for constructing the basin. Sediment basins should be considered for use:

- Where sediment-laden water may enter the drainage system or watercourses
- On construction projects with disturbed areas during the rainy season
- At the outlet of disturbed watersheds between 5 acres and 75 acres and evaluated on a site by site basis
- Where post construction detention basins are required
- In association with dikes, temporary channels, and pipes used to convey runoff from disturbed areas

Limitations

Sediment basins must be installed only within the property limits and where failure of the structure will not result in loss of life, damage to homes or buildings, or interruption of use or service of public roads or utilities. In addition, sediment basins are attractive to children and can be very dangerous. Local ordinances regarding health and safety must be adhered to. If fencing of the basin is required, the type of fence and its location should be shown in the SWPPP and in the construction specifications.

- As a general guideline, sediment basins are suitable for drainage areas of 5 acres or more, but not appropriate for drainage areas greater than 75 acres. However, the tributary area should be evaluated on a site by site basis.
- Sediment basins may become an "attractive nuisance" and care must be taken to adhere to all safety practices. If safety is a concern, basin may require protective fencing.
- Sediment basins designed according to this fact sheet are only effective in removing sediment down to about the silt size fraction. Sediment-laden runoff with smaller size fractions (fine silt and clay) may not be adequately treated unless chemical (or other appropriate method) treatment is used in addition to the sediment basin.
- Basins with a height of 25 ft or more or an impounding capacity of 50 ac-ft or more must obtain approval from California Department of Water Resources Division of Safety of Dams (http://www.water.ca.gov/damsafety/).

- Water that stands in sediment basins longer than 96 hours may become a source of mosquitoes (and midges), particularly along perimeter edges, in shallow zones, in scour or below-grade pools, around inlet pipes, along low-flow channels, and among protected habitats created by emergent or floating vegetation (e.g. cattails, water hyacinth), algal mats, riprap, etc.

- Basins require large surface areas to permit settling of sediment. Size may be limited by the available area.

Implementation

General

A sediment basin is a controlled stormwater release structure formed by excavation or by construction of an embankment of compacted soil across a drainage way, or other suitable location. It is intended to trap sediment before it leaves the construction site. The basin is a temporary measure expected to be used during active construction in most cases and is to be maintained until the site area is permanently protected against erosion or a permanent detention basin is constructed.

Sediment basins are suitable for nearly all types of construction projects. Whenever possible, construct the sediment basins before clearing and grading work begins. Basins should be located at the stormwater outlet from the site but not in any natural or undisturbed stream. A typical application would include temporary dikes, pipes, and/or channels to convey runoff to the basin inlet.

Many development projects in California are required by local ordinances to provide a stormwater detention basin for post-construction flood control, desilting, or stormwater pollution control. A temporary sediment basin may be constructed by rough grading the post-construction control basins early in the project.

Sediment basins if properly designed and maintained can trap a significant amount of the sediment that flows into them. However, traditional basins do not remove all inflowing sediment. Therefore, they should be used in conjunction with erosion control practices such as temporary seeding, mulching, diversion dikes, etc., to reduce the amount of sediment flowing into the basin.

Planning

To improve the effectiveness of the basin, it should be located to intercept runoff from the largest possible amount of disturbed area. Locations best suited for a sediment basin are generally in lower elevation areas of the site (or basin tributary area) where site drainage would not require significant diversion or other means to direct water to the basin but outside jurisdictional waterways. However, as necessary, drainage into the basin can be improved by the use of earth dikes and drainage swales (see BMP EC-9). . The basin should not be located where its failure would result in the loss of life or interruption of the use or service of public utilities or roads.

Construct before clearing and grading work begins when feasible.

- Do not locate the basin in a jurisdictional stream.

- Basin sites should be located where failure of the structure will not cause loss of life, damage to homes or buildings, or interruption of use or service of public roads or utilities.
- Basins with a height of 25 ft or more or an impounding capacity of 50 ac-ft must obtain approval from the Division of Dam Safety. Local dam safety requirements may be more stringent.
- Limit the contributing area to the sediment basin to only the runoff from the disturbed soil areas. Use temporary concentrated flow conveyance controls to divert runoff from undisturbed areas away from the sediment basin.
- The basin should be located: (1) by excavating a suitable area or where a low embankment can be constructed across a swale, (2) where post-construction (permanent) detention basins will be constructed, and (3) where the basins can be maintained on a year-round basis to provide access for maintenance, including sediment removal and sediment stockpiling in a protected area, and to maintain the basin to provide the required capacity.

Design

When designing a sediment basin, designers should evaluate the site constraints that could affect the efficiency of the BMP. Some of these constraints include: the relationship between basin capacity, anticipated sediment load, and freeboard, available footprint for the basin, maintenance frequency and access, and hydraulic capacity and efficiency of the temporary outlet infrastructure. Sediment basins should be designed to maximize sediment removal and to consider sediment load retained by the basin as it affects basin performance.

Three Basin Design Options (Part A) are presented below along with a Typical Sediment/Detention Basin Design Methodology (Part B). Regardless of the design option that is selected, designers also need to evaluate the sediment basin capacity with respect to sediment accumulation (See "*Step 3. Evaluate the Capacity of the Sediment Basin*"), and should incorporate approaches identified in "*Step 4. Other Design Considerations*" to enhance basin performance.

A) Basin Design Options:

Option 1:

Design sediment basin(s) using the standard equation:

$$A_s = \frac{1.2Q}{V_s} \qquad \text{(Eq. 1)}$$

Where:

A_s = Minimum surface area for trapping soil particles of a certain size

V_s = Settling velocity of the design particle size chosen (V_s = 0.00028 ft/s for a design particle size of 0.01 mm at 68°F)

1.2 = Factor of safety recommended by USEPA to account for the reduction in basin efficiency caused due to turbulence and other non ideal conditions.

$Q = CIA$ (Eq.2)

Where

Q = Discharge rate measured in cubic feet per second

C = Runoff coefficient (unitless)

I = Peak rainfall intensity for the 10-year, 6-hour rain event (in/hr)

A = Area draining into the sediment basin in acres

The design particle size should be the smallest soil grain size determined by wet sieve analysis, or the fine silt sized (0.01 mm [or 0.0004 in.]) particle, and the Vs used should be 100 percent of the calculated settling velocity.

This sizing basin method is dependent on the outlet structure design or the total basin length with an appropriate outlet. If the designer chooses to utilize the outlet structure to control the flow duration in the basin, the basin length (distance between the inlet and the outlet) should be a minimum of twice the basin width; the depth should not be less than 3 ft nor greater than 5 ft for safety reasons and for maximum efficiency (2 ft of sediment storage, 2 ft of capacity). If the designer chooses to utilize the basin length (with appropriate basin outlet) to control the flow duration in the basin, the basin length (distance between the inlet and the outlet) should be a specifically designed to capture 100% of the design particle size; the depth should not be less than 3 ft nor greater than 5 ft for safety reasons and for maximum efficiency (2 ft of sediment storage, 2 ft of capacity).

The basin should be located on the site where it can be maintained on a year-round basis and should be maintained on a schedule to retain the 2 ft of capacity.

Option 2:

Design pursuant to local ordinance for sediment basin design and maintenance, provided that the design efficiency is as protective or more protective of water quality than Option 1.

Option 3:

The use of an equivalent surface area design or equation provided that the design efficiency is as protective or more protective of water quality than Option 1.

B) Typical Sediment/Detention Basin Design Methodology:

Design of a sediment basin requires the designer to have an understanding of the site constraints, knowledge of the local soil (e.g., particle size distribution of potentially contributing soils), drainage area of the basin, and local hydrology. Designers should not assume that a sediment basin for location A is applicable to location B. Therefore, designers can use this factsheet as guidance but will need to apply professional judgment and knowledge of the site to design an effective and efficient sediment basin. The following provides a general overview of typical design methodologies:

Step 1. Hydrologic Design

- Evaluate the site constraints and assess the drainage area for the sediment basin. Designers should consider on- and off-site flows as well as changes in the drainage area associated with site construction/disturbance. To minimize additional construction during the course of the project, the designer should consider identifying the maximum drainage area when calculating the basin dimensions.

- If a local hydrology manual is not available it is recommended to follow standard rational method procedures to estimate discharge. The references section of this factsheet provides a reference to standard hydrology textbooks that can provide standard methodologies. If local rainfall depths are not available, values can be obtained from standard precipitation frequency maps from NOAA (downloaded from http://www.wrcc.dri.edu/pcpnfreq.html).

Step 2. Hydraulic Design

- Calculate the surface area required for the sediment basin using Equation 1. In which discharge is estimated for a 10-yr 6-hr event using rational method procedure listed in local hydrology manual and Vs is estimated using Stokes Law presented in Equation 3.

$$V_s = 2.81d^2 \qquad \text{(Eq.3)}$$

Where

V_s = Settling velocity in feet per second at 68°F

d = diameter of sediment particle in millimeters (smallest soil grain size determined by wet sieve analysis or fine silt (0.01 mm [or 0.0004 in.])

- In general the basin outlet design requires an iterative trial and error approach that considered the maximum water surface elevation, the elevation versus volume (stage-storage) relationship, the elevation verses discharge (stage-discharge) relationship, and the estimated inflow hydrograph. To adequately design the basins to settle sediment, the outlet configuration and associated outflow rates can be estimated by numerous methodologies. The following provides some guidance for design the basin outlet:
  - An outlet should have more than one orifice.
  - An outlet design typically utilizes multiple horizontal rows of orifices (approximately 3 or more) with at least 2 orifices per row (see Figures 1 and 2 at the end of this fact sheet).
  - Orifices can vary in shape.
  - Select the appropriate orifice diameter and number of perforations per row with the objective of minimizing the number of rows while maximizing the detention time.

- The diameter of each orifice is typically a maximum of 3-4 inches and a minimum of 0.25-0.5 inches.
- If a rectangular orifice is used, it is recommended to have minimum height of 0.5 inches and a maximum height of 6 inches.
- Rows are typically spaced at three times the diameter center to center vertically with a minimum distance of approximately 4 inches on center and a maximum distance of 1 foot on center.
- To estimate the outflow rate, each row is calculated separately based on the flow through a single orifice then multiplied by the number of orifices in the row. This step is repeated for each of the rows. Once all of the orifices are estimated, the total outflow rate versus elevation (stage-discharge curve) is developed to evaluate the detention time within the basin.
- Flow through a single orifice can be estimated using an Equation 4:

$$Q = BC' A(2gH)^{0.5} \qquad \text{(Eq.4)}$$

Where
Q = Discharge in ft^3/s
C′ = Orifice coefficient (unitless)
A = Area of the orifice (ft^2)
g = acceleration due to gravity (ft^3/s)
H = Head above the orifice (ft)
B = Anticipated Blockage or clogging factor (unitless), It is dependent on anticipated sediment and debris load, trash rack configuration etc, so the value is dependent on design engineers professional judgment and/or local requirements (B is never greater than 1 and a value of 0.5 is generally used)

- Care must be taken in the selection of orifice coefficient ("C′"); 0.60 is most often recommended and used. However, based on actual tests, Young and Graziano (1989), "Outlet Hydraulics of Extended Detention Facilities for Northern Virginia Planning District Commission", recommends the following:
  - C′ = 0.66 for thin materials; where the thickness is equal to or less than the orifice diameter, or
  - C′ = 0.80 when the material is thicker than the orifice diameter
- If different sizes of orifices are used along the riser then they have to be sized such that not more than 50 percent of the design storm event drains in one-third of the drawdown time (to provide adequate settling time for events smaller than the design storm event) and the entire volume drains within 96 hours or as regulated by the local vector control agency. If a basin fails to drain within 96 hours, the basin must be pumped dry.

- Because basins are not maintained for infiltration, water loss by infiltration should be disregarded when designing the hydraulic capacity of the outlet structure.

- Floating Outlet Skimmer: The floating skimmer (see Figure 3 at the end of this fact sheet is an alternative outlet configuration (patented) that drains water from upper portion of the water column. This configuration has been used for temporary and permanent basins and can improve basin performance by eliminating bottom orifices which have the potential of discharging solids. Some design considerations for this alternative outlet device includes the addition of a sand filter or perforated under drain at the low point in the basin and near the floating skimmer. These secondary drains allow the basin to fully drain. More detailed guidelines for sizing the skimmer can be downloaded from http://www.fairclothskimmer.com/.

- Hold and Release Valve: An ideal sediment/detention basin would hold all flows to the design storm level for sufficient time to settle solids, and then slowly release the storm water. Implementing a reliable valve system for releasing detention basins is critical to eliminate the potential for flooding in such a system. Some variations of hold and release valves include manual valves, bladder devices or electrically operated valves. When a precipitation event is forecast, the valve would be close for the duration of the storm and appropriate settling time. When the settling duration is met (approximately 24 or 48 hours), the valve would be opened and allow the stormwater to be discharged at a rate that does not resuspend settled solids and in a non-erosive manner. If this type of system is used the valve should be designed to empty the entire basin within 96 hours or as stipulated by local vector control regulations.

Step 3. Evaluate the Capacity of the Sediment Basin

- Typically, sediment basins do not perform as designed when they are not properly maintained or the sediment yield to the basin is larger than expected. As part of a good sediment basin design, designers should consider maintenance cycles, estimated soil loss and/or sediment yield, and basin sediment storage volume. The two equations below can be used to quantify the amount of soil entering the basin.

- The Revised Universal Soil Loss Equation (RUSLE, Eq.5) can be used to estimate annual soil loss and the Modified Universal Soil Equation (MUSLE, Eq.6) can be used to estimate sediment yield from a single storm event.

$$A = R \times K \times LS \times C \times P \qquad \text{(Eq.5)}$$

$$Y = 95\left(Q \times q_p\right)^{0.56} \times K \times LS \times C \times P \qquad \text{(Eq.6)}$$

Where:

A = annual soil loss, tons/acre-year

R = rainfall erosion index, in 100 ft.tons/acre.in/hr

K = soil erodibility factor, tons/acre per unit of R

LS = slope length and steepness factor (unitless)

C = vegetative cover factor (unitless)

P = erosion control practice factor (unitless)

Y = single storm sediment yield in tons

Q = runoff volume in acre-feet

q_p = peak flow in cfs

- Detailed descriptions and methodologies for estimating the soil loss can be obtained from standard hydrology text books (See References section).
- Determination of the appropriate equation should consider construction duration and local environmental factors (soils, hydrology, etc.). For example, if a basin is planned for a project duration of 1 year and the designer specifies one maintenance cycle, RUSLE could be used to estimate the soil loss and thereby the designer could indicate that the sediment storage volume would be half of the soil loss value estimated. As an example for use of MUSLE, a project may have a short construction duration thereby requiring fewer maintenance cycles and a reduced sediment storage volume. MUSLE would be used to estimate the anticipated soil loss based on a specific storm event to evaluate the sediment storage volume and appropriate maintenance frequency.
- The soil loss estimates are an essential step in the design and it is essential that the designer provide construction contractors with enough information to understand maintenance frequency and/or depths within the basin that would trigger maintenance. Providing maintenance methods, frequency and specification should be included in design bid documents such as the SWPPP Site Map.
- Once the designer has quantified the amount of soil entering the basin, the depth required for sediment storage can be determined by dividing the estimated sediment loss by the surface area of the basin.

Step 4. Other Design Considerations

- Consider designing the volume of the settling zone for the total storm volume associated with the 2-year event or other appropriate design storms specified by the local agency. This volume can be used as a guide for sizing the basin without iterative routing calculations. The depth of the settling zone can be estimated by dividing the estimated 2-yr storm volume by the surface area of the basin.
- The basin volume consists of two zones:
  - A sediment storage zone at least 1 ft deep.
  - A settling zone at least 2 ft deep.
  - The basin depth must be no less than 3 ft (not including freeboard).
- Proper hydraulic design of the outlet is critical to achieving the desired performance of the basin. The outlet should be designed to drain the basin within 24 to 96 hours (also referred

to as "drawdown time"). The 24-hour limit is specified to provide adequate settling time; the 96-hour limit is specified to mitigate vector control concerns.

- Confirmation of the basin performance can be evaluated by routing the design storm (10-yr 6-hr, or as directed by local regulations) through the basin based on the basin volume (stage-storage curve) and the outlet design (stage-discharge curve based on the orifice configuration or equivalent outlet design).

- Sediment basins, regardless of size and storage volume, should include features to accommodate overflow or bypass flows that exceed the design storm event.
  - Include an emergency spillway to accommodate flows not carried by the principal spillway. The spillway should consist of an open channel (earthen or vegetated) over undisturbed material (not fill) or constructed of a non-erodible riprap (or equivalent protection) on fill slopes.
  - The spillway control section, which is a level portion of the spillway channel at the highest elevation in the channel, should be a minimum of 20 ft in length.
- Rock, vegetation or appropriate erosion control should be used to protect the basin inlet, outlet, and slopes against erosion.

- The total depth of the sediment basin should include the depth required for sediment storage, depth required for settling zone and freeboard of at least 1 foot or as regulated by local flood control agency for a flood event specified by the local agency.

- The basin alignment should be designed such that the length of the basin is more than twice the width of the basin; the length should be determined by measuring the distance between the inlet and the outlet. If the site topography does not allow for this configuration baffles should be installed so that the ratio is satisfied. If a basin has more than one inflow point, any inflow point that conveys more than 30 percent of the total peak inflow rate has to meet the required length to width ratio.

- An alternative basin sizing method proposed by Fifield (2004) can be consulted to estimate an alternative length to width ratio and basin configuration. These methods can be considered as part of Option 3 which allows for alternative designs that are protective or more protective of water quality.

- Baffles (see Figure 4 at the end of this fact sheet) can be considered at project sites where the existing topography or site constraints limit the length to width ratio. Baffles should be constructed of earthen berms or other structural material within the basin to divert flow in the basin, thus increasing the effective flow length from the basin inlet to the outlet riser. Baffles also reduce the change of short circuiting and allows for settling throughout the basin.

- Baffles are typically constructed from the invert of the basin to the crest of the emergency spillway (i.e., design event flows are meant to flow around the baffles and flows greater than the design event would flow over the baffles to the emergency spillway).

- Use of other materials for construction of basin baffles (such as silt fence) may not be appropriate based on the material specifications and will require frequent maintenance (maintain after every storm event). Maintenance may not be feasible when required due to flooded conditions resulting from frequent (i.e., back to back) storm events. Use of alternative baffle materials should not deviate from the intended purpose of the material, as described by the manufacturer.
- Sediment basins are best used in conjunction with erosion controls.
- Basins with an impounding levee greater than 4.5 ft tall, measured from the lowest point to the impounding area to the highest point of the levee, and basins capable of impounding more than 35,000 ft^3, should be designed by a Registered Civil Engineer. The design should include maintenance requirements, including sediment and vegetation removal, to ensure continuous function of the basin outlet and bypass structures.
- A forebay, constructed upstream of the basin may be provided to remove debris and larger particles.
- The outflow from the sediment basin should be provided with velocity dissipation devices (see BMP EC-10) to prevent erosion and scouring of the embankment and channel.
- The principal outlet should consist of a corrugated metal, high density polyethylene (HDPE), or reinforced concrete riser pipe with dewatering holes and an anti-vortex device and trash rack attached to the top of the riser, to prevent floating debris from flowing out of the basin or obstructing the system. This principal structure should be designed to accommodate the inflow design storm.
- A rock pile or rock-filled gabions can serve as alternatives to the debris screen, although the designer should be aware of the potential for extra maintenance involved should the pore spaces in the rock pile clog.
- The outlet structure should be placed on a firm, smooth foundation with the base securely anchored with concrete or other means to prevent floatation.
- Attach riser pipe (watertight connection) to a horizontal pipe (barrel). Provide anti-seep collars on the barrel.
- Cleanout level should be clearly marked on the riser pipe.

Installation

- Securely anchor and install an anti-seep collar on the outlet pipe/riser and provide an emergency spillway for passing major floods (see local flood control agency).
- Areas under embankments must be cleared and stripped of vegetation.
- Chain link fencing should be provided around each sediment basin to prevent unauthorized entry to the basin or if safety is a concern.

Costs

The cost of a sediment basin is highly variable and is dependent of the site configuration. To decrease basin construction costs, designers should consider using existing site features such as berms or depressed area to site the sediment basin. Designers should also consider potential savings associated with designing the basin to minimize the number of maintenance cycles and siting the basin in a location where a permanent BMP (e.g., extended detention basin) is required for the project site.

Inspection and Maintenance

- BMPs must be inspected in accordance with General Permit requirements for the associated project type and risk level and as required by local requirements. It is recommended that at a minimum, basins be inspected weekly, prior to forecasted rain events, daily during extended rain events, and after the conclusion of rain events.
- Examine basin banks for seepage and structural soundness.
- Check inlet and outlet structures and spillway for any damage or obstructions. Repair damage and remove obstructions as needed.
- Check inlet and outlet area for erosion and stabilize if required.
- Check fencing for damage and repair as needed.
- Sediment that accumulates in the basin must be periodically removed in order to maintain BMP effectiveness. Sediment should be removed when sediment accumulation reaches one-half the designated sediment storage volume. Sediment removed during maintenance should be managed properly. The sediment should be appropriately evaluated and used or disposed of accordingly. Options include: incorporating sediment into earthwork on the site (only if there is no risk that sediment is contaminated); or off-site export/disposal at an appropriate location (e.g., sediment characterization and disposal to an appropriate landfill).
- Remove standing water from basin within 96 hours after accumulation.
- If the basin does not drain adequately (e.g., due to storms that are more frequent or larger than the design storm or other unforeseen site conditions), dewatering should be conducted in accordance with appropriate dewatering BMPs (see NS-2) and in accordance with local permits as applicable.
- To minimize vector production:
  - Remove accumulation of live and dead floating vegetation in basins during every inspection.
  - Remove excessive emergent and perimeter vegetation as needed or as advised by local or state vector control agencies.

References

A Current Assessment of Urban Best Management Practices: Techniques for Reducing Nonpoint Source Pollution in the Coastal Zones, Metropolitan Washington Council of Governments, March 1992.

Draft-Sedimentation and Erosion Control, an Inventory of Current Practices, USEPA. April 1990.

U.S. Environmental Protection Agency (USEPA). Erosion and Sediment Control, Surface Mining in the Eastern U.S., U.S. Environmental Protection Agency, Office of Water, Washington, DC,Washington, D.C., 1976.

Fifield, J.S. Designing for Effective Sediment and Erosion Control on Construction Sites. Forester Press, Santa Barbara, CA. 2004.

Goldman S.J., Jackson K. and Bursztynsky T.A. Erosion and Sediment Control Handbook. McGraw-Hill Book Company, 1986.

U.S. Environmental Protection Agency (USEPA). Guidance Specifying Management Measures for Nonpoint Pollution in Coastal Waters. EPA 840-B-9-002. U.S. Environmental Protection Agency, Office of Water, Washington, DC, 1993.

Guidelines for the Design and Construction of Small Embankment Dams, Division of Safety of Dams, California Department of Water Resources, March 1986.

Haan C.T., Barfield B.J. and Hayes J.C. Design Hydrology and Sedimentology for Small Catchments. Academic Press. 1994.

Inlet/Outlet Alternatives for Extended Detention Basins. State of California Department of Transportation (Caltrans), 2001.

Manual of Standards of Erosion and Sediment Control Measures, Association of Bay Area Governments, May 1995.

McLean, J., 2000. Mosquitoes in Constructed Wetlands: A Management Bugaboo? In T.R. Schueler and H.K. Holland [eds.], The Practice of Watershed Protection. pp. 29-33. Center for Watershed Protection, Ellicott City, MD, 2000.

Metzger, M.E., D. F. Messer, C. L. Beitia, C. M. Myers, and V. L. Kramer. The Dark Side of Stormwater Runoff Management: Disease Vectors Associated with Structural BMPs, 2002.

National Management Measures to Control Nonpoint Source Pollution from Urban Areas, United States Environmental Protection Agency, 2002.

Proposed Guidance Specifying Management Measures for Sources of Nonpoint Pollution in Coastal Water, Work Group-Working Paper, USEPA, April 1992.

Stormwater Management of the Puget Sound Basin, Technical Manual, Publication #91-75, Washington State Department of Ecology, February 1992.

Stormwater Quality Handbooks - Construction Site Best Management Practices (BMPs) Manual, State of California Department of Transportation (Caltrans), November 2000.

Water Quality Management Plan for the Lake Tahoe Region, Volume II Handbook of Management Practices, Tahoe Regional Planning Agency, November 1988.

Young, G.K. and Graziano, F., Outlet Hydraulics of Extended Detention Facilities for Northern Virginia Planning District Commission, 1989.

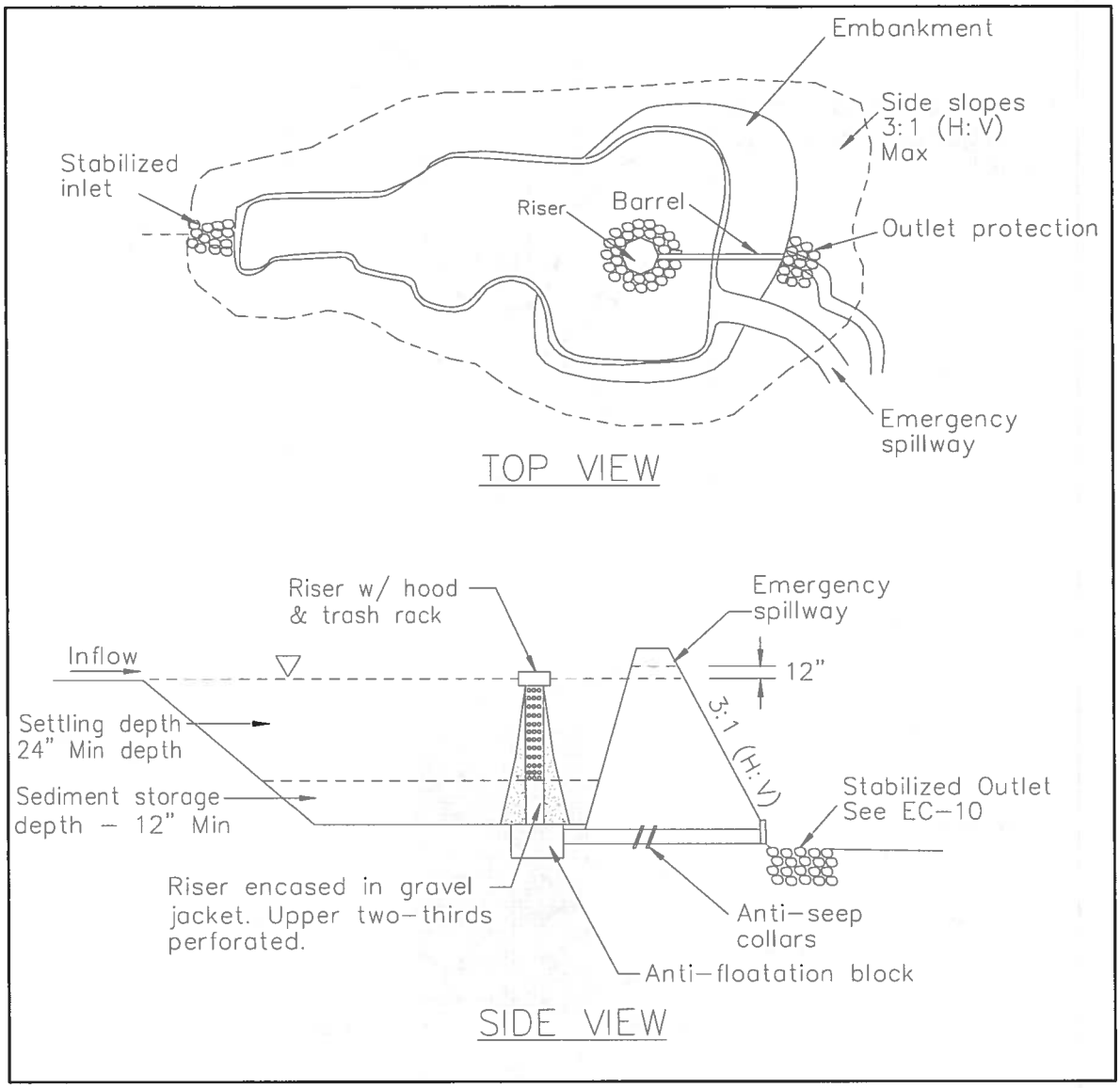

FIGURE 1: TYPICAL TEMPORARY SEDIMENT BASIN
MULTIPLE ORIFICE DESIGN
NOT TO SCALE

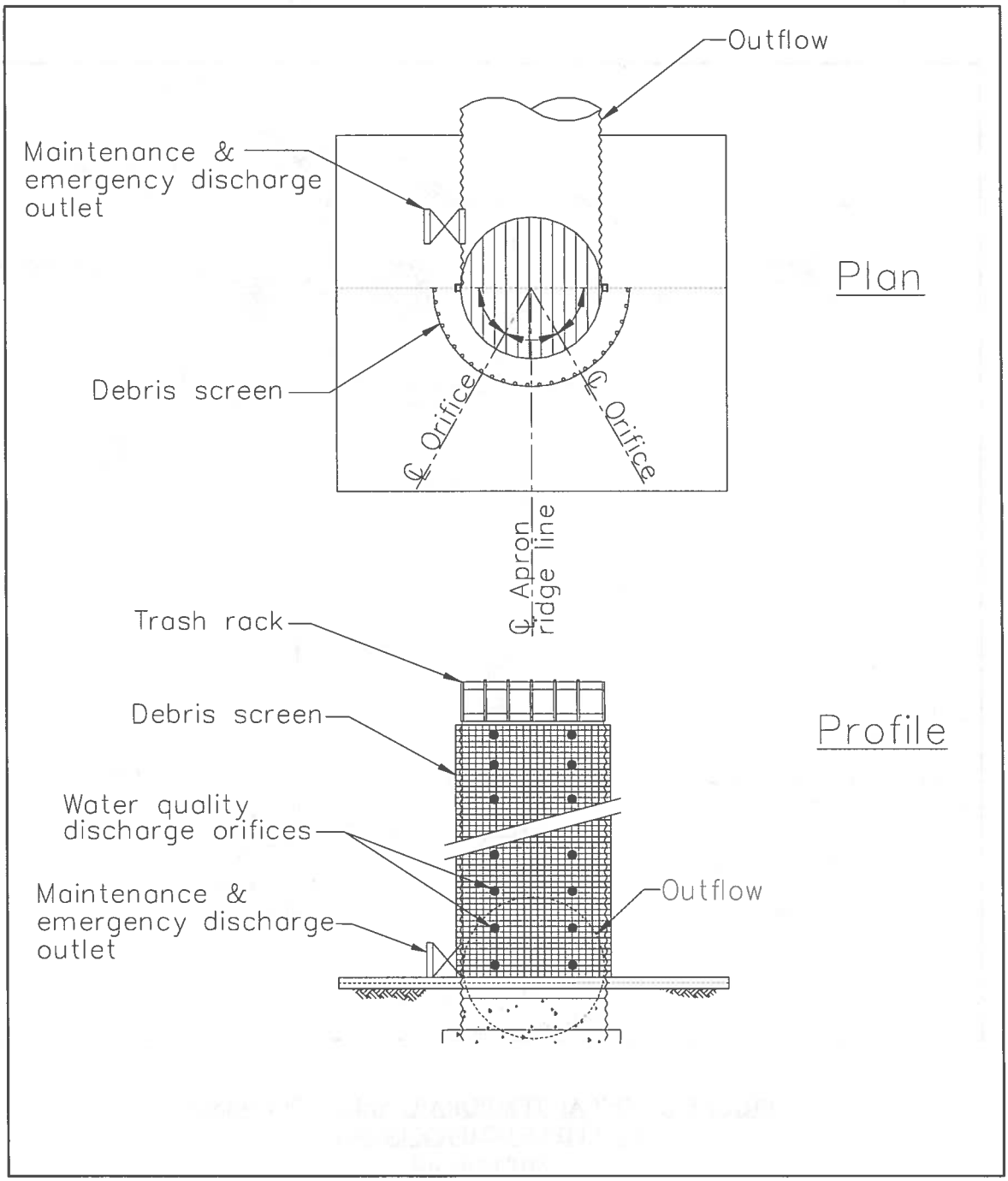

FIGURE 2: MULTIPLE ORIFICE OUTLET RISER
NOT TO SCALE

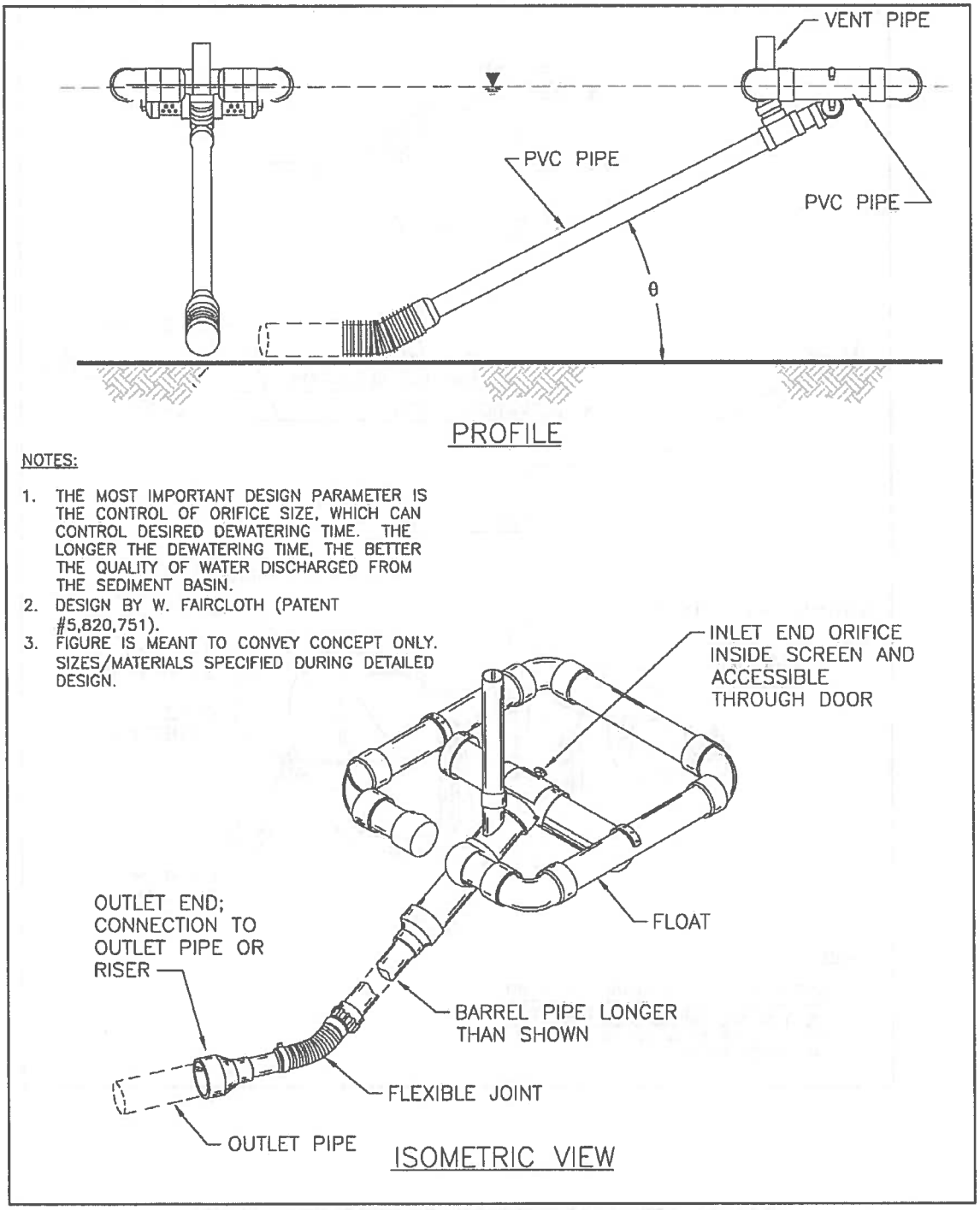

FIGURE 3: TYPICAL SKIMMER

NOT TO SCALE

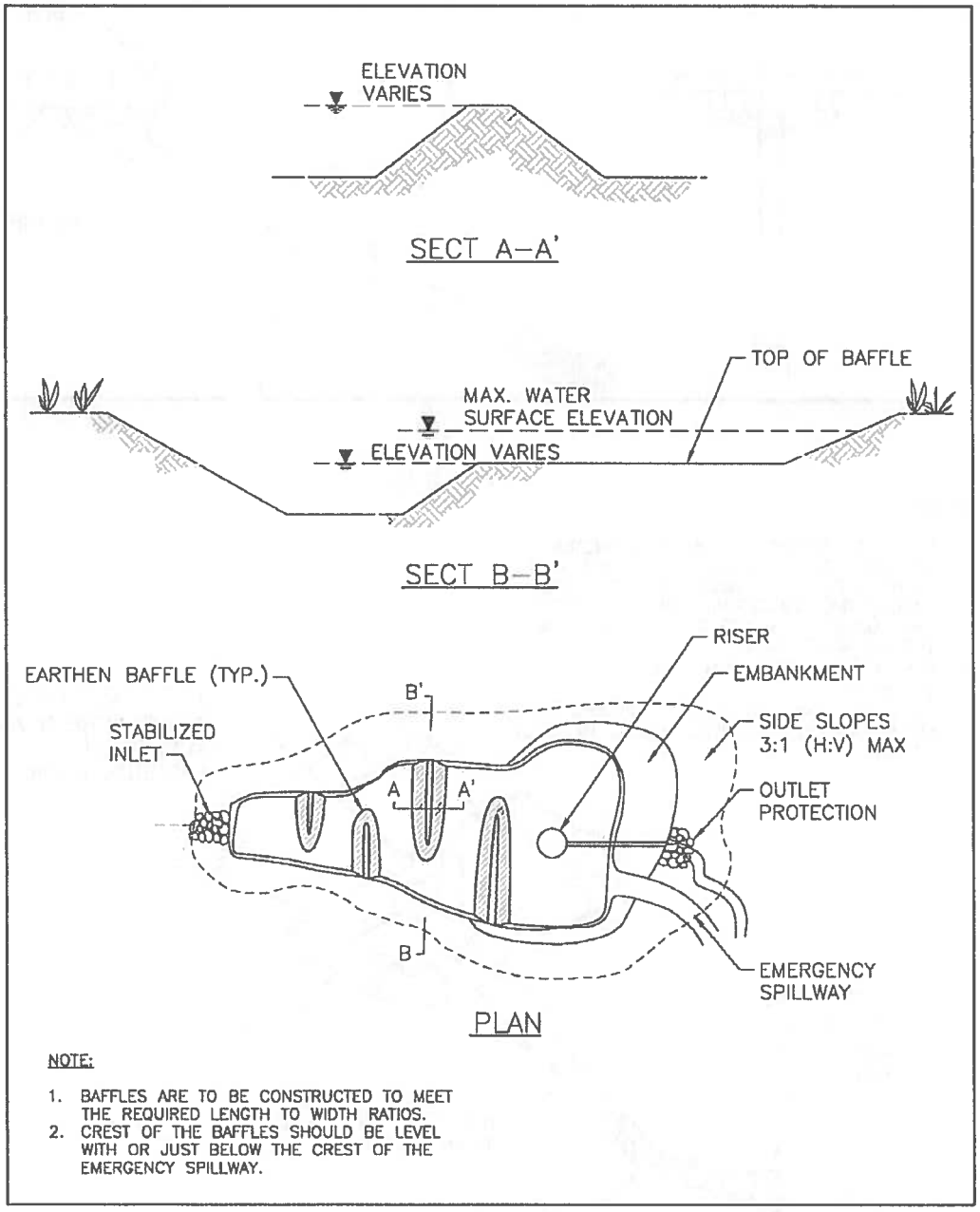

FIGURE 4: TYPICAL TEMPORARY SEDIMENT BASIN WITH BAFFLES

NOT TO SCALE

Sediment Trap SE-3

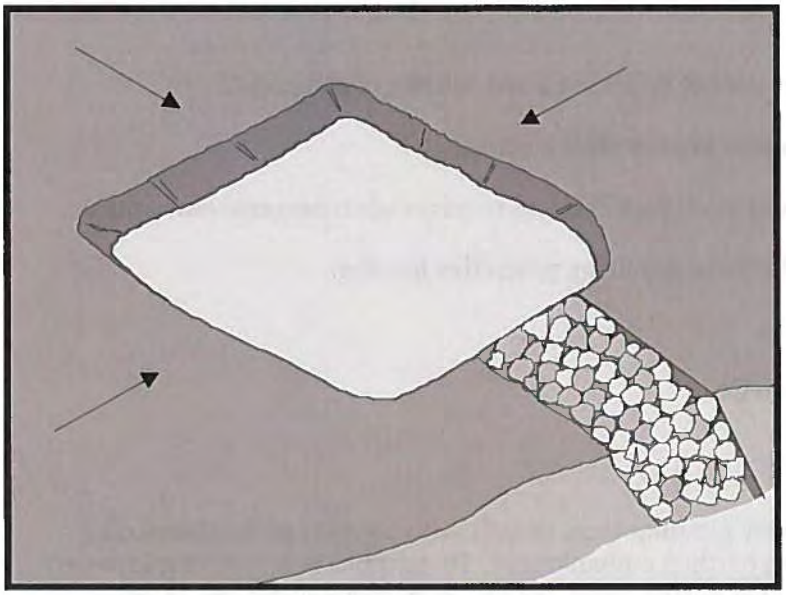

Description and Purpose

A sediment trap is a containment area where sediment-laden runoff is temporarily detained under quiescent conditions, allowing sediment to settle out or before the runoff is discharged. Sediment traps are formed by excavating or constructing an earthen embankment across a waterway or low drainage area.

Suitable Applications

Sediment traps should be considered for use:

- At the perimeter of the site at locations where sediment-laden runoff is discharged offsite.
- At multiple locations within the project site where sediment control is needed.
- Around or upslope from storm drain inlet protection measures.
- Sediment traps may be used on construction projects where the drainage area is less than 5 acres. Traps would be placed where sediment-laden stormwater may enter a storm drain or watercourse. SE-2, Sediment Basins, must be used for drainage areas greater than 5 acres.
- As a supplemental control, sediment traps provide additional protection for a water body or for reducing sediment before it enters a drainage system.

Categories

EC	Erosion Control	
SE	Sediment Control	☑
TC	Tracking Control	
WE	Wind Erosion Control	
NS	Non-Stormwater Management Control	
WM	Waste Management and Materials Pollution Control	

Legend:

☑ **Primary Objective**

☒ **Secondary Objective**

Targeted Constituents

Sediment	☑
Nutrients	
Trash	☑
Metals	
Bacteria	
Oil and Grease	
Organics	

Potential Alternatives

SE-2 Sediment Basin (for larger areas)

CASQA
CALIFORNIA STORMWATER QUALITY ASSOCIATION

Limitations

- Requires large surface areas to permit infiltration and settling of sediment.
- Not appropriate for drainage areas greater than 5 acres.
- Only removes large and medium sized particles and requires upstream erosion control.
- Attractive and dangerous to children, requiring protective fencing.
- Conducive to vector production.
- Should not be located in live streams.

Implementation

Design

A sediment trap is a small temporary ponding area, usually with a gravel outlet, formed by excavation or by construction of an earthen embankment. Its purpose is to collect and store sediment from sites cleared or graded during construction. It is intended for use on small drainage areas with no unusual drainage features and projected for a quick build-out time. It should help in removing coarse sediment from runoff. The trap is a temporary measure with a design life of approximately six months to one year and is to be maintained until the site area is permanently protected against erosion by vegetation and/or structures.

Sediment traps should be used only for small drainage areas. If the contributing drainage area is greater than 5 acres, refer to SE-2, Sediment Basins, or subdivide the catchment area into smaller drainage basins.

Sediment usually must be removed from the trap after each rainfall event. The SWPPP should detail how this sediment is to be disposed of, such as in fill areas onsite, or removal to an approved offsite dump. Sediment traps used as perimeter controls should be installed before any land disturbance takes place in the drainage area.

Sediment traps are usually small enough that a failure of the structure would not result in a loss of life, damage to home or buildings, or interruption in the use of public roads or utilities. However, sediment traps are attractive to children and can be dangerous. The following recommendations should be implemented to reduce risks:

- Install continuous fencing around the sediment trap or pond. Consult local ordinances regarding requirements for maintaining health and safety.
- Restrict basin side slopes to 3:1 or flatter.

Sediment trap size depends on the type of soil, size of the drainage area, and desired sediment removal efficiency (see SE-2, Sediment Basin). As a rule of thumb, the larger the basin volume the greater the sediment removal efficiency. Sizing criteria are typically established under the local grading ordinance or equivalent. The runoff volume from a 2-year storm is a common design criteria for a sediment trap. The sizing criteria below assume that this runoff volume is 0.042 acre-ft/acre (0.5 in. of runoff). While the climatic, topographic, and soil type extremes make it difficult to establish a statewide standard, the following criteria should trap moderate to high amounts of sediment in most areas of California:

- Locate sediment traps as near as practical to areas producing the sediment.
- Trap should be situated according to the following criteria: (1) by excavating a suitable area or where a low embankment can be constructed across a swale, (2) where failure would not cause loss of life or property damage, and (3) to provide access for maintenance, including sediment removal and sediment stockpiling in a protected area.
- Trap should be sized to accommodate a settling zone and sediment storage zone with recommended minimum volumes of 67 yd^3/acre and 33 yd^3/acre of contributing drainage area, respectively, based on 0.5 in. of runoff volume over a 24-hour period. In many cases, the size of an individual trap is limited by available space. Multiple traps or additional volume may be required to accommodate specific rainfall, soil, and site conditions.
- Traps with an impounding levee greater than 4.5 ft tall, measured from the lowest point to the impounding area to the highest point of the levee, and traps capable of impounding more than 35,000 ft^3, should be designed by a Registered Civil Engineer. The design should include maintenance requirements, including sediment and vegetation removal, to ensure continuous function of the trap outlet and bypass structures.
- The outlet pipe or open spillway must be designed to convey anticipated peak flows.
- Use rock or vegetation to protect the trap outlets against erosion.
- Fencing should be provided to prevent unauthorized entry.

Installation

Sediment traps can be constructed by excavating a depression in the ground or creating an impoundment with a small embankment. Sediment traps should be installed outside the area being graded and should be built prior to the start of the grading activities or removal of vegetation. To minimize the area disturbed by them, sediment traps should be installed in natural depressions or in small swales or drainage ways. The following steps must be followed during installation:

- The area under the embankment must be cleared, grubbed, and stripped of any vegetation and root mat. The pool area should be cleared.
- The fill material for the embankment must be free of roots or other woody vegetation as well as oversized stones, rocks, organic material, or other objectionable material. The embankment may be compacted by traversing with equipment while it is being constructed.
- All cut-and-fill slopes should be 3:1 or flatter.
- When a riser is used, all pipe joints must be watertight.
- When a riser is used, at least the top two-thirds of the riser should be perforated with 0.5 in. diameter holes spaced 8 in. vertically and 10 to 12 in. horizontally. See SE-2, Sediment Basin.
- When an earth or stone outlet is used, the outlet crest elevation should be at least 1 ft below the top of the embankment.

- When crushed stone outlet is used, the crushed stone used in the outlet should meet AASHTO M43, size No. 2 or 24, or its equivalent such as MSHA No. 2. Gravel meeting the above gradation may be used if crushed stone is not available.

Costs

Average annual cost per installation and maintenance (18 month useful life) is $0.73 per ft^3 ($1,300 per drainage acre). Maintenance costs are approximately 20% of installation costs.

Inspection and Maintenance

- Inspect BMPs prior to forecast rain, daily during extended rain events, after rain events, weekly during the rainy season, and at two-week intervals during the non-rainy season.
- Inspect outlet area for erosion and stabilize if required.
- Inspect trap banks for seepage and structural soundness, repair as needed.
- Inspect outlet structure and spillway for any damage or obstructions. Repair damage and remove obstructions as needed.
- Inspect fencing for damage and repair as needed.
- Inspect the sediment trap for area of standing water during every visit. Corrective measures should be taken if the BMP does not dewater completely in 72 hours or less to prevent vector production.
- Sediment that accumulates in the BMP must be periodically removed in order to maintain BMP effectiveness. Sediment should be removed when the sediment accumulation reaches one-third of the trap capacity. Sediment removed during maintenance may be incorporated into earthwork on the site or disposed of at an appropriate location.
- Remove vegetation from the sediment trap when first detected to prevent pools of standing water and subsequent vector production.
- BMPs that require dewatering shall be continuously attended while dewatering takes place. Dewatering BMPs shall be implemented at all times during dewatering activities.

References

Brown, W., and T. Schueler. The Economics of Stormwater BMPs in the Mid-Atlantic Region. Prepared for Chesapeake Research Consortium, Edgewater, MD, by the Center for Watershed Protection, Ellicott City, MD, 1997.

Draft – Sedimentation and Erosion Control, an Inventory of Current Practices, USEPA, April 1990.

Manual of Standards of Erosion and Sediment Control Measures, Association of Bay Area Governments, May 1995.

Metzger, M.E., D.F. Messer, C.L. Beitia, C.M. Myers, and V.L. Kramer, The Dark Side of Stormwater Runoff Management: Disease Vectors Associated with Structural BMPs, 2002.

National Management Measures to Control Nonpoint Source Pollution from Urban Areas, United States Environmental Protection Agency, 2002.

Proposed Guidance Specifying Management Measures for Sources of Nonpoint Pollution in Coastal Waters, Work Group-Working Paper, USEPA, April 1992.

Stormwater Quality Handbooks - Construction Site Best Management Practices (BMPs) Manual, State of California Department of Transportation (Caltrans), November 2000.

Stormwater Management Manual for The Puget Sound Basin, Washington State Department of Ecology, Public Review Draft, 1991.

U.S. Environmental Protection Agency (USEPA). Guidance Specifying Management Measures for Nonpoint Pollution in Coastal Waters. EPA 840-B-9-002. U.S. Environmental Protection Agency, Office of Water, Washington, DC, 1993.

Water Quality Management Plan for the Lake Tahoe Region, Volume II, Handbook of Management Practices, Tahoe Regional Planning Agency, November 1988.

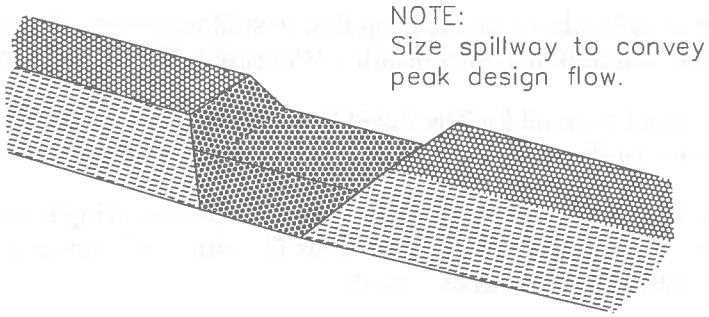

TYPICAL OPEN SPILLWAY

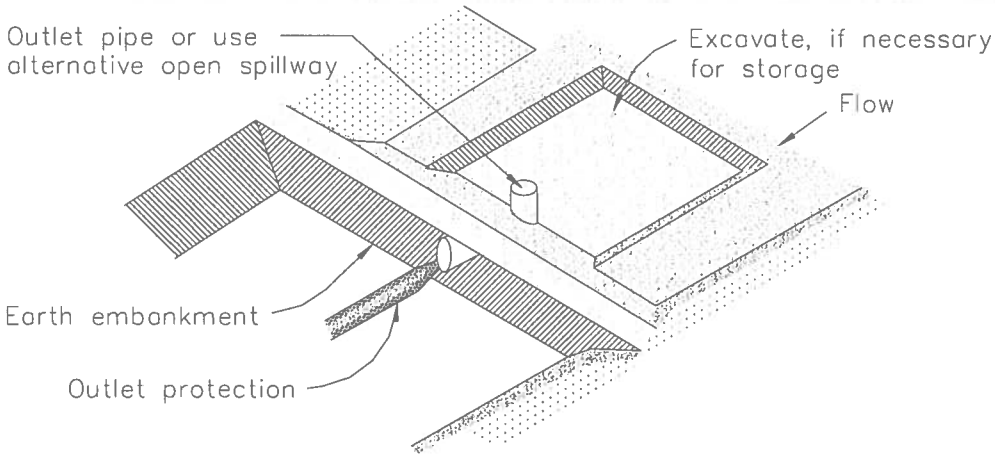

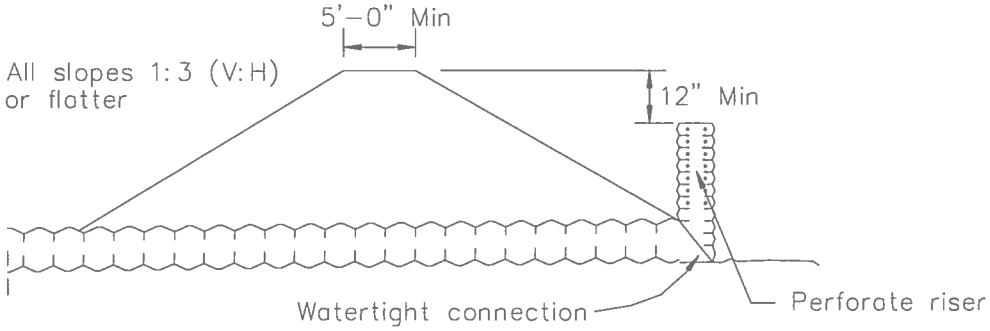

EMBANKMENT SECTION THRU RISER

TYPICAL SEDIMENT TRAP
NOT TO SCALE

Check Dams SE-4

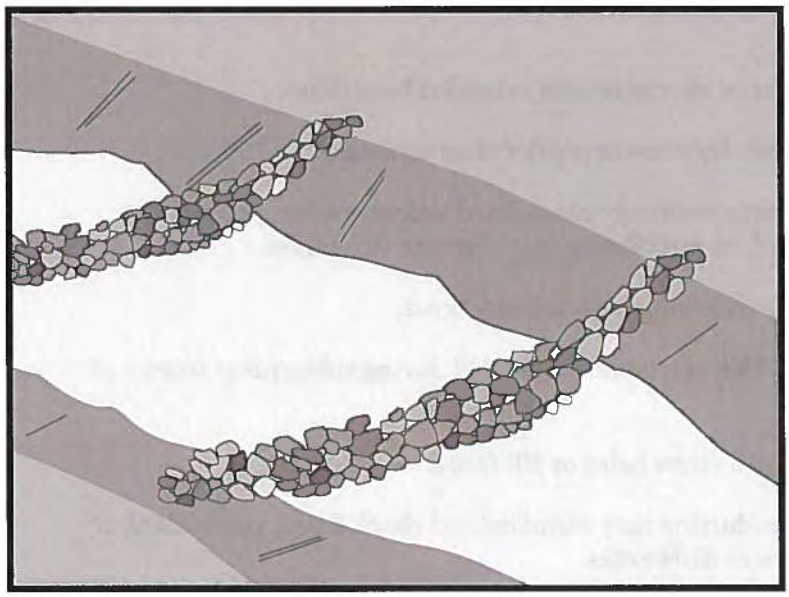

Description and Purpose

A check dam is a small barrier constructed of rock, gravel bags, sandbags, fiber rolls, or other proprietary products, placed across a constructed swale or drainage ditch. Check dams reduce the effective slope of the channel, thereby reducing scour and channel erosion by reducing flow velocity and increasing residence time within the channel, allowing sediment to settle.

Suitable Applications

Check dams may be appropriate in the following situations:

- To promote sedimentation behind the dam.
- To prevent erosion by reducing the velocity of channel flow in small intermittent channels and temporary swales.
- In small open channels that drain 10 acres or less.
- In steep channels where stormwater runoff velocities exceed 5 ft/s.
- During the establishment of grass linings in drainage ditches or channels.
- In temporary ditches where the short length of service does not warrant establishment of erosion-resistant linings.
- To act as a grade control structure.

Categories

EC	Erosion Control	☒
SE	Sediment Control	☑
TC	Tracking Control	
WE	Wind Erosion Control	
NS	Non-Stormwater Management Control	
WM	Waste Management and Materials Pollution Control	

Legend:

☑ **Primary Category**

☒ **Secondary Category**

Targeted Constituents

Sediment	☑
Nutrients	
Trash	
Metals	
Bacteria	
Oil and Grease	
Organics	

Potential Alternatives

SE-5 Fiber Rolls

SE-6 Gravel Bag Berm

SE-8 Sandbag Barrier

SE-14 Biofilter Bags

CASQA
CALIFORNIA STORMWATER QUALITY ASSOCIATION

Limitations

- Not to be used in live streams or in channels with extended base flows.
- Not appropriate in channels that drain areas greater than 10 acres.
- Not appropriate in channels that are already grass-lined unless erosion potential or sediment-laden flow is expected, as installation may damage vegetation.
- Require extensive maintenance following high velocity flows.
- Promotes sediment trapping which can be re-suspended during subsequent storms or removal of the check dam.
- Do not construct check dams with straw bales or silt fence.
- Water suitable for mosquito production may stand behind check dams, particularly if subjected to daily non-stormwater discharges.

Implementation

General

Check dams reduce the effective slope and create small pools in swales and ditches that drain 10 acres or less. Using check dams to reduce channel slope reduces the velocity of stormwater flows, thus reducing erosion of the swale or ditch and promoting sedimentation. Thus, check dams are dual-purpose and serve an important role as erosion controls as well as as sediment controls. Note that use of 1-2 isolated check dams for sedimentation will likely result in little net removal of sediment because of the small detention time and probable scour during longer storms. Using a series of check dams will generally increase their effectiveness. A sediment trap (SE-3) may be placed immediately upstream of the check dam to increase sediment removal efficiency.

Design and Layout

Check dams work by decreasing the effective slope in ditches and swales. An important consequence of the reduced slope is a reduction in capacity of the ditch or swale. This reduction in capacity should be considered when using this BMP, as reduced capacity can result in overtopping of the ditch or swale and resultant consequences. In some cases, such as a "permanent" ditch or swale being constructed early and used as a "temporary" conveyance for construction flows, the ditch or swale may have sufficient capacity such that the temporary reduction in capacity due to check dams is acceptable. When check dams reduce capacities beyond acceptable limits, either:

- Don't use check dams. Consider alternative BMPs, or.
- Increase the size of the ditch or swale to restore capacity.

Maximum slope and velocity reduction is achieved when the toe of the upstream dam is at the same elevation as the top of the downstream dam (see "Spacing Between Check Dams" detail at the end of this fact sheet). The center section of the dam should be lower than the edge sections (at least 6 inches), acting as a spillway, so that the check dam will direct flows to the center of

the ditch or swale (see "Typical Rock Check Dam" detail at the end of this fact sheet). Bypass or side-cutting can occur if a sufficient spillway is not provided in the center of the dam.

Check dams are usually constructed of rock, gravel bags, sandbags, and fiber rolls. A number of products can also be used as check dams (e.g. HDPE check dams, temporary silt dikes (SE-12)), and some of these products can be removed and reused. Check dams can also be constructed of logs or lumber, and have the advantage of a longer lifespan when compared to gravel bags, sandbags, and fiber rolls. Check dams should not be constructed from straw bales or silt fences, since concentrated flows quickly wash out these materials.

Rock check dams are usually constructed of 8 to 12 in. rock. The rock is placed either by hand or mechanically, but never just dumped into the channel. The dam should completely span the ditch or swale to prevent washout. The rock used should be large enough to stay in place given the expected design flow through the channel. It is recommended that abutments be extended 18 in. into the channel bank. Rock can be graded such that smaller diameter rock (e.g. 2-4 in) is located on the upstream side of larger rock (holding the smaller rock in place); increasing residence time.

Log check dams are usually constructed of 4 to 6 in. diameter logs, installed vertically. The logs should be embedded into the soil at least 18 in. Logs can be bolted or wired to vertical support logs that have been driven or buried into the soil.

See fiber rolls, SE-5, for installation of fiber roll check dams.

Gravel bag and sand bag check dams are constructed by stacking bags across the ditch or swale, shaped as shown in the drawings at the end of this fact sheet (see "Gravel Bag Check Dam" detail at the end of this fact sheet).

Manufactured products, such as temporary silt dikes (SE-12), should be installed in accordance with the manufacturer's instructions. Installation typically requires anchoring or trenching of products, as well as regular maintenance to remove accumulated sediment and debris.

If grass is planted to stabilize the ditch or swale, the check dam should be removed when the grass has matured (unless the slope of the swales is greater than 4%).

The following guidance should be followed for the design and layout of check dams:

- Install the first check dam approximately 16 ft from the outfall device and at regular intervals based on slope gradient and soil type.
- Check dams should be placed at a distance and height to allow small pools to form between each check dam.
- For multiple check dam installation, backwater from a downstream check dam should reach the toes of the upstream check dam.
- A sediment trap provided immediately upstream of the check dam will help capture sediment. Due to the potential for this sediment to be resuspended in subsequent storms, the sediment trap should be cleaned following each storm event.

- High flows (typically a 2-year storm or larger) should safely flow over the check dam without an increase in upstream flooding or damage to the check dam.
- Where grass is used to line ditches, check dams should be removed when grass has matured sufficiently to protect the ditch or swale.

Materials

- Rock used for check dams should typically be 8-12 in rock and be sufficiently sized to stay in place given expected design flows in the channel. Smaller diameter rock (e.g. 2 to 4 in) can be placed on the upstream side of larger rock to increase residence time.
- Gravel bags used for check dams should conform to the requirements of SE-6, Gravel Bag Berms.
- Sandbags used for check dams should conform to SE-8, Sandbag Barrier.
- Fiber rolls used for check dams should conform to SE-5, Fiber Rolls.
- Temporary silt dikes used for check dams should conform to SE-12, Temporary Silt Dikes.

Installation

- Rock should be placed individually by hand or by mechanical methods (no dumping of rock) to achieve complete ditch or swale coverage.
- Tightly abut bags and stack according to detail shown in the figure at the end of this section (pyramid approach). Gravel bags and sandbags should not be stacked any higher than 3 ft.
- Upper rows or gravel and sand bags shall overlap joints in lower rows.
- Fiber rolls should be trenched in, backfilled, and firmly staked in place.
- Install along a level contour.
- HDPE check dams, temporary silt dikes, and other manufactured products should be used and installed per manufacturer specifications.

Costs

Cost consists of labor costs if materials are readily available (such as gravel on-site). If material must be imported, costs will increase. For other material and installation costs, see SE-5, SE-6, SE-8, SE-12, and SE-14.

Inspection and Maintenance

- BMPs must be inspected in accordance with General Permit requirements for the associated project type and risk level. It is recommended that at a minimum, BMPs be inspected weekly, prior to forecasted rain events, daily during extended rain events, and after the conclusion of rain events.
- Replace missing rock, bags, rolls, etc. Replace bags or rolls that have degraded or have become damaged.

- If the check dam is used as a sediment capture device, sediment that accumulates behind the BMP should be periodically removed in order to maintain BMP effectiveness. Sediment should be removed when the sediment accumulation reaches one-third of the barrier height.
- If the check dam is used as a grade control structure, sediment removal is not required as long as the system continues to control the grade.
- Inspect areas behind check dams for pools of standing water, especially if subjected to daily non-stormwater discharges.
- Remove accumulated sediment prior to permanent seeding or soil stabilization.
- Remove check dam and accumulated sediment when check dams are no longer needed.

References

Draft – Sedimentation and Erosion Control, and Inventory of Current Practices, USEPA, April 1990.

Manual of Standards of Erosion and Sediment Control Measures, Association of Bay Area Governments, May 1995.

Stormwater Quality Handbooks - Construction Site Best Management Practices (BMPs) Manual, State of California Department of Transportation (Caltrans), March 2003.

Stormwater Management of the Puget Sound Basin, Technical Manual, Publication #91-75, Washington State Department of Ecology, February 1992.

Erosion and Sediment Control Manual, Oregon Department of Environmental Quality, February 2005.

Metzger, M.E. 2004. Managing mosquitoes in stormwater treatment devices. University of California Division of Agriculture and Natural Resources, Publication 8125. On-line: http://anrcatalog.ucdavis.edu/pdf/8125.pdf

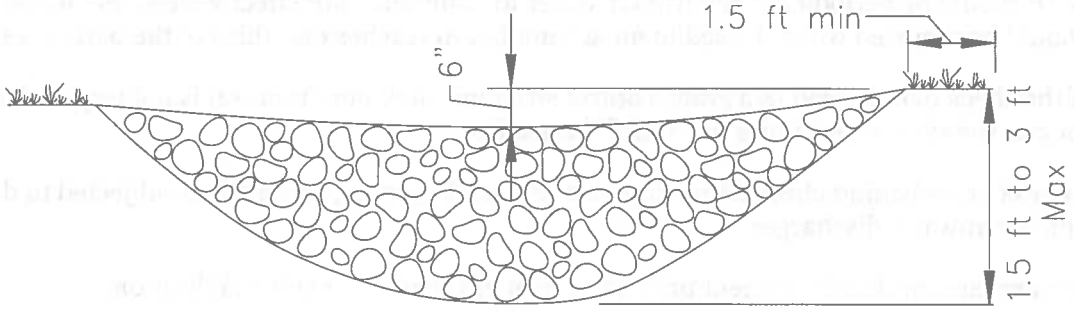

ELEVATION

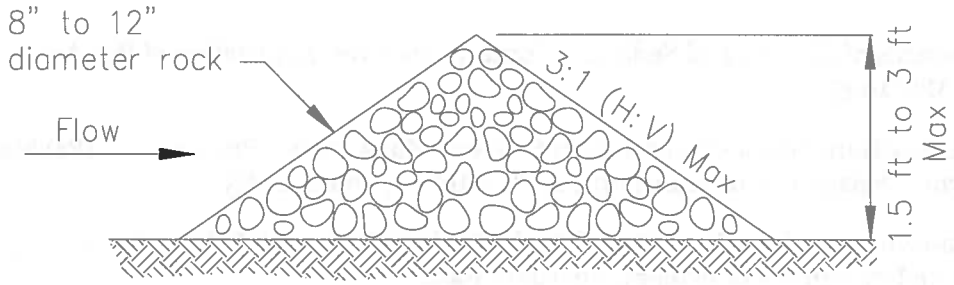

TYPICAL ROCK CHECK DAM SECTION

ROCK CHECK DAM
NOT TO SCALE

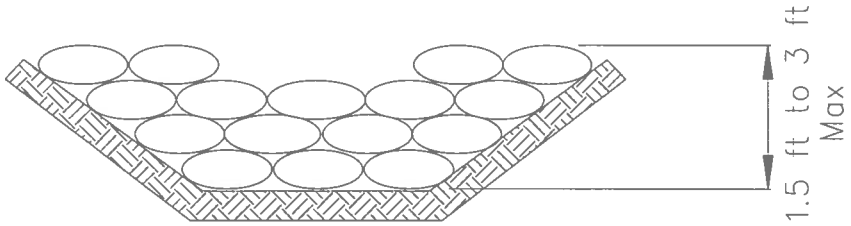

GRAVEL BAG CHECK DAM ELEVATION
NOT TO SCALE

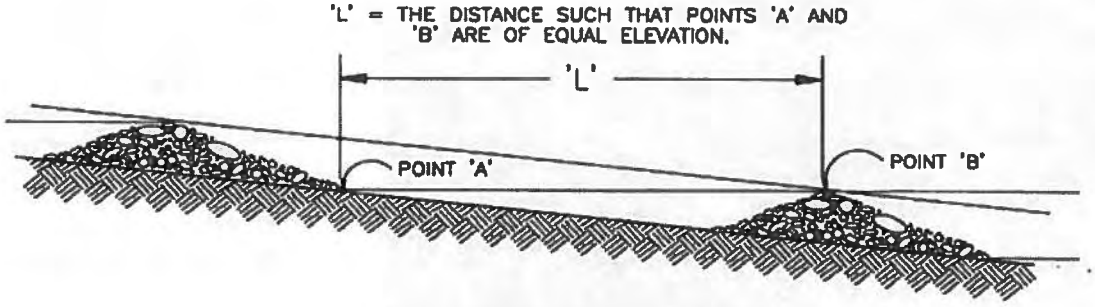

SPACING BETWEEN CHECK DAMS

Fiber Rolls SE-5

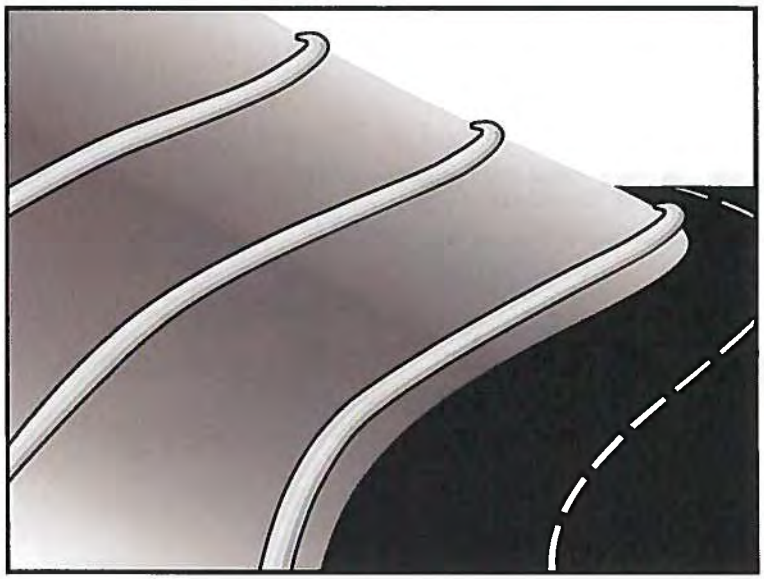

Categories

EC	Erosion Control	☒
SE	Sediment Control	☑
TC	Tracking Control	
WE	Wind Erosion Control	
NS	Non-Stormwater Management Control	
WM	Waste Management and Materials Pollution Control	

Legend:

☑ **Primary Category**

☒ **Secondary Category**

Targeted Constituents

Sediment	☑
Nutrients	
Trash	
Metals	
Bacteria	
Oil and Grease	
Organics	

Potential Alternatives

SE-1 Silt Fence

SE-6 Gravel Bag Berm

SE-8 Sandbag Barrier

SE-14 Biofilter Bags

Description and Purpose

A fiber roll consists of straw, coir, or other biodegradable materials bound into a tight tubular roll wrapped by netting, which can be photodegradable or natural. Additionally, gravel core fiber rolls are available, which contain an imbedded ballast material such as gravel or sand for additional weight when staking the rolls are not feasible (such as use as inlet protection). When fiber rolls are placed at the toe and on the face of slopes along the contours, they intercept runoff, reduce its flow velocity, release the runoff as sheet flow, and provide removal of sediment from the runoff (through sedimentation). By interrupting the length of a slope, fiber rolls can also reduce sheet and rill erosion until vegetation is established.

Suitable Applications

Fiber rolls may be suitable:

- Along the toe, top, face, and at grade breaks of exposed and erodible slopes to shorten slope length and spread runoff as sheet flow.
- At the end of a downward slope where it transitions to a steeper slope.
- Along the perimeter of a project.
- As check dams in unlined ditches with minimal grade.
- Down-slope of exposed soil areas.
- At operational storm drains as a form of inlet protection.

CASQA
CALIFORNIA STORMWATER QUALITY ASSOCIATION

- Around temporary stockpiles.

Limitations

- Fiber rolls are not effective unless trenched in and staked.
- Not intended for use in high flow situations.
- Difficult to move once saturated.
- If not properly staked and trenched in, fiber rolls could be transported by high flows.
- Fiber rolls have a very limited sediment capture zone.
- Fiber rolls should not be used on slopes subject to creep, slumping, or landslide.
- Rolls typically function for 12-24 months depending upon local conditions.

Implementation

Fiber Roll Materials

- Fiber rolls should be prefabricated.
- Fiber rolls may come manufactured containing polyacrylamide (PAM), a flocculating agent within the roll. Fiber rolls impregnated with PAM provide additional sediment removal capabilities and should be used in areas with fine, clayey or silty soils to provide additional sediment removal capabilities. Monitoring may be required for these installations.
- Fiber rolls are made from weed free rice straw, flax, or a similar agricultural material bound into a tight tubular roll by netting.
- Typical fiber rolls vary in diameter from 9 in. to 20 in. Larger diameter rolls are available as well.

Installation

- Locate fiber rolls on level contours spaced as follows:
  - Slope inclination of 4:1 (H:V) or flatter: Fiber rolls should be placed at a maximum interval of 20 ft.
  - Slope inclination between 4:1 and 2:1 (H:V): Fiber Rolls should be placed at a maximum interval of 15 ft. (a closer spacing is more effective).
  - Slope inclination 2:1 (H:V) or greater: Fiber Rolls should be placed at a maximum interval of 10 ft. (a closer spacing is more effective).
- Prepare the slope before beginning installation.
- Dig small trenches across the slope on the contour. The trench depth should be ¼ to 1/3 of the thickness of the roll, and the width should equal the roll diameter, in order to provide area to backfill the trench.

- It is critical that rolls are installed perpendicular to water movement, and parallel to the slope contour.
- Start building trenches and installing rolls from the bottom of the slope and work up.
- It is recommended that pilot holes be driven through the fiber roll. Use a straight bar to drive holes through the roll and into the soil for the wooden stakes.
- Turn the ends of the fiber roll up slope to prevent runoff from going around the roll.
- Stake fiber rolls into the trench.
  - Drive stakes at the end of each fiber roll and spaced 4 ft maximum on center.
  - Use wood stakes with a nominal classification of 0.75 by 0.75 in. and minimum length of 24 in.
- If more than one fiber roll is placed in a row, the rolls should be overlapped, not abutted.
- See typical fiber roll installation details at the end of this fact sheet.

Removal

- Fiber rolls can be left in place or removed depending on the type of fiber roll and application (temporary vs. permanent installation). Typically, fiber rolls encased with plastic netting are used for a temporary application because the netting does not biodegrade. Fiber rolls used in a permanent application are typically encased with a biodegradeable material and are left in place. Removal of a fiber roll used in a permanent application can result in greater disturbance.
- Temporary installations should only be removed when up gradient areas are stabilized per General Permit requirements, and/or pollutant sources no longer present a hazard. But, they should also be removed before vegetation becomes too mature so that the removal process does not disturb more soil and vegetation than is necessary.

Costs

Material costs for regular fiber rolls range from $20 - $30 per 25 ft roll.

Material costs for PAM impregnated fiber rolls range between 7.00-$9.00 per linear foot, based upon vendor research.

Inspection and Maintenance

- BMPs must be inspected in accordance with General Permit requirements for the associated project type and risk level. It is recommended that at a minimum, BMPs be inspected weekly, prior to forecasted rain events, daily during extended rain events, and after the conclusion of rain events.
- Repair or replace split, torn, unraveling, or slumping fiber rolls.
- If the fiber roll is used as a sediment capture device, or as an erosion control device to maintain sheet flows, sediment that accumulates in the BMP should be periodically removed

in order to maintain BMP effectiveness. Sediment should be removed when sediment accumulation reaches one-third the designated sediment storage depth.

- If fiber rolls are used for erosion control, such as in a check dam, sediment removal should not be required as long as the system continues to control the grade. Sediment control BMPs will likely be required in conjunction with this type of application.
- Repair any rills or gullies promptly.

References

Stormwater Quality Handbooks - Construction Site Best Management Practices (BMPs) Manual, State of California Department of Transportation (Caltrans), March 2003.

Erosion and Sediment Control Manual, Oregon Department of Environmental Quality, February 2005.

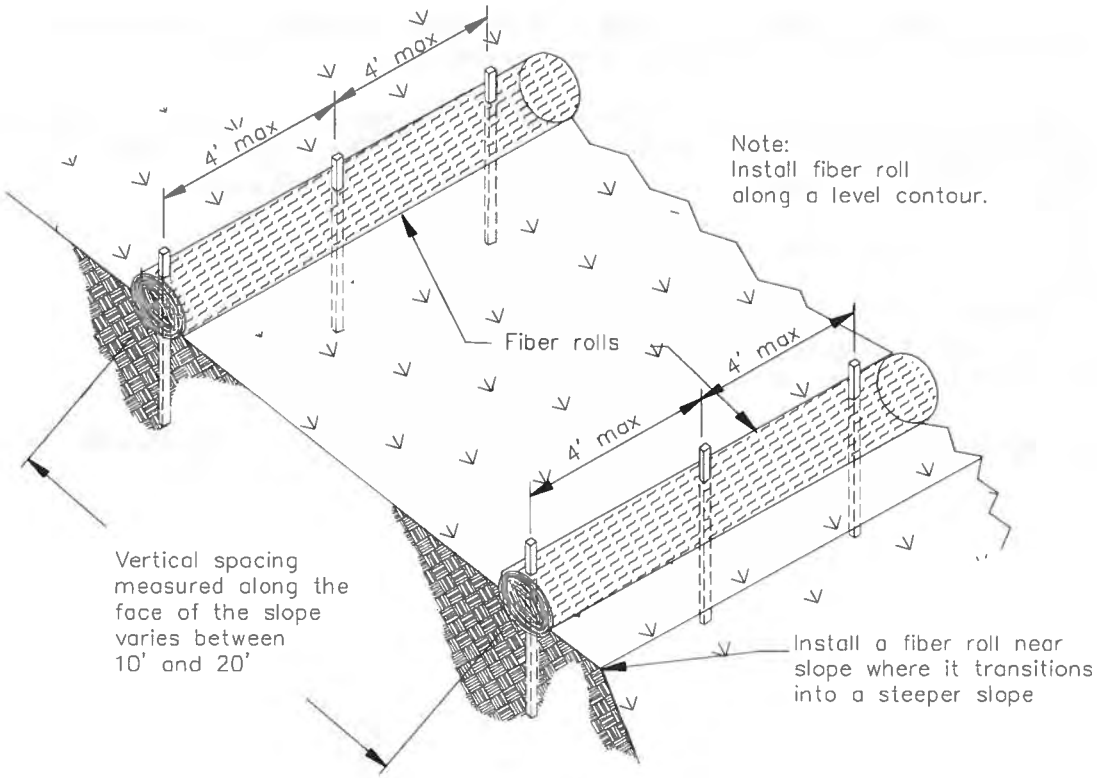

TYPICAL FIBER ROLL INSTALLATION

N.T.S.

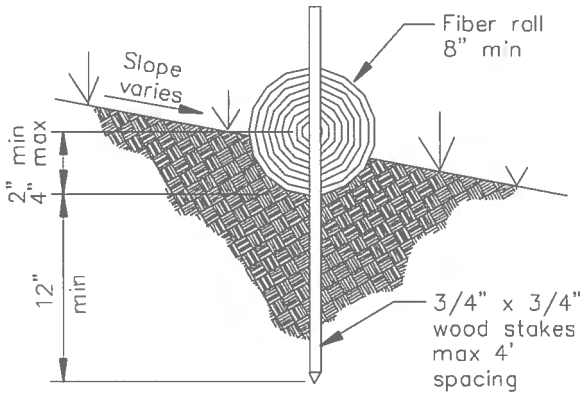

ENTRENCHMENT DETAIL

N.T.S.

Gravel Bag Berm SE-6

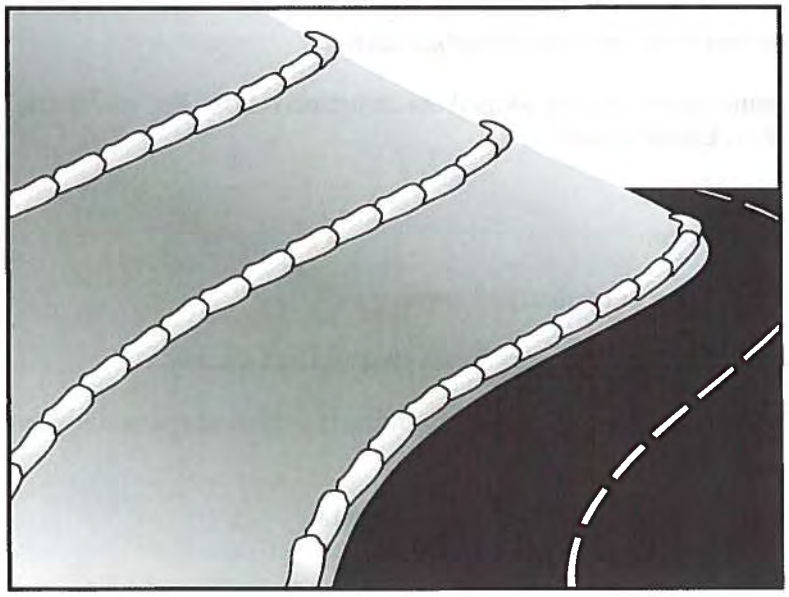

Description and Purpose

A gravel bag berm is a series of gravel-filled bags placed on a level contour to intercept sheet flows. Gravel bags pond sheet flow runoff, allowing sediment to settle out, and release runoff slowly as sheet flow, preventing erosion.

Suitable Applications

Gravel bag berms may be suitable:

- As a linear sediment control measure:
  - Below the toe of slopes and erodible slopes
  - As sediment traps at culvert/pipe outlets
  - Below other small cleared areas
  - Along the perimeter of a site
  - Down slope of exposed soil areas
  - Around temporary stockpiles and spoil areas
  - Parallel to a roadway to keep sediment off paved areas
  - Along streams and channels
- As a linear erosion control measure:
  - Along the face and at grade breaks of exposed and erodible slopes to shorten slope length and spread runoff as sheet flow.

Categories

EC	Erosion Control	☒
SE	Sediment Control	☑
TC	Tracking Control	
WE	Wind Erosion Control	
NS	Non-Stormwater Management Control	
WM	Waste Management and Materials Pollution Control	

Legend:

☑ **Primary Category**

☒ **Secondary Category**

Targeted Constituents

Sediment	☑
Nutrients	
Trash	
Metals	
Bacteria	
Oil and Grease	
Organics	

Potential Alternatives

SE-1 Silt Fence

SE-5 Fiber Roll

SE-8 Sandbag Barrier

SE-14 Biofilter Bags

CASQA
CALIFORNIA STORMWATER QUALITY ASSOCIATION

- At the top of slopes to divert runoff away from disturbed slopes.
- As chevrons (small check dams) across mildly sloped construction roads. For use check dam use in channels, see SE-4, Check Dams.

Limitations

- Gravel berms may be difficult to remove.
- Removal problems limit their usefulness in landscaped areas.
- Gravel bag berm may not be appropriate for drainage areas greater than 5 acres.
- Runoff will pond upstream of the berm, possibly causing flooding if sufficient space does not exist.
- Degraded gravel bags may rupture when removed, spilling contents.
- Installation can be labor intensive.
- Durability of gravel bags is somewhat limited and bags may need to be replaced when installation is required for longer than 6 months.
- Easily damaged by construction equipment.
- When used to detain concentrated flows, maintenance requirements increase.

Implementation

General

A gravel bag berm consists of a row of open graded gravel-filled bags placed on a level contour. When appropriately placed, a gravel bag berm intercepts and slows sheet flow runoff, causing temporary ponding. The temporary ponding allows sediment to settle. The open graded gravel in the bags is porous, which allows the ponded runoff to flow slowly through the bags, releasing the runoff as sheet flows. Gravel bag berms also interrupt the slope length and thereby reduce erosion by reducing the tendency of sheet flows to concentrate into rivulets, which erode rills, and ultimately gullies, into disturbed, sloped soils. Gravel bag berms are similar to sand bag barriers, but are more porous. Generally, gravel bag berms should be used in conjunction with temporary soil stabilization controls up slope to provide effective erosion and sediment control.

Design and Layout

- Locate gravel bag berms on level contours.
- When used for slope interruption, the following slope/sheet flow length combinations apply:
  - Slope inclination of 4:1 (H:V) or flatter: Gravel bags should be placed at a maximum interval of 20 ft, with the first row near the slope toe.
  - Slope inclination between 4:1 and 2:1 (H:V): Gravel bags should be placed at a maximum interval of 15 ft. (a closer spacing is more effective), with the first row near the slope toe.

Slope inclination 2:1 (H:V) or greater: Gravel bags should be placed at a maximum interval of 10 ft. (a closer spacing is more effective), with the first row near the slope toe.

- Turn the ends of the gravel bag barriers up slope to prevent runoff from going around the berm.
- Allow sufficient space up slope from the gravel bag berm to allow ponding, and to provide room for sediment storage.
- For installation near the toe of the slope, gravel bag barriers should be set back from the slope toe to facilitate cleaning. Where specific site conditions do not allow for a set-back, the gravel bag barrier may be constructed on the toe of the slope. To prevent flows behind the barrier, bags can be placed perpendicular to a berm to serve as cross barriers.
- Drainage area should not exceed 5 acres.
- In Non-Traffic Areas:
  - Height = 18 in. maximum
  - Top width = 24 in. minimum for three or more layer construction
  - Top width = 12 in. minimum for one or two layer construction
  - Side slopes = 2:1 (H:V) or flatter
- In Construction Traffic Areas:
  - Height = 12 in. maximum
  - Top width = 24 in. minimum for three or more layer construction.
  - Top width = 12 in. minimum for one or two layer construction.
  - Side slopes = 2:1 (H:V) or flatter.
- Butt ends of bags tightly.
- On multiple row, or multiple layer construction, overlap butt joints of adjacent row and row beneath.
- Use a pyramid approach when stacking bags.

Materials

- ***Bag Material:*** Bags should be woven polypropylene, polyethylene or polyamide fabric or burlap, minimum unit weight of 4 ounces/yd^2, Mullen burst strength exceeding 300 lb/in^2 in conformance with the requirements in ASTM designation D3786, and ultraviolet stability exceeding 70% in conformance with the requirements in ASTM designation D4355.

- ***Bag Size:*** Each gravel-filled bag should have a length of 18 in., width of 12 in., thickness of 3 in., and mass of approximately 33 lbs. Bag dimensions are nominal, and may vary based on locally available materials.
- ***Fill Material:*** Fill material should be 0.5 to 1 in. crushed rock, clean and free from clay, organic matter, and other deleterious material, or other suitable open graded, non-cohesive, porous gravel.

Costs

Material costs for gravel bags are average and are dependent upon material availability. $2.50-3.00 per filled gravel bag is standard based upon vendor research.

Inspection and Maintenance

- BMPs must be inspected in accordance with General Permit requirements for the associated project type and risk level. It is recommended that at a minimum, BMPs be inspected weekly, prior to forecasted rain events, daily during extended rain events, and after the conclusion of rain events.
- Gravel bags exposed to sunlight will need to be replaced every two to three months due to degrading of the bags.
- Reshape or replace gravel bags as needed.
- Repair washouts or other damage as needed.
- Sediment that accumulates in the BMP should be periodically removed in order to maintain BMP effectiveness. Sediment should be removed when the sediment accumulation reaches one-third of the barrier height.
- Remove gravel bag berms when no longer needed and recycle gravel fill whenever possible and properly dispose of bag material. Remove sediment accumulation and clean, re-grade, and stabilize the area.

References

Handbook of Steel Drainage and Highway Construction, American Iron and Steel Institute, 1983.

Stormwater Quality Handbooks - Construction Site Best Management Practices (BMPs) Manual, State of California Department of Transportation (Caltrans), March 2003.

Stormwater Pollution Plan Handbook, First Edition, State of California, Department of Transportation Division of New Technology, Materials and Research, October 1992.

Erosion and Sediment Control Manual, Oregon Department of Environmental Quality, February 2005.

Street Sweeping and Vacuuming SE-7

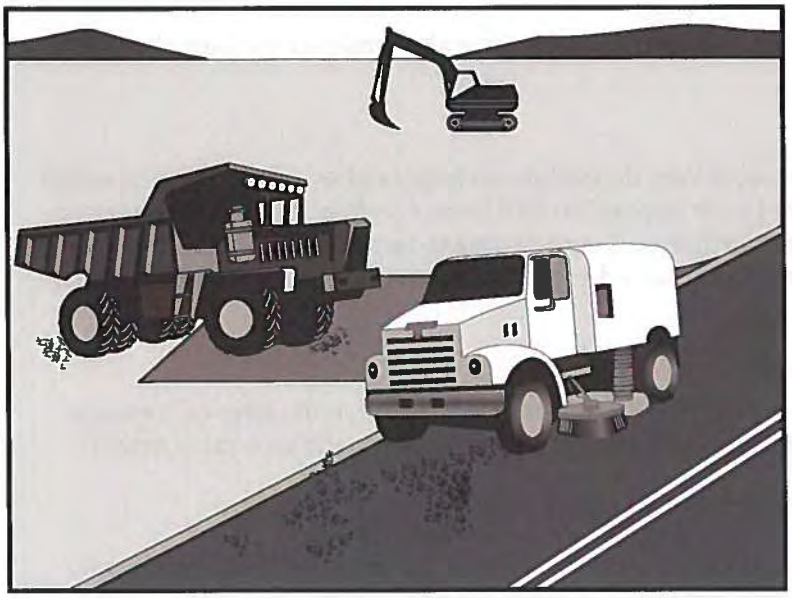

Categories

EC	Erosion Control	
SE	Sediment Control	☒
TC	Tracking Control	☑
WE	Wind Erosion Control	
NS	Non-Stormwater Management Control	
WM	Waste Management and Materials Pollution Control	

Legend:

☑ **Primary Objective**

☒ **Secondary Objective**

Targeted Constituents

Sediment	☑
Nutrients	
Trash	☑
Metals	
Bacteria	
Oil and Grease	☑
Organics	

Potential Alternatives

None

Description and Purpose

Street sweeping and vacuuming includes use of self-propelled and walk-behind equipment to remove sediment from streets and roadways, and to clean paved surfaces in preparation for final paving. Sweeping and vacuuming prevents sediment from the project site from entering storm drains or receiving waters.

Suitable Applications

Sweeping and vacuuming are suitable anywhere sediment is tracked from the project site onto public or private paved streets and roads, typically at points of egress. Sweeping and vacuuming are also applicable during preparation of paved surfaces for final paving.

Limitations

Sweeping and vacuuming may not be effective when sediment is wet or when tracked soil is caked (caked soil may need to be scraped loose).

Implementation

- Controlling the number of points where vehicles can leave the site will allow sweeping and vacuuming efforts to be focused, and perhaps save money.
- Inspect potential sediment tracking locations daily.
- Visible sediment tracking should be swept or vacuumed on a daily basis.
- Do not use kick brooms or sweeper attachments. These tend to spread the dirt rather than remove it.

CASQA
CALIFORNIA STORMWATER QUALITY ASSOCIATION

- If not mixed with debris or trash, consider incorporating the removed sediment back into the project

Costs

Rental rates for self-propelled sweepers vary depending on hopper size and duration of rental. Expect rental rates from $58/hour (3 yd^3 hopper) to $88/hour (9 yd^3 hopper), plus operator costs. Hourly production rates vary with the amount of area to be swept and amount of sediment. Match the hopper size to the area and expect sediment load to minimize time spent dumping.

Inspection and Maintenance

- Inspect BMPs prior to forecast rain, daily during extended rain events, after rain events, weekly during the rainy season, and at two-week intervals during the non-rainy season.
- When actively in use, points of ingress and egress must be inspected daily.
- When tracked or spilled sediment is observed outside the construction limits, it must be removed at least daily. More frequent removal, even continuous removal, may be required in some jurisdictions.
- Be careful not to sweep up any unknown substance or any object that may be potentially hazardous.
- Adjust brooms frequently; maximize efficiency of sweeping operations.
- After sweeping is finished, properly dispose of sweeper wastes at an approved dumpsite.

References

Stormwater Quality Handbooks - Construction Site Best Management Practices (BMPs) Manual, State of California Department of Transportation (Caltrans), November 2000.

Labor Surcharge and Equipment Rental Rates, State of California Department of Transportation (Caltrans), April 1, 2002 – March 31, 2003.

Sandbag Barrier SE-8

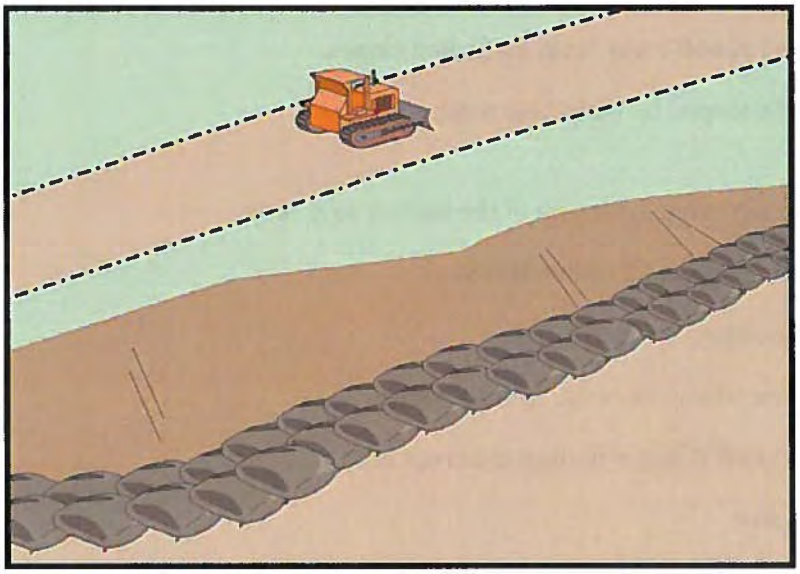

Categories

EC	Erosion Control	☒
SE	Sediment Control	☑
TC	Tracking Control	
WE	Wind Erosion Control	
NS	Non-Stormwater Management Control	
WM	Waste Management and Materials Pollution Control	

Legend:

☑ **Primary Category**

☒ **Secondary Category**

Targeted Constituents

Sediment	☑
Nutrients	
Trash	
Metals	
Bacteria	
Oil and Grease	
Organics	

Potential Alternatives

SE-1 Silt Fence

SE-5 Fiber Rolls

SE-6 Gravel Bag Berm

SE-14 Biofilter Bags

Description and Purpose

A sandbag barrier is a series of sand-filled bags placed on a level contour to intercept or to divert sheet flows. Sandbag barriers placed on a level contour pond sheet flow runoff, allowing sediment to settle out.

Suitable Applications

Sandbag barriers may be suitable:

- As a linear sediment control measure:
  - Below the toe of slopes and erodible slopes.
  - As sediment traps at culvert/pipe outlets.
  - Below other small cleared areas.
  - Along the perimeter of a site.
  - Down slope of exposed soil areas.
  - Around temporary stockpiles and spoil areas.
  - Parallel to a roadway to keep sediment off paved areas.
  - Along streams and channels.
- As linear erosion control measure:
  - Along the face and at grade breaks of exposed and erodible slopes to shorten slope length and spread runoff as sheet flow.

CASQA
CALIFORNIA STORMWATER QUALITY ASSOCIATION

- At the top of slopes to divert runoff away from disturbed slopes.
- As check dams across mildly sloped construction roads.

Limitations

- It is necessary to limit the drainage area upstream of the barrier to 5 acres.
- Sandbags are not intended to be used as filtration devices.
- Easily damaged by construction equipment.
- Degraded sandbags may rupture when removed, spilling sand.
- Sand is easily transported by runoff if bag is damaged or ruptured.
- Installation can be labor intensive.
- Durability of sandbags is somewhat limited and bags may need to be replaced when installation is required for longer than 6 months. When used to detain concentrated flows, maintenance requirements increase.
- Burlap should not be used for sandbags.

Implementation

General

A sandbag barrier consists of a row of sand-filled bags placed on a level contour. When appropriately placed, a sandbag barrier intercepts and slows sheet flow runoff, causing temporary ponding. The temporary ponding allows sediment to settle. Sand-filled bags have limited porosity, which is further limited as the fine sand tends to quickly plug with sediment, limiting or completely blocking the rate of flow through the barrier. If a porous barrier is desired, consider SE-1, Silt Fence, SE-5, Fiber Rolls, SE-6, Gravel Bag Berms or SE-14, Biofilter Bags. Sandbag barriers also interrupt the slope length and thereby reduce erosion by reducing the tendency of sheet flows to concentrate into rivulets which erode rills, and ultimately gullies, into disturbed, sloped soils. Sandbag barriers are similar to gravel bag berms, but less porous. Generally, sandbag barriers should be used in conjunction with temporary soil stabilization controls up slope to provide effective erosion and sediment control.

Design and Layout

- Locate sandbag barriers on a level contour.
- When used for slope interruption, the following slope/sheet flow length combinations apply:
  - Slope inclination of 4:1 (H:V) or flatter: Sandbags should be placed at a maximum interval of 20 ft, with the first row near the slope toe.
  - Slope inclination between 4:1 and 2:1 (H:V): Sandbags should be placed at a maximum interval of 15 ft. (a closer spacing is more effective), with the first row near the slope toe.

    Slope inclination 2:1 (H:V) or greater: Sandbags should be placed at a maximum interval of 10 ft. (a closer spacing is more effective), with the first row near the slope toe.

- Turn the ends of the sandbag barrier up slope to prevent runoff from going around the barrier.
- Allow sufficient space up slope from the barrier to allow ponding, and to provide room for sediment storage.
- For installation near the toe of the slope, sand bag barriers should be set back from the slope toe to facilitate cleaning. Where specific site conditions do not allow for a set-back, the sand bag barrier may be constructed on the toe of the slope. To prevent flows behind the barrier, bags can be placed perpendicular to a berm to serve as cross barriers.
- Drainage area should not exceed 5 acres.
- Stack sandbags at least three bags high.
- Butt ends of bags tightly.
- Overlap butt joints of row beneath with each successive row.
- Use a pyramid approach when stacking bags.
- In non-traffic areas
  - Height = 18 in. maximum
  - Top width = 24 in. minimum for three or more layer construction
  - Side slope = 2:1 (H:V) or flatter
- In construction traffic areas
  - Height = 12 in. maximum
  - Top width = 24 in. minimum for three or more layer construction.
  - Side slopes = 2:1 (H:V) or flatter.
- See typical sandbag barrier installation details at the end of this fact sheet.

Materials

- ***Sandbag Material:*** Sandbag should be woven polypropylene, polyethylene or polyamide fabric, minimum unit weight of 4 ounces/yd^2, Mullen burst strength exceeding 300 lb/in^2 in conformance with the requirements in ASTM designation D3786, and ultraviolet stability exceeding 70% in conformance with the requirements in ASTM designation D4355. Use of burlap is not an acceptable substitute, as sand can more easily mobilize out of burlap.
- ***Sandbag Size:*** Each sand-filled bag should have a length of 18 in., width of 12 in., thickness of 3 in., and mass of approximately 33 lbs. Bag dimensions are nominal, and may vary based on locally available materials.

- ***Fill Material:*** All sandbag fill material should be non-cohesive, Class 3 (Caltrans Standard Specification, Section 25) permeable material free from clay and deleterious material, such as recycled concrete or asphalt..

Costs

Empty sandbags cost $0.25 - $0.75. Average cost of fill material is $8 per yd^3. Additional labor is required to fill the bags. Pre-filled sandbags are more expensive at $1.50 - $2.00 per bag. These costs are based upon vendor research.

Inspection and Maintenance

- BMPs must be inspected in accordance with General Permit requirements for the associated project type and risk level. It is recommended that at a minimum, BMPs be inspected weekly, prior to forecasted rain events, daily during extended rain events, and after the conclusion of rain events.
- Sandbags exposed to sunlight will need to be replaced every two to three months due to degradation of the bags.
- Reshape or replace sandbags as needed.
- Repair washouts or other damage as needed.
- Sediment that accumulates behind the BMP should be periodically removed in order to maintain BMP effectiveness. Sediment should be removed when the sediment accumulation reaches one-third of the barrier height.
- Remove sandbags when no longer needed and recycle sand fill whenever possible and properly dispose of bag material. Remove sediment accumulation, and clean, re-grade, and stabilize the area.

References

Standard Specifications for Construction of Local Streets and Roads, California Department of Transportation (Caltrans), July 2002.

Stormwater Quality Handbooks - Construction Site Best Management Practices (BMPs) Manual, State of California Department of Transportation (Caltrans), March 2003.

Erosion and Sediment Control Manual, Oregon Department of Environmental Quality, February 2005.

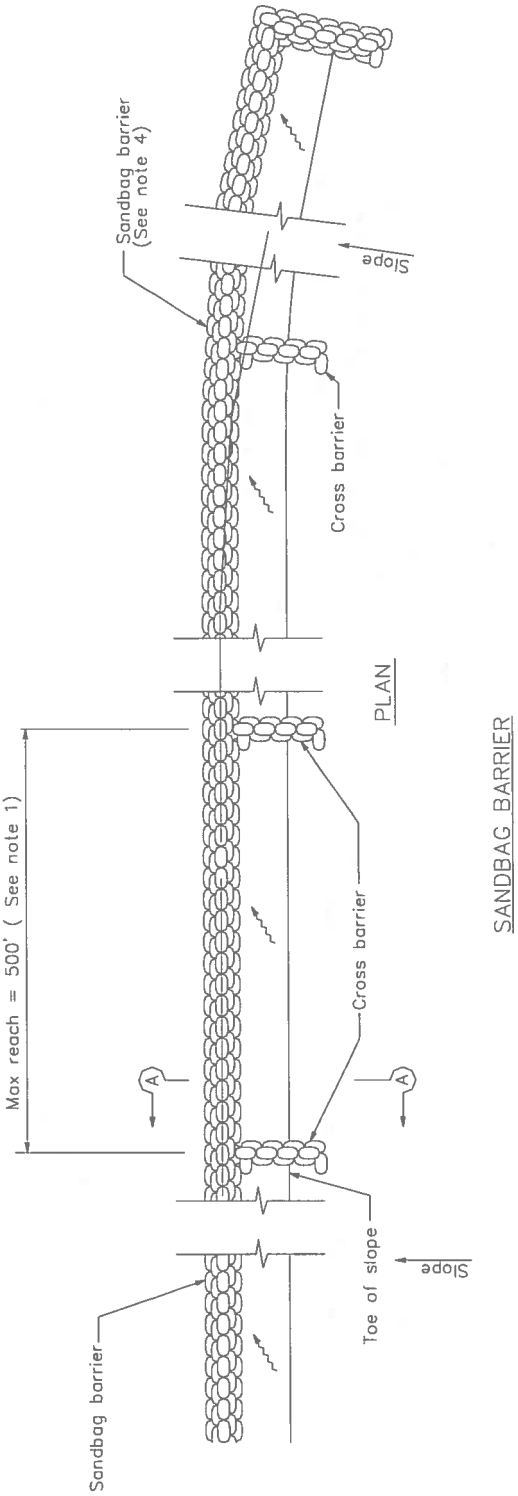

SANDBAG BARRIER

NOTES

1. Construct the length of each reach so that the change in base elevation along the reach does not exceed 1/2 the height of the linear barrier. In no case shall the reach length exceed 500'.
2. Place sandbags tightly.
3. Dimension may vary to fit field condition.
4. Sandbag barrier shall be a minimum of 3 bags high.
5. The end of the barrier shall be turned up slope.
6. Cross barriers shall be a min of 1/2 and a max of 2/3 the height of the linear barrier.
7. Sandbag rows and layers shall be staggered to eliminate gaps.

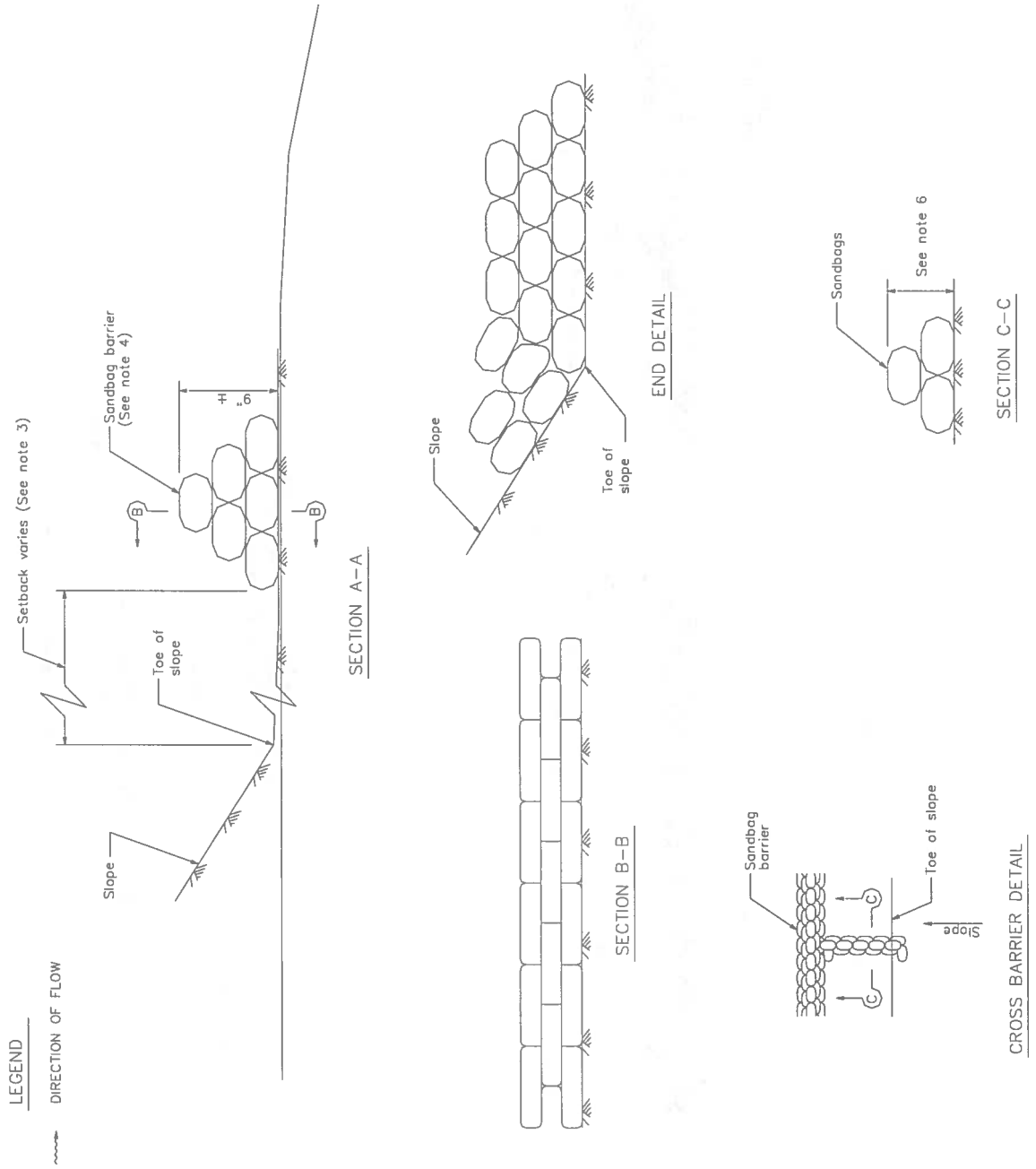
LEGEND
DIRECTION OF FLOW
Setback varies (See note 3)
Sandbag barrier (See note 4)
9"
B
B
Toe of slope
Slope
SECTION A–A
Slope
Toe of slope
END DETAIL
SECTION B–B
Sandbags
See note 6
SECTION C–C
Sandbag barrier
C
C
Toe of slope
Slope
CROSS BARRIER DETAIL

Straw Bale Barrier SE-9

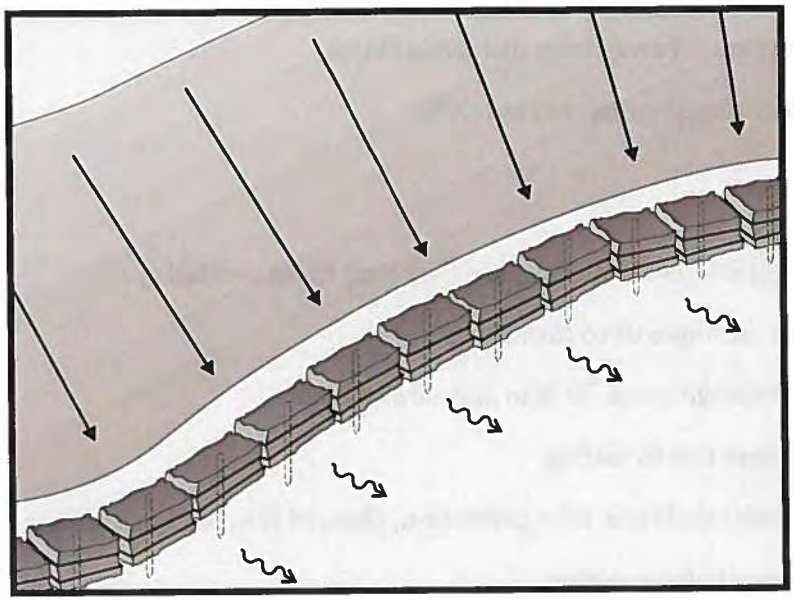

Description and Purpose

A straw bale barrier is a series of straw bales placed on a level contour to intercept sheet flows. Straw bale barriers pond sheet- flow runoff, allowing sediment to settle out.

Suitable Applications

Straw bale barriers may be suitable:

- As a linear sediment control measure:
  - Below the toe of slopes and erodible slopes
  - As sediment traps at culvert/pipe outlets
  - Below other small cleared areas
  - Along the perimeter of a site
  - Down slope of exposed soil areas
  - Around temporary stockpiles and spoil areas
  - Parallel to a roadway to keep sediment off paved areas
  - Along streams and channels
- As linear erosion control measure:
  - Along the face and at grade breaks of exposed and erodible slopes to shorten slope length and spread runoff as sheet flow

Categories

EC	Erosion Control	☒
SE	Sediment Control	☑
TC	Tracking Control	
WE	Wind Erosion Control	
NS	Non-Stormwater Management Control	
WM	Waste Management and Materials Pollution Control	

Legend:

☑ **Primary Objective**

☒ **Secondary Objective**

Targeted Constituents

Sediment	☑
Nutrients	
Trash	
Metals	
Bacteria	
Oil and Grease	
Organics	

Potential Alternatives

SE-1 Silt Fence

SE-5 Fiber Rolls

SE-6 Gravel Bag Berm

SE-8 Sandbag Barrier

CASQA
CALIFORNIA STORMWATER QUALITY ASSOCIATION

- At the top of slopes to divert runoff away from disturbed slopes
- As check dams across mildly sloped construction roads

Limitations

Straw bale barriers:

- Are not to be used for extended periods of time because they tend to rot and fall apart
- Are suitable only for sheet flow on slopes of 10 % or flatter
- Are not appropriate for large drainage areas, limit to one acre or less
- May require constant maintenance due to rotting
- Are not recommended for concentrated flow, inlet protection, channel flow, and live streams
- Cannot be made of bale bindings of jute or cotton
- Require labor-intensive installation and maintenance
- Cannot be used on paved surfaces
- Should not to be used for drain inlet protection
- Should not be used on lined ditches
- May introduce undesirable non-native plants to the area

Implementation

General

A straw bale barrier consists of a row of straw bales placed on a level contour. When appropriately placed, a straw bale barrier intercepts and slows sheet flow runoff, causing temporary ponding. The temporary ponding provides quiescent conditions allowing sediment to settle. Straw bale barriers also interrupt the slope length and thereby reduce erosion by reducing the tendency of sheet flows to concentrate into rivulets, which erode rills, and ultimately gullies, into disturbed, sloped soils.

Straw bale barriers have not been as effective as expected due to improper use. These barriers have been placed in streams and drainage ways where runoff volumes and velocities have caused the barriers to wash out. In addition, failure to stake and entrench the straw bale has allowed undercutting and end flow. Use of straw bale barriers in accordance with this BMP should produce acceptable results.

Design and Layout

- Locate straw bale barriers on a level contour.
  - Slopes up to 10:1 (H:V): Straw bales should be placed at a maximum interval of 50 ft (a closer spacing is more effective), with the first row near the toe of slope.
  - Slopes greater than 10:1 (H:V): Not recommended.

- Turn the ends of the straw bale barrier up slope to prevent runoff from going around the barrier.
- Allow sufficient space up slope from the barrier to allow ponding, and to provide room for sediment storage.
- For installation near the toe of the slope, consider moving the barrier away from the slope toe to facilitate cleaning. To prevent flow behind the barrier, sand bags can be placed perpendicular to the barrier to serve as cross barriers.
- Drainage area should not exceed 1 acre, or 0.25 acre per 100 ft of barrier.
- Maximum flow path to the barrier should be limited to 100 ft.
- Straw bale barriers should consist of two parallel rows.
  - Butt ends of bales tightly
  - Stagger butt joints between front and back row
  - Each row of bales must be trenched in and firmly staked
- Straw bale barriers are limited in height to one bale laid on its side.
- Anchor bales with either two wood stakes or four bars driven through the bale and into the soil. Drive the first stake towards the butt joint with the adjacent bale to force the bales together.
- See attached figure for installation details.

Materials

- ***Straw Bale Size:*** Each straw bale should be a minimum of 14 in. wide, 18 in. in height, 36 in. in length and should have a minimum mass of 50 lbs. The straw bale should be composed entirely of vegetative matter, except for the binding material.
- ***Bale Bindings:*** Bales should be bound by steel wire, nylon or polypropylene string placed horizontally. Jute and cotton binding should not be used. Baling wire should be a minimum diameter of 14 gauge. Nylon or polypropylene string should be approximately 12 gauge in diameter with a breaking strength of 80 lbs force.
- ***Stakes:*** Wood stakes should be commercial quality lumber of the size and shape shown on the plans. Each stake should be free from decay, splits or cracks longer than the thickness of the stake, or other defects that would weaken the stakes and cause the stakes to be structurally unsuitable. Steel bar reinforcement should be equal to a #4 designation or greater. End protection should be provided for any exposed bar reinforcement.

Costs

Straw bales cost $5 - $7 each. Adequate labor should be budgeted for installation and maintenance.

Inspection and Maintenance

Maintenance

- Inspect BMPs prior to forecast rain, daily during extended rain events, after rain events, weekly during the rainy season, and at two-week intervals during the non-rainy season.
- Straw bales degrade, especially when exposed to moisture. Rotting bales will need to be replaced on a regular basis.
- Replace or repair damaged bales as needed.
- Repair washouts or other damages as needed.
- Sediment that accumulates in the BMP must be periodically removed in order to maintain BMP effectiveness. Sediment should be removed when the sediment accumulation reaches one-third of the barrier height. Sediment removed during maintenance may be incorporated into earthwork on the site or disposed at an appropriate location.
- Remove straw bales when no longer needed. Remove sediment accumulation, and clean, re-grade, and stabilize the area. Removed sediment should be incorporated in the project or disposed of.

References

Stormwater Quality Handbooks - Construction Site Best Management Practices (BMPs) Manual, State of California Department of Transportation (Caltrans), November 2000.

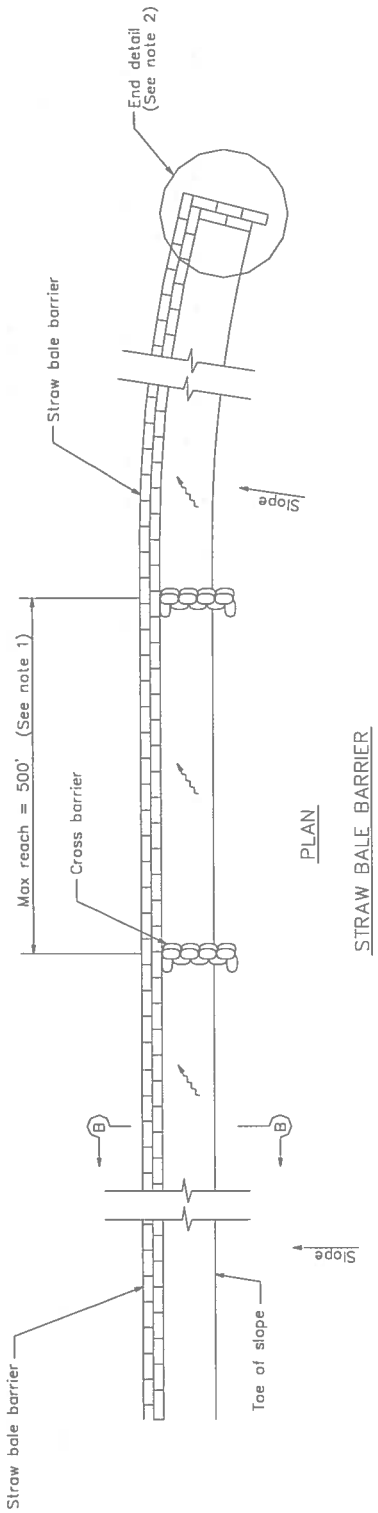

PLAN

STRAW BALE BARRIER

LEGEND

DIRECTION OF FLOW

NOTES

1. Construct the length of each reach so that the change in base elevation along the reach does not exceed 1/2 the height of the linear barrier. In no case shall the reach length exceed 500'.
2. The end of barrier shall be turned up slope.
3. Dimension may vary to fit field condition.
4. Stake dimensions are nominal.
5. Place straw bales tightly together.
6. Tamp embedment spoils against sides of installed bales.
7. Drive angled wood stake before vertical stake to ensure tight abutment to adjacent bale.
8. Sandbag cross barriers should be a min of 1/2 and a max of 2/3 the height of the linear barrier.
9. Sandbag rows and layers should be offset to eliminate gaps.

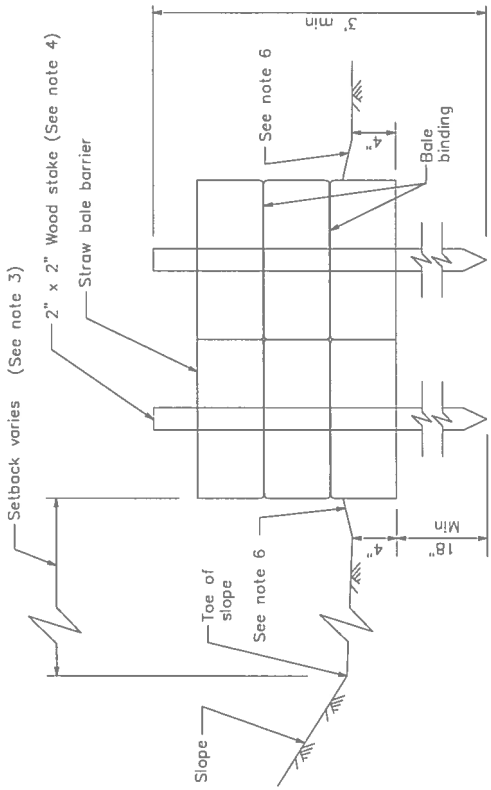

SECTION B–B

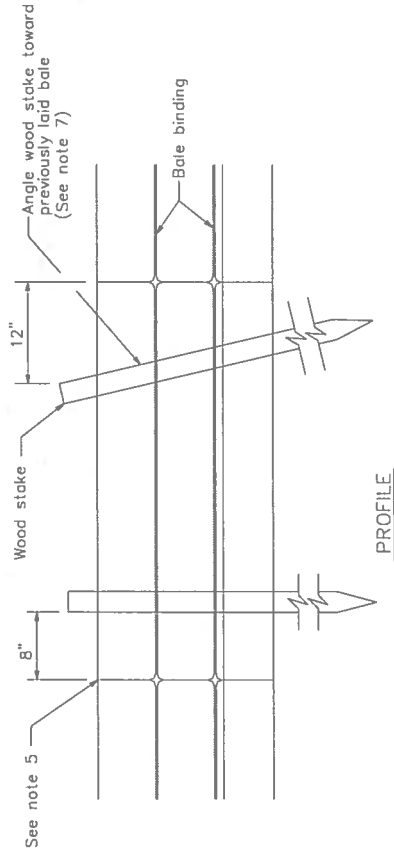

PROFILE

LEGEND

DIRECTION OF FLOW

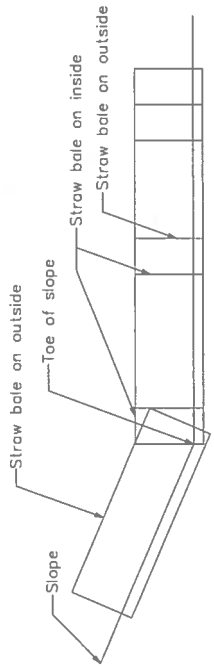

END DETAIL

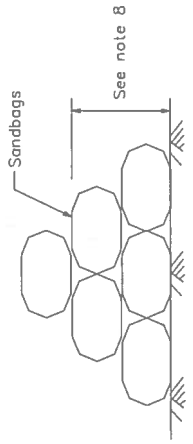

SANDBAG CROSS BARRIER

Storm Drain Inlet Protection SE-10

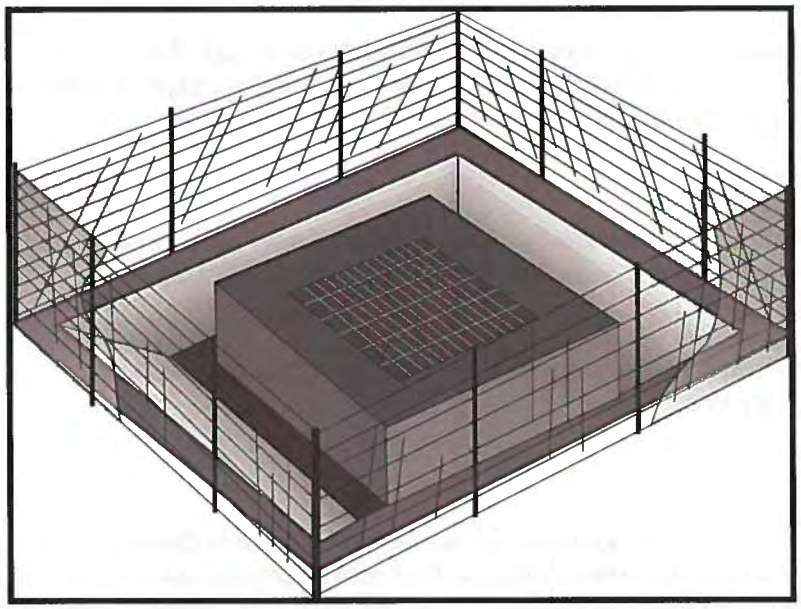

Categories

EC	Erosion Control	
SE	Sediment Control	☑
TC	Tracking Control	
WE	Wind Erosion Control	
NS	Non-Stormwater Management Control	
WM	Waste Management and Materials Pollution Control	

Legend:

☑ **Primary Category**

☒ **Secondary Category**

Targeted Constituents

Sediment	☑
Nutrients	
Trash	☒
Metals	
Bacteria	
Oil and Grease	
Organics	

Potential Alternatives

SE-1 Silt Fence

SE-5 Fiber Rolls

SE-6 Gravel Bag Berm

SE-8 Sandbag Barrier

SE-14 Biofilter Bags

Description and Purpose

Storm drain inlet protection consists of a sediment filter or an impounding area in, around or upstream of a storm drain, drop inlet, or curb inlet. Storm drain inlet protection measures temporarily pond runoff before it enters the storm drain, allowing sediment to settle. Some filter configurations also remove sediment by filtering, but usually the ponding action results in the greatest sediment reduction. Temporary geotextile storm drain inserts attach underneath storm drain grates to capture and filter storm water.

Suitable Applications

Every storm drain inlet receiving runoff from unstabilized or otherwise active work areas should be protected. Inlet protection should be used in conjunction with other erosion and sediment controls to prevent sediment-laden stormwater and non-stormwater discharges from entering the storm drain system.

Limitations

- Drainage area should not exceed 1 acre.
- In general straw bales should not be used as inlet protection.
- Requires an adequate area for water to pond without encroaching into portions of the roadway subject to traffic.

CASQA
CALIFORNIA STORMWATER QUALITY ASSOCIATION

- Sediment removal may be inadequate to prevent sediment discharges in high flow conditions or if runoff is heavily sediment laden. If high flow conditions are expected, use other onsite sediment trapping techniques in conjunction with inlet protection.
- Frequent maintenance is required.
- Limit drainage area to 1 acre maximum. For drainage areas larger than 1 acre, runoff should be routed to a sediment-trapping device designed for larger flows. See BMPs SE-2, Sediment Basin, and SE-3, Sediment Traps.
- Excavated drop inlet sediment traps are appropriate where relatively heavy flows are expected, and overflow capability is needed.

Implementation

General

Inlet control measures presented in this handbook should not be used for inlets draining more than one acre. Runoff from larger disturbed areas should be first routed through SE-2, Sediment Basin or SE-3, Sediment Trap and/or used in conjunction with other drainage control, erosion control, and sediment control BMPs to protect the site. Different types of inlet protection are appropriate for different applications depending on site conditions and the type of inlet. Alternative methods are available in addition to the methods described/shown herein such as prefabricated inlet insert devices, or gutter protection devices.

Design and Layout

Identify existing and planned storm drain inlets that have the potential to receive sediment-laden surface runoff. Determine if storm drain inlet protection is needed and which method to use.

- The key to successful and safe use of storm drain inlet protection devices is to know where runoff that is directed toward the inlet to be protected will pond or be diverted as a result of installing the protection device.
  - Determine the acceptable location and extent of ponding in the vicinity of the drain inlet. The acceptable location and extent of ponding will influence the type and design of the storm drain inlet protection device.
  - Determine the extent of potential runoff diversion caused by the storm drain inlet protection device. Runoff ponded by inlet protection devices may flow around the device and towards the next downstream inlet. In some cases, this is acceptable; in other cases, serious erosion or downstream property damage can be caused by these diversions. The possibility of runoff diversions will influence whether or not storm drain inlet protection is suitable; and, if suitable, the type and design of the device.
- The location and extent of ponding, and the extent of diversion, can usually be controlled through appropriate placement of the inlet protection device. In some cases, moving the inlet protection device a short distance upstream of the actual inlet can provide more efficient sediment control, limit ponding to desired areas, and prevent or control diversions.

- Six types of inlet protection are presented below. However, it is recognized that other effective methods and proprietary devices exist and may be selected.
  - Silt Fence: Appropriate for drainage basins with less than a 5% slope, sheet flows, and flows under 0.5 cfs.
  - Excavated Drop Inlet Sediment Trap: An excavated area around the inlet to trap sediment (SE-3).
  - Gravel bag barrier: Used to create a small sediment trap upstream of inlets on sloped, paved streets. Appropriate for sheet flow or when concentrated flow may exceed 0.5 cfs, and where overtopping is required to prevent flooding.
  - Block and Gravel Filter: Appropriate for flows greater than 0.5 cfs.
  - Temporary Geotextile Storm drain Inserts: Different products provide different features. Refer to manufacturer details for targeted pollutants and additional features.
  - Biofilter Bag Barrier: Used to create a small retention area upstream of inlets and can be located on pavement or soil. Biofilter bags slowly filter runoff allowing sediment to settle out. Appropriate for flows under 0.5 cfs.
- Select the appropriate type of inlet protection and design as referred to or as described in this fact sheet.
- Provide area around the inlet for water to pond without flooding structures and property.
- Grates and spaces around all inlets should be sealed to prevent seepage of sediment-laden water.
- Excavate sediment sumps (where needed) 1 to 2 ft with 2:1 side slopes around the inlet.

Installation

- ***DI Protection Type 1 - Silt Fence*** - Similar to constructing a silt fence; see BMP SE-1, Silt Fence. Do not place fabric underneath the inlet grate since the collected sediment may fall into the drain inlet when the fabric is removed or replaced and water flow through the grate will be blocked resulting in flooding. See typical Type 1 installation details at the end of this fact sheet.
  1. Excavate a trench approximately 6 in. wide and 6 in. deep along the line of the silt fence inlet protection device.
  2. Place 2 in. by 2 in. wooden stakes around the perimeter of the inlet a maximum of 3 ft apart and drive them at least 18 in. into the ground or 12 in. below the bottom of the trench. The stakes should be at least 48 in.
  3. Lay fabric along bottom of trench, up side of trench, and then up stakes. See SE-1, Silt Fence, for details. The maximum silt fence height around the inlet is 24 in.
  4. Staple the filter fabric (for materials and specifications, see SE-1, Silt Fence) to wooden stakes. Use heavy-duty wire staples at least 1 in. in length.

5. Backfill the trench with gravel or compacted earth all the way around.

- ***DI Protection Type 2 - Excavated Drop Inlet Sediment Trap*** - Install filter fabric fence in accordance with DI Protection Type 1. Size excavated trap to provide a minimum storage capacity calculated at the rate 67 yd^3/acre of drainage area. See typical Type 2 installation details at the end of this fact sheet.

- ***DI Protection Type 3 - Gravel bag*** - Flow from a severe storm should not overtop the curb. In areas of high clay and silts, use filter fabric and gravel as additional filter media. Construct gravel bags in accordance with SE-6, Gravel Bag Berm. Gravel bags should be used due to their high permeability. See typical Type 3 installation details at the end of this fact sheet.

  1. Construct on gently sloping street.

  2. Leave room upstream of barrier for water to pond and sediment to settle.

  3. Place several layers of gravel bags – overlapping the bags and packing them tightly together.

  4. Leave gap of one bag on the top row to serve as a spillway. Flow from a severe storm (e.g., 10 year storm) should not overtop the curb.

- ***DI Protection Type 4 – Block and Gravel Filter*** - Block and gravel filters are suitable for curb inlets commonly used in residential, commercial, and industrial construction. See typical Type 4 installation details at the end of this fact sheet.

  1. Place hardware cloth or comparable wire mesh with 0.5 in. openings over the drop inlet so that the wire extends a minimum of 1 ft beyond each side of the inlet structure. If more than one strip is necessary, overlap the strips. Place woven geotextile over the wire mesh.

  2. Place concrete blocks lengthwise on their sides in a single row around the perimeter of the inlet, so that the open ends face outward, not upward. The ends of adjacent blocks should abut. The height of the barrier can be varied, depending on design needs, by stacking combinations of blocks that are 4 in., 8 in., and 12 in. wide. The row of blocks should be at least 12 in. but no greater than 24 in. high.

  3. Place wire mesh over the outside vertical face (open end) of the concrete blocks to prevent stone from being washed through the blocks. Use hardware cloth or comparable wire mesh with 0.5 in. opening.

  4. Pile washed stone against the wire mesh to the top of the blocks. Use 0.75 to 3 in.

- ***DI Protection Type 5 – Temporary Geotextile Insert (proprietary)*** – Many types of temporary inserts are available. Most inserts fit underneath the grate of a drop inlet or inside of a curb inlet and are fastened to the outside of the grate or curb. These inserts are removable and many can be cleaned and reused. Installation of these inserts differs between manufacturers. Please refer to manufacturer instruction for installation of proprietary devices.

- ***DI Protection Type 6 - Biofilter bags*** – Biofilter bags may be used as a substitute for gravel bags in low-flow situations. Biofilter bags should conform to specifications detailed in SE-14, Biofilter bags.

  1. Construct in a gently sloping area.
  2. Biofilter bags should be placed around inlets to intercept runoff flows.
  3. All bag joints should overlap by 6 in.
  4. Leave room upstream for water to pond and for sediment to settle out.
  5. Stake bags to the ground as described in the following detail. Stakes may be omitted if bags are placed on a paved surface.

Costs

- Average annual cost for installation and maintenance of DI Type 1-4 and 6 (one year useful life) is $200 per inlet.
- Temporary geotextile inserts are proprietary and cost varies by region. These inserts can often be reused and may have greater than 1 year of use if maintained and kept undamaged. Average cost per insert ranges from $50-75 plus installation, but costs can exceed $100. This cost does not include maintenance.

Inspection and Maintenance

- BMPs must be inspected in accordance with General Permit requirements for the associated project type and risk level. It is recommended that at a minimum, BMPs be inspected weekly, prior to forecasted rain events, daily during extended rain events, and after the conclusion of rain events.
- Silt Fences. If the fabric becomes clogged, torn, or degrades, it should be replaced. Make sure the stakes are securely driven in the ground and are in good shape (i.e., not bent, cracked, or splintered, and are reasonably perpendicular to the ground). Replace damaged stakes. At a minimum, remove the sediment behind the fabric fence when accumulation reaches one-third the height of the fence or barrier height.
- Gravel Filters. If the gravel becomes clogged with sediment, it should be carefully removed from the inlet and either cleaned or replaced. Since cleaning gravel at a construction site may be difficult, consider using the sediment-laden stone as fill material and put fresh stone around the inlet. Inspect bags for holes, gashes, and snags, and replace bags as needed. Check gravel bags for proper arrangement and displacement.
- Sediment that accumulates in the BMP should be periodically removed in order to maintain BMP effectiveness. Sediment should be removed when the sediment accumulation reaches one-third of the barrier height.
- Inspect and maintain temporary geotextile insert devices according to manufacturer's specifications.
- Remove storm drain inlet protection once the drainage area is stabilized.

- Clean and regrade area around the inlet and clean the inside of the storm drain inlet, as it should be free of sediment and debris at the time of final inspection.

References

Stormwater Quality Handbooks - Construction Site Best Management Practices (BMPs) Manual, State of California Department of Transportation (Caltrans), March 2003.

Stormwater Management Manual for The Puget Sound Basin, Washington State Department of Ecology, Public Review Draft, 1991.

Erosion and Sediment Control Manual, Oregon Department of Environmental Quality, February 2005.

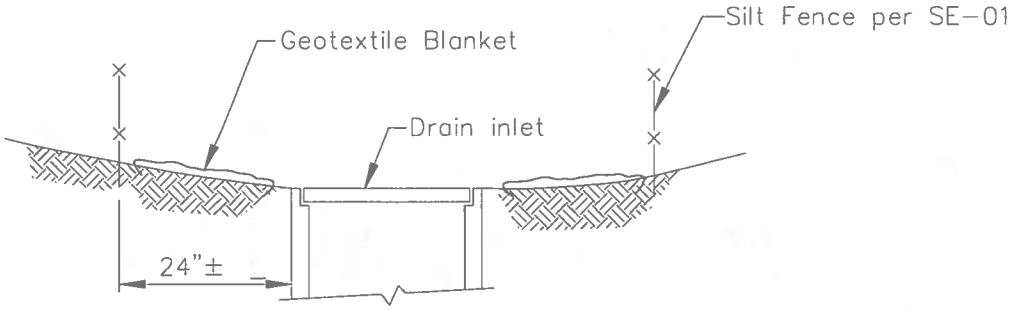

SECTION A–A

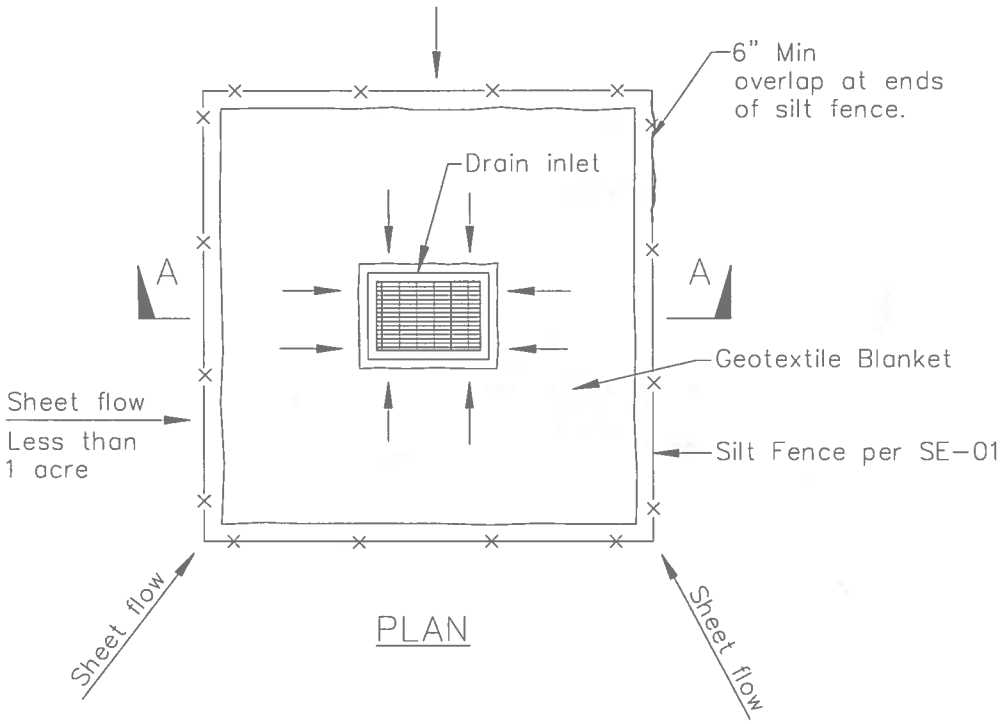

PLAN

DI PROTECTION TYPE 1
NOT TO SCALE

NOTES:

1. For use in areas where grading has been completed and final soil stabilization and seeding are pending.
2. Not applicable in paved areas.
3. Not applicable with concentrated flows.

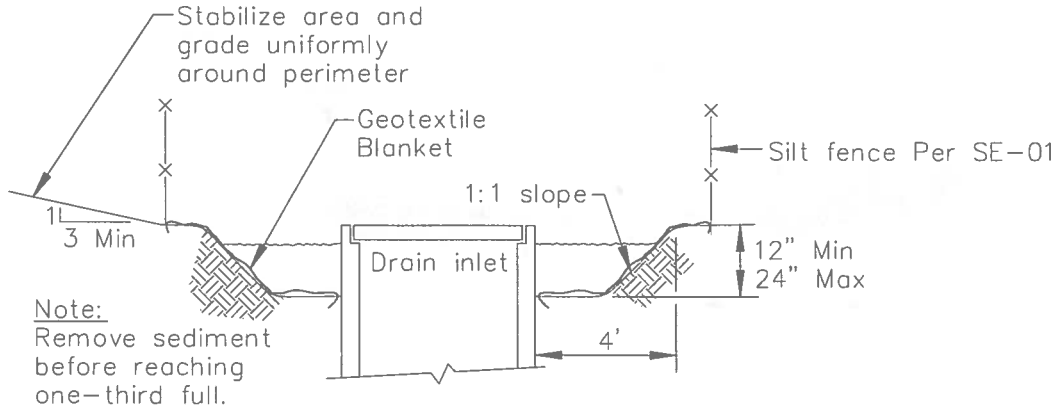

Section A–A

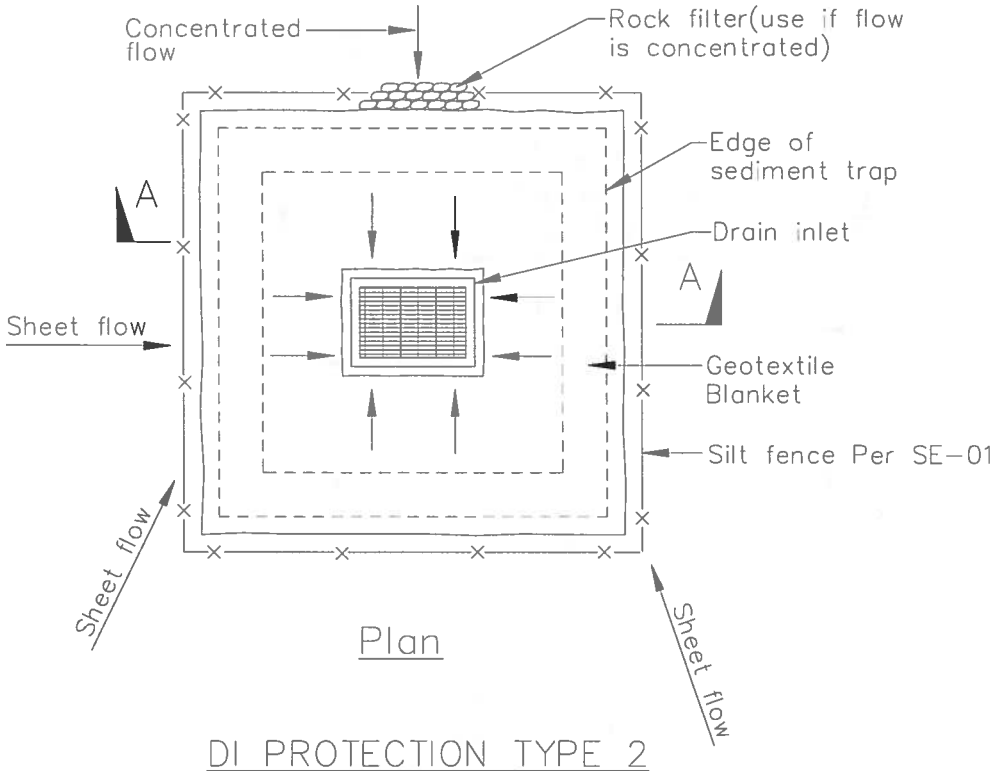

Plan

DI PROTECTION TYPE 2
NOT TO SCALE

Notes
1. For use in cleared and grubbed and in graded areas.
2. Shape basin so that longest inflow area faces longest length of trap.
3. For concentrated flows, shape basin in 2:1 ratio with length oriented towards direction of flow.

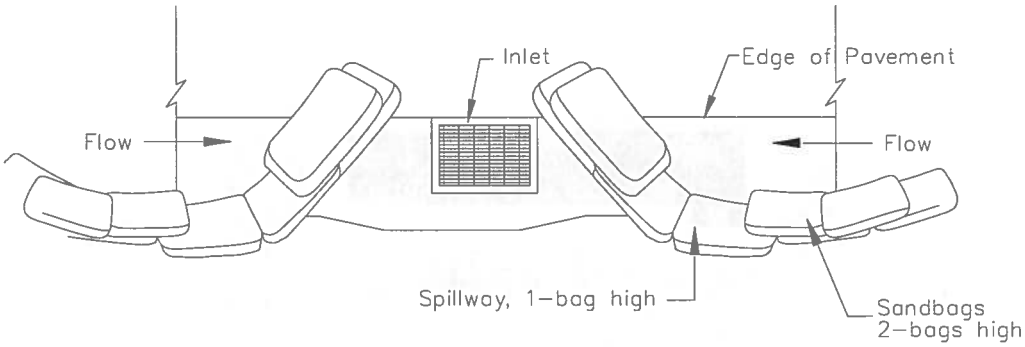

TYPICAL PROTECTION FOR INLET ON SUMP

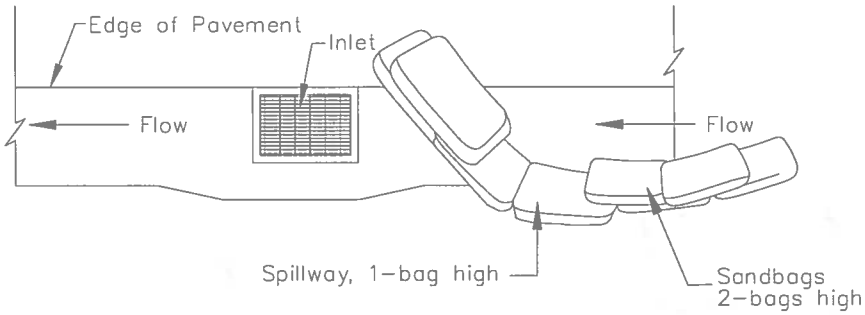

TYPICAL PROTECTION FOR INLET ON GRADE

NOTES:

1. Intended for short-term use.
2. Use to inhibit non-storm water flow.
3. Allow for proper maintenance and cleanup.
4. Bags must be removed after adjacent operation is completed
5. Not applicable in areas with high silts and clays without filter fabric.

DI PROTECTION TYPE 3
NOT TO SCALE

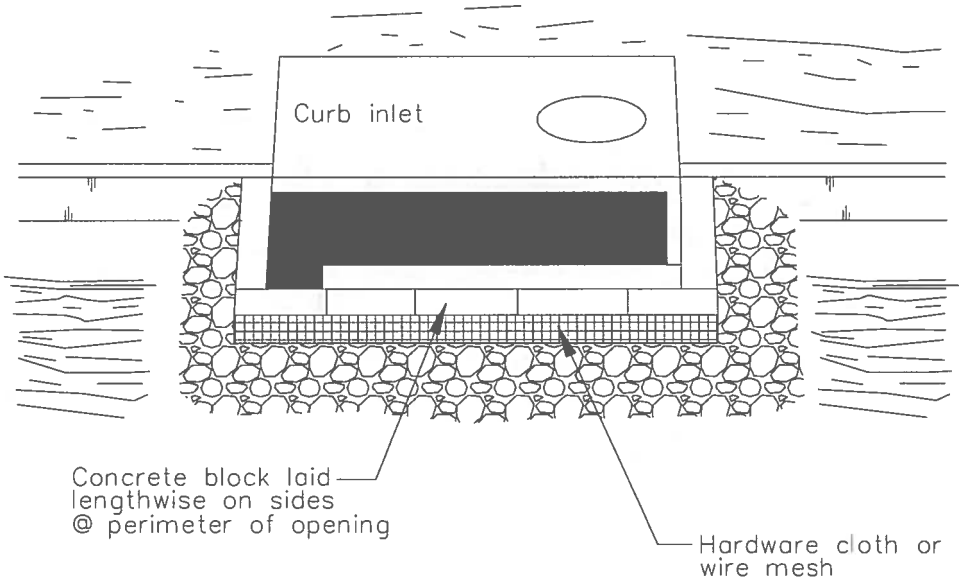

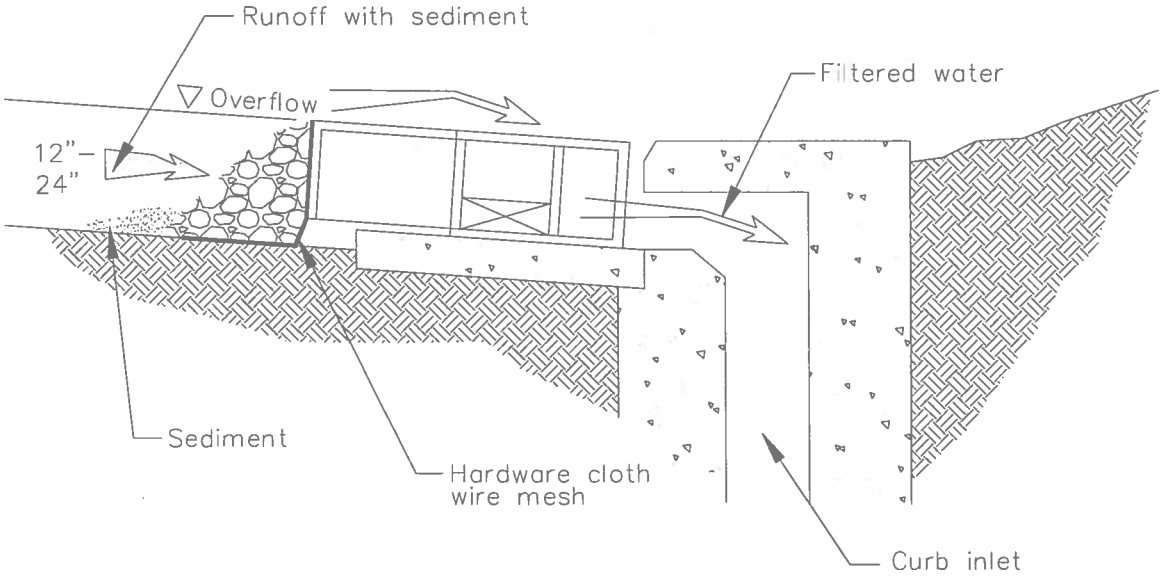

DI PROTECTION – TYPE 4

NOT TO SCALE

Active Treatment Systems SE-11

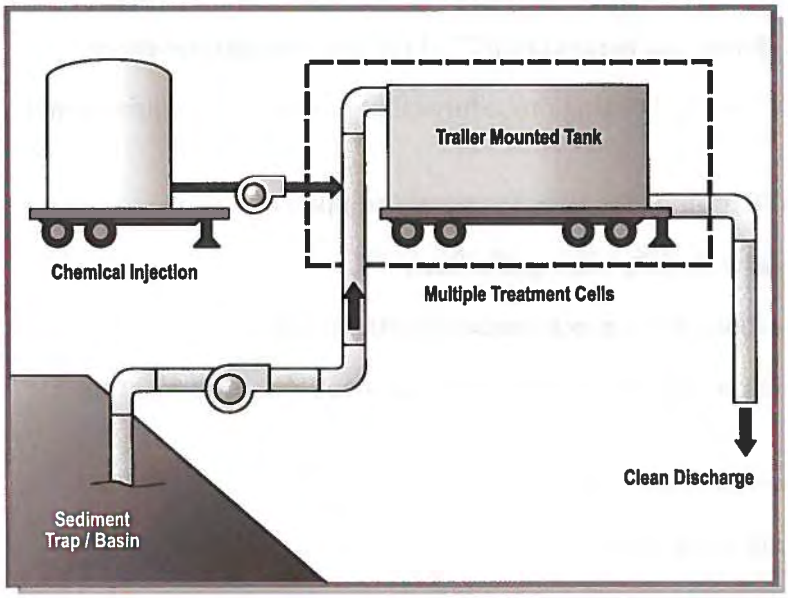

Categories

EC	Erosion Control	☑
SE	Sediment Control	
TC	Tracking Control	
WE	Wind Erosion Control	
NS	Non-Stormwater Management Control	
WM	Waste Management and Materials Pollution Control	

Legend:

☑ **Primary Category**

☒ **Secondary Category**

Targeted Constituents

Sediment	☑
Nutrients	
Trash	
Metals	
Bacteria	
Oil and Grease	
Organics	

Potential Alternatives

None

Description and Purpose

Active Treatment Systems (ATS) reduce turbidity of construction site runoff by introducing chemicals to stormwater through direct dosing or an electrical current to enhance flocculation, coagulation, and settling of the suspended sediment. Coagulants and flocculants are used to enhance settling and removal of suspended sediments and generally include inorganic salts and polymers (USACE, 2001). The increased flocculation aids in sedimentation and ability to remove fine suspended sediments, thus reducing stormwater runoff turbidity and improving water quality.

Suitable Applications

ATS can reliably provide exceptional reductions of turbidity and associated pollutants and should be considered where turbid discharges to sediment and turbidity sensitive waters cannot be avoided using traditional BMPs. Additionally, it may be appropriate to use an ATS when site constraints inhibit the ability to construct a correctly sized sediment basin, when clay and/or highly erosive soils are present, or when the site has very steep or long slope lengths.

Limitations

Dischargers choosing to utilize chemical treatment in an ATS must follow all guidelines of the Construction General Permit Attachment F – Active Treatment System Requirements. General limitations are as follows:

- Numeric Effluent Limit (NEL) for all discharges (10 NTU daily flow-weighted average)
- Limited availability of chemical residual testing procedures that meet permit requirements for flow-through treatment
- Specific field and classroom ATS training required to operate equipment
- Batch treatment requires extensive toxicity testing of effluent
- Batch treatment requires large footprint to accommodate treatment cells
- Requires additional filtration to remove residual floc and treatment chemicals prior to discharge
- Petroleum based polymers should not be used
- Requires site-specific design and equipment
- Limited discharge rates depending on receiving water body
- Labor intensive operation and maintenance
- ATS costs are higher on a unit basis for smaller sites that would be expected to have a lower volume of treated runoff
- ATS costs are seasonably variable due to increases or decreases in rainfall volumes

Implementation

Turbidity is difficult to control once fine particles are suspended in stormwater runoff from a construction site. Sedimentation ponds are effective at removing larger particulate matter by gravity settling, but are ineffective at removing smaller particulates such as clay and fine silt. Sediment ponds are typically designed to remove sediment no smaller than medium silt (0.02 mm). ATS may be used to reduce the turbidity of stormwater runoff. With an ATS, very high turbidities can be reduced to levels comparable to what is found in streams during dry weather.

Criteria for ATS Product Use

Chemically treated stormwater discharged from construction sites must be non-toxic to aquatic organisms. The following protocol should be used to evaluate chemicals proposed for stormwater treatment at construction sites. Authorization to use a chemical in the field based on this protocol does not relieve the applicant from responsibility for meeting all discharge and receiving water criteria applicable to a site.

- An ATS Plan, which includes an Operation and Maintenance component, a Monitoring, Sampling and Reporting component, a Health and Safety component, and a Spill Prevention component must be prepared and submitted to the Regional Water Quality Control Board (RWQCB).

- Treatment chemicals should be approved by EPA for potable water use or otherwise be demonstrated to be protective of human health and the environment. Chemical residual or whole effluent toxicity testing is required.
- Prior to field use of chemical treatment, jar tests are to be conducted to demonstrate that turbidity reduction necessary to meet the NELs and receiving water criteria can be achieved. Test conditions, including but not limited to raw water quality and jar test procedures, should be indicative of field conditions. Although these small-scale tests cannot be expected to reproduce performance under field conditions, they are indicative of treatment capability. A minimum of six site-specific jar tests must be conducted per chemical.
- The proposed maximum dosage should be at least a factor of five lower than the no observed effects concentration (NOEC).
- Effluent discharge from an ATS to a receiving water is conditional upon the favorable results of full-scale whole effluent bioassay/toxicity testing for batch treatment systems and upon chemical residuals testing for flow-through systems.
- Contact the RWQCB for a list of treatment chemicals that may be pre-approved for use.

Active Treatment System Design Considerations

The design and operation of an ATS should take into consideration the factors that determine optimum, cost-effective performance. While site characteristics will influence system design, it is important to recognize the following overriding considerations:

- The right chemical must be used at the right dosage. A dosage that is either too low or too high will not produce the lowest turbidity. There is an optimum dosage rate. This is a situation where the adage "adding more is always better" is not the case.
- The coagulant must be mixed rapidly into the water to insure proper dispersion.
- The mixing system for batch treatment must be sized to provide adequate mixing for the design storage volume. Lack of adequate mixing during the flocculation phase results in flocs that are too small and/or insufficiently dense. Too much mixing can rapidly destroy floc as it is formed.
- Care must be taken in the design of the withdrawal system to minimize outflow velocities and to prevent floc discharge. The discharge should be directed through a filtration system such as sand, bag, or cartridge filter that would catch any unintended floc discharge.
- ATS is also regulated for pH of the discharge. A pH-adjusting chemical should be added into the treated water to control pH if the selected coagulant requires alteration of the pH of the discharge outside of the acceptable range.

Active Treatment System Design

ATS can be designed as batch treatment systems using either ponds or portable trailer-mounted tanks, or as flow-through systems using any number of proprietary designed systems.

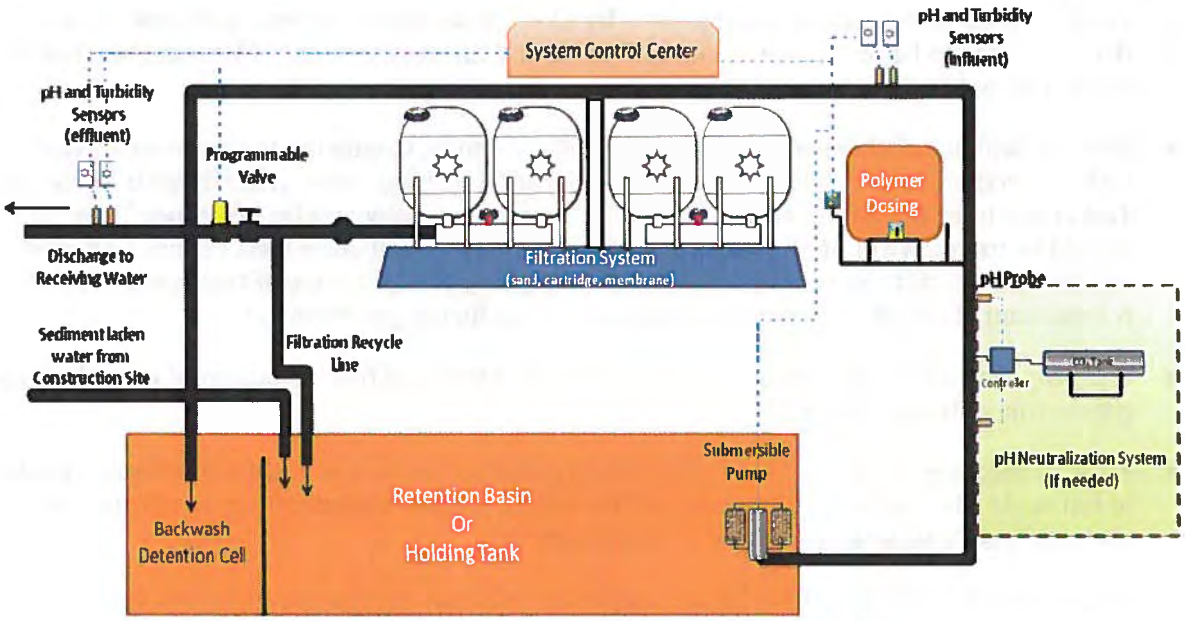

Figure has been adapted from Port of Seattle response to Washington Dept. of Ecology Action Order 2948

Batch Treatment

Batch Treatment systems consist of the stormwater collection system (either temporary diversion or the permanent site drainage system); a sediment basin, trap or holding tanks; pumps; a chemical feed system; treatment cells; and, interconnecting piping.

Batch treatment systems should use a minimum of two lined treatment cells. Multiple treatment cells allow for clarification of treated water while other cells are being filled or emptied. Treatment cells may be basins, traps, or tanks. Portable tanks may also be suitable for some sites.

The following equipment should be located in a secured, covered location:

- The chemical injector
- Secondary contaminant for acid, caustic, buffering compound, and treatment chemical
- Emergency shower and eyewash
- Monitoring equipment which consists of a pH meter and a turbidimeter (if not already within the instrumentation panel of the chemical injector)

Flow-through Treatment

At a minimum, a flow-through ATS system consists of the stormwater collection system (either temporary diversion or the permanent site drainage system), an untreated stormwater storage pond or holding tank, and a chemically enhanced filtration system.

Stormwater is collected at interception point(s) on the site and is diverted by gravity or by pumping to an untreated stormwater storage pond or other untreated stormwater holding area.

The stormwater is stored until treatment occurs. It is important that the holding pond be large enough to provide adequate storage.

Stormwater is then pumped from the untreated stormwater storage pond to the chemically enhanced filtration system where polymer is added. Adjustments to pH may be necessary before chemical addition. The filtration system continually monitors the stormwater for turbidity and pH. If the discharge water is out of the acceptable turbidity or pH range, the water is recycled to the untreated stormwater pond (or holding tank) where it can be retreated. Flow through systems must ensure that:

- Cumulative flow volume shall be recorded daily. The data recording system shall have the capacity to record a minimum of seven days of continuous data.
- Instrumentation systems are interfaced with system control to provide auto shutoff or recirculation in the event that effluent measurements exceed turbidity or pH.
- Upon system upset, power failure, or other catastrophic event, the ATS will default to a recirculation mode or safe shut down.
- The instrumentation system provides a method for controlling coagulant dose, to prevent potential overdosing.

Sizing Criteria

An ATS shall be designed and approved by a Certified Professional in Erosion and Sediment Control (CPESC), a Certified Professional in Storm Water Quality (CPSWQ); a California registered civil engineer; or any other California registered engineer.

ATS must be designed to capture and treat (within 72 hours) runoff from the 10-year 24-hour storm event. The runoff volume of the watershed area to be treated from this size storm event is required to be calculated using the Rational Method with a runoff coefficient of 1.

If sediment basins are used to capture flow-through or batch treatment, see SE-2, Sediment Basin, for design criteria. Bypass should be provided around the ATS to accommodate extreme storm events. Primary settling should be encouraged in the sediment basin/storage pond. A forebay with access for maintenance may be beneficial.

The permissible discharge rate governed by potential downstream effect should be used to calculate the recommended size of the treatment cells. Local requirements related to Phase I or Phase II NPDES permit thresholds should be considered in developing maximum discharge rates the ATS Plan.

Costs

Costs for ATS may be significant due to equipment rental requirements and cost of chemicals. ATS cost is lower on a treated unit-basis for large construction sites with large volumes of runoff.

Inspection and Maintenance

ATS must be operated and maintained by individuals with experience in their use and trained in accordance with training requirements below. ATS should be monitored continuously while in

use. A designated responsible person shall be on site daily at all times during treatment operations. Daily on-site visual monitoring of the system for proper performance shall be conducted and recorded in the project data log. The name, phone number, and training documentation of the person responsible for system operation and monitoring shall be included in the project data log.

The following monitoring requirements and results should be recorded in the data log:

Operational and Compliance Monitoring

- Effluent flow rate and volume shall be continuously monitored and recorded at 15- minute or less intervals.
- Influent and effluent pH must be continuously monitored and recorded at 15-minute or less intervals.
- Influent and effluent turbidity (expressed in NTU) must be continuously monitored and recorded at 15-minute or less intervals.
- The type and amount of chemical used for pH adjustment, if any, shall be monitored and recorded.
- Dose rate of chemical used in the ATS system (expressed in mg/L) shall be monitored and reported 15-minutes after startup and every 8 hours of operation.
- Laboratory duplicates – monthly laboratory duplicates for residual coagulant analysis must be performed and records shall be maintained onsite.
- Effluent shall be monitored and recorded for residual chemical/additive levels.
- If a residual chemical/additive test does not exist and the ATS is operating in a batch treatment mode of operation refer to the toxicity monitoring requirements below.

Toxicity Monitoring

Batch Treatment

Toxicity testing for systems operated in batch treatment mode should be made in accordance with the following:

- Acute toxicity testing on effluent samples representing effluent from each batch prior to discharge shall be undertaken. All bioassays shall be sent to a laboratory certified by the Department of Health Services (DHS) Environmental Laboratory Accreditation Program (ELAP). The required field of testing number for Whole Effluent Toxicity (WET) testing is E113.
- Acute toxicity tests shall be conducted with the following species and protocols. The methods to be used in the acute toxicity testing shall be those outlined for a 96-hour acute test in "Methods for Measuring the Acute Toxicity of Effluents and Receiving Water to Freshwater and Marine Organisms, USEPA-841-R-02-012" for Fathead minnow, *Pimephales promelas*. Rainbow trout, *Oncorhynchus mykiss*, may be used as a substitute for fathead minnow.

All toxicity tests shall meet quality assurance criteria and test acceptability criteria in the most recent versions of the EPA test method for WET testing.

Flow-through Treatment

Toxicity testing for systems operated in flow-through treatment mode should be made in accordance with the following:

- A residual chemical test method shall be used that has a method detection limit (MDL) of 10% or less than the maximum allowable threshold concentration (MATC) for the specific coagulant in use and for the most sensitive species of the chemical used. The MATC is equal to the geometric mean of the No Observed Effect Concentration (NOEC) and Lowest Observed Effect Concentration (LOEC) Acute and Chronic toxicity results for most sensitive species determined for the specific coagulant.
- The residual chemical test method shall produce a result within one hour of sampling.
- A California State certified laboratory shall validate the selected residual chemical test. Specifically the lab will review the test protocol, test parameters, and the detection limit of the coagulant. The discharger shall electronically submit this documentation as part of the ATS Plan.

Numeric Effluent Limit (NEL) Compliance:

All chemically treated stormwater must be sampled and tested for compliance with pH and turbidity limits. These limits have been established by the Construction General Permit. Sampling and testing for other pollutants may also be necessary at some sites. Turbidity limits have been set as 10 NTU as a daily flow-weighted average or 20 NTU from a single sample. pH must be within the range of 6.0 to 9.0 standard units. It is often possible to discharge treated stormwater that has a lower turbidity than the receiving water and that matches the pH.

Treated stormwater samples and measurements should be taken from the discharge pipe or another location representative of the nature of the treated stormwater discharge. Samples used for determining compliance with the water quality standards in the receiving water should not be taken from the treatment pond prior to decanting. Compliance with the water quality standards is determined in the receiving water.

Operator Training:

Operators shall have training specific to using an ATS and liquid coagulants for stormwater discharges in California. The training shall be in the form of a formal class with a certificate and requirements for testing and certificate renewal. Training shall include a minimum of eight hours classroom and 32 hours field training.

Standard BMPs:

Erosion and sediment control BMPs should be implemented throughout the site to prevent erosion and discharge of sediment to the ATS. Some types of chemical coagulation and flocculation are only achievable in water below a certain turbidity; therefore minimizing the amount of sediment reaching the system will increase the likelihood of meeting effluent limits and will potentially lower costs of chemical dosing.

Sediment Removal and Disposal

- Sediment shall be removed from the storage or treatment cells as necessary to ensure that the cells maintain their required water storage (i.e., volume) capability.
- Handling and disposal of all solids generated during ATS operations shall be done in accordance with all local, state, and federal laws and regulations.
- If sediment is determined to be non-toxic, it may be incorporated into the site away from drainages.

References

Engineering and Design – Precipitation/Coagulation/Flocculation. United States Army Corps of Engineers, EM 1110-1-4012, 2001.

Evaluation of Active Treatment Systems (ATS) for Construction Site Runoff. California Building and Industry Association (prepared by Geosyntec Consultants), 2008.

Stormwater Management Manual for Western Washington, Volume II – Construction Stormwater Pollution Prevention, Washington State Department of Ecology, August 2001.

Stormwater Quality Handbooks - Construction Site Best Management Practices (BMPs) Manual, State of California Department of Transportation (Caltrans), November 2000.

Temporary Silt Dike SE-12

Categories

EC	Erosion Control	☒
SE	Sediment Control	☑
TC	Tracking Control	
WE	Wind Erosion Control	
NS	Non-Stormwater Management Control	
WM	Waste Management and Materials Pollution Control	

Legend:

☑ **Primary Category**

☒ **Secondary Category**

Description and Purpose

Temporary silt dikes are pre-manufactured devices that are typically specified and installed for semi-permanent drainage and sediment control on the perimeter of disturbed sites or stockpiles and as check dams within channels.

Suitable Applications

Temporary silt dikes are generally used in areas as a substitute for fiber rolls and silt fences to slow down runoff water, divert drainage or contain fines and sediment. A temporary silt dike typically consists of a triangular foam or recycled rubber core covered in geotextile fabric. Temporary silt dikes are a linear control and have a variety of profiles (triangular, round, and square). Temporary silt dikes may be suitable for:

- On paved surfaces for perimeter protection.
- As check structures in channels.
- Along the perimeter of disturbed sites in lieu of silt fence.
- At operational storm drains as a form of inlet protection.
- Around temporary stockpiles or material/equipment storage areas.
- At the interface between graveled driveways and pavement.
- Along the toe of exposed and erodible slopes.

Targeted Constituents

Sediment	☑
Nutrients	
Trash	☒
Metals	
Bacteria	
Oil and Grease	
Organics	

Potential Alternatives

SE-1 Silt Fence

SE-5 Fiber Roll

SE-6 Gravel Bag Berm

SE-8 Sandbag Barrier

CASQA
CALIFORNIA STORMWATER QUALITY ASSOCIATION

Limitations

- Temporary silt dikes require additional measures to adhere to asphalt in cold and windy climates, as glue may not adhere adequately to the pavement.
- Temporary silt dikes may not be appropriate for drainage areas greater than 5 acres.
- Runoff will pond upstream of the barrier, possibly causing flooding or bypass if sufficient space does not exist to accommodate ponding.
- Temporary silt dikes may require frequent maintenance especially when used near vehicle traffic or to detain concentrated flows (e.g. check dams or inlet protection).
- When used to detain concentrated flows, maintenance requirements increase.

Implementation

General

When appropriately placed, temporary silt dikes intercept and slow sheet flow runoff, causing temporary ponding. The temporary ponding provides quiescent conditions allowing sediment to settle. The core is porous, which allows the ponded runoff to flow slowly through the silt dike, releasing the runoff as sheet flows. Generally, temporary silt dikes should be used in conjunction with temporary soil stabilization controls up slope to provide effective erosion and sediment control or as a non-stormwater perimeter control.

Design and Layout

- Temporary silt dikes used on soil should be attached to the ground per manufacturer specifications.
- Temporary silt dikes used on asphalt or concrete may be attached using a variety of methods, including nailing the dikes to the pavement, or using a high strength adhesive.
- Follow manufacturer specifications when installing temporary silt dikes.
- Allow sufficient space up slope from the silt dikes to allow ponding, and to provide room for sediment storage.
- For installation near the toe of the slope, temporary silt dike should be set back three feet from the slope toe to facilitate cleaning. Where site conditions do not allow set back, the silt dike may be constructed on the toe of the slope. To prevent flows behind the barrier, bags can be placed perpendicular to a berm to serve as cross barriers.
- Drainage area should not exceed 5 acres.
- Butt ends of temporary silt dike tightly. Overlaps should be sealed in accordance with the manufacturer's detail.

Materials

- Several manufactured products are available.

Costs

- Silt dike averages $35-45 per 7 ft. section.

Inspection and Maintenance

- BMPs must be inspected in accordance with General Permit requirements for the associated project type and risk level. It is recommended that at a minimum, BMPs be inspected weekly, prior to forecasted rain events, daily during extended rain events, and after the conclusion of rain events.
- Temporary silt dike exposed to sunlight will need to be replaced more frequently due to photo-degradation.
- Reshape or replace sections of damaged temporary silt dike as needed.
- Repair washouts or other damage as needed.
- Sediment that accumulates behind the BMP should be periodically removed in order to maintain BMP effectiveness. Sediment should be removed when the sediment accumulation reaches one-third of the barrier height.
- Remove temporary silt dikes when no longer needed. Remove sediment accumulation and clean, re-grade, and stabilize the area. Removed sediment should be incorporated in the project or disposed of properly.

References

Stormwater Quality Handbooks - Construction Site Best Management Practices (BMPs) Manual, State of California Department of Transportation (Caltrans), March 2003.

Erosion and Sediment Control Manual, Oregon Department of Environmental Quality, February 2005.

Compost Socks and Berms SE-13

Description and Purpose

Compost socks and berms act as three-dimensional biodegradable filtering structures to intercept runoff where sheet flow occurs and are generally placed at the site perimeter or at intervals on sloped areas. Compost socks are generally a mesh sock containing compost and a compost berm is a dike of compost, trapezoidal in cross section. When employed to intercept sheet flow, both BMPs are placed perpendicular to the flow of runoff, allowing filtered runoff to pass through the compost and retaining sediment (and potentially other pollutants). A compost sock can be assembled on site by filling a mesh sock (e.g. with a pneumatic blower). The compost berm should be constructed using a backhoe or equivalent and/or a pneumatic delivery (blower) system and should be properly compacted. Compost socks and berms act as filters, reduce runoff velocities, and in some cases, aid in establishing vegetation.

Compost is organic, biodegradable, and renewable. Compost provides soil structure that allows water to infiltrate the compost medium which helps prevent rill erosion and the retained moisture promotes seed germination and vegetation growth, in addition to providing organic matter and nutrients important for fostering vegetation. Compost improves soil quality and productivity, as well as erosion and sediment control. The compost of the compost sock or berm can be selected that targets site specific objectives in capturing sediment and other pollutants, supporting vegetation, or additional erosion control.

Categories

EC	Erosion Control	☒
SE	Sediment Control	☑
TC	Tracking Control	
WE	Wind Erosion Control	
NS	Non-Stormwater Management Control	
WM	Waste Management and Materials Pollution Control	

Legend:

☑ **Primary Category**

☒ **Secondary Category**

Targeted Constituents

Sediment	☑
Nutrients	
Trash	
Metals	☒
Bacteria	☒
Oil and Grease	☒
Organics	

Potential Alternatives

SE-1 Silt Fence

SE-5 Fiber Roll

SE-6 Gravel Bag Berm

SE-8 Sandbag Barrier

SE-14 Biofilter Bags

CASQA
CALIFORNIA STORMWATER QUALITY ASSOCIATION

Compost is typically derived from combinations of feedstocks, biosolids, leaf and yard trimmings, manure, wood, or mixed solid waste. Many types of compost are products of municipal recycle or "Greenwaste" programs. Compost is organic and biodegradable and can be left onsite. There are many types of compost with a variety of properties with specific functions, and accordingly compost selection is an important design consideration in the application of this type of erosion and sediment control.

Suitable Applications

- Along the toe, top, face, and at grade breaks of exposed and erodible slopes to shorten slope length and spread runoff as sheet flow (compost berms should only be used at the top of slopes or on slopes 4:1 (H:V) or flatter, all other slope applications should use compost socks)
- Along the perimeter of a project
- As check dams in unlined ditches (compost socks only)
- Down-slope of exposed soil areas
- At operational storm drains as a form of inlet protection (compost socks only)
- Around temporary stockpiles

Compost socks and berms do not require special trenching or BMP removal compared to other sediment control methods (e.g. silt fence or fiber rolls). Compost socks and berms can remain in place after earth disturbing activities are completed or the compost components can be spread over the site providing nutrients for plant growth and augmenting soil structure. BMPs that remain in place are particularly advantageous below embankments, especially adjacent streams, by limiting re-entry and the disturbance to sensitive areas.

Compost can be pre-seeded prior to application (recommended by the EPA for construction site stormwater runoff control and required for compost socks) or seeded after installation (for compost berms only). The compost medium can also remove pollutants in stormwater including heavy metals; oil and grease; and hydrocarbons.

Limitations

- Compost can potentially leach nutrients (dissolved phosphorus and nitrogen) into runoff and potentially impact water quality. Compost should not be used directly upstream from nutrient impaired waterbodies (Adams et. al, 2008).
- Compost may also contain other undesirable constituents that are detrimental to water quality. Compost should be obtained from a supplier certified by the California Integrated Waste Management Board or compost should otherwise meet the environmental health standards of Title 14, California Code of Regulations, Division 7, Chapter 3.1, Article 7. Carefully consider the qualifications and experience of any compost producer/supplier.
- Application by hand is more time intensive and potentially costly. Using a pneumatic blower truck is the recommended cost effective method of assembly.
- Compost socks and berms should not be employed at the base of slopes greater than 2:1 (H:V). They can be employed with other erosion control methods for steeper slopes.

- Difficult to move once saturated.
- Compost berms should not be applied in areas of concentrated flows.
- Compost socks and berms are easy to fix; however, they are susceptible to damage by frequent traffic. Compost socks can be used around heavy machinery, but regular disturbance decreases sock performance.

Implementation

Compost Materials

- California Compost Regulations (Title 14, California Code of Regulations, Division 7, Chapter 3.1, Article 7, Section 17868.3) define and require a quality of compost for application. Compost should comply with all physical and chemical requirements. Specific requirements are provided in Table 1, taken from Caltrans Standard Special Provision 10-1 (SSP 10-1), Erosion Control (Compost Blanket).
- The compost producer should be fully permitted as specified under the California Integrated Waste Management Board, Local Enforcement Agencies and any other State and Local Agencies that regulate Solid Waste Facilities. If exempt from State permitting requirements, the composting facility should certify that it follows guidelines and procedures for production of compost meeting the environmental health standards of Title 14, California Code of Regulations, Division 7, Chapter 3.1, Article 7.
- The compost producer should be a participant in United States Composting Council's Seal of Testing Assurance program.
- Compost medium parameter specifications for compost socks and berms have been developed to assist in compost selection, such as those provided by the American Association of State Highway Transportation Officials (AASHTO).
- Particle size is important parameter for selecting compost. Well consolidated coarser grades of compost (e.g. small and large pieces) perform better for filtration objectives, while finer grades better support vegetation. Particle size of the compost should be selected based on site conditions, such as expected precipitation, and filtration goals and / or long term plant nutrients.
- Compost moisture should be considered for composition quality and application purposes. A range of 30-50% is typical. Compost that is too dry is hard to apply and compost that is too wet is more difficult (and more expensive) to transport. For arid or semi-arid areas, or for application during the dry season, use compost with greater moisture content than areas with wetter climates. For wetter or more humid climates or for application during the wet season, drier composts can be used as the compost will absorb moisture from the ambient air.
- If vegetation establishment is a desired function of the compost, a compost sample should be inspected by a qualified individual. Vegetation has different nutrient and moisture needs.
- Organic content of the compost is also important and should range from 30 to 65% depending on site conditions.

- Compost should not be derived from mixed municipal solid waste and should be reasonably free of visible contaminates.
- Compost should not contain paint, petroleum products, pesticides or any other chemical residues harmful to animal life or plant growth. Metal concentrations in compost should not exceed the maximum metal concentrations listed under Title 14, California Code of Regulations, Division 7, Chapter 3.1, Section 17868.2.
- Compost should not possess objectionable odors.
- Compost should be weed free.

Table 1. Physical/Chemical Requirements of Compost
Reference - Caltrans SSP-10 Erosion Control Blanket (Compost)

Property	Test Method	Requirement
pH	*TMECC 04.11-A Elastometric pH 1:5 Slurry Method pH Units	6.0–8.0
Soluble Salts	TMECC 04.10-A Electrical Conductivity 1:5 Slurry Method dS/m (mmhos/cm)	0-10.0
Moisture Content	TMECC 03.09-A Total Solids & Moisture at 70+/- 5 deg C % Wet Weight Basis	30-60
Organic Matter Content	TMECC 05.07-A Loss-On-Ignition Organic Matter Method (LOI) % Dry Weight Basis	30–65
Maturity	TMECC 05.05-A Germination and Vigor Seed Emergence Seedling Vigor % Relative to Positive Control	80 or Above 80 or Above
Stability	TMECC 05.08-B Carbon Dioxide Evolution Rate mg CO_2-C/g OM per day	8 or below
Particle Size	TMECC 02.02-B Sample Sieving for Aggregate Size Classification % Dry Weight Basis	100% Passing, 3 inch 90-100% Passing, 1 inch 65-100% Passing, 3/4 inch 0 - 75% Passing, 1/4 inch Maximum length 6 inches
Pathogen	TMECC 07.01-B Fecal Coliform Bacteria < 1000 MPN/gram dry wt.	Pass
Pathogen	TMECC 07.01-B Salmonella < 3 MPN/4 grams dry wt.	Pass
Physical Contaminants	TMECC 02.02-C Man Made Inert Removal and Classification: Plastic, Glass and Metal % > 4mm fraction	Combined Total: < 1.0
Physical Contaminants	TMECC 02.02-C Man Made Inert Removal and Classification: Sharps (Sewing needles, straight pins and hypodermic needles) % > 4mm fraction	None Detected

*TMECC refers to "Test Methods for the Examination of Composting and Compost," published by the United States Department of Agriculture and the United States Compost Council (USCC).

Installation

- Prior to application, prepare locations for socks and berms by removing brush and thick vegetation. The compost of the sock and/or berm should be allowed to come in full contact with the ground surface.
- Select method to apply the compost sock or berm. A pneumatic blower is most cost effective and most adaptive in applying compost to steep, rough terrain, and hard to reach locations.
- The compost of the berm should be distributed evenly to the surface, compacted, and shaped trapezoidal in cross section. Berm design is generally consists of a base two times the height. AASHTO specification MP 9-03 provides compost berm dimensions based on anticipated site precipitation (AASHTO, 2003 and USEPA, 2009). State agencies, such as Oregon

Department of Environmental Quality (ODEQ) have developed berm dimension based on slope steepness and length (ODEQ, 2004).

- Compost socks can be assembled on site by filling mesh socks with the selected compost. Mesh socks can be tied at one end, filled, and then tied at the other end. The ends of socks can be interlocked until the desired length is achieved. The sock diameter is a function of slope steepness and length. Again, ASSHTO provides specifications for various parameters. Compost socks range from 8" to 18", but are typically 12" to 18" in diameter.
- Compost socks are typically placed in contours perpendicular to sheet flow. They can also be placed in V formation on a slope. Compost socks need to be anchored, typically stakes, through the center of the sock. To prevent water flowing around them, the ends of compost socks should be placed upslope.
- Locate compost socks and berms on level contours spaced as follows:
  - Slope inclination of 4:1 (H:V) or flatter: Socks and/or berms should be placed at a maximum interval of 20 ft.
  - Slope inclination between 4:1 and 2:1 (H:V): Socks should be placed at a maximum interval of 15 ft. (a closer spacing is more effective).
  - Slope inclination 2:1 (H:V) or greater: Socks should be placed at a maximum interval of 10 ft. (a closer spacing is more effective).
- Place perimeter socks and berms using a j-hook installation. Use of vegetation will also provide additional anchoring.
- Compost socks and berms can be placed around the perimeter of an affected area, like a silt fence, if the area is flat or on a contour. Do not place these socks and berms where ponded water could become an issue.
- If used at the toe of slopes, the compost sock or berm should at a minimum of 5 to 10 feet away.
- Use additional anchoring and erosion control BMPS in conjunction of the compost socks and berms as needed.
- Consider using compost berms or socks as necessary at the top and/or bottom of the slope for additional erosion control performance.
- Compost socks and berms can also be effective over rocky and frozen ground if installed properly.
- It is recommended that the drainage areas of these compost BMPs do not exceed 0.25 acre per 100 feet placement interval and runoff does not exceed 1 cubic foot per second.

Costs

Recently obtained vendor costs indicated $3.50 per linear foot for compost berm application and $2.00 per linear foot for 8" socks and $2.50 per linear foot for 12"socks. Costs do not include final compost sock or berm functions at the end of construction activities, including spreading or removal, if required. ODEQ estimates that compost berms cost 30 percent less than silt fences to install.

Inspection and Maintenance

- BMPs must be inspected in accordance with General Permit requirements for the associated project type and risk level. It is recommended that at a minimum, BMPs be inspected weekly, prior to forecasted rain events, daily during extended rain events, and after the conclusion of rain events.

- Once damage is identified, mend or reapply the sock or berm as needed. Washed out areas should be replaced. If the sock or berm height is breached during a storm, an additional sock can be stacked to increase the sock height and similarly the berm dimensions can be increased, as applicable. An additional sock or berm may be installed upslope, as needed. It may be necessary to apply an additional type of stormwater BMP, such as a compost blanket.

- Sediment contained by the sock or berm should be removed prior reaching 1/3 of the exposed height of the BMP. The sediment can be stabilized with the compost sock or berm with vegetation at the end of construction activities.

- Care should be exercised to minimize the damage to protected areas while making repairs, as any area damaged will require reapplication of BMPs.

- Limit traffic to minimize damage to BMPs or impede vegetation establishment.

References

An analysis of Composting as an Environmental Remediation Technology, U.S. Environmental Protection Agency (USEPA), Solid Waste and Emergency Response (5305W), EPA530-R-8-008, 1998.

Characteristics of Compost: Moisture Holding and Water Quality Improvement, Center for Research in Water Resources, Kirchoff, C., Malina, J., and Barrett, M., 2003.

Compost Utilization for Erosion Control, The University of Georgia College of Agricultural and Environmental Sciences, pubs.caes.uga.edu/caespubs/pubcd/B1200.htm, Faucette, B. and Risse, M., 2001.

Erosion and Sediment Control Manual, Oregon Department of Environmental Quality, February 2005.

Standard Special Provision 10-1, Erosion Control (Compost Blanket), State of California Department of Transportation (Caltrans). 2007 Update.

Evaluation of Environmental Benefits and Impacts of Compost and Industry Standard Erosion and Sediment Controls Measures Used in Construction Activities, Dissertation, Institute of Ecology, University of Georgia, Faucette, B., 2004.

National Pollutant Discharge Elimination System (NPDES), Compost Blankets, U.S. Environmental Protection Agency (USEPA). http://cfpub.epa.gov/npdes/stormwater/menuofbmps/index.cfm?action=factsheet_results&view=specific&bmp=118, 2009.

Standard Specifications for Transportation Materials and Methods of Sampling and Testing, Designation MP-9, Compost for Erosion/Sediment Control (Filter Berms), Provisional, American Association of State Highway Transportation Officials (AASHTO), 2003.

Stormwater Best Management Practices (BMPs) Field Trials of Erosion Control Compost in Reclamation of Rock Quarry Operations, Nonpoint Source Protection Program CWA §319(h), Texas Commission on Environmental Quality, Adams, T., McFarland, A., Hauck, L., Barrett, M., and Eck, B., 2008.

Biofilter Bags SE-14

Categories

EC	Erosion Control	
SE	Sediment Control	☑
TR	Tracking Control	
WE	Wind Erosion Control	
NS	Non-Stormwater Management Control	
WM	Waste Management and Materials Pollution Control	

Legend:

☑ **Primary Category**

☒ **Secondary Category**

Targeted Constituents

Sediment	☑
Nutrients	
Trash	
Metals	
Bacteria	
Oil and Grease	
Organics	

Potential Alternatives

SE-1 Silt Fence

SE-4 Check Dams

SE-5 Fiber Roll

SE-6 Gravel Bag Berm

SE-8 Sandbag Barrier

SE-10 Storm Drain Inlet Protection

Description and Purpose

Biofilter bags, or bio-bags, are a multi-purpose sediment control BMP consisting of a plastic mesh bag filled with 100% recycled wood product waste. Biofilter bags come in a variety of sizes (30" X 18" and 30" X 9" being common) and generally have between 1-2 cubic yards of recycled wood waste (or wood chips). Biofilter bags work by detaining flow and allowing a slow rate of discharge through the wood media. This action removes suspended sediment through gravity settling of the detained water and filtration within the bag.

Suitable Applications

Biofilter bags are a short-term BMP that can be rapidly deployed, maintained, and replaced. Biofilter bags can be an effective short-term solution to place in developed rills to prevent further erosion until permanent measures can be established. Suitable short-term applications include:

- As a linear sediment control measure:
  - Below the toe of slopes and erodible slopes
  - Below other small cleared areas
  - Along the perimeter of a site (with low-expected flow)
  - Down slope of exposed soil areas
  - Around temporary stockpiles and spoil areas
  - Parallel to a roadway to keep sediment off paved areas

CASQA
CALIFORNIA STORMWATER QUALITY ASSOCIATION

- Along streams and channels

- As linear erosion control measure:
  - Along the face and at grade breaks of exposed and erodible slopes to shorten slope length and spread runoff as sheet flow
  - At the top of slopes to divert runoff away from disturbed slopes
  - As check dams across mildly sloped construction roads
- Inlet Protection (See SE-10)
- Supplement to silt fences or other sediment control devices

Limitations

- Short life-span (2-3 months); regular maintenance and replacement required to ensure effectiveness. Bags will rapidly fill with sediment and reduce permeability.
- Easily damaged by construction vehicles.
- If not properly staked, will fail on slope applications.
- If improperly installed can allow undercutting or side-cutting flow.
- Not effective where water velocities or volumes are high.
- Potentially buoyant and easily displaced if not properly installed.

Implementation

General

Biofilter bags are a relatively low cost temporary BMP that are easily deployed and have a simple installation that can be performed by hand. Without proper installation, however, biofilter bags can fail due to their light weight, potential displacement, and multiple joint locations. One of the benefits of utilizing biofilter bags is that the media (wood-product) can be recycled or used onsite when no longer needed (where acceptable).

Design and Layout – Linear control

- Locate biofilter bags on level contours.
  - Slopes between 20:1 and 4:1 (H:V): Biofilter bags should be placed at a maximum interval of 20 ft, with the first row near the slope toe.
  - Slopes between 4:1 and 2:1 (H:V): Biofilter bags should be placed at a maximum interval of 15 ft, with the first row near the slope toe.
  - Slopes 2:1 (H:V) or steeper: Biofilter bags should be placed at a maximum interval of 10 ft., with the first row placed the slope toe.

- Turn the ends of the biofilter bag barriers up slope to prevent runoff from going around the berm.
- Allow sufficient space up slope from the biofilter bag berm to allow ponding, and to provide room for sediment storage.
- Stake biofilter bags into a 1 to 2 in. deep trench with a width equal to the bag.
  - Drive one stake at each end of the bag.
  - Use wood stakes with a nominal classification of 0.75 by 0.75 in. and minimum length of 24 in.
- Biofilter bags should be overlapped (6 in.), not abutted.

Costs

Pre-filled biofilter bags cost approximately $2.50-$3.50 per bag, dependent upon size.

Inspection and Maintenance

- BMPs must be inspected in accordance with General Permit requirements for the associated project type and risk level. It is recommended that at a minimum, BMPs be inspected weekly, prior to forecasted rain events, daily during extended rain events, and after the conclusion of rain events.
- Biofilter bags exposed to sunlight will need to be replaced every two to three months due to degrading of the bags.
- Reshape or replace biofilter bags as needed.
- Repair washouts or other damage as needed.
- Sediment that is retained by the BMP should be periodically removed in order to maintain BMP effectiveness. Sediment should be removed when the sediment accumulation reaches one-third of the barrier height.
- Remove biofilter bag berms when no longer needed. Remove sediment accumulation and clean, re-grade, and stabilize the area. Biofilter media may be used on-site, if allowed.

References

Catalog of Stormwater Best Management Practices for Idaho Cities and Counties. Volume 2, Section 7, BMP 34 – Biofilter Bags, Idaho Department of Environmental Quality, 2005.

Erosion and Sediment Control Manual, Oregon Department of Environmental Quality, February 2005.

Stormwater Quality Handbooks Construction Site Best Management Practices (BMPs) Manual, State of California Department of Transportation (Caltrans), March 2003.

Wind Erosion Control WE-1

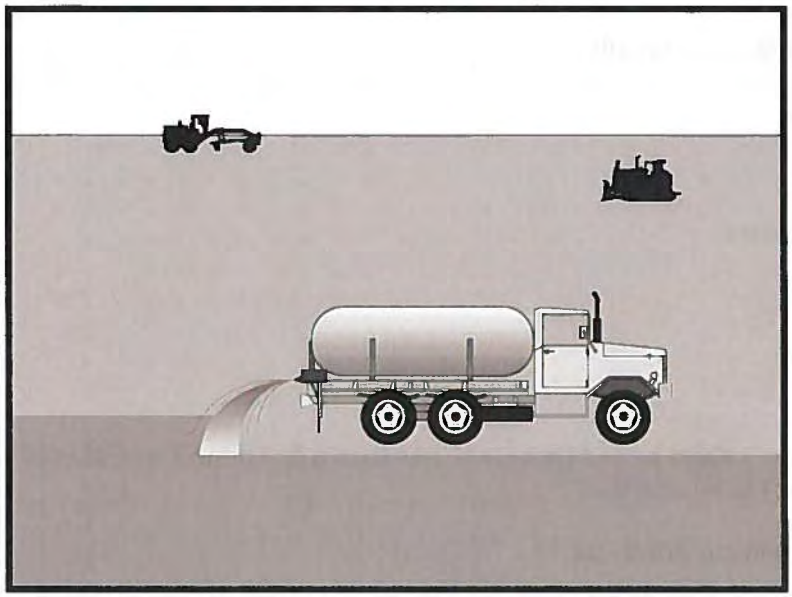

Categories

EC	Erosion Control	
SE	Sediment Control	☒
TC	Tracking Control	
WE	Wind Erosion Control	☑
NS	Non-Stormwater Management Control	
WM	Waste Management and Materials Pollution Control	

Legend:

☑ **Primary Category**

☒ **Secondary Category**

Targeted Constituents

Sediment	☑
Nutrients	
Trash	
Metals	
Bacteria	
Oil and Grease	
Organics	

Potential Alternatives

EC-5 Soil Binders

Description and Purpose

Wind erosion or dust control consists of applying water or other chemical dust suppressants as necessary to prevent or alleviate dust nuisance generated by construction activities. Covering small stockpiles or areas is an alternative to applying water or other dust palliatives.

California's Mediterranean climate, with a short "wet" season and a typically long, hot "dry" season, allows the soils to thoroughly dry out. During the dry season, construction activities are at their peak, and disturbed and exposed areas are increasingly subject to wind erosion, sediment tracking and dust generated by construction equipment. Site conditions and climate can make dust control more of an erosion problem than water based erosion. Additionally, many local agencies, including Air Quality Management Districts, require dust control and/or dust control permits in order to comply with local nuisance laws, opacity laws (visibility impairment) and the requirements of the Clean Air Act. Wind erosion control is required to be implemented at all construction sites greater than 1 acre by the General Permit.

Suitable Applications

Most BMPs that provide protection against water-based erosion will also protect against wind-based erosion and dust control requirements required by other agencies will generally meet wind erosion control requirements for water quality protection. Wind erosion control BMPs are suitable during the following construction activities:

CASQA
CALIFORNIA STORMWATER QUALITY ASSOCIATION

- Construction vehicle traffic on unpaved roads
- Drilling and blasting activities
- Soils and debris storage piles
- Batch drop from front-end loaders
- Areas with unstabilized soil
- Final grading/site stabilization

Limitations

- Watering prevents dust only for a short period (generally less than a few hours) and should be applied daily (or more often) to be effective.
- Over watering may cause erosion and track-out.
- Oil or oil-treated subgrade should not be used for dust control because the oil may migrate into drainageways and/or seep into the soil.
- Chemical dust suppression agents may have potential environmental impacts. Selected chemical dust control agents should be environmentally benign.
- Effectiveness of controls depends on soil, temperature, humidity, wind velocity and traffic.
- Chemical dust suppression agents should not be used within 100 feet of wetlands or water bodies.
- Chemically treated subgrades may make the soil water repellant, interfering with long-term infiltration and the vegetation/re-vegetation of the site. Some chemical dust suppressants may be subject to freezing and may contain solvents and should be handled properly.
- In compacted areas, watering and other liquid dust control measures may wash sediment or other constituents into the drainage system.
- If the soil surface has minimal natural moisture, the affected area may need to be pre-wetted so that chemical dust control agents can uniformly penetrate the soil surface.

Implementation

Dust Control Practices

Dust control BMPs generally stabilize exposed surfaces and minimize activities that suspend or track dust particles. The following table presents dust control practices that can be applied to varying site conditions that could potentially cause dust. For heavily traveled and disturbed areas, wet suppression (watering), chemical dust suppression, gravel asphalt surfacing, temporary gravel construction entrances, equipment wash-out areas, and haul truck covers can be employed as dust control applications. Permanent or temporary vegetation and mulching can be employed for areas of occasional or no construction traffic. Preventive measures include minimizing surface areas to be disturbed, limiting onsite vehicle traffic to 15 mph or less, and controlling the number and activity of vehicles on a site at any given time.

Chemical dust suppressants include: mulch and fiber based dust palliatives (e.g. paper mulch with gypsum binder), salts and brines (e.g. calcium chloride, magnesium chloride), non-petroleum based organics (e.g. vegetable oil, lignosulfonate), petroleum based organics (e.g. asphalt emulsion, dust oils, petroleum resins), synthetic polymers (e.g. polyvinyl acetate, vinyls, acrylic), clay additives (e.g. bentonite, montimorillonite) and electrochemical products (e.g. enzymes, ionic products).

Site Condition	Dust Control Practices							
	Permanent Vegetation	Mulching	Wet Suppression (Watering)	Chemical Dust Suppression	Gravel or Asphalt	Temporary Gravel Construction Entrances/Equipment Wash Down	Synthetic Covers	Minimize Extent of Disturbed Area
Disturbed Areas not Subject to Traffic	x	x	x	x	x			x
Disturbed Areas Subject to Traffic			x	x	x	x		x
Material Stockpiles		x	x	x			x	x
Demolition			x			x	x	
Clearing/ Excavation			x	x				x
Truck Traffic on Unpaved Roads			x	x	x	x	x	
Tracking					x	x		

Additional preventive measures include:

- Schedule construction activities to minimize exposed area (see EC-1, Scheduling).
- Quickly treat exposed soils using water, mulching, chemical dust suppressants, or stone/gravel layering.
- Identify and stabilize key access points prior to commencement of construction.
- Minimize the impact of dust by anticipating the direction of prevailing winds.
- Restrict construction traffic to stabilized roadways within the project site, as practicable.
- Water should be applied by means of pressure-type distributors or pipelines equipped with a spray system or hoses and nozzles that will ensure even distribution.
- All distribution equipment should be equipped with a positive means of shutoff.
- Unless water is applied by means of pipelines, at least one mobile unit should be available at all times to apply water or dust palliative to the project.
- If reclaimed waste water is used, the sources and discharge must meet California Department of Health Services water reclamation criteria and the Regional Water Quality

Control Board (RWQCB) requirements. Non-potable water should not be conveyed in tanks or drain pipes that will be used to convey potable water and there should be no connection between potable and non-potable supplies. Non-potable tanks, pipes, and other conveyances should be marked, "NON-POTABLE WATER - DO NOT DRINK."

- Pave or chemically stabilize access points where unpaved traffic surfaces adjoin paved roads.
- Provide covers for haul trucks transporting materials that contribute to dust.
- Provide for rapid clean up of sediments deposited on paved roads. Furnish stabilized construction road entrances and wheel wash areas.
- Stabilize inactive areas of construction sites using temporary vegetation or chemical stabilization methods.

For chemical stabilization, there are many products available for chemically stabilizing gravel roadways and stockpiles. If chemical stabilization is used, the chemicals should not create any adverse effects on stormwater, plant life, or groundwater and should meet all applicable regulatory requirements.

Costs

Installation costs for water and chemical dust suppression vary based on the method used and the length of effectiveness. Annual costs may be high since some of these measures are effective for only a few hours to a few days.

Inspection and Maintenance

- Inspect and verify that activity-based BMPs are in place prior to the commencement of associated activities.
- BMPs must be inspected in accordance with General Permit requirements for the associated project type and risk level. It is recommended that at a minimum, BMPs be inspected weekly, prior to forecasted rain events, daily during extended rain events, and after the conclusion of rain events.
- Check areas protected to ensure coverage.
- Most water-based dust control measures require frequent application, often daily or even multiple times per day. Obtain vendor or independent information on longevity of chemical dust suppressants.

References

Best Management Practices and Erosion Control Manual for Construction Sites, Flood Control District of Maricopa County, Arizona, September 1992.

California Air Pollution Control Laws, California Air Resources Board, updated annually.

Construction Manual, Chapter 4, Section 10, "Dust Control"; Section 17, "Watering"; and Section 18, "Dust Palliative", California Department of Transportation (Caltrans), July 2001.

Prospects for Attaining the State Ambient Air Quality Standards for Suspended Particulate Matter (PM10), Visibility Reducing Particles, Sulfates, Lead, and Hydrogen Sulfide, California Air Resources Board, April 1991.

Stormwater Quality Handbooks Construction Site Best Management Practices (BMPs) Manual, State of California Department of Transportation (Caltrans), March 2003.

GOLDER

golder.com

APPENDIX F:

ANNUAL GREENHOUSE GAS INVENTORY REPORT

Lehigh Southwest Cement Company
24001 Stevens Creek Boulevard
Cupertino, California 95014
(408) 996-4000

Memo

To:	Ms. Tressa Jackson	**From:**	Manjunath Shivalingappa
Copy:	NA	**Date:**	09-23-2019
Subject:	Annual Reclamation Plan Amendment Activities Greenhouse Gas Inventory		

Annual analysis of the Greenhouse Gas Emissions (GHG) associated with Reclamation Plan Amendment activities at the Lehigh Southwest Cement Company's Permanente Quarry (Quarry) in Santa Clara County, California. This inventory is pursuant to Conditions of Approval (COA) 71, 72, and 73 of the 2012 Reclamation Plan Amendment, for the reporting period of July 1, 2018 through June 30, 2019.

Methods and Thresholds

The methodology used in this memo to analyze the project's contribution to global climate change includes a calculation of GHG emissions associated with Reclamation Plan Amendment Activities, beyond baseline levels as described in the EIR[1], and a comparison of GHG emissions with the thresholds set forth in the COA. GHG emission would be considered significant and require mitigation if they exceed 1,100 metric tons of Carbon Dioxide equivalent ($CO2_e$) within a year. Reclamation Plan Amendment activities included, but not limited to, the following:

- Reclamation of slope, grading, and hauling of materials
- Maintenance of erosion control features
- Hydroseeding activities
- Sediment basin maintenance

The Bay Area Air Quality Management District (BAAQMD) recommends use of the California Emissions Estimator Model™ (CalEEMod) to estimate GHG emissions associated with construction of individual development projects and operational GHG emissions.[2] CalEEMod is a statewide land use emissions computer model designed to provide a uniform platform for government agencies, land use planners, and environmental professionals to quantify potential criteria pollutant and GHG emissions associated with both construction and operations from a variety of land use projects.[3] The mobile source emission factors used in the model (EMFAC2011) includes the Pavley standards and Low Carbon Fuel standards into the mobile

source emission factors. The model was developed in collaboration with the air districts of California. Default data (e.g., emission factors, trip lengths, meteorology, source inventory, etc.) have been provided by the various California air districts to account for local requirements and conditions.

GHG emissions associated with the projects were modeled using CalEEMod version 2013.2.2 using general project information provided to WRA. Project inputs and assumptions are summarized in the Table 1 below.

Table 1. Off-Road Reclamation Activities Diesel Equipment

Model	Equipment Type	Total Hours	HP*
John Deere	Back Hoe	116.5	69
Freightliner	Off-Highway Truck	50	300
460E ADT	Off-Highway Truck	4644.8	481
1050K crawler dozer	Dozer	450	350
944K Hybrid	Wheel Loader	928.96	536
410E Water Truck	Off-Highway Truck	450	443
**Horsepower (HP) figures are based on available information from equipment manufacturer specification sheets. Not all manufacturers listed gross HP figures; therefore net HP was utilized for calculations.*			

Greenhouse Gas Inventory Results

An inventory of reclamation activity emissions was taken for the period of July 1, 2018 through June 30, 2019. Total emissions for the study period were 688.34 metric tons of $CO2_e$. Emissions were below the threshold of 1,100 metric tons of $CO2_e$ as set in COA 71. Therefore, no offset or additional actions are required to mitigate for GHG emissions.

[1] Activities that are within the baseline, mining activities, ongoing before the 2012 Reclamation Plan Amendment are not included in these GHG calculations.
[2] BAAQMD CEQA Guidelines: Available at *http://www.baaqmd.gov/Divisions/Planning-and-Research/CEQA-GUIDELINES.aspx*
[3] http://www.caleemod.com/

Permanente Quarry 2018-2019

Santa Clara County, Annual

1.0 Project Characteristics

1.1 Land Usage

Land Uses	Size	Metric	Lot Acreage	Floor Surface Area	Population
	1.00		3,000.00	0.00	0

1.2 Other Project Characteristics

Urbanization	Urban	**Wind Speed (m/s)**	2.2	**Precipitation Freq (Days)**	58
Climate Zone	5			**Operational Year**	2018
Utility Company	Southern California Edison				
CO2 Intensity (lb/MWhr)	702.44	**CH4 Intensity (lb/MWhr)**	0.029	**N2O Intensity (lb/MWhr)**	0.006

1.3 User Entered Comments & Non-Default Data

Project Characteristics -

Land Use -

Construction Phase - Calculated approximate number of days

Off-road Equipment - Bhoe 116.5 11.65 at10hrs per day

Off-road Equipment - Total Hrs
Freightliner 50 5 at10hrs per day

Off-road Equipment - Art T 928.96 92.896 at10hrs per day
Doz 928.96 92.896 at10hrs per day
Load 928.96 92.896 at10hrs per day
Wat T 928.96 92.896 at10hrs per day

Trips and VMT - 0

Table Name	Column Name	Default Value	New Value
tblConstructionPhase	NumDays	6,000.00	5.00
tblConstructionPhase	NumDays	6,000.00	12.00
tblConstructionPhase	NumDays	6,000.00	93.00
tblConstructionPhase	PhaseEndDate	9/29/2042	7/6/2018
tblConstructionPhase	PhaseEndDate	9/28/2065	7/17/2018
tblConstructionPhase	PhaseEndDate	9/27/2088	11/7/2018
tblConstructionPhase	PhaseStartDate	10/1/2019	7/1/2018
tblConstructionPhase	PhaseStartDate	9/30/2042	7/1/2018
tblConstructionPhase	PhaseStartDate	9/29/2065	7/1/2018
tblOffRoadEquipment	HorsePower	247.00	350.00
tblOffRoadEquipment	HorsePower	97.00	69.00
tblOffRoadEquipment	HorsePower	402.00	300.00
tblOffRoadEquipment	HorsePower	402.00	481.00
tblOffRoadEquipment	HorsePower	402.00	443.00
tblOffRoadEquipment	HorsePower	203.00	536.00

tblOffRoadEquipment	LoadFactor	0.40	0.41
tblOffRoadEquipment	LoadFactor	0.38	0.40
tblOffRoadEquipment	LoadFactor	0.38	0.48
tblOffRoadEquipment	LoadFactor	0.36	0.40
tblOffRoadEquipment	OffRoadEquipmentUnitAmount	4.00	1.00
tblOffRoadEquipment	OffRoadEquipmentUnitAmount	3.00	1.00
tblOffRoadEquipment	OffRoadEquipmentUnitAmount	3.00	0.00
tblOffRoadEquipment	OffRoadEquipmentUnitAmount	3.00	0.00
tblOffRoadEquipment	OffRoadEquipmentUnitAmount	4.00	0.00
tblOffRoadEquipment	OffRoadEquipmentUnitAmount	4.00	0.00
tblOffRoadEquipment	UsageHours	8.00	10.00
tblOffRoadEquipment	UsageHours	8.00	10.00
tblOffRoadEquipment	UsageHours	8.00	0.00
tblOffRoadEquipment	UsageHours	8.00	0.00
tblOffRoadEquipment	UsageHours	8.00	0.00
tblOffRoadEquipment	UsageHours	8.00	0.00
tblTripsAndVMT	HaulingTripLength	20.00	0.00
tblTripsAndVMT	HaulingTripLength	20.00	0.00
tblTripsAndVMT	HaulingTripLength	20.00	0.00
tblTripsAndVMT	VendorTripLength	7.30	0.00
tblTripsAndVMT	VendorTripLength	7.30	0.00
tblTripsAndVMT	VendorTripLength	7.30	0.00
tblTripsAndVMT	WorkerTripLength	10.80	0.00
tblTripsAndVMT	WorkerTripLength	10.80	0.00
tblTripsAndVMT	WorkerTripLength	10.80	0.00
tblTripsAndVMT	WorkerTripNumber	3.00	0.00
tblTripsAndVMT	WorkerTripNumber	3.00	0.00

tblTripsAndVMT	WorkerTripNumber	20.00	0.00

2.0 Emissions Summary

2.1 Overall Construction

Unmitigated Construction

	ROG	NOx	CO	SO2	Fugitive PM10	Exhaust PM10	PM10 Total	Fugitive PM2.5	Exhaust PM2.5	PM2.5 Total	Bio- CO2	NBio- CO2	Total CO2	CH4	N2O	CO2e
Year	tons/yr										MT/yr					
2018																688.3370
Maximum																**688.3370**

Mitigated Construction

	ROG	NOx	CO	SO2	Fugitive PM10	Exhaust PM10	PM10 Total	Fugitive PM2.5	Exhaust PM2.5	PM2.5 Total	Bio- CO2	NBio- CO2	Total CO2	CH4	N2O	CO2e
Year	tons/yr										MT/yr					
2018																688.3362
Maximum																**688.3362**

Permanente Quarry 2018-2019 - Santa Clara County, Annual

	ROG	NOx	CO	SO2	Fugitive PM10	Exhaust PM10	PM10 Total	Fugitive PM2.5	Exhaust PM2.5	PM2.5 Total	Bio- CO2	NBio-CO2	Total CO2	CH4	N20	CO2e
Percent Reduction	**0.00**	**0.00**	**0.00**	**0.00**	**0.00**	**0.00**	**0.00**	**0.00**	**0.00**	**0.00**	**0.00**	**0.00**	**0.00**	**0.00**	**0.00**	**0.00**

Quarter	Start Date	End Date	Maximum Unmitigated ROG + NOX (tons/quarter)	Maximum Mitigated ROG + NOX (tons/quarter)
		Highest		

2.2 Overall Operational

Unmitigated Operational

	ROG	NOx	CO	SO2	Fugitive PM10	Exhaust PM10	PM10 Total	Fugitive PM2.5	Exhaust PM2.5	PM2.5 Total	Bio- CO2	NBio- CO2	Total CO2	CH4	N2O	CO2e
Category	tons/yr										MT/yr					
Area																2.0000e-005
Waste																0.0000
Total																**2.0000e-005**

Mitigated Operational

	ROG	NOx	CO	SO2	Fugitive PM10	Exhaust PM10	PM10 Total	Fugitive PM2.5	Exhaust PM2.5	PM2.5 Total	Bio- CO2	NBio- CO2	Total CO2	CH4	N2O	CO2e
Category	tons/yr										MT/yr					
Area																2.0000e-005
Waste																0.0000
Total																**2.0000e-005**

	ROG	**NOx**	**CO**	**SO2**	**Fugitive PM10**	**Exhaust PM10**	**PM10 Total**	**Fugitive PM2.5**	**Exhaust PM2.5**	**PM2.5 Total**	**Bio- CO2**	**NBio-CO2**	**Total CO2**	**CH4**	**N20**	**CO2e**
Percent Reduction	**0.00**	**0.00**	**0.00**	**0.00**	**0.00**	**0.00**	**0.00**	**0.00**	**0.00**	**0.00**	**0.00**	**0.00**	**0.00**	**0.00**	**0.00**	**0.00**

3.0 Construction Detail

Construction Phase

Phase Number	Phase Name	Phase Type	Start Date	End Date	Num Days Week	Num Days	Phase Description
1	Hydroseeding	Site Preparation	7/1/2018	7/6/2018	5	5	
2	BMP Maintenance	Site Preparation	7/1/2018	7/17/2018	5	12	
3	Quarry Pit Backfilling	Site Preparation	7/1/2018	11/7/2018	5	93	

Acres of Grading (Site Preparation Phase): 0

Acres of Grading (Grading Phase): 0

Acres of Paving: 0

Residential Indoor: 0; Residential Outdoor: 0; Non-Residential Indoor: 0; Non-Residential Outdoor: 0; Striped Parking Area: 0 (Architectural Coating – sqft)

OffRoad Equipment

Phase Name	Offroad Equipment Type	Amount	Usage Hours	Horse Power	Load Factor
Hydroseeding	Off-Highway Trucks	1	10.00	300	0.40
BMP Maintenance	Tractors/Loaders/Backhoes	1	10.00	69	0.37
Quarry Pit Backfilling	Off-Highway Trucks	5	10.00	481	0.38
Quarry Pit Backfilling	Off-Highway Trucks	1	10.00	443	0.48
Quarry Pit Backfilling	Rubber Tired Dozers	1	10.00	350	0.41
Quarry Pit Backfilling	Rubber Tired Loaders	1	10.00	536	0.40
Hydroseeding	Rubber Tired Dozers	0	0.00	247	0.40
BMP Maintenance	Rubber Tired Dozers	0	0.00	247	0.40
Hydroseeding	Tractors/Loaders/Backhoes	0	0.00	97	0.37
Quarry Pit Backfilling	Tractors/Loaders/Backhoes	0	0.00	97	0.37

Trips and VMT

Phase Name	Offroad Equipment Count	Worker Trip Number	Vendor Trip Number	Hauling Trip Number	Worker Trip Length	Vendor Trip Length	Hauling Trip Length	Worker Vehicle Class	Vendor Vehicle Class	Hauling Vehicle Class
Hydroseeding	1	0.00	0.00	0.00	0.00	0.00	0.00	LD_Mix	HDT_Mix	HHDT
BMP Maintenance	1	0.00	0.00	0.00	0.00	0.00	0.00	LD_Mix	HDT_Mix	HHDT
Quarry Pit Backfilling	8	0.00	0.00	0.00	0.00	0.00	0.00	LD_Mix	HDT_Mix	HHDT

3.1 Mitigation Measures Construction

3.2 Hydroseeding - 2018

Unmitigated Construction On-Site

	ROG	NOx	CO	SO2	Fugitive PM10	Exhaust PM10	PM10 Total	Fugitive PM2.5	Exhaust PM2.5	PM2.5 Total	Bio- CO2	NBio- CO2	Total CO2	CH4	N2O	CO2e
Category	tons/yr										MT/yr					
Fugitive Dust																0.0000
Off-Road																2.9841
Total																**2.9841**

3.2 Hydroseeding - 2018

Unmitigated Construction Off-Site

	ROG	NOx	CO	SO2	Fugitive PM10	Exhaust PM10	PM10 Total	Fugitive PM2.5	Exhaust PM2.5	PM2.5 Total	Bio- CO2	NBio- CO2	Total CO2	CH4	N2O	CO2e
Category	tons/yr										MT/yr					
Hauling																0.0000
Vendor																0.0000
Worker																0.0000
Total																**0.0000**

Mitigated Construction On-Site

	ROG	NOx	CO	SO2	Fugitive PM10	Exhaust PM10	PM10 Total	Fugitive PM2.5	Exhaust PM2.5	PM2.5 Total	Bio- CO2	NBio- CO2	Total CO2	CH4	N2O	CO2e
Category	tons/yr										MT/yr					
Fugitive Dust																0.0000
Off-Road																2.9841
Total																**2.9841**

3.2 Hydroseeding - 2018

Mitigated Construction Off-Site

	ROG	NOx	CO	SO2	Fugitive PM10	Exhaust PM10	PM10 Total	Fugitive PM2.5	Exhaust PM2.5	PM2.5 Total	Bio- CO2	NBio- CO2	Total CO2	CH4	N2O	CO2e
Category	tons/yr										MT/yr					
Hauling																0.0000
Vendor																0.0000
Worker																0.0000
Total																**0.0000**

3.3 BMP Maintenance - 2018

Unmitigated Construction On-Site

	ROG	NOx	CO	SO2	Fugitive PM10	Exhaust PM10	PM10 Total	Fugitive PM2.5	Exhaust PM2.5	PM2.5 Total	Bio- CO2	NBio- CO2	Total CO2	CH4	N2O	CO2e
Category	tons/yr										MT/yr					
Fugitive Dust																0.0000
Off-Road																1.5256
Total																**1.5256**

3.3 BMP Maintenance - 2018

Unmitigated Construction Off-Site

	ROG	NOx	CO	SO2	Fugitive PM10	Exhaust PM10	PM10 Total	Fugitive PM2.5	Exhaust PM2.5	PM2.5 Total	Bio- CO2	NBio- CO2	Total CO2	CH4	N2O	CO2e
Category	tons/yr										MT/yr					
Hauling																0.0000
Vendor																0.0000
Worker																0.0000
Total																**0.0000**

Mitigated Construction On-Site

	ROG	NOx	CO	SO2	Fugitive PM10	Exhaust PM10	PM10 Total	Fugitive PM2.5	Exhaust PM2.5	PM2.5 Total	Bio- CO2	NBio- CO2	Total CO2	CH4	N2O	CO2e
Category	tons/yr										MT/yr					
Fugitive Dust																0.0000
Off-Road																1.5256
Total																**1.5256**

3.3 BMP Maintenance - 2018

Mitigated Construction Off-Site

	ROG	NOx	CO	SO2	Fugitive PM10	Exhaust PM10	PM10 Total	Fugitive PM2.5	Exhaust PM2.5	PM2.5 Total	Bio- CO2	NBio- CO2	Total CO2	CH4	N2O	CO2e
Category	tons/yr										MT/yr					
Hauling																0.0000
Vendor																0.0000
Worker																0.0000
Total																**0.0000**

3.4 Quarry Pit Backfilling - 2018

Unmitigated Construction On-Site

	ROG	NOx	CO	SO2	Fugitive PM10	Exhaust PM10	PM10 Total	Fugitive PM2.5	Exhaust PM2.5	PM2.5 Total	Bio- CO2	NBio- CO2	Total CO2	CH4	N2O	CO2e
Category	tons/yr										MT/yr					
Fugitive Dust																0.0000
Off-Road																683.8273
Total																**683.8273**

3.4 Quarry Pit Backfilling - 2018

Unmitigated Construction Off-Site

	ROG	NOx	CO	SO2	Fugitive PM10	Exhaust PM10	PM10 Total	Fugitive PM2.5	Exhaust PM2.5	PM2.5 Total	Bio- CO2	NBio- CO2	Total CO2	CH4	N2O	CO2e
Category	tons/yr										MT/yr					
Hauling																0.0000
Vendor																0.0000
Worker																0.0000
Total																**0.0000**

Mitigated Construction On-Site

	ROG	NOx	CO	SO2	Fugitive PM10	Exhaust PM10	PM10 Total	Fugitive PM2.5	Exhaust PM2.5	PM2.5 Total	Bio- CO2	NBio- CO2	Total CO2	CH4	N2O	CO2e
Category	tons/yr										MT/yr					
Fugitive Dust																0.0000
Off-Road																683.8265
Total																**683.8265**

3.4 Quarry Pit Backfilling - 2018

Mitigated Construction Off-Site

	ROG	NOx	CO	SO2	Fugitive PM10	Exhaust PM10	PM10 Total	Fugitive PM2.5	Exhaust PM2.5	PM2.5 Total	Bio- CO2	NBio- CO2	Total CO2	CH4	N2O	CO2e
Category	tons/yr										MT/yr					
Hauling																0.0000
Vendor																0.0000
Worker																0.0000
Total																**0.0000**

4.0 Operational Detail - Mobile

4.1 Mitigation Measures Mobile

4.2 Trip Summary Information

	Average Daily Trip Rate			Unmitigated	Mitigated
Land Use	Weekday	Saturday	Sunday	Annual VMT	Annual VMT
Total					

4.3 Trip Type Information

	Miles			Trip %			Trip Purpose %		
Land Use	H-W or C-W	H-S or C-C	H-O or C-NW	H-W or C-W	H-S or C-C	H-O or C-NW	Primary	Diverted	Pass-by

4.4 Fleet Mix

Land Use	LDA	LDT1	LDT2	MDV	LHD1	LHD2	MHD	HHD	OBUS	UBUS	MCY	SBUS	MH
	0.596719	0.040200	0.188056	0.111125	0.016796	0.004948	0.012194	0.019466	0.002007	0.001626	0.005410	0.000612	0.000841

5.0 Energy Detail

Historical Energy Use: N

5.1 Mitigation Measures Energy

6.0 Area Detail

6.1 Mitigation Measures Area

	ROG	NOx	CO	SO2	Fugitive PM10	Exhaust PM10	PM10 Total	Fugitive PM2.5	Exhaust PM2.5	PM2.5 Total	Bio- CO2	NBio- CO2	Total CO2	CH4	N2O	CO2e
Category	tons/yr										MT/yr					
Mitigated																2.0000e-005
Unmitigated																2.0000e-005

6.2 Area by SubCategory

Unmitigated

	ROG	NOx	CO	SO2	Fugitive PM10	Exhaust PM10	PM10 Total	Fugitive PM2.5	Exhaust PM2.5	PM2.5 Total	Bio- CO2	NBio- CO2	Total CO2	CH4	N2O	CO2e
SubCategory	tons/yr										MT/yr					
Architectural Coating																0.0000
Consumer Products																0.0000
Landscaping																2.0000e-005
Total																**2.0000e-005**

Mitigated

	ROG	NOx	CO	SO2	Fugitive PM10	Exhaust PM10	PM10 Total	Fugitive PM2.5	Exhaust PM2.5	PM2.5 Total	Bio- CO2	NBio- CO2	Total CO2	CH4	N2O	CO2e
SubCategory	tons/yr										MT/yr					
Architectural Coating																0.0000
Consumer Products																0.0000
Landscaping																2.0000e-005
Total																**2.0000e-005**

7.0 Water Detail

7.1 Mitigation Measures Water

8.0 Waste Detail

8.1 Mitigation Measures Waste

Category/Year

	Total CO2	CH4	N2O	CO2e
	MT/yr			
Mitigated				0.0000
Unmitigated				0.0000

8.2 Waste by Land Use

Unmitigated

	Waste Disposed	Total CO2	CH4	N2O	CO2e
Land Use	tons	MT/yr			
	0				0.0000
Total					**0.0000**

Mitigated

	Waste Disposed	Total CO2	CH4	N2O	CO2e
Land Use	tons	MT/yr			
	0				0.0000
Total					**0.0000**

9.0 Operational Offroad

Equipment Type	Number	Hours/Day	Days/Year	Horse Power	Load Factor	Fuel Type

10.0 Stationary Equipment

Fire Pumps and Emergency Generators

Equipment Type	Number	Hours/Day	Hours/Year	Horse Power	Load Factor	Fuel Type

Boilers

Equipment Type	Number	Heat Input/Day	Heat Input/Year	Boiler Rating	Fuel Type

User Defined Equipment

Equipment Type	Number

11.0 Vegetation

APPENDIX G:

MAPS OF PAST 24 MONTHS SURFACE MINING AND RECLAMATION ACTIVITY, FUTURE 24 MONTHS ESTIMATED ACTIVITY AND AERIAL PHOTOGRAPH

MAP OF PAST 24 MONTHS SURFACE MINING AND RECLAMATION ACTIVITY

June 2019 Topo

Active Mining and Stockpile Area

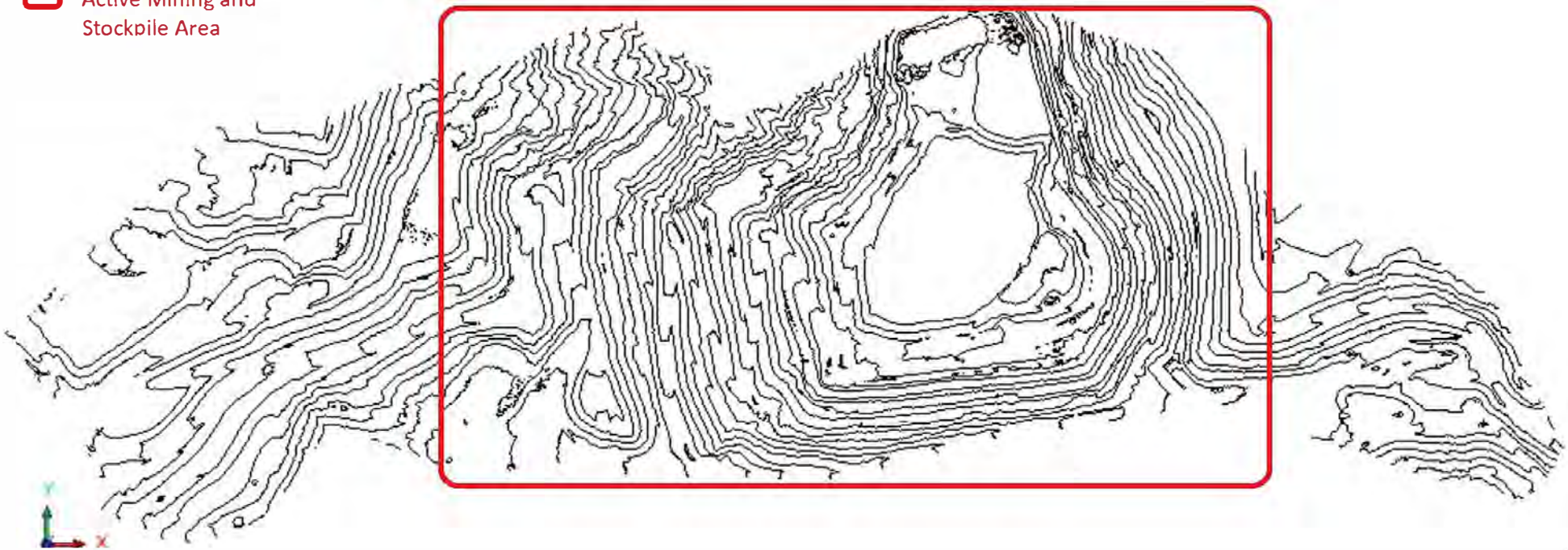

Quarry in 2 years

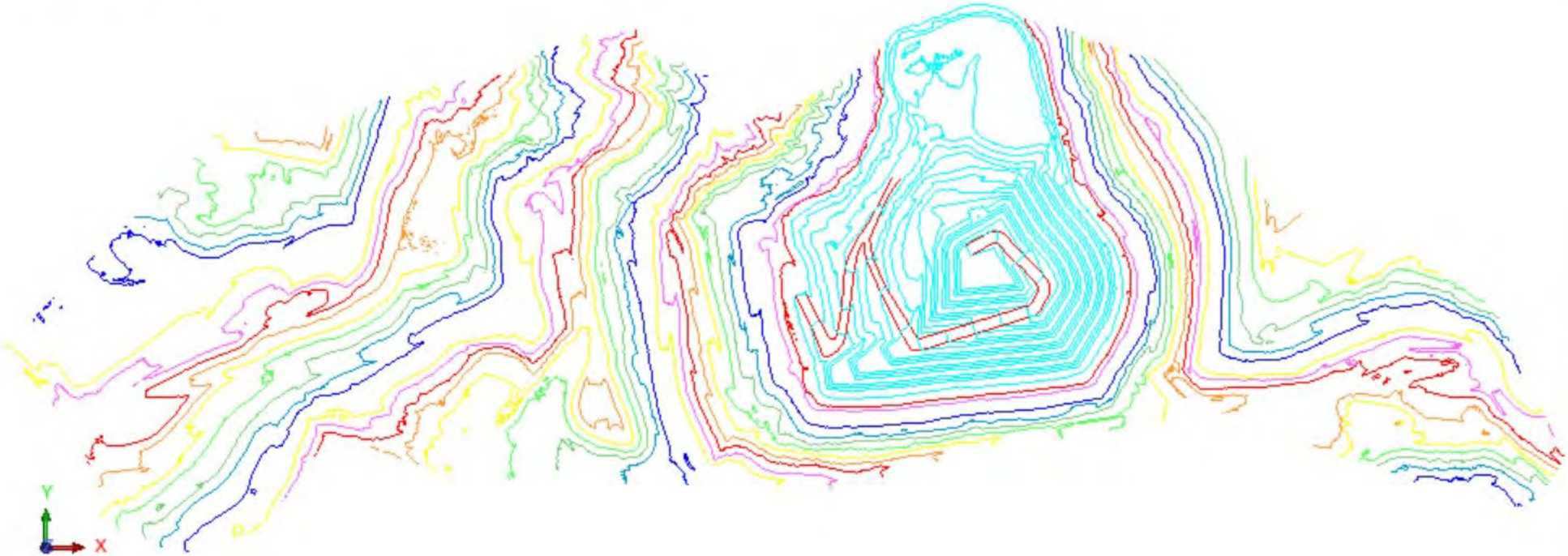

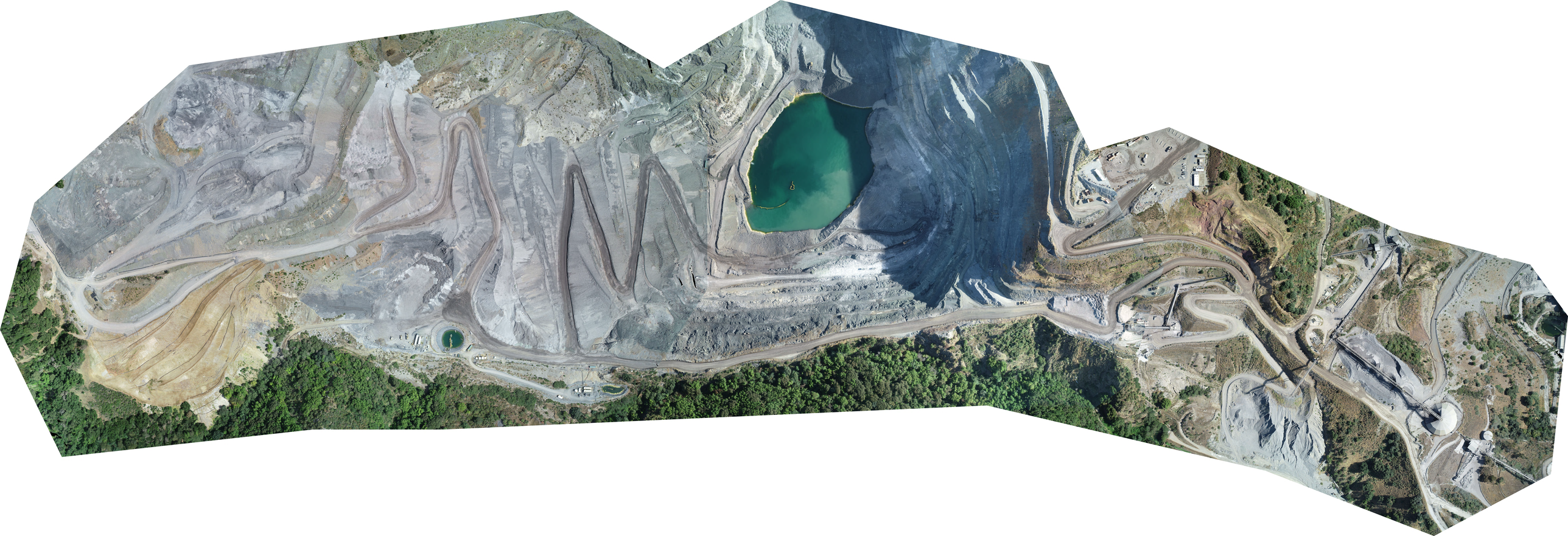

APPENDIX H:

IMPROVED RECLAMATION PLAN BOUNDARY DEMARCATION MEMO

Lehigh Southwest Cement Company
24001 Stevens Creek Boulevard
Cupertino, California 95014
(408) 996-4000

Memo

To:	Tressa Jackson	**From:**	Manjunath Shivalingappa
Copy:	NA	**Date:**	09-23-2019
Subject:	Improved Reclamation Plan Boundary Demarcation		

In order to maintain compliance with Santa Clara County Final Conditions of Approval number 22, the T-posts that served to demarcate the EMSA, WMSA, and Rock Plant Reclamation Plan Amendment (RPA) Boundaries were repainted with high visibility orange spray paint. This was done to improve the visibility of the demarcation boundary (see Demarcation Maps, Figures 1-3).

Conditions of Approval Requirements

Conditions of Approval (COA) number 22 of the Santa Clara County Final Conditions of Approval specify the measures to be taken to maintain the demarcation of the EMSA, WMSA, and Rock Plant Reclamation Plan Amendment Boundary.

The relevant COA is summarized below:

> **COA 22. Maintain Demarcation of EMSA, Rock Plant, and WMSA RPA Boundaries.** Within 60 days of RPA approval, the RPA limit of disturbed area surrounding the northern and eastern edges of the EMSA, the northern and western edges of the WMSA, and the perimeter of the Rock Plant area shall be clearly demarcated in the field and shall remain in place until final reclamation has been completed. On an annual basis, demarcation shall be modified to encompass the RPA boundaries nearest the areas subject to surface mining and reclamation, as shown on aerials submitted per Condition number 23. Demarcated areas shall be located and marked in the field by a licensed land surveyor or registered civil engineer authorized to practice land surveying. Demarcation shall use orange construction fencing or other brightly colored material acceptable to the Planning Manager.

EMSA, Rock Plant, and WMSA RPA Boundary Demarcation Improvements

On July 24, 2019 Lehigh repainted the existing T-post markers, which demarcated the EMSA, Rock Plant, and WMSA RPA boundaries. The T-posts were painted with high visibility orange paint. The demarcation boundary did not move as quarry activities are not planned in or near those areas and there are no plans in place to go beyond the demarcation line. Additional

markers were not needed in other areas because future quarry activities are not scheduled to be located near other portions of the RPA boundary.

Summary

In order to maintain compliance with COA 22, improvements to the durability and visibility of the RPA Boundary were made by repainting the existing T-posts. All T-posts were observed to be standing in the exact locations as when they were placed.

Per the Final Conditions of Approval, all requirements for maintaining the demarcation of the EMSA, Rock Plant, and WMSA RPA Boundaries have been met.

Pictures of RPA Boundary Demarcation in the Rock Plant.

Pictures of RPA Boundary Demarcation in the EMSA

Pictures of RPA Boundary Demarcation in the WMSA

Figure 1. Location of RPA Boundary Demarcation in the EMSA.

Figure 2. Location of RPA Boundary Demarcation in the WMSA.

Figure 3. Location of RPA Boundary Demarcation in the Rock Plant.

APPENDIX I:

FINANCIAL ASSURANCE COST ESTIMATE

Lehigh Cement Company
24001 Stevens Creek Blvd.
Cupertino, CA 95014
Phone (408) 996-4000
www.lehighcement.com

September 4, 2019

Mr. Rob Salisbury
Department of Planning and Development
Land Development and Engineering
County of Santa Clara
70 West Hedding St.
San Jose, CA 95110

RE: Lehigh-Permanente Quarry, State Mine ID# 91-43-0004
Financial Assurance Cost Estimate

Dear Mr. Salisbury:

Please find enclosed a *Financial Assurance Cost Estimate* (FACE) for the above-referenced facility. The FACE was prepared by Mr. Travis Jokerst of EnviroMine, Inc., in accordance with Condition of Approval #14 of the facility's 2012 Reclamation Plan Amendments.

The FACE is submitted to the Planning Manager for review and approval, and serves as the basis for the amount of financial assurances required of the Mine Operator, account for disturbed and those lands to be disturbed in the following year by the surface mining operations, inflation, and reclamation of lands accomplished in accordance with the approved RPA. Cost estimates use the most up-to-date cost figures for the San Francisco Bay Area and include appropriate costs for all materials to be used, labor rates, and equipment rates used in calculating the FACE. Upon approval of the FACE by the County and review by the State Office of Mine Reclamation (OM), Lehigh will post an acceptable Financial Assurance mechanism with the Department of Planning and Development.

If you have questions or comments, please do not hesitate to contact me at 408-996-4233.

Sincerely,

Tressa Jackson

Tressa Jackson
Area Environmental Manager

Version: 8-31-18

FINANCIAL ASSURANCE COST ESTIMATE

FOR

Permanente Quarry
(Mine Name)

CA Mine ID # 91- 43-0004

Reclmation Plan #/Name Reclamation Plan Amendment for Permanente Quarry/2250-13-66-10P-10EIR (M1)

Prepared by: *(Name & Affiliation)*	This financial assurance cost estimate prepared and submitted pursuant to *(choose one)* :
EnviroMINE, Inc (consultant for Lehigh Hanson) 3511 Camio del Rio South, Suite 403 San Diego, CA 92108 Date: September 4, 2019	☐ A new or amended reclamation plan approved on (Date): ☒ An annual mine inspection performed on (Date): 8/6/2019 ☐ Other: Please Specify:

Most Recent Approved Financial Assurance Cost Estimate

Date: March 11, 2019

Amount: $ 52,916,214

Amount of existing Financial Assurance Mechansim(s)

Date: Various

Amount: $ 54,657,484

I. SUPPORTING DOCUMENTS

This estimate represents the cost of conducting and completing reclamation in accordance with the Surface Mining and Reclamation Act (SMARA) and the following supporting documents:

Reclamation Plan Approval Date and Number

June 26, 2012, 2250-13-66-10P-10EIR (M1) (County of Santa Clara)

Permits and/or Environmental Documents Approved as, or Conditional upon, the Reclamation Plan

Site is vested.

Other Agency Financial Assurances Securing Reclamation of Disturbed Lands

N/A

Wage Rates used in Cost Estimate* *(cost estimates are required to use current 'General prevailing wage determinations made by the director of industrial relations' where applicable (http://www.dir.ca.gov/OPRL/PWD/index.htm) with employer labor surcharge added, or greater)*

Department of Industrial Relations, Prevailing Wage Determinations (2019)

Equipment Rates used in Cost Estimates* *(use current 'Labor Surchage and Equipment Rental Rates (Cost of Equipment Ownership)' equipment rates published by Caltrans (http://www.dot.ca.gov/hq/construc/equipmnt.html) or other publicly available and verifiable local rates)*

Caltrans, Labor Surcharge & Equipment Rental Rates (4/1/19-3/31/20)

Equipment Production Rates used in Cost Estimate *(Use of current Caterpillar Performance Handbook or equivalent published production rates is required)*

Caterpillar Performance Handbook, 37th Edition
RSMeans Site Work & Landscaping Cost Data, Kingston, MA, 2018

**Many mine sites are remote projects that require hours of travel (to and from) and sometimes require additional time to prepare for even the simplest of tasks. In accordance with labor Code Sections 1773.1 and 1773.9, contractors are required to make travel and/or subsistence (per diem) payments to each worker to execute the work. These arrangements can be quite variable and site specific.*

Attachments:

1. Bid from Aggregate Machinery Specialist for Primary Station and conveyor system
2. Backfill Volume Estimate Memo from Stantec Consulting Services, Inc.
3. Bulldozer production rates
4. Scraper production rates for capping site with non-limestone material
5. Seed quote from Pacific Coast Seed for PCRA
6. Seed quote from Pacific Coast Seed for approximately 500 acres
7. Bid from Freedlun Hydroseeding, Inc. for applying hydroseed

(add additional pages as needed)

II. Description of Current Site Conditions

(i.e., disturbed acres, slope conditions, excavation depths, topsoil and overburden stockpiles, equipment and facilities, reclamation in progress, erosion control status, required corrective actions, etc.)

Current operations at the site include a quarry (Main Pit/North Quarry) that consists of a cut-face with a series of benches and multiple material storage areas – East Material Storage Area (EMSA) and West Material Storage Area (WMSA). Reclamation at the quarry is conducted on an annual basis for areas at final grade and not subject to further disturbance. In 2012, reclamation work commenced in the Permanente Creek Reclamation Area (PCRA), the installation of BMP's and hydroseeding was completed in Subareas 4, 5 and 6. Current grading activities are taking place in Phase 1A of the approved mine plan. The majority of the 639.6-acre RPA footprint is found in a fully disturbed condition with little evidence of vegetative cover. An exception to this includes areas where reclamation has begun or areas that have naturally revegetated. In total, approximately 546 acres are currently disturbed at the site. There is also a rock plant, cement plant, and various pieces of mobile equipment on the site.

III. Description of Anticipated Site Conditions (12 months from date of estimate)

(i.e., increase of disturbed acres, increase of depth, increases in amount of equipment and/or facilities, required corrective actions, etc.)

It is expected that mining will continue to progress in Phase 1 of the Main Pit during the next 12 months.

IV. Description/Justification of Cost Increase/Decrease

The total cost has increased as a result of pipeline removal costs that were added to this year's estimate and increased labor, equipment, and revegetation costs.

(add additional pages as needed)

V. PLANT STRUCTURES AND EQUIPMENT REMOVAL *(use multiple sheets as needed)*

Provide documentation showing that rates, prices, and wages are available locally to all persons, including the lead agency and/or the Department.

Current Site Condition:

At this time, plant removal would involve demolishing and transporting the Rock Plant, including conveyors, crushers, screens, wash plants, scales, storage tanks, and miscellaneous structures to an offsite location. This also includes the removal of the overland conveyor that extends from the Main Pit to the Cement Plant (approx. 8,900 feet). In addition to demolition and removal of these structures, all foundations must be demolished and removed, and compacted surfaces must be ripped to prepare the site for revegetation.

Reclamation Plan Performance Standard (End Use):

At the conclusion of mining operations, all equipment, structures, and other infrastructure improvements will need to be removed from the site.

Describe tasks:

This estimate assumes the use of a crane, excavators with steel shear and grapple attachments, front-end loaders, trucks with low bed trailers, and dump trucks for dismantling and removing the plant equipment and structures. The steel structures will be cut into manageable pieces with an excavator mounted with a steel shear, with pieces placed on an over-the-road truck for removal to a scrap yard for recycling. It is estimated that there is approximately 1,000 tons of recyclable steel onsite. Current market value of scrap steel is $160 per ton (Alco Metals, San Jose). Other non-recyclable materials will be put into roll-off dumpsters (CDR Dumpster Rental) and hauled off site. Some structures will be dismantled by shearing, cutting using a cutting torch, or simply unbolting the equipment from the support structures prior to demolition. Also, there are currently 30 pieces of mobile equipment (loaders, dozers, trucks, etc.) that would need to be loaded and hauled off site to a resale dealer. This estimate assumes two (2) hours per piece of equipment. Once the equipment is removed, it will be necessary to demolish all concrete footings and foundations. Concrete will be broken up using an excavator and a hydraulic hammer and hauled to a recycling yard. This estimate assumes that there is approximately 2,950 cubic yards of concrete to be demolished and removed from the site. Also, approximately 28,110 linear feet of water pipeline will need to be dismantled and removed from the site.

Equipment on site wholly owned by operator?: ☒ YES ☐ NO
(if no, please provide the name/s and contact information for any lien holder)

(add additional pages as needed)

Version: 8-31-18

Processing Plant, Conveyor, & Support Structure Removal

(↑ Describe Reclamation Activity Being Estimated)

V. PLANT STRUCTURES & EQUIPMENT REMOVAL

Methods to be used:

A. Equipment - List equipment to complete identified task. For large reclamation jobs, separate mine areas.

Equipment	Unit of Measure	$/Unit	# of Units	Cost ($)
Grove RT 635 40t Crane	Hours	$86.47	108.0	$9,339
CAT 330 w/ Steel Shear ($161.78+$115.03)	Hours	$276.81	93.0	$25,743
CAT 330 w/ Grapple ($161.78+$16.05)	Hours	$177.83	108.0	$19,206
Semi-truck w/ end dump	Hours	$87.29	84.0	$7,332
Semi-truck w/ 2 axle lowboy trailer ($76.67+$19.86)	Hours	$96.53	118.0	$11,391
CAT 966E Wheel Loader	Hours	$129.80	108.0	$14,018
Welding Truck	Hours	$46.23	120.0	$5,548
Pickup Truck (2)	Hours	$26.15	112.0	$2,929
			Total Equipment Cost for this Task =	$95,505

B. Labor - List all labor categories to complete identified task

Labor Category	$/Hour (prevailing wage)	Labor Surcharge/Hr *(where applicable)* (enter % of wage) 0.0%	# of Hours	Cost ($)
Crane Operator (Operating Engineer, Grp. 3-A, Area 1)	$75.18	$0.00	108.0	$8,119
Excavator Operator (2) (Operating Engineer, Grp. 3, Area 1)	$74.79	$0.00	201.0	$15,033
Dump Truck Driver (Teamster, Grp. 3)	$60.77	$0.00	84.0	$5,105
Lowboy Truck Driver (Teamster, Grp. 4)	$61.12	$0.00	118.0	$7,212
Loader Operator (Operating Engineer, Grp. 3, Area 1)	$74.79	$0.00	108.0	$8,077
Foreman (Operating Engineer, Grp. 2, Area 1)	$76.27	$0.00	140.0	$10,678
Laborer (2) (Laborer, Grp. 3, Area 1)	$54.49	$0.00	112.0	$6,103
Welder (4) (Laborer, Const. Specialist, Area 1)	$55.44	$0.00	225.0	$12,474
			Total Labor Cost for this Task =	$72,801

C. Demolition - List all structures and equipment to be dismantled or demolished and removed from site

Structure/Equipment to be removed	Type of Material	Volume/ Quantity	Unit Cost Basis	Disposal Cost	Cost ($)
Roll-off Trash Containers & Landfill Fees (20 CY)	Mixed	15.00	$592.00	$0.00	$8,880
		0.00	$0.00	$0.00	$0
				Total Materials Cost for this Task =	$8,880

D. Total Direct Cost of Structure and Equipment Removal (Total A+B+C)

Equipment Cost + Labor Cost + Demolition Cost = $177,187

E. Net Salvage Value* (Supported by properly prepared third party estimate, bid, or cost calculation)

Net Salvage Value = $ **160,000.00**

F. Total Cost of Structure and Equipment Removal (Subtract Line D from Line E)

Total Cost of Structure and Equipment Removal = **$17,187**

NOTE: Above **Total Cost** will display $0.00 if net of entered removal costs and salvage value is negative.

*Note: Salvage value may only be used to offset the direct cost of removing the single item for which salvage value is being claimed. Salvage value shall not be used to offset any other demolition, general cleanup, or reclamation costs.

Version: 8-31-18

Concrete Breaking and Pipeline Removal

(↑ Describe Reclamation Activity Being Estimated)

V. PLANT STRUCTURES & EQUIPMENT REMOVAL

Methods to be used:

A. Equipment - List equipment to complete identified task. For large reclamation jobs, separate mine areas.

Equipment	Unit of Measure	$/Unit	# of Units	Cost ($)
CAT 330 Excavator w/ Rock Breaker Attachment ($161.78+$38.84)	Hours	$200.62	92.0	$18,457
CAT 330 Excavator w/ Bucket	Hours	$161.78	58.0	$9,383
CAT 966E Wheel Loader	Hours	$129.80	16.0	$2,077
Haul Truck (10)	Hours	$87.29	268.0	$23,394
Pickup Truck	Hours	$26.15	168.0	$4,393
CAT 966E Wheel Loader (for pipeline removal)	Hours	$129.80	114.0	$14,797
Semi-truck w/ 2 axle lowboy trailer (pipeline removal) ($76.67+$19.86)	Hours	$96.53	48.0	$4,633
			Total Equipment Cost for this Task =	$77,135

B. Labor - List all labor categories to complete identified task

Labor Category	$/Hour (prevailing wage)	Labor Surcharge/Hr *(where applicable)* (enter % of wage) 0.0%	# of Hours	Cost ($)
Excavator Operators (2) (Operating Engineer, Grp. 3, Area 1)	$74.79	$0.00	150.0	$11,219
Loader Operator (Operating Engineer, Grp. 3, Area 1)	$74.79	$0.00	16.0	$1,197
Haul Truck Driver (10) (Teamster, Grp. 3)	$60.77	$0.00	268.0	$16,286
Laborer (2) (Laborer, Grp. 3, Area 1)	$54.49	$0.00	116.0	$6,321
Loader Operator (pipeline removal) (Operat. Engineer, Grp. 3, Area 1)	$74.79	$0.00	114.0	$8,526
Lowboy Truck Driver (for pipeline removal) (Teamster, Grp. 4)	$61.12	$0.00	48.0	$2,934
Laborer (4) (for pipeline removal) (Laborer, Grp. 3, Area 1)	$54.49	$0.00	114.0	$6,212
			Total Labor Cost for this Task =	$52,694

C. Demolition - List all structures and equipment to be dismantled or demolished and removed from site

Structure/Equipment to be removed	Type of Material	Volume/ Quantity	Unit Cost Basis	Disposal Cost	Cost ($)
Recycling Fee	Concrete	175.00	$82.00	$0.00	$14,350
Dump Fee	Pipeline	14.00	$500.00	$0.00	$7,000
				Total Materials Cost for this Task =	$21,350

D. Total Direct Cost of Structure and Equipment Removal (Total A+B+C)

Equipment Cost + Labor Cost + Demolition Cost = $151,179

E. Net Salvage Value* (Supported by properly prepared third party estimate, bid, or cost calculation)

Net Salvage Value = $ **0.00**

F. Total Cost of Structure and Equipment Removal (Subtract Line D from Line E)

Total Cost of Structure and Equipment Removal = **$151,179**

NOTE: Above **Total Cost** will display $0.00 if net of entered removal costs and salvage value is negative.

*Note: Salvage value may only be used to offset the direct cost of removing the single item for which salvage value is being claimed. Salvage value shall not be used to offset any other demolition, general cleanup, or reclamation costs.

Version: 8-31-18

Mobile Equipment Removal

(↑ Describe Reclamation Activity Being Estimated)

V. PLANT STRUCTURES & EQUIPMENT REMOVAL

Methods to be used:

A. Equipment - List equipment to complete identified task. For large reclamation jobs, separate mine areas.

Equipment	Unit of Measure	$/Unit	# of Units	Cost ($)
Semi-Truck w/ 3 axle lowboy to remove the following ($76.67+$24.51):	Hours	$101.18	18.0	$1,821
216 Skid Steer, 226 Skid Steer, 16G Grader,		$0.00	0.0	$0
872GP Grader, Miller 600D Welder, Allmand 695 Lite		$0.00	0.0	$0
Towers, Water Trucks		$0.00	0.0	$0
		$0.00	0.0	$0
Semi-Truck w/ 5 axle lowboy & two pilot cars to remove*:	Hours	$2,787.00	13.0	$36,231
992 Loader, 944k Loader, D10 Dozer, 1050K Dozer, 850k		$0.00	0.0	$0
Dozer, 824 Dozer, 460 Truck		$0.00	0.0	$0

* Based on a lump sum estimate that includes driver.

Total Equipment Cost for this Task = $38,052

B. Labor - List all labor categories to complete identified task

Labor Category	$/Hour (prevailing wage)	Labor Surcharge/Hr *(where applicable)* (enter % of wage) 0.0%	# of Hours	Cost ($)
Semi-truck Driver (Teamster, Grp. 4)	$61.12	$0.00	18.0	$1,100
	$0.00	$0.00	0.0	$0
	$0.00	$0.00	0.0	$0

Total Labor Cost for this Task = $1,100

C. Demolition - List all structures and equipment to be dismantled or demolished and removed from site

Structure/Equipment to be removed	Type of Material	Volume/ Quantity	Unit Cost Basis	Disposal Cost	Cost ($)
		0.00	$0.00	$0.00	$0
		0.00	$0.00	$0.00	$0
		0.00	$0.00	$0.00	$0
		0.00	$0.00	$0.00	$0

Total Materials Cost for this Task = $0

D. Total Direct Cost of Structure and Equipment Removal (Total A+B+C)

Equipment Cost + Labor Cost + Demolition Cost = $39,152

E. Net Salvage Value* (Supported by properly prepared third party estimate, bid, or cost calculation)

Net Salvage Value = $ **0.00**

F. Total Cost of Structure and Equipment Removal (Subtract Line D from Line E)

Total Cost of Structure and Equipment Removal = **$39,152**

NOTE: Above **Total Cost** will display $0.00 if net of entered removal costs and salvage value is negative.

*Note: Salvage value may only be used to offset the direct cost of removing the single item for which salvage value is being claimed. Salvage value shall not be used to offset any other demolition, general cleanup, or reclamation costs.

VI. PRIMARY RECLAMATION ACTIVITY : Backfilling Main Pit

Use multiple sheets as necessary to estimate the cost of each activity required. Provide documentation showing that rates, prices, and wages are available locally to the lead agency and/or the Department if necessary.

Current Site Conditions:

This estimate's restoration scenario incorporates backfilling of the Main Pit to buttress past instabilities. To accomplish this, the West Materials Storage Area (WMSA) will be used as the primary source of backfill material, since mining byproducts (unused mined material) will not be available. A stockpile located west of the Rock Plant, that contains approximately 300,000 tons of crushed rock, will also be relocated to the main pit. Material used for backfilling is to be amended with organic matter (approximately 63,000 tons). Measures to protect surface water quality during reclamation activities consist of isolating runoff from limestone materials in the Main Pit backfill, WMSA, and EMSA. This will be accomplished during reclamation by capping reclaimed areas with a 1-foot thick layer of run-of-mine non-limestone rock (i.e., greywacke, chert, and greenstone).

Reclamation Plan Performance Standard (End Use):

Reclamation requirements for the site include the development of a benched quarry face with an overall slope gradient of 1H:1V (horizontal: vertical), while the overburden fill slopes will be reclaimed at a maximum overall slope inclination between 2.5H:1V to 2.6H:1V. The proposed end use for the quarry after reclamation is complete is open space.

Describe tasks, methods, equipment, etc:

Decompaction, cut, fill, haul, slope reduction, compaction, grading, topsoil placement, drainage work, soil amendment, special requirements, etc. Separate sheets may be used for each task if necessary.

A conveyor system will be utilized to transport backfill material from the WMSA to the Main Pit and place material directly into the pit. Oversized material will be reduced by a jaw crusher to six (6) inch minus prior to loading onto the conveyor. This estimate assumes the purchase of a crusher, conveyor, and stacking system (See Attachment 1 for cost estimate). Operation and maintenance costs to run the system have been included in the tables below. Stockpiled material near the Rock Plant will be relocated to the Main Pit by using haul trucks that are loaded with a front-end loader. Organic material would be delivered to the WMSA from an offsite source and added to backfill material with a loader. Distribution of non-limestone material for capping will utilize a variety of equipment. A combination of dozers, scrapers, loaders, and haul trucks will be utilized to distribute the non-limestone capping material.

Provide Quantities:

Overburden and topsoil, cut and fill, import or export (cubic yards), area (acres), haul distance (feet), equipment production rates (cubic yards/hour, or as applicable), etc.

After analyzing the existing and proposed topography, the total volume required for backfilling the Main Pit is estimated at 29,845,648 cubic yards (See Attachment 2 for volume estimate memo from Stantec Consulting Services, Inc.). This volume accounts for material that was removed from the pit during the past year (846,773 cubic yards). During the past year, most mining activity occurred in the southern portion of the Main Pit. The conveyor system would extend approximately 10,000 feet to the WMSA. Backfilling of the Main Pit will also include grading of approximately 6,700,000 cubic yards of non-limestone material that has been identified as the “Main Slide.” Materials originating from the Main Slide will be removed using a D10 bull dozer (See Attachment 3 for production rates). This estimate assumes production rates of 1,027.5 cubic yards per hour for the D11 bulldozer and 1,380 cubic yards per hour for the conveyor system. To optimize production from the dozers, the conveyor system will be relocated as grading progresses; average push distances will be kept at approximately 300 feet. For stockpiled material near the Rock Plant, a Cat 992 front-end-loader will load the material into haul trucks while a water truck and grader will be utilized to maintain the road network and suppress dust. It is estimated that there is 200,000 cubic yards of stockpiled material (using 1.5 tons per CY). Organic material would be delivered by trucks to the WMSA, near the hopper for the portable conveyor system, and a 938 loader will feed the material into the hopper. Approximately 710,000 cubic yards of non-limestone material will be used for capping reclaimed areas of the site. Caterpillar production rates for a 651 Scraper are provided in Attachment 4.

Version: 8-31-18

Backfilling Main Pit

(↑ Describe Reclamation Activity Being Estimated)

VI. PRIMARY RECLAMATION ACTIVITY

Acres:		Overburden (cy):	29,845,648
Haul Distance (ft):	300	Topsoil (cy):	
Production Rate (cy/hr):	1,380 conveyor	*(NOTE: no automatic calculations occur to data in this upper table)*	

Methods to be used:

A. Equipment - List equipment to complete identified task. For large reclamation jobs, separate mine areas.

Equipment	Unit of Measure	$/Unit	# of Units	Cost ($)
Grove RT 525 Crane (for conveyor install)	Hours	$67.31	200.0	$13,462
CAT 938G Loader (for conveyor install)	Hours	$93.49	200.0	$18,698
CAT 315L Excavator (for conveyor install)	Hours	$59.46	200.0	$11,892
Pickup Truck (2) (for conveyor install)	Hours	$26.15	400.0	$10,460
42" Conveyor System Over 10,000' (lump sum)	Hours	$10,370,930.00	1.0	$10,370,930
CAT D10N Dozers (3)	Hours	$302.75	64881.0	$19,642,723
CAT D11N Dozer	Hours	$474.05	7262.0	$3,442,551
Water Truck	Hours	$46.23	7262.0	$335,722
Conveyor Operation/Maintenance	Hours	$47.26	21627.0	$1,022,092
Electricity	Hours	$28.41	21627.0	$614,423
CAT 325L Excavator (for relocating conveyor)	Hours	$108.12	80.0	$8,650
CAT 988 Loader (for relocating conveyor)	Hours	$163.03	80.0	$13,042
			Total Equipment Cost for this Task =	$35,504,645

B. Labor - List all labor categories to complete identified tasks

Labor Category	$/Hour (prevailing wage)	Labor Surcharge/Hr *(where applicable)* (enter % of wage) 0.0%	# of Hours	Cost ($)
Crane Operator (Operating Engineer, Grp. 3-A, Area 1)	$75.18	$0.00	200.0	$15,036
Loader Operators (2) (Operating Engineer, Grp. 3, Area 1)	$74.79	$0.00	280.0	$20,941
Excavator Operators (2) (Operating Engineer, Grp. 3, Area 1)	$74.79	$0.00	280.0	$20,941
Foreman (Operating Engineer, Grp. 2, Area 1)	$76.27	$0.00	200.0	$15,254
Laborers (2) (Laborer, Grp. 3, Area 1)	$54.49	$0.00	400.0	$21,796
Dozer Operators (4) (Operating Engineer, Grp. 3, Area 1)	$74.79	$0.00	72143.0	$5,395,575
Water Truck Driver (Teamster, Grp. 2)	$60.47	$0.00	7262.0	$439,133
			Total Labor Cost for this Task =	$5,928,677

C. Materials - List all materials required to complete identified task

Item	$/Unit	Sales tax (enter local rate in %) 0.0%	Quantity	Cost ($)
	$0.00	$0.00	0.0	$0
			Total Materials Cost for this Task =	$0

D. Total Direct Cost for this task

Equipment Cost + Labor Cost + Materials Cost = $41,433,322

Version: 8-31-18

Stockpile Relocation, Organic Material, Capping

(↑ Describe Reclamation Activity Being Estimated)

VI. PRIMARY RECLAMATION ACTIVITY

Acres:	440	Overburden (cy):	910,000
Haul Distance (ft):		Topsoil (cy):	
Production Rate (cy/hr):	454 (scraper), 520 (truck)	*(NOTE: no automatic calculations occur to data in this upper table)*	

Methods to be used:

A. Equipment - List equipment to complete identified task. For large reclamation jobs, separate mine areas.

Equipment	Unit of Measure	$/Unit	# of Units	Cost ($)
CAT 992C Loader (for stockpile relocation)	Hours	$456.21	195.0	$88,961
CAT 777D Haul Trucks (11) (for stockpile reloc., capping)	Hours	$278.19	2254.0	$627,040
CAT 12H Blade (for stockpile relocation)	Hours	$88.42	98.0	$8,665
CAT 938F Loader (for organic material mixing)	Hours	$82.80	600.0	$49,680
CAT 992B Loader (2) (for non-limestone capping)	Hours	$291.93	314.0	$91,666
CAT 651B Scraper (4) (for capping)	Hours	$269.32	608.0	$163,747
CAT D10N Dozer (2) (for capping)	Hours	$302.75	238.0	$72,055
Water Truck (for stockpile relocation & capping)	Hours	$46.23	492.0	$22,745
			Total Equipment Cost for this Task =	$1,124,559

B. Labor - List all labor categories to complete identified tasks

Labor Category	$/Hour (prevailing wage)	Labor Surcharge/Hr *(where applicable)* (enter % of wage) 0.0%	# of Hours	Cost ($)
Loader Operators (4) (Operating Engineer, Grp. 3, Area 1)	$74.79	$0.00	1109.0	$82,942
Haul Truck Drivers (11) (Teamster, Grp. 4)	$61.12	$0.00	2254.0	$137,764
Blade Operator (Operating Engineer, Grp. 3, Area 1)	$74.79	$0.00	98.0	$7,329
Scraper Operators (4) (Operating Engineer, Grp. 3, Area 1)	$74.79	$0.00	608.0	$45,472
Dozer Operators (2) (Operating Engineer, Grp. 3, Area 1)	$74.79	$0.00	238.0	$17,800
Water Truck Driver (Teamster, Grp. 2)	$60.47	$0.00	492.0	$29,751
			Total Labor Cost for this Task =	$321,060

C. Materials - List all materials required to complete identified task

Item	$/Unit	Sales tax (enter local rate in %) 0.0%	Quantity	Cost ($)
Organic Material * (tons)	$35.00	$0.00	63,000.0	$2,205,000
* Cost from material supplier in Gilroy, CA, plus shipping, CPI.	$0.00	$0.00	0.0	$0
			Total Materials Cost for this Task =	$2,205,000

D. Total Direct Cost for this task

Equipment Cost + Labor Cost + Materials Cost = $3,650,618

Version: 8-31-18

Ripping, Finish Grading, BMP Installation

(↑ Describe Reclamation Activity Being Estimated)

VI. PRIMARY RECLAMATION ACTIVITY

Acres:	498	Overburden (cy):	
Haul Distance (ft):		Topsoil (cy):	
Production Rate (cy/hr):	1 acre/hour	*(NOTE: no automatic calculations occur to data in this upper table)*	

Methods to be used:

A. Equipment - List equipment to complete identified task. For large reclamation jobs, separate mine areas.

Equipment	Unit of Measure	$/Unit	# of Units	Cost ($)
Grading with a CAT D8R Dozer	Hours	$182.46	498.0	$90,865
Ripping with a CAT D8R Dozer ($182.46+$17.04)	Hours	$199.50	7.0	$1,397
Desiltation Basin Installation (Lump Sum est. plus CPI)	Basin	$23,360.00	3.0	$70,080
		$0.00	0.0	$0
		$0.00	0.0	$0
		$0.00	0.0	$0
			Total Equipment Cost for this Task =	$162,342

B. Labor - List all labor categories to complete identified tasks

Labor Category	$/Hour (prevailing wage)	Labor Surcharge/Hr *(where applicable)* (enter % of wage) 0.0%	# of Hours	Cost ($)
Dozer Operator (2) (Operating Engineer, Grp. 3, Area 1)	$74.79	$0.00	505.0	$37,769
	$0.00	$0.00	0.0	$0
	$0.00	$0.00	0.0	$0
	$0.00	$0.00	0.0	$0
	$0.00	$0.00	0.0	$0
	$0.00	$0.00	0.0	$0
			Total Labor Cost for this Task =	$37,769

C. Materials - List all materials required to complete identified task

Item	$/Unit	Sales tax (enter local rate in %) 0.0%	Quantity	Cost ($)
	$0.00	$0.00	0.0	$0
	$0.00	$0.00	0.0	$0
	$0.00	$0.00	0.0	$0
	$0.00	$0.00	0.0	$0
	$0.00	$0.00	0.0	$0
			Total Materials Cost for this Task =	$0

D. Total Direct Cost for this task

Equipment Cost + Labor Cost + Materials Cost = $200,111

VI. PRIMARY RECLAMATION ACTIVITY Permanente Creek Reclamation Area

Use multiple sheets as necessary to estimate the cost of each activity required. Provide documentation showing that rates, prices, and wages are available locally to the lead agency and/or the Department if necessary.

Current Site Conditions:

This section describes the reclamation costs of historic mining disturbance adjacent to Permanente Creek, described as the Permanente Creek Reclamation Area ("PCRA"). The PCRA is divided into seven different subareas (numbered one through seven) with customized reclamation treatments for each subarea. In 2012, after approval of the RPA, reclamation work commenced in Subareas 4, 5 and 6 and was completed in late October. Work completed included installation of BMPs as well as hydroseeding of disturbed areas. In total, approximately nine (9) acres in the PCRA was reclaimed in 2012. In 2016, the application for permitting the restoration work with ACOE and CDFW was submitted and is in process.

Reclamation Plan Performance Standard (End Use):

Removing a concrete half culvert located in the proposed restored stream channel is one aspect of the Permanente Creek Restoration. The concrete half culvert is located just downstream from Pond 13 and covers a length of approximately 375 feet. The reclamation plan also calls for restoration of about 2,500 linear feet of Permanente Creek. Material from historic mining has collected in the creek channel. The reclamation plan calls for removal of this material and creation of a reconfigured creek channel that is roughly 50 feet wide with a 10-foot bottom and 3:1 side slopes. A number of limestone boulders have found their way into Permanente Creek as a result of historic mining operations. These boulders range in size from approximately 10" to 3' in diameter. Once removed from the creek, boulders will be loaded onto off-road haul trucks and hauled to the North Quarry for final placement. After grading work has been completed and prior to revegetating the site temporary and permanent BMPs will be installed to manage stormwater runoff. Lastly, slopes located in Subareas 2 and 3 of the PCRA are comprised of loose unconsolidated fill material. In an effort to reduce erosion from these slopes and to provide more favorable surfaces for seed propagation, the slopes will be compacted.

Describe tasks, methods, equipment, etc:

Decompaction, cut, fill, haul, slope reduction, compaction, grading, topsoil placement, drainage work, soil amendment, special requirements, etc. Separate sheets may be used for each task if necessary.

According to the CAT Handbook, an H120c hydraulic hammer attached to a 315L excavator can demolish approximately 230 cubic yards of reinforced concrete within 8 hours. Once the concrete culvert has been broken into pieces 2-feet in diameter or smaller, the excavator will be used to load the material into haul trucks. Material will be removed from the creek with an excavator, loader, and articulated haul trucks. Small boulders will be removed using hand labor, while larger boulders will be removed with an excavator and/or loader. Construction laborers will install straw waddles and silt fencing to manage stormwater runoff. Slopes located within Subareas 2 and 3 will be compacted with a D8 dozer, towing a sheep's foot, that is moved up and down the slopes by a winch.

Provide Quantities:

Overburden and topsoil, cut and fill, import or export (cubic yards), area (acres), haul distance (feet), equipment production rates (cubic yards/hour, or as applicable), etc.

It is estimated that approximately 130 cubic yards of concrete will need to be demolished and removed to complete removing the concrete half culvert. There is an estimated 17,500 cubic yards of material that will be removed from the channel to create the reconfigured channel. This estimate also assumes that 200 boulders are located within the inundation limits of Permanente Creek.

(add additional pages as needed)

Version: 8-31-18

PCRA Culvert/Boulder Removal, Grading, BMPs

(↑ Describe Reclamation Activity Being Estimated)

VI. PRIMARY RECLAMATION ACTIVITY

Acres:		Overburden (cy):	17,500 (in PC Channel)
Haul Distance (ft):		Topsoil (cy):	
Production Rate (cy/hr):		*(NOTE: no automatic calculations occur to data in this upper table)*	

Methods to be used:

A. Equipment - List equipment to complete identified task. For large reclamation jobs, separate mine areas.

Equipment	Unit of Measure	$/Unit	# of Units	Cost ($)
315L Excavator w/ Rock Breaker Attach. ($59.46+$23.52)	Hours	$82.98	6.0	$498
315L Excavator w/ bucket (culvert removal)	Hours	$59.46	2.0	$119
Haul Truck (4) (culvert removal)	Hours	$87.29	12.0	$1,047
CAT 330 Excavator (channel restoration/boulder removal)	Hours	$148.94	174.0	$25,916
CAT 966F Loader (channel restoration/boulder removal)	Hours	$132.72	148.0	$19,643
CAT 740 Articulated Haul Truck (channel/boulder removal)	Hours	$123.65	154.0	$19,042
Desiltation Basin Installation (Lump Sum est. plus CPI)	Basin	$23,360.00	2.0	$46,720
CAT D8R Dozer w/ Winch (for slope treatment)	Hours	$182.46	16.0	$2,919
Sheep's Foot Attachment (for slope treatment)	Hours	$14.41	16.0	$231
Pick Up Truck	Hours	$26.15	40.0	$1,046
			Total Equipment Cost for this Task =	$117,180

B. Labor - List all labor categories to complete identified tasks

Labor Category	$/Hour (prevailing wage)	Labor Surcharge/Hr *(where applicable)* (enter % of wage) 0.0%	# of Hours	Cost ($)
Excavator Operators (4) (Operating Engineer, Grp. 3, Area 1)	$74.79	$0.00	182.0	$13,612
Haul Truck Drivers (4) (Teamster, Grp. 4)	$61.12	$0.00	12.0	$733
Loader Operators (2) (Operating Engineer, Grp. 3, Area 1)	$74.79	$0.00	148.0	$11,069
Articulated Haul Truck Drivers (3) (Teamster, Grp. 4)	$61.12	$0.00	154.0	$9,412
Dozer Operator (Operating Engineer, Grp. 3, Area 1)	$74.79	$0.00	16.0	$1,197
Foreman(Operating Engineer, Grp. 2, Area 1)	$76.27	$0.00	8.0	$610
Laborers (7) (Laborer, Grp. 3, Area 1)	$54.49	$0.00	284.0	$15,475
			Total Labor Cost for this Task =	$52,109

C. Materials - List all materials required to complete identified task

Item	$/Unit	Sales tax (enter local rate in %) 0.0%	Quantity	Cost ($)
Concrete Recycling Fee (loads)	$82.00	$0.00	8.0	$656
Straw Waddles	$5.02	$0.00	37,600.0	$188,752
Silt Fencing	$4.46	$0.00	3,450.0	$15,387
	$0.00	$0.00	0.0	$0
	$0.00	$0.00	0.0	$0
			Total Materials Cost for this Task =	$204,795

D. Total Direct Cost for this task

Equipment Cost + Labor Cost + Materials Cost = $374,084

VII. REVEGETATION *(use multiple sheets as needed)*

Provide documentation showing that rates, prices, and wages are available locally to the lead agency and/or the Department.

Current Site Condition:

After final grading is completed, disturbed areas of the site will be revegetated with seed mixes and container stock to achieve the goals of the reclamation plan. Previous restoration planting at the Quarry has been used as a guide for revegetation planning. Also, approximately 2 acres were hydroseeded near the Rock Plant during the past year. These revegetated areas will serve as a basis for anticipated revegetation success. Native species common in revegetated areas include California buckwheat, coyote brush, buckbrush and sagebrush. At this time, 13.7 acres of hydroseeding would be necessary within the PCRA and 502 acres of hydroseeding would be required on the remaining areas of the site. An additional 1.5 acres of the PCRA and 28 of the remaining reclamation area will require hand planting of container stock.

Reclamation Plan Performance Standard (End Use):

The goal for revegetation efforts is native community restoration. This refers to the reclamation of disturbed lands to a self-sustaining community of native species which would visually integrate with surrounding lands. Revegetation is designed to control erosion and stabilize slopes against long-term erosion using plant materials capable of self-regeneration without continued dependence on irrigation, soil amendments or fertilizer.

Describe Tasks:

Prior to revegetation, growth medium will be applied to approximately 498 acres of the site. Of the 498 acres that will receive growth medium, a thickness of six inches of topsoil will be distributed over 28 acres of the site and a thickness of three inches of topsoil will be distributed over 470 acres for a total volume of 212,152 CY. To transport the material around the site, a team of off-road haul trucks will be utilized and D8 dozer will be used to spread the material. A dozer is preferred to distribute the topsoil over a wheel type tractor because its track impressions will imprint final slopes to retain seeds and increase water retention and infiltration, thereby increasing the potential for revegetative success. Using mechanical hydroseeding equipment, areas will be seeded, mulched, and composted in a single application. A hydromulch mix will contain compost, organic mulch, fertilizer and the seed mix. See Attachments 5 and 6 for seed quotes from Pacific Coast Seed. Freedlun Hydroseeding provided a conservative cost quote for the hydroseed applications (Attachment 7). Planting shrubs and trees will require the efforts of four common laborers and two pickup trucks along with the oversight of a revegetation specialist.

VII. REVEGETATION *(use multiple sheets as needed)*

Topsoil Placement and Container Stock Planting

(↑ Describe Revegetation Activity Being Estimated)

Methods to be used:

A. Equipment - List equipment to complete identified task. For large reclamation projects, separate mine areas.

Equipment	Unit of Measure	$/Unit	# of Units	Cost ($)
CAT 988 Loader (for topsoil placement)	Hours	$163.03	422.0	$68,799
CAT 740 Haul Truck (2) (for topsoil placement)	Hours	$123.65	844.0	$104,361
Water Truck (for topsoil placement)	Hours	$46.23	422.0	$19,509
CAT D8R Dozer (for topsoil placement)	Hours	$182.46	422.0	$76,998
Pickup Truck (2) (for planting)	Hours	$26.15	240.0	$6,276
Materials & Labor for planting in PCRA	Plant	$16.74	2500.0	$41,850
			Total Equipment Cost for this Task =	$317,792

B. Labor - List all labor categories to complete identified task.

Labor Category	$/Hour (prevailing wage)	Labor Surcharge /HR (where applicable) (enter % of wage) 0.0%	# of Hours	Cost ($)
Loader Operator (Operating Engineer, Grp. 3, Area 1)	$74.79	$0.00	422.0	$31,561
Haul Truck Drivers (2) (Teamster, Grp. 4)	$61.12	$0.00	844.0	$51,585
Water Truck Driver (Teamster, Grp. 2)	$60.47	$0.00	422.0	$25,518
Dozer Operator (Operating Engineer, Grp. 3, Area 1)	$74.79	$0.00	422.0	$31,561
Laborer (4) (Laborer, Grp. 3, Area 1)	$54.49	$0.00	480.0	$26,155
Revegetation Specialist	$92.00	$0.00	120.0	$11,040
			Total Labor Cost for this Task =	$177,422

C. Materials - List all materials required to complete identified task

Item/Plant Species	Unit of measure	$/Unit	Sales tax (enter local rate in %) 0.0%	Quantity	Cost ($)
Pacific madrone	Container	$2.17	$0.00	798.0	$1,732
Grey pine	Container	$2.58	$0.00	8,990.0	$23,194
Coast live oak	Container	$2.58	$0.00	824.0	$2,126
Canyon live oak	Container	$2.58	$0.00	824.0	$2,126
Blue oak	Container	$2.58	$0.00	824.0	$2,126
Valley oak	Container	$2.58	$0.00	824.0	$2,126
Interior live oak	Container	$2.58	$0.00	824.0	$2,126
Mountain mahogany	Container	$3.15	$0.00	3,976.0	$12,524
Toyon	Container	$1.34	$0.00	3,976.0	$5,328
Scrub oak	Container	$2.17	$0.00	3,976.0	$8,628
California coffeeberry	Container	$1.74	$0.00	3,976.0	$6,918
Redberry	Container	$1.74	$0.00	3,976.0	$6,918
Hillside gooseberry	Container	$1.74	$0.00	3,976.0	$6,918
Chaparral currant	Container	$1.74	$0.00	3,976.0	$6,918
				Total Materials Cost for this Task =	$89,709

D. Total Direct Cost for this task

Equipment Cost + Labor Cost + Materials Cost = $584,923

VII. REVEGETATION *(use multiple sheets as needed)*

Hydroseeding

(↑ Describe Revegetation Activity Being Estimated)

Methods to be used:

A. Equipment - List equipment to complete identified task. For large reclamation projects, separate mine areas.

Equipment	Unit of Measure	$/Unit	# of Units	Cost ($)
Hydroseeding Equipment & Labor(PCRA)(excl. seed cost)[1]	Acre	$6,500.00	13.7	$89,050
Hydroseeding Equipment & Labor (remaining areas)[2]	Acre	$1,634.00	502.0	$820,268
1. Hydroseeding quote from Freedlun Hydroseeding.		$0.00	0.0	$0
2. Hydroseeding quote from RSMeans Data (32 92 19.14 0600).		$0.00	0.0	$0
			Total Equipment Cost for this Task =	$909,318

B. Labor - List all labor categories to complete identified task.

Labor Category	$/Hour (prevailing wage)	Labor Surcharge /HR (where applicable) (enter % of wage) 0.0%	# of Hours	Cost ($)
	$0.00	$0.00	0.0	$0
			Total Labor Cost for this Task =	$0

C. Materials - List all materials required to complete identified task

Item/Plant Species	Unit of measure	$/Unit	Sales tax (enter local rate in %) 0.0%	Quantity	Cost ($)
Artemisia californica	Pounds	$36.00	$0.00	8,169.0	$294,084
Baccharis pilularis	Pounds	$28.00	$0.00	10,122.2	$283,422
Eriogonum fasciculatum	Pounds	$12.00	$0.00	10,259.2	$123,110
Salvia leucophylla	Pounds	$80.00	$0.00	1,004.0	$80,320
Salvia mellifera	Pounds	$48.00	$0.00	1,564.9	$75,115
Achillea millefolium	Pounds	$48.00	$0.00	1,031.4	$49,507
Artemisia douglasiana	Pounds	$98.00	$0.00	530.0	$51,940
Bromus carinatus	Pounds	$8.00	$0.00	3,094.2	$24,754
Elymus glaucus	Pounds	$18.00	$0.00	3,094.2	$55,696
Eschscholzia californica	Pounds	$24.00	$0.00	1,004.0	$24,096
Heterotheca grandiflora	Pounds	$70.00	$0.00	515.7	$36,099
Lotus purshianus	Pounds	$100.00	$0.00	551.3	$55,130
Lotus scoparius	Pounds	$36.00	$0.00	1,004.0	$36,144
Lupinus nanus	Pounds	$52.00	$0.00	502.0	$26,104
Melica californica	Pounds	$55.00	$0.00	1,004.0	$55,220
Nassella pulchra	Pounds	$42.00	$0.00	2,008.0	$84,336
Poa secunda	Pounds	$30.00	$0.00	1,004.0	$30,120
Trifolium willdenovii	Pounds	$60.00	$0.00	1,004.0	$60,240
Plantago erecta	Pounds	$40.00	$0.00	41.4	$1,656
Sisyrinchium bellum	Pounds	$90.00	$0.00	19.2	$1,728
Vulpia microstachys	Pounds	$24.00	$0.00	137.0	$3,288
Carex barbarae	Pounds	$400.00	$0.00	3.0	$1,200
Carex praegracilis	Pounds	$115.00	$0.00	3.0	$345
Cyperus eragrostis	Pounds	$140.00	$0.00	6.0	$840
Hordeum brachyantherum	Pounds	$24.00	$0.00	18.0	$432
Juncus effusus	Pounds	$120.00	$0.00	1.0	$120
Juncus patens	Pounds	$135.00	$0.00	1.0	$135
Leymus triticoides	Pounds	$80.00	$0.00	6.0	$480
				Total Materials Cost for this Task =	$1,455,661

D. Total Direct Cost for this task

Equipment Cost + Labor Cost + Materials Cost = $2,364,979

VIII. MISCELLANEOUS COSTS *(use multiple sheets as needed)*

Provide documentation showing that rates, prices, and wages are available locally to all persons, including the lead agency and/or the Department.

Examples of this type of cost may include temporary storage of equipment and materials off site, special one-time permits (i.e. transportation permits for extra wide overweight loads, etc.), decommissioning a process mill (i.e. decontamination of equipment), disposal of warehouse inventories, well abandonnment, remediation of fueling and waste oil storage sites, septic system removal, costs to prepare closure and monitoring reports, site security, preserving potable water and maintaining utilities, etc.

Item/Task	Quantity	$/Unit	Cost ($)
Water Line Construction (feet)	6,000.0	$15.64	$93,840
Power Line Construction (poles)	20.0	$2,140.00	$42,800
Removal of Power Lines and Poles (poles)	20.0	$354.00	$7,080
Geotechnical Oversight During Backfilling			
Geotechnical Monitoring (Technician) (hours)	5,600.0	$90.00	$504,000
Geotechnical Monitoring (Supervision) (hours)	280.0	$155.00	$43,400
Final Geotechnical Report (hours)	80.0	$155.00	$12,400
	0.0	$0.00	$0
Permitting Costs for PCRA (lump sum)	1.0	$23,361.00	$23,361
Wetland Delineation (lump sum)	1.0	$5,631.00	$5,631
		Total Miscellaneous Costs =	$732,512

IX. MONITORING COSTS

Monitoring Task	$/Visit	# of Visits/Year	# of Monitoring Years	Cost ($)
Creek Restoration Monitoring (PCRA – 1 year) (hours)	$105.00	100.0	1.0	$10,500
Geologic Monitoring (PCRA – 1 year) (hours)	$155.00	120.0	1.0	$18,600
Annual Monitoring (Scientist/Tech)	$14,984.00	1.0	5.0	$74,920
Annual Monitoring (Project Manager)	$1,640.00	1.0	5.0	$8,200
Geologic Monitoring (Geologist)	$5,467.00	1.0	5.0	$27,335
Water Quality Monitoring (QSP	$13,800.00	1.0	5.0	$69,000
Water Quality Monitoring (QSD)	$5,480.00	1.0	5.0	$27,400
Report Preparation (Scientist/Tech)	$5,750.00	1.0	5.0	$28,750
Report Preparation (Project Manager)	$1,370.00	1.0	5.0	$6,850
Annual Weed Control and General Maintenance	$65,713.00	2.0	5.0	$657,130
			Total Monitoring Costs =	$928,685

X. SUMMARY OF COSTS

This section shall be used to summarize all the cost sheets in one place.

(V) Total of all Plant Structures & Equipment Removal Costs	$	207,518
(VI) Total of all Primary Reclamation Activities Costs	$	45,658,134
(VII) Total of all Revegetation Costs	$	2,949,901
(VII) Total of all Miscellaneous Costs	$	732,512
(IX) Total of all Monitoring Costs	$	928,685
Total of Direct Costs	$	**50,476,750**

XI. SUPERVISION / PROFIT & OVERHEAD / CONTINGENCIES / MOBILIZATION

(A) Supervision (	2.4	%)	$	1,208,920
(B) Profit/Overhead (	3.9	%)	$	1,964,514
(C) Contingencies (	2.0	%)	$	1,009,535
(D) Mobilization (	2.0	%)	$	1,009,535
Total of Indirect Costs			$	**5,192,504**
Total of Direct and Indirect Costs			$	**55,669,254**
(E) Lead Agency and/or Dept. of Conservation Administrative Costs	5%		$	2,783,463

Total Estimated Cost of Reclamation $ **58,452,717**

Attachment 1

AMS
Aggregate Machinery Specialist

924 Calle Negocio • Unit A
San Clemente, CA 92673
Phone: (949) 366-3070 • Fax: (949) 366-3069
www.aggregatemachineryspecialist.net

September 7, 2018

Mr. Travis Jokerst
ENVIROMINE, INC.
3511 Camino del Rio South
Suite 403
San Diego, CA 92108

SUBJECT: Lehigh Hanson Permanente Plant
QUOTE #: 1607-1074-JFM Rev 1

Dear Travis,

Please refer to our previous cost estimate of July 12, 2016. Based on shipment in the second half of 2019, we would expect the following prices:

ITEM 1 Primary Station

PRICE: $1,250,000.00

OPTIONS

A. **$ 38,065.00**
B. **$ 74,060.00**

ITEM 2 Dust Collector

PRICE: $ 45,095.00

B. Mounting **$ 20,640.00**

SUMMARY – Items 1 and 2

Equipment	**$1,427,860.00**
Sales Tax 8%	**$ 114,230.00**
Freight	**$ 111,360.00**
TOTAL	**$1,653,450.00**

ITEM 3 Pit Conveyor

PRICE:	**$1,152,050.00**

OPTIONS

A.	**$ 12,995.00**
B.	**$ 3,715.00**
C.	**$ 557,600.00**
D.	**$ 32,890.00**
Subtotal:	**$1,759,250.00**
Lot of four (4) conveyors:	**$7,037,000.00**
Sales Tax 8%	**$ 562,960.00**
Freight	**$ 364,240.00**
TOTAL:	**$7,964,200.00**

ITEM 4 Stacker

PRICE:	**$ 626,280.00**

OPTIONS

A.	**$ 3,235.00**
B.	**$ 5,025.00**
C.	**$ 1,470.00**
D.	**$ 1,530.00**
E.	**$ 9,940.00**
Subtotal:	**$ 647,480.00**

Delivery currently:

Primary	20 – 40 weeks
Dust Collector	14 – 16 weeks
Overland Conveyor	18 – 22 weeks
Telescoping Conveyor	16 – 20 weeks

Freights are based on current freight estimates and would be invoiced at our actual cost. Sales tax is quoted at current rate and would be adjusted to appropriate rate at time of invoice. Terms to be agreed upon.

J.F. Mulligan
September 7, 2018

AMS
Aggregate Machinery Specialist

924 Calle Negocio • Unit A
San Clemente, CA 92673
Phone: (949) 366-3070 • Fax: (949) 366-3069
www.aggregatemachineryspecialist.net

July 12, 2016

Mr. Damien Galford
Project Manager
ENVIROMINE, INC.
135 Camino Dorado, Suite 11
Napa, CA 94558

SUBJECT: Lehigh Hanson Permanente
QUOTE #: 1607-1074-JFM

Dear Mr. Galford,

We are pleased to forward BUDGET prices and specifications for the Primary Station at Lehigh Hanson Permanente. Final prices may vary dependent upon when and if an order is placed. These prices are valid until December 30, 2017.

Prices and deliveries are all over the place. In general factories are somewhat busy with reduced staff, handing one project at a time. There is no consistency in the market. This being said we realize this is a long term project; currently complete shipment would be accomplished in a 6 – 8 month period.

Our invoice EQ16118 for services in relation to this project is attached.

We trust this meets your requirements and that you will not hesitate in contacting us if you need additional information.

Very truly yours,

AGGREGATE MACHINERY SPECIALIST

John F. Mulligan

Cc: J.C. Mulligan
T. ONeill

ENVIROMINE
Lehigh Hanson Permanente Reclamation

July 12, 2016

ITEM 1 Primary Station

1. New Telsmith 3858 PP-VGF Portable Primary Plant consisting of the following:

Structural steel chassis with blocking supports, crusher discharge hopper, chutes, and all necessary supporting structures.

Telsmith 60" x 24' Heavy Duty Vibrating Grizzly Feeder complete with mild steel pan, 1/2" thick AR steel pan liner, 10' long step deck AR steel grizzly bar section, and heavy duty coil support springs with pads.

- Dual shaft gear driven vibrating unit with adjustable counterweights, 140 mm oil lubricated bearings, 1/2 HP oil lube system with electric circulating pump and oil reservoir, and drive sheave.

- Variable Frequency, 60 HP, 1800 RPM, totally enclosed, fan cooled, high torque, ball bearing, squirrel cage motor with V-belt drive for motor including motor sheave, bushing for motor sheave, v-belts for standard drive centers, and pivotal motor base

Telsmith Model 38" x 58" Roller Bearing Jaw Crusher complete with fabricated steel frames, manganese steel jaw dies, AR cheek plates, hydraulic locking and unlocking wedge lock mechanism with manual hand pump, toggle beam, fly wheel and crusher sheave.

- Automatic pressure oil lubrication system including 2 HP electric oil pump, oil tank, filter, pressure regulator, by-pass valve, pressure gauge, alarm system.

- Hydraulic toggle relief cylinders controlled by a hydraulic power unit with 20 HP electric driven pump, reservoir, filter, water to oil cooler, relief valve and hydraulic controls.

- V-belt drive for 1200 RPM motor including motor sheave, bushing for motor sheave and v-belts for standard drive centers. (Shaft diameter, length and keyway details must be provided if motor supplied by Customer.)

- V-belt drive guard consisting of guard with mounting bracket for attachment to standard foundations. Guards comply with most safety codes, but may require field modifications to meet specific codes.

- Quad axles and highway towing kit including axles, axle support, air brakes, wheels, tires, kingpin, mud-flaps, and lights with reflectors.

- 250 HP, 1200 RPM, TEFC electric motor with slide-rails.

- 54" x 32'-3" End Discharge Conveyor complete with V-belt and torque arm reducer drive, 20 HP, 1800 RPM, TEFC, 3/60/460 electric motor, drive guard, nip guards, idlers, 3-ply 3/16" x 1/16" conveyor belting, lagged head pulley, self-cleaning tail pulley, skirting with rubber flashing, belt scraper, and backstop.

PRICE:	ExWorks Mequon, WI	**$1,068,000.00**

OPTIONS/ACCESSORIES

A. Self-contained gas engine powered 4-point hydraulic leveling system including 6" bore hydraulic rams with 36" stroke, control valves, hoses, and mounting brackets. Plant must be blocked for operation.

ADD: $ 30,450.00

B. Lift off motor starter panel with wiring to plant motors and variable speed control.

ADD: $ 59,250.00

ITEM 2 Dust Collector

A. DCE Model DLMV 60/15 Type F (H + K11- 15 Hp Integral Fan) Base Model

- Finish cost: standard finish
- Seal frame assembly (tube sheet): standard –mild steel
- Inserts: mild steel
- Filter bags: Dura-Life™ Polyester
- Control Box with Timer: with solenoids (NEMA 4 ENCL)
- Pressure gauge: Magnehelic
- Motor options: fan rotation
- Compressed air components: piggyback filter and regulator
- Housing assembly (upstands): vertical, unmounted
- Clamp assembly: standard

PRICE: fob Louisville, KY **$ 40,700.00**

B. Mounting

Designed to be installed on the discharge conveyor, removed when traveling.

Vertical mounting support, corrugated metal conveyor covers, discharge head box for conveyor.

PRICE: fob Factory **$ 18,575.00**

TOTAL: $ 59,275.00

SUMMARY – Item 1

Primary	$1,068,000.00
Leveling Jacks	$ 30,450.00
Motor Control	$ 59,250.00
Dust Collector with Mounting	$ 59,275.00
Subtotal	**$1,216,975.00**
Sales Tax (4.81%) – *Special Rate*	$ 58,536.00
Freight, estimated	$ 85,189.00
TOTAL	**$1,360,700.00**

ITEM 3 Masaba 42" x 2375' Overland Conveyor

- **Frame –** 8" channel, bolt in cross members
- **Supports** – 2' tall intermediate supports on 20' spacing, head end supports for 8' discharge height
- **Drive –** Falk V-Class shaft mounted right-angle gear reducer assembly with cooling fan and L.S. Hindon emergency brake
- **Motor –** 300hp electric with VFD control package
- **V-Belt Drive –** with drive guard
- **Capacity –** 2000 TPH based on 100# per cu/ft of material
- **Belt Speed –** 511 FPM @ 212' decline
- **Pulleys – ENGINEERED CLASS PULLEYS**
- **Take Up –** Gravity take up tower on tail end
- **Belting –** Quoted Separately
- **Primary Belt Scraper –** Martin Pit Viper Primary with Twist Tensioner
- **Secondary Belt Scraper –** Martin Secondary Scraper with tungsten-carbide blade
- **V-Plow –** On return side
- **Transition Idlers –** CEMA D, PPI, 20 degree sealed 5" diameter trough idlers
- **Troughing Idlers –** CEMA D, PPI, 35 degree sealed 5" diameter trough idlers, 3.5' spacing
- **Return Idlers –** CEMA D, PPI, sealed 5" return idlers, 10' spacing
- **Self-Aligning Idlers –** CEMA D, PPI 50' from ends, then 100' spacing
- **Hopper –** 6ft long with adjustable rubber flashing
- **Switchgear – NOT INCLUDED**
- **Guards –** Tail pulley guard, v-belt guard and nip guard on head pulley. We do not warrant that our guards will meet all local codes. It is the responsibility of the end user to have them checked by a local inspector
- **Steel Shot Blasted**
- **Primer –** (1) coat of 2 part urethane primer
- **Paint –** (1) coat of 2 part urethane paint
- **Owner's Manual –** (2) copies for maintenance and parts

PRICE:	fob, South Dakota	**$ 985,000.00 each**

OPTIONS/ACCESSORIES

A. Safety Cut-off switch with cable	**ADD:**	**$ 9,875.00**
B. Discharge Hood with replaceable AR liners	**ADD:**	**$ 3,000.00**
C. Fenner-Dunlop 42" PSR 3-1200 Granite 3/8 x ¼ covers	**ADD:**	**$ 490,000.00**
D. Dust collector, Model DLVM-2010, 7½ Hp, vertical mounting, support legs	**ADD:**	**$ 28,125.00**

Total for one (1) conveyor:	**$1,516,000.00**
Lot of four (4) conveyors:	**$6,064,000.00**
Sales Tax (4.81%) – *Special Rate*	$ 291,070.00
Freight, estimated	$ 303,230.00
TOTAL:	**$6,717,575.00**

ITEM 4 Masaba 42" x 190' Pit Portable Magnum Telescoping Stacker

Conveyor Frame
Main Frame – 84" Deep engineered truss
Extra Chord Angle – From tail end to head end undercarriage pinning point.
Counterweight – On-board design installed in the main frame tail
Stinger Frame – 66" Deep engineered truss
Stinger Drive – ***MASABA* TRACK TECHNOLOGY**. Eliminates danger of cable breakage and uncontrolled roll back - No winch or cable. Conveyor extends to 190' length

Road Portability
Tubular Undercarriage – Hydraulic raise & lower with 30 hp pumping unit
Swing Axle – Pit portable tandem walking beam axle with dual (8) 385/65D-19.5 tires and wheel
Axle Jacks – Jacks hydraulically lift conveyor to allow swing axle deployment
Power Travel – (1) hydraulic drive with #100 chain and sprockets
Towing Eye – For pit transport
Anchor Pivot Plate - Maintains tail end during radial travel.

Main & Stinger Components
Drives – Class II head end
Motors – (2) 60 hp/(2) 50 hp
Gear Reducers – Dodge TAII shaft mount with backstop
Capacity – 1500 TPH based on 100# per cu/ft of material at 18 degrees
Belt Speed – 450/600 FPM
Head Pulley – Heavy Duty 18" diameter drum pulley with 3/8" herringbone lagging
Tail Pulley – Heavy Duty 16" diameter self-cleaning wing type pulley
Take Ups – Screw type
Belting – 3-ply 3/16" x 1/16" 330 PIW
Belt Splice – Flexco mechanical steel fasteners
Belt Scraper – Martin Pit Viper with Twist Tensioner
Transition Idlers *(main)* – CEMA C, Precision, 20 degree, sealed 5" diameter idlers
Troughing Idlers – CEMA C, Precision, 35 degree, sealed 5" diameter, 4' spacing
Return Idlers – CEMA C, Precision, sealed 5" return idlers, 10' spacing
Self-Aligning *(main)* – (1) CEMA C, Precision, self-aligning idler
Self-Aligning Return *(stinger)* – ASGCO Tru-Trainer Return Roll
Hopper – 6' long hopper with adjustable rubber flashing, radial receiving hopper and rock ledge

Controls
Complete Switchgear - manual operation for extend/retract, raise/lower, axle jacks, start/stop conveyors and main disconnect
PLC – Manual – electric buttons control. Power travel, conveyor raise and conveyor extension.
Material Flow Sensor – pauses conveyor movement when material is not present

General Specifications
Guards – Tail pulley guard, v-belt guard and nip guard on head pulley. We do not warrant that our guards will meet all local codes. It is the responsibility of the end user to have them checked by a local inspector
Steel Shot Blasted
Primer – (1) coat of 2 part urethane primer
Paint – (1) coat of 2 part urethane paint
Owner's Manual – (2) copies for maintenance and parts

PRICE:	fob, South Dakota	**$ 563,650.00**

OPTIONS/ACCESSORIES

A. Remote grease bank for pulley bearings	**ADD:**	**$**	**2,750.00**
B. Wireless remote control for all manual conveyor functions 1,000 ft. range	**ADD:**	**$**	**4,295.00**
C. Impact idlers in lieu of steel rolls in load area	**ADD:**	**$**	**1,190.00**
D. Safety switch, radial travel safety switches	**ADD:**	**$**	**1,315.00**
E. Dual power travel, 4-wheel drive	**ADD:**	**$**	**8,500.00**
Total with options:		**$**	**581,700.00**
Sales Tax (4.81%) – *Special rate*		$	27,920.00
Freight, estimated		$	29,080.00
TOTAL:		**$**	**638,700.00**

Delivery currently:

Primary	16 – 20 weeks
Dust Collector	14 – 16 weeks
Overland Conveyor	16 – 20 weeks
Telescoping Conveyor	14 – 16 weeks

Freights are based on current freight estimates and would be invoiced at our actual cost. Sales tax is quoted at current rate and would be adjusted to appropriate rate at time of invoice. Terms to be agreed upon.

J.F. Mulligan
July 12, 2016

Attachment 2

Kristen

To: Travis Jokerst
Subject: RE: FACE Backfill Requirement

From: Clifford, Robert [mailto:robert.clifford@stantec.com]
Sent: Tuesday, August 20, 2019 9:32 AM
To: Flagan, Talia M (Cupertino) USA <Talia.Flagan@LehighHanson.com>
Cc: Gold, Gregory <Gregory.Gold@stantec.com>
Subject: RE: FACE Backfill Requirement

The fill volume from the June 24 2019 survey to the Current RPA is

Fill volume (end surface above start surface):
805,832,503.37 cubic feet
29,845,648.27 cubic yards

The 0.9M additional fill is from the south side mining of the sliver cut. Do you need this back in memo form and PE stamped?

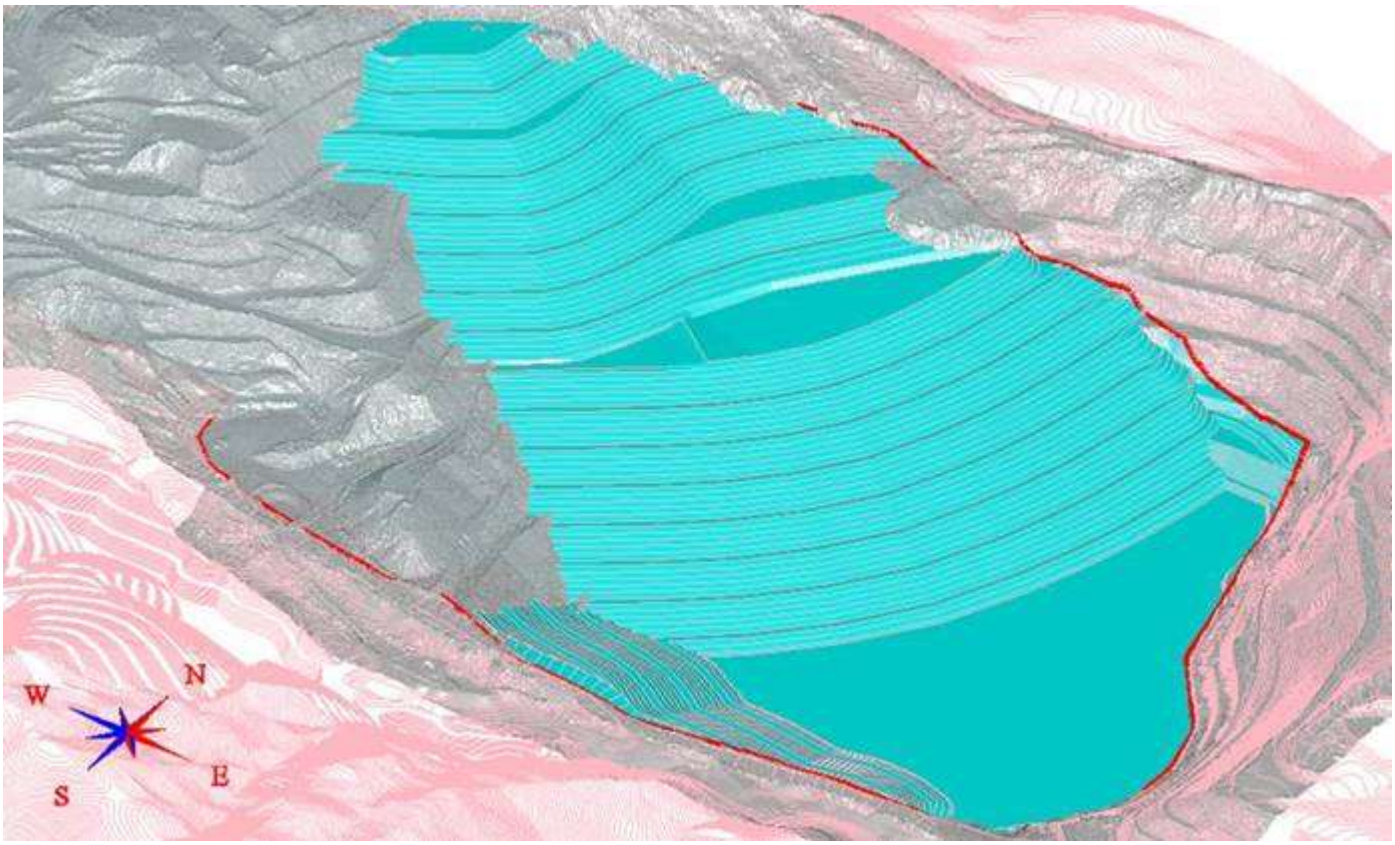

Robert Clifford
Senior Project Manager
Senior Mine Engineer
Direct: 720 889-6108
robert.clifford@stantec.com

Attachment 3

ESTIMATED DOZING PRODUCTION ● Universal Blades ● D7G through D11T

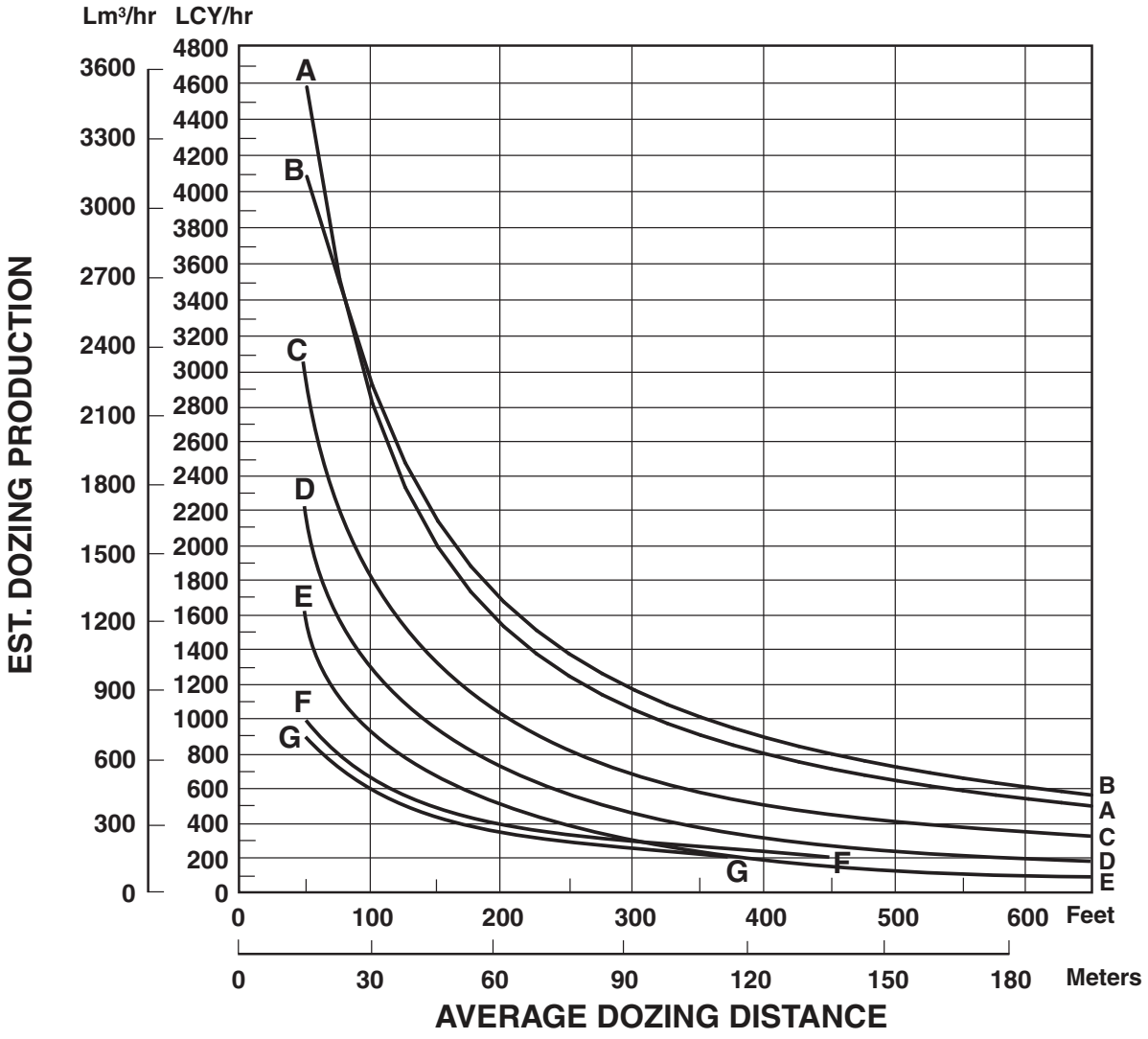

KEY

A — D11T-11U
B — D11T CD
C — D10T-10U
D — D9R/D9T-9U
E — D8R/D8T-8U
F — D7R Series 2-7U
G — D7G-7U

NOTE: This chart is based on numerous field studies made under varying job conditions. Refer to correction factors following these charts.

JOB CONDITION CORRECTION FACTORS

	TRACK-TYPE TRACTOR	WHEEL-TYPE TRACTOR
OPERATOR —		
Excellent	1.00	1.00
Average	0.75	0.60
Poor	0.60	0.50
MATERIAL —		
Loose stockpile	1.20	1.20
Hard to cut; frozen —		
with tilt cylinder	0.80	0.75
without tilt cylinder	0.70	—
Hard to drift; "dead" (dry, non-cohesive material) or very sticky material	0.80	0.80
Rock, ripped or blasted	0.60-0.80	—
SLOT DOZING	1.20	1.20
SIDE BY SIDE DOZING	1.15-1.25	1.15-1.25
VISIBILITY —		
Dust, rain, snow, fog or darkness	0.80	0.70
JOB EFFICIENCY —		
50 min/hr	0.83	0.83
40 min/hr	0.67	0.67
BULLDOZER*		
Adjust based on SAE capacity relative to the base blade used in the Estimated Dozing Production graphs.		
GRADES — See following graph.		

***NOTE:** Angling blades and cushion blades are not considered production dozing tools. Depending on job conditions, the A-blade and C-blade will average 50-75% of straight blade production.

% Grade vs. Dozing Factor

(–) Downhill
(+) Uphill

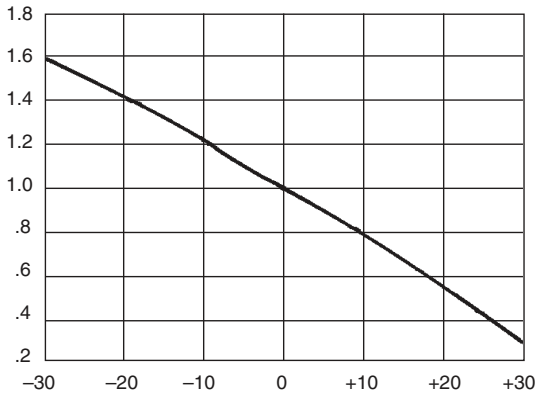

ESTIMATING DOZER PRODUCTION OFF-THE-JOB

Example problem:

Determine average hourly production of a D8T/8SU (with tilt cylinder) moving hard-packed clay an average distance of 45 m (150 feet) down a 15% grade, using a slot dozing technique.

Estimated material weight is 1600 kg/Lm^3 (2650 lb/LCY). Operator is average. Job efficiency is estimated at 50 min/hr.

Uncorrected Maximum Production — 458 Lm^3/h (600 LCY/hr) (example only)

Applicable Correction Factors:

Hard-packed clay is "hard to cut" material –0.80
Grade correction (from graph) . . . . . .–1.30
Slot dozing . . . . . .–1.20
Average operator . . . . . .–0.75
Job efficiency (50 min/hr) . . . . . .–0.83
Weight correction . . . . . .(2300/2650)–0.87

Production = Maximum Production × Correction Factors
= (600 LCY/hr) (0.80) (1.30) (1.20) (0.75) (0.83) (0.87)
= 405.5 LCY/hr

To obtain production in metric units, the same procedure is used substituting maximum uncorrected production in Lm^3.
= 458 Lm^3/h × Factors
= 309.6 Lm^3/h

Attachment 4

LOADED

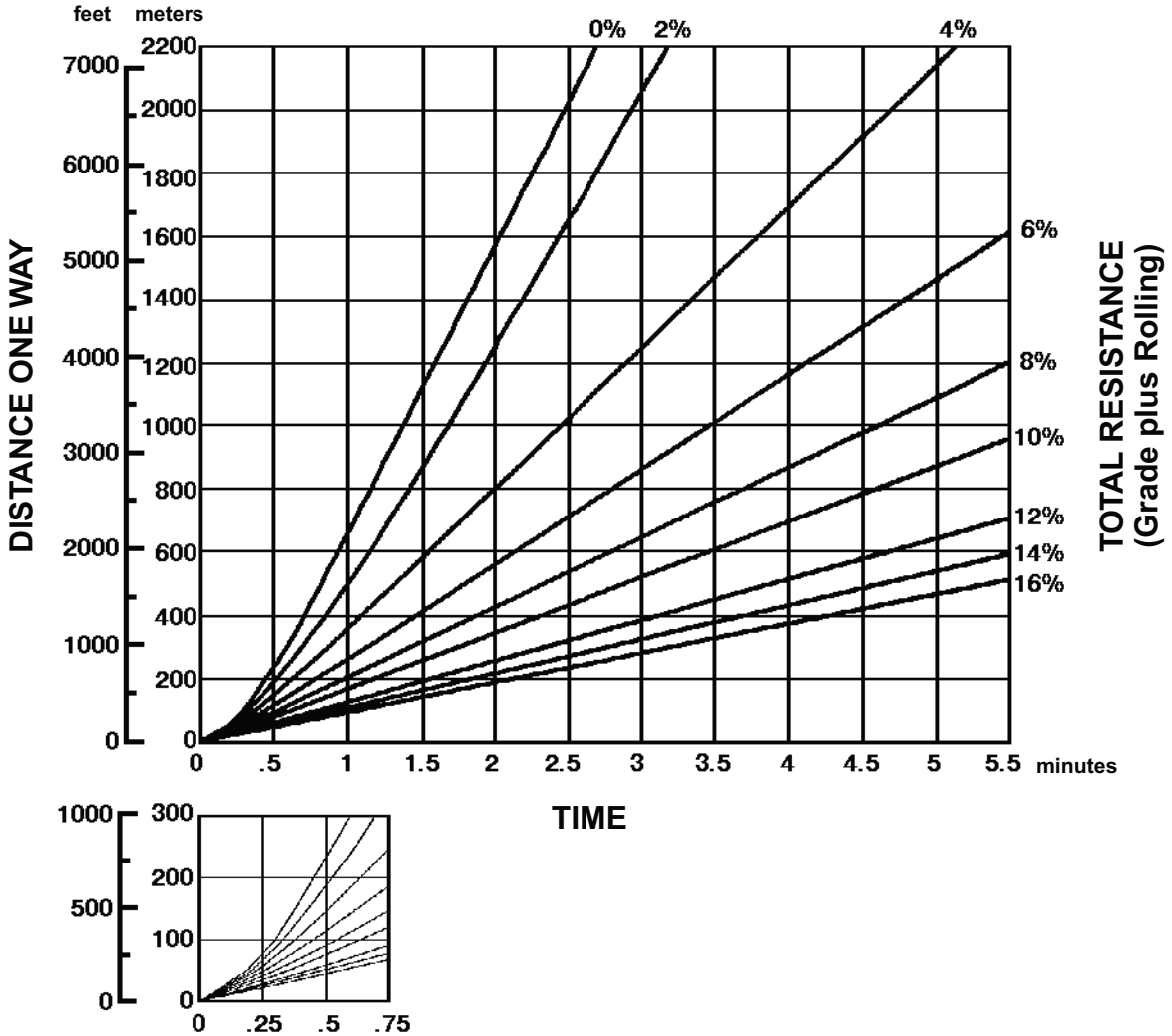

Empty weight: 66 575 kg (146,770 lb)
Payload: 47 175 kg (104,000 lb)

EMPTY

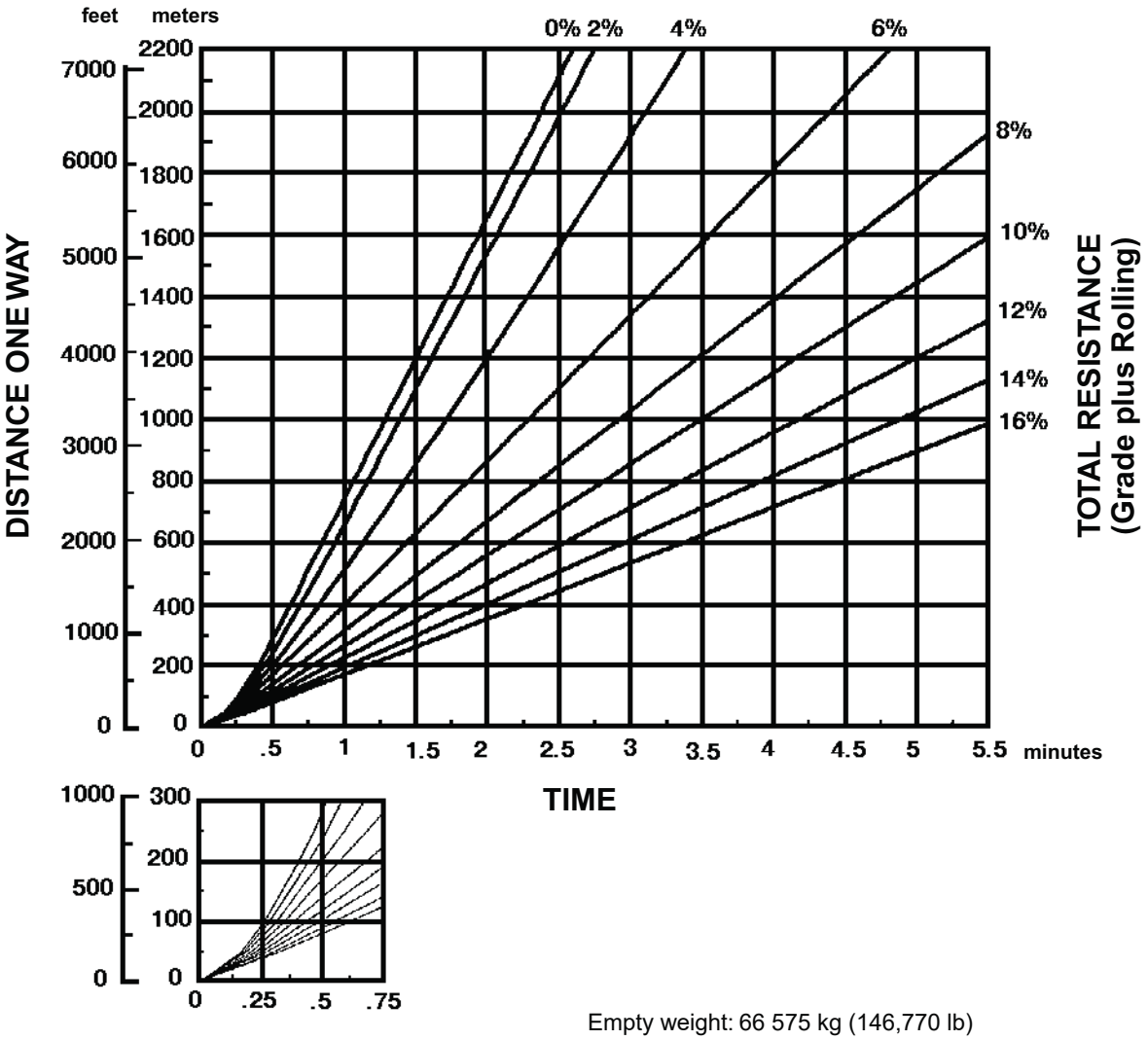

Empty weight: 66 575 kg (146,770 lb)

Attachment 5

Warren Coalson
Enviromine, Inc.
3511 Camino Del Rio South, Suite 403
San Diego, CA 92108

August 22, 2019

Re: Permanente Quarry Cupertino

Dear Mr. Coalson:

Thank you for contacting Pacific Coast Seed, Inc. as your seed supplier for the above referenced project. We anticipate that we will have the below listed seed in sufficient quantities to seed the ~13.70 acres located in Cupertino, CA. The below items have been priced assuming the seed is provided on a Standard Commercial Quality basis. These items will be mixed and labeled in accordance with California and Federal Seed Laws and consist of the following:

Table 1:

SCIENTIFIC NAME	COMMON NAME	Pounds Per Acre Bulk Seed	Cost Per Pound Bulk Seed
SHRUBS			
Artemisia californica	coastal sagebrush	10	$36.00
Baccharis pilularis	coyotebrush	6	$28.00
Eriogonum fasciculatum	Eastern Mojave buckwheat	16	$12.00
Lotus scoparius (now known as Acmispon glaber)	deer weed	2	$36.00
Salvia mellifera	black sage	4.3	$48.00
GRASSES AND HERBS			
Achillea millefolium	common yarrow	2	$48.00
Artemisia douglasiana	Douglas' sagewort	1.9	$98.00
Bromus carinatus	California brome	10	$8.00
Clarkia purpurea ssp. quadrivulnera	winecup clarkia	1	$85.00
Elymus glaucus	blue wildrye	6	$18.00
Heterotheca grandiflora	telegraph weed	1	$90.00
Lotus purshianus (now known as Acmispon americanus)	Spanish Clover	3.6	$100.00
Plantago erecta	dotseed plantain	3	$40.00

Sisyrinchium bellum	western blue-eyed grass	1.4	$90.00
Vulpia microstachys	small fescue	10	$24.00

Table 2:

Scientific Name	Common Name	Lb/Acre	Price/Lb
Artemisia douglasiana	mugwort	2	$98.00
Carex barbarae	valley sedge	3	$400.00
Carex praegracilis	field sedge	3	$115.00
Cyperus eragrostis	tall flatsedge	6	$140.00
Hordeum brachyantherum	meadow barley	18	$24.00
Juncus effusus	bog rush	1	$120.00
Juncus patens	common rush	1	$135.00
Leymus triticoides	creeping wildrye	6	$80.00
Total		**40**	

Please provide a purchase order by June 1st on the year preceding that in which the seed purchase is intended. Some items may require extra collections be made in advance to assume supply of the quantities requested.

Thank you again for consulting Pacific Coast Seed, Inc. as your seed supplier for this project. We look forward to working with you on future projects.

Sincerely,

Pacific Coast Seed, Inc

Kitty Luckert
Office Manager

Attachment 6

Warren Coalson
Enviromine, Inc.
3511 Camino Del Rio South, Suite 403
San Diego, CA 92108

August 22, 2019

Re: Permanente Quarry Cupertino

Dear Mr. Coalson:

Thank you for contacting Pacific Coast Seed, Inc. as your seed supplier for the above referenced project. We anticipate that we will have the below listed seed in sufficient quantities to seed the ~517 acres located in Cupertino, CA. The below items have been priced assuming the seed is provided on a Standard Commercial Quality basis. These items will be mixed and labeled in accordance with California and Federal Seed Laws and consist of the following:

Table 1:

SCIENTIFIC NAME	COMMON NAME	Pounds Per Acre Bulk Seed	Cost Per Pound Bulk Seed
SHRUBS			
Artemisia californica	coastal sagebrush	16 (8) *	$36.00
Baccharis pilularis	coyotebrush	20 (6) *	$28.00
Eriogonum fasciculatum	California buckwheat	20 (10) *	$12.00
Salvia leucophylla	Purple sage	2 *	$80.00
Salvia mellifera	black sage	3	$48.00
GRASSES AND HERBS			
Achillea millefolium	common yarrow	1	$48.00
Artemisia douglasiana	Douglas' sagewort	1 (2) *	$98.00
Bromus carinatus	California brome	6 (8)	$8.00
Elymus glaucus	blue wildrye	6 (8)	$18.00
Eschscholzia californica	California Poppy	2 (1.5)	$24.00
Heterotheca grandiflora	telegraph weed	1 *	$70.00
Lotus purshianus	Spanish Clover	1 (1.5)	$100.00
Lotus scoparius	Deerweed	2	$36.00
Lupinus nanus	Sky lupine	1 (2)	$52.00
Melica californica	Californica melic	2	$55.00

Nasella pulchra	Purple needlegrass	4	$42.00
Poa secunda	One-sided bluegrass	2	$30.00
Trifolium wildenovii	Tomcat clover	2	$60.00
Total		**93**	

Please provide a purchase order by June 1st on the year preceding that in which the seed purchase is intended. Some items may require extra collections be made in advance to assume supply of the quantities requested and are noted with a *. Numbers in ( ) show the more usual seeding rates for these seeds.

Thank you again for consulting Pacific Coast Seed, Inc. as your seed supplier for this project. We look forward to working with you on future projects.

Sincerely,

Pacific Coast Seed, Inc

Patricia L. Gomez

Patricia L. Gomez
Sales & Design

1925 N. McArthur Dr, Suite 100 Tracy, CA 95376 Ph: 925-373-4417 Fax: 925-373-6855
www.pcseed.com

Attachment 7

FREEDLUN HYDROSEEDING INC

518 BAYWOOD CT, VACAVILLE, CA 95688

LICENSE #740810

800-300-9423 707-448-9423

FAX 707-446-8146

DEAN@FREEDLUN.NET OR TERRI@FREEDLUN.NET

Price Quote

August 21, 2019
Kristen Davist
EnviroMine, Inc.
RE: Reclamation Cost Estimate 2019

Hello Kristen
Please find our updated pricing for the following BFM products:
Hydroseed using Flexterra: 20+ acres @ $6,500.00 per acre
Hydroseed using ProMatrix: 20 + acres @ $4,900.00 per acre (no longer hydroblanket)
Both products shall be applied @ 4,000 lbs/acre

This quote is for one application. Should more applications be required, additional charges will apply. Full payment of the quoted price is due within 30 days of application. Late payments will incur an additional fee of 1.5% per month.
This quote assumes customer will provide legal access to the property and to an ample water supply. If no water is available, let us know. This quote excludes any soil prep, soil amendments, any guarantee of growth, watering, weeding, or maintenance. The seed we purchase is determined by the details you have provided and authorized above, and is State inspected for germination percentages.
If a payment & performance bond is required, our rate is 3%. Unless we have been notified of such requirement in writing, the cost of any bond is not included in our quote, and will be added to the final quoted price. Our company is SB/MICRO certified through the State of California. Init. ____

Due to the changing prices of seed, the quoted price is good for 60 days. Let us know if you want to 'Lock-in' a price for a date more than 2 months away.

To accept this proposal, initial where indicated, sign and date below & fax back to 707-446-8146. Once accepted, this quote will become a contract.
In any legal action undertaken to enforce its terms, the successful party will be entitled to any and all attorney fees and legal costs incurred in connection with such an enforcement action.

x_____ Date_____ Initial Required Above

Printed name_____Title_____

APPENDIX J:

AMENDED NPDES PERMIT

ORDER No. R2-2019-0024
NPDES No. CA0030210

The following discharger is subject to waste discharge requirements (WDRs) set forth in this Order:

Table 1. Discharger Information

Discharger	Lehigh Southwest Cement Company and Hanson Permanente Cement, Inc.
Facility Name	Permanente Plant
Facility Address	24001 Stevens Creek Blvd. Cupertino, CA, 95014 Santa Clara County
CIWQS Place Number	273205

Table 2. Discharge Locations

Discharge Point	Effluent Description	Discharge Point Latitude (North)	Discharge Point Longitude (West)	Receiving Water
001	Treated quarry dewatering water, Crusher Slope Drainage Area stormwater, Cement Plant Reclaim Water System wastewater, Rock Plant aggregate wash water, Truck Wash water, subsurface flow from the East Materials Storage Area (EMSA) (intercepted by the EMSA French drain, EMSA catchment and drainage swales, and any additional related infrastructure), non-stormwater, and stormwater, discharged from Final Treatment System (FTS)-Upper	37.31713°	-122.11165°	Permanente Creek
002	Settled stormwater from slope north of Pond 13B, discharged from Pond 13B	37.31674°	-122.10167°	Permanente Creek
004	Potential discharge of settled stormwater from rain falling directly on Rock Plant and runoff from adjacent hillside, discharged from Pond 17	37.31431°	-122.08893°	Permanente Creek
005	Settled stormwater from former Aluminum Plant, entry road, nearby hillside, and rain falling in the Rock Plant area, discharged from Pond 20	37.31899°	-122.087159°	Permanente Creek
006	Settled stormwater from EMSA, discharged from Pond 30	37.32241°	-122.08551°	Permanente Creek
007	Same sources as Discharge Point No. 001, discharged from FTS-Lower	37.31778°	-122.08750°	Permanente Creek

Table 3. Administrative Information

This Order was adopted on:	July 10, 2019
This Order shall become effective on:	September 1, 2019
This Order shall expire on:	August 31, 2024
CIWQS Regulatory Measure Number	432980
The Discharger shall file a Report of Waste Discharge for updated WDRs in accordance with California Code of Regulations, title 23, and as an application for reissuance of a National Pollutant Discharge Elimination System (NPDES) permit no later than:	December 5, 2023
The U.S. Environmental Protection Agency (U.S. EPA) and the California Regional Water Quality Control Board, San Francisco Bay Region, have classified this discharge as follows:	Major

I hereby certify that this Order with all attachments is a full, true, and correct copy of the Order adopted by the California Regional Water Quality Control Board, San Francisco Bay Region, on the date indicated above.

2019.07.17
10:21:16 -07'00'

Michael Montgomery, Executive Officer

Contents

I. Facility Information 4
II. Findings 4
III. Discharge Prohibitions 5
IV. Effluent Limitations and Discharge Specifications 5
A. Discharge Point Nos. 001 and 007 5
B. Discharge Point Nos. 002, 004, 005, and 006 6
C. Acute Toxicity (Discharge Point Nos. 001 and 007) 6
V. Receiving Water Limitations 6
VI. Provisions 8
A. Standard Provisions 8
B. Monitoring and Reporting 9
C. Special Provisions 9
1. Reopener Provisions 9
2. Effluent Characterization Study and Report 10
3. Pollutant Minimization Program 10
4. Receiving Water Data Reporting 11
5. Dry Season Discharge Requirements 11
6. Selenium in Fish Tissue Reasonable Potential Study 12

Tables

Table 1. Discharger Information 1
Table 2. Discharge Locations 1
Table 3. Administrative Information 2
Table 4. Effluent Limitations – Discharge Point Nos. 001 and 007 5
Table 5. Effluent Limitations – Discharge Point Nos. 002, 004, 005, and 006 6

Attachments

Attachment A – Definitions A-1
Attachment B – Facility Map B-1
Attachment C – Process Flow Diagram C-1
Attachment D – Federal Standard Provisions D-1
Attachment E – Monitoring and Reporting Program (MRP) E-1
Attachment F – Fact Sheet F-1
Attachment G – Regional Standard Provisions and Monitoring and Reporting Requirements G-1
Attachment S – Stormwater Provisions, Monitoring, and Reporting Requirements S-1

I. FACILITY INFORMATION

Information describing the Lehigh Southwest Cement Company's (Discharger's) Permanente Plant (Facility) is summarized in Table 1 and Fact Sheet (Attachment F) sections I and II.

II. FINDINGS

The California Regional Water Quality Control Board, San Francisco Bay Region (Regional Water Board), finds the following:

A. Legal Authorities. This Order serves as WDRs pursuant to California Water Code article 4, chapter 4, division 7 (commencing with § 13260). This Order is also issued pursuant to federal Clean Water Act (CWA) section 402 and implementing regulations adopted by U.S. EPA, and Water Code chapter 5.5, division 7 (commencing with § 13370). It shall serve as a National Pollutant Discharge Elimination System (NPDES) permit authorizing the Discharger to discharge into waters of the United States as listed in Table 2 subject to the WDRs in this Order.

B. Background and Rationale for Requirements. The Regional Water Board developed the requirements in this Order based on information the Discharger submitted as part of its application, information obtained through monitoring and reporting programs, and other available information. The Fact Sheet (Attachment F) contains background information and rationale for the requirements in this Order, and is hereby incorporated into and constitutes findings for this Order. Attachments A through E, G, and S are also incorporated into this Order.

C. Provisions and Requirements Implementing State Law. No provisions and requirements in this Order are included to implement State law only.

D. Cease and Desist Order. The Regional Water Board adopted Cease and Desist Order No. R2-2014-0011 (later amended through Order No. R2-2017-0031) to enforce foreseeable violations of Order No. R2-2014-0010 (later amended through Order No. R2-2017-0030) (previous order). The Cease and Desist Order required full compliance with the previous order by October 1, 2017, and this Order rescinds the previous order. Therefore, the Cease and Desist Order is no longer needed and can be rescinded.

E. Technical Information Requirement. On August 1, 2018, the Executive Officer ordered the Discharger to provide technical information about Facility discharges and their effects on Permanente and Stevens creeks pursuant to Water Code section 13267. The Monitoring and Reporting Program (MRP) (Attachment E) incorporates and updates those information requirements; therefore, the August 1, 2018, order is no longer needed and can be rescinded.

F. Notification of Interested Parties. The Regional Water Board notified the Discharger and interested agencies and persons of its intent to prescribe these WDRs and rescind the Cease and Desist Order, and provided an opportunity to submit written comments and recommendations. The Fact Sheet provides details regarding the notification.

G. Consideration of Public Comment. The Regional Water Board, in a public meeting, heard and considered all comments pertaining to the discharge. The Fact Sheet provides details regarding the public hearing.

THEREFORE, IT IS HEREBY ORDERED that Order No. R2-2014-0010, as amended by Order No. R2-2017-0030; Cease and Desist Order No. R2-2014-0011, as amended by Order No. R2-2017-0031; and the August 1, 2018, order pursuant to Water Code section 13267 are rescinded upon the effective date of this Order, except for enforcement purposes, and, in order to meet the provisions of California Water Code division 7 (commencing with § 13000) and regulations adopted thereunder, and the provisions of the CWA and regulations and guidelines adopted thereunder, the Discharger shall comply with the requirements in this Order. This action in no way prevents the Regional Water Board from taking enforcement action for past violations of rescinded orders.

III. DISCHARGE PROHIBITIONS

A. Discharge of treated or untreated wastewater at a location or in a manner different than described in this Order is prohibited.

B. Combined discharge greater than 167,000 gallons per hour (gph), as determined on an hourly basis, from Discharge Point Nos. 001 and 007 is prohibited.

C. Discharge from Discharge Point Nos. 002, 004, 005, and 006 is prohibited except as a result of precipitation or as necessary to discharge retained stormwater.

D. Discharge of kiln exhaust cooling water is prohibited.

IV. EFFLUENT LIMITATIONS AND DISCHARGE SPECIFICATIONS

A. Discharge Point Nos. 001 and 007

The Discharger shall comply with the following effluent limitations at Discharge Point Nos. 001 and 007, with compliance measured at Monitoring Locations EFF-001 and EFF-007 as described in the MRP.

Table 4. Effluent Limitations – Discharge Point Nos. 001 and 007

Parameter	Units	Average Monthly Effluent Limitation	Maximum Daily Effluent Limitation	Instantaneous Minimum Effluent Limitation	Instantaneous Maximum Effluent Limitation
Oil and Grease	mg/L	10	20	—	—
pH [1]	s.u.	—	—	6.5	8.5
Settleable Matter	mL/L-hr	0.10	0.20	—	—
Total Residual Chlorine	mg/L	—	—	—	0.0
Total Suspended Solids (TSS) [2]	lbs/d	—	58	—	—
Antimony	µg/L	6.0	12	—	—
Chromium (VI)	µg/L	6.0	16	—	—
Selenium	µg/L	3.7	8.2	—	—

Unit Abbreviations:

µg/L = micrograms per liter
mg/L = milligrams per liter
mL/L-hr = milliliters per liter-hour
lbs/d = pounds per day
s.u. = standard units

Footnotes:

[1] If the Discharger monitors pH continuously, pursuant to 40 C.F.R. § 401.17 the Discharger shall be in compliance with this pH limitation provided that both of the following conditions are satisfied: (i) the total time during which the pH is outside the

required range shall not exceed 7 hours and 26 minutes in any calendar month; and (ii) no individual excursion from the required pH range shall exceed 60 minutes

[2] Limit applies to the combined discharge from Discharge Point Nos. 001 and 007.

B. Discharge Point Nos. 002, 004, 005, and 006

The Discharger shall comply with the following effluent limitations at Discharge Point Nos. 002, 004, 005, and 006, with compliance measured at Monitoring Locations EFF-002, EFF-004, EFF-005, and EFF-006 as described in the MRP.

Table 5. Effluent Limitations – Discharge Point Nos. 002, 004, 005, and 006

Parameter	Units	Average Monthly Effluent Limitation	Maximum Daily Effluent Limitation	Instantaneous Minimum Effluent Limitation	Instantaneous Maximum Effluent Limitation
Oil and Grease	mg/L	10	20	—	—
pH	s.u.	—	—	6.5	8.5
Settleable Matter	mL/L-hr	0.10	0.20	—	—
TSS	mg/L	—	50	—	—

Unit Abbreviations:

mg/L = milligrams per liter
mL/L-hr = milliliters per liter-hour
s.u. = standard units

C. Acute Toxicity (Discharge Point Nos. 001 and 007)

Discharges at Discharge Point Nos. 001 and 007 shall comply with the following effluent limitations, with compliance measured at Monitoring Locations EFF-001 and EFF-007 as described in the MRP:

1. Three-sample median value of not less than 90 percent survival; and
2. Single-sample value of not less than 70 percent survival.

These acute toxicity limitations are defined as follows:

- **Three-sample median.** A bioassay test showing survival of less than 90 percent represents a violation of this effluent limit if one of the past two bioassay tests show less than 90 percent survival.

- **Single-sample maximum**. A bioassay test showing survival of less than 70 percent represents a violation of this effluent limit.

V. RECEIVING WATER LIMITATIONS

A. The discharge shall not cause the following conditions to exist in receiving waters at any place:

1. Floating material, including solids, liquids, foams, and scum, in concentrations that cause nuisance or adversely affect beneficial uses;

2. Alteration of suspended sediment in such a manner as to cause nuisance or adversely affect beneficial uses, or detrimental increase in the concentrations of toxic pollutants in sediments or aquatic life;

3. Suspended material in concentrations that cause nuisance or adversely affect beneficial uses;

4. Bottom deposits or aquatic growths to the extent that such deposits or growths cause nuisance or adversely affect beneficial uses;

5. Alteration of temperature beyond present natural background levels;

6. Changes in turbidity that cause nuisance or adversely affect beneficial uses, or increases from normal background light penetration or turbidity greater than 10 percent in areas where natural turbidity is greater than 50 nephelometric turbidity units;

7. Coloration that causes nuisance or adversely affects beneficial uses;

8. Visible, floating, suspended, or deposited oil or other products of petroleum origin; or

9. Toxic or other deleterious substances in concentrations or quantities that cause deleterious effects on wildlife, waterfowl, or other aquatic biota, or render any of these unfit for human consumption, either at levels created in the receiving waters or as a result of biological concentration.

B. The discharge shall not cause the following limits to be exceeded in receiving waters at any place within one foot of the water surface:

1.	Dissolved Oxygen (DO)	7.0 mg/L, minimum The median dissolved oxygen concentration for any three consecutive months shall not be less than 80% of the dissolved oxygen content at saturation. When natural factors cause concentrations less than that specified above, the discharge shall not cause further reduction in ambient dissolved oxygen concentrations.
2.	Dissolved Sulfide	Natural background levels
3.	pH	The pH shall not be depressed below 6.5 or raised above 8.5. The discharge shall not cause changes greater than 0.5 pH units in normal ambient pH levels.
4.	Nutrients	Waters shall not contain biostimulatory substances in concentrations that promote aquatic growths to the extent that such growths cause nuisance or adversely affect beneficial uses.

C. The discharge shall not cause or contribute to a violation of any water quality standard for receiving waters adopted by the Regional Water Board or the State Water Resources Control Board (State Water Board) as required by the CWA and regulations adopted thereunder. If more stringent water quality standards are promulgated or approved pursuant to CWA section 303, or amendments thereto, the Regional Water Board may revise or modify this Order in accordance with the more stringent standards.

VI. PROVISIONS

A. Standard Provisions

1. The Discharger shall comply with all "Standard Provisions" in Attachment D.

2. The Discharger shall comply with all applicable provisions of Attachment G (*Regional Standard Provisions, and Monitoring and Reporting Requirements for NPDES Wastewater Discharge Permits*).

3. For discharges from Discharge Point Nos. 002, 004, 005, and 006, the Discharger shall comply with all applicable provisions of Attachment S (*Stormwater Provisions, Monitoring, and Reporting Requirements*) as modified below. Specifically, Attachment S section I.G is replaced as follows:

   Action Levels and Advanced Best Management Practices (BMPs). If the Discharger samples any parameter in excess of an action level in Table A, the Discharger shall review the Stormwater Pollution Prevention Plan (SWPPP) to identify appropriate modifications to existing BMPs or additional BMPs as necessary to reduce pollutant discharge concentrations to levels below the action level. The Discharger shall revise the SWPPP accordingly before the next storm, if possible, or as soon as practical, and in no event later than three months following the exceedance.

Table A
Stormwater Action Levels

Parameter	Unit	Instantaneous Action Level	Annual Action Level [1]
Antimony	µg/L	640	—
Chromium (VI)	µg/L	16	—
Selenium	µg/L	—	5.0
Visible Oil	—	Presence	Presence
Visible Color	—	Presence	Presence

Footnote:
[1] Comparisons with Annual Action Levels shall be evaluated using data collected over each 12-month period from July 1 through the following June 30.

If, upon subsequent monitoring, the pollutants measured in Table A continue to exceed their respective action levels, the Discharger shall further evaluate its BMPs and update its SWPPP accordingly to include advanced BMPs in addition to the minimum BMPs described in Provision I.F, above. The Discharger shall, to the extent feasible, implement and maintain any advanced BMPs identified pursuant to Provision I.E.8, above, as necessary to reduce or prevent discharges of pollutants in stormwater discharges in a manner that reflects best industry practice considering technological availability and economic practicability and achievability. Advanced BMPs may include one or more of the following:

- **Exposure Minimization BMPs**. These include storm resistant shelters (either permanent or temporary) that prevent the contact of stormwater with identified industrial materials.
- **Stormwater Containment and Discharge Reduction BMPs.** These include BMPs that divert, infiltrate, reuse, contain, retain, or reduce the volume of stormwater runoff.
- **Treatment Control BMPs.** These include mechanical, chemical, biologic, or any other treatment technology that will meet the treatment design standard.

B. Monitoring and Reporting

The Discharger shall comply with the MRP (Attachment E), and future revisions thereto, and applicable sampling and reporting requirements in Attachments D and G.

C. Special Provisions

1. Reopener Provisions

The Regional Water Board may modify or reopen this Order prior to its expiration date in any of the following circumstances as allowed by law:

a. If present or future investigations demonstrate that the discharges governed by this Order have or will have a reasonable potential to cause or contribute to adverse impacts on water quality or beneficial uses of the receiving waters.

b. If new or revised water quality objectives or total maximum daily loads (TMDLs) come into effect for San Francisco Bay and contiguous water bodies (whether statewide, regional, or site-specific). In such cases, effluent limitations in this Order may be modified as necessary to reflect the updated water quality objectives and wasteload allocations in the TMDLs. Adoption of the effluent limitations in this Order is not intended to restrict in any way future modifications based on legally adopted water quality objectives or TMDLs or as otherwise permitted under federal regulations governing NPDES permit modifications.

c. If translator, dilution, or other water quality studies provide a basis for determining that a permit condition should be modified.

d. If State Water Board precedential decisions, new policies, new laws, or new regulations are adopted.

e. If an administrative or judicial decision on a separate NPDES permit or waste discharge requirements addresses requirements similar to this discharge.

f. If receiving water monitoring (i.e., new information) indicates that new or revised permit conditions are needed to resolve selenium impairment of Permanente Creek.

g. Or as otherwise authorized by law.

The Discharger may request a permit modification based on any of the circumstances above. With any such request, the Discharger shall include antidegradation and anti-backsliding analyses.

2. Effluent Characterization Study and Report

a. Study Elements. The Discharger shall characterize and evaluate the discharges from Discharge Point Nos. 001 and 007, as required by the MRP, to verify that the reasonable potential analysis conclusions of this Order remain valid and to inform the next permit reissuance.

The Discharger shall evaluate on an annual basis if concentrations of any of the priority pollutants listed in Attachment G, Table B, significantly increase over past performance. The Discharger shall investigate the cause of any such increase. The investigation may include, but need not be limited to, an increase in monitoring frequency, monitoring of process streams, and monitoring of influent sources. The Discharger shall establish remedial measures addressing any increase resulting in reasonable potential to cause or contribute to an excursion above applicable water quality criteria. This requirement may be satisfied by including the constituent in the Discharger's Pollutant Minimization Program, described in Provision VI.C.3.

b. Reporting Requirements

i. Routine Reporting. The Discharger shall report the identity of pollutants detected at or above applicable water quality criteria (see Fact Sheet Table F-6 for the criteria) in the transmittal letter for the self-monitoring report associated with the month in which samples were collected.

ii. Annual Reporting. The Discharger shall summarize the data evaluation and source investigation in the annual self-monitoring report.

3. Pollutant Minimization Program

a. The Discharger shall develop and conduct a Pollutant Minimization Program as further described below when there is evidence that a priority pollutant is present in the effluent above an effluent limitation (e.g., sample results reported as detected but not quantified [DNQ] when the effluent limitation is less than the method detection limit [MDL], sample results from analytical methods more sensitive than those methods required by this Order, presence of whole effluent toxicity, health advisories for fish consumption, or results of benthic or aquatic organism tissue sampling) and either:

i. A sample result is reported as DNQ and the effluent limitation is less than the Reporting Level (RL); or

ii. A sample result is reported as not detected (ND) and the effluent limitation is less than the MDL using definitions in Attachment A and reporting protocols described in the MRP.

b. If triggered by the reasons set forth in Provision VI.C.3.a, above, the Discharger's Pollutant Minimization Program shall include, but not be limited to, the following actions and submittals:

i. Annual review and semi-annual monitoring of potential sources of the reportable priority pollutants, which may include fish tissue monitoring and other bio-uptake sampling, or alternative measures when source monitoring is unlikely to produce useful analytical data;

ii. Quarterly monitoring for the reportable priority pollutants in the influent to the Facility. The Executive Officer may approve alternative measures when influent monitoring is unlikely to produce useful analytical data;

iii. Submittal of a control strategy designed to proceed toward the goal of maintaining concentrations of the reportable priority pollutants in the effluent at or below the effluent limitation; and

iv. Implementation of appropriate cost-effective control measures for the reportable priority pollutants, consistent with the control strategy.

4. Receiving Water Data Reporting

The Discharger shall submit receiving water data for the following parameters collected at the following monitoring locations to the California Environmental Data Exchange Network (CEDEN) to the extent that CEDEN accommodates the data type:

- *Monitoring Location RSW-001*: selenium, pH, temperature, DO, electrical conductivity (EC), turbidity, TSS, chloride, sulfate, trace metals (antimony, arsenic cadmium, total chromium, chromium [VI], copper, molybdenum, nickel, thallium, vanadium, and zinc), and chronic toxicity.
- *Monitoring Location RSW-004*: selenium, pH, temperature, DO, EC, turbidity. Parameters monitored quarterly with chronic toxicity: total hardness, TSS, chloride, sulfate, trace metals (antimony, arsenic cadmium, total chromium, chromium [VI], copper, molybdenum, nickel, thallium, vanadium, and zinc), and chronic toxicity.
- *Monitoring Location RSW-005*: selenium, pH, temperature, DO, EC, turbidity. Parameters monitored quarterly with chronic toxicity: total hardness, TSS, chloride, sulfate, trace metals (antimony, arsenic cadmium, total chromium, chromium [VI], copper, molybdenum, nickel, thallium, vanadium, and zinc), and chronic toxicity.
- *Monitoring Location RSW-006*: selenium, pH, temperature, DO, EC, and turbidity.
- *Monitoring Location RSW-007*: selenium, pH, temperature, DO, EC, and turbidity.

Data and results shall be submitted annually by March 1.

5. Dry Season Discharge Requirements

When discharging treated quarry water, as necessary, during each dry season (May 1 through October 31), the Discharger shall discharge at least 450 gallons per minute from the

FTS-Upper (Discharge Point No. 001) before discharging any additional flow from the FTS-Lower (Discharge Point No. 007).

6. Selenium in Fish Tissue Reasonable Potential Study

The Discharger shall submit a study plan and schedule to evaluate reasonable potential for selenium using U.S. EPA's proposed California fish tissue selenium criterion (fish tissue criterion).[1] The objectives of the study shall be as follows:

- Determine if the Discharger can collect sufficient representative fish tissue data from Permanente Creek to evaluate reasonable potential using U.S. EPA's proposed fish tissue criterion;
- If the Discharger cannot collect such fish tissue data, determine if the Discharger can collect and use an alternative form of data;
- Collect sufficient representative fish tissue data, or an alternative form of data if necessary, from Permanente Creek to evaluate reasonable potential using U.S. EPA's proposed fish tissue criterion; and
- Recommend a reasonable potential finding based on the above with the application for permit reissuance.

The study plan and schedule shall include the following:

a. By November 30, 2019, the Discharger shall submit a study plan and schedule for implementation. The study plan shall provide for the following:

- Initial data-collection and evaluation;
- Interim report;
- Follow-up data collection and analysis; and
- Final report.

The study plan and schedule shall be acceptable to the Executive Officer, who will confirm that the study plan meets these conditions and fulfills the objectives set forth above.

b. Unless the Executive Officer objects to the study plan and proposes changes necessary to meet the conditions in section VI.6.a., above, by December 30, 2019, the Discharger shall begin implementing the study plan and schedule.

c. By the date set forth in the study plan and schedule, the Discharger shall submit an interim report that:

i. Determines if the Discharger can collect sufficient representative fish tissue data from Permanente Creek to evaluate reasonable potential for selenium to exceed the proposed fish tissue criterion; and

ii. Provides a plan and schedule for collecting representative fish tissue data from Permanente Creek and conducting a reasonable potential analysis, or, if such fish tissue data are unavailable, for collecting an alternative form of data and conducting a

[1] Water Quality Standards; Establishment of a Numeric Criterion for Selenium for the State of California, Fed. Reg. Vol. 83, No. 239, December 13, 2018, pages 64059-64078

reasonable potential analysis (e.g., using the U.S. EPA Mechanistic Modeling Approach [U.S. EPA, August 8, 2018, Draft]).

Fish tissue monitoring shall conform to U.S. EPA guidance.[2] The interim report and schedule shall be acceptable to the Executive Officer, who will confirm that they meet the conditions set forth in items i and ii above.

d. Unless the Executive Officer objects to the interim report and proposes changes necessary to meet the conditions in section VI.6.c, above, by the date set forth in the interim report and schedule, the Discharger shall begin implementing the interim report plan and schedule.

e. With the Report of Waste Discharge required in Table 3 of this Order, the Discharger shall provide a final report that includes the results of the sampling effort, a recommended finding regarding reasonable potential, and all supporting data and analysis.

Subsequent revisions to U.S. EPA criteria and guidance cited above shall be incorporated into all data collection and analysis, and into the interim and final reports to the extent possible.

[2] Technical Support for Fish Tissue Monitoring for Implementation of EPA's 2016 Selenium Criterion (U.S. EPA, EPA 820-F-16-007, September 2016, Draft)

ATTACHMENT A – DEFINITIONS

Arithmetic Mean (μ)
Also called the average, the sum of measured values divided by the number of samples. For ambient water concentrations, the arithmetic mean is calculated as follows:

Arithmetic mean = $\mu = \Sigma x / n$ where: Σx is the sum of the measured ambient water concentrations, and n is the number of samples.

Average Monthly Effluent Limitation (AMEL)
The highest allowable average of daily discharges over a calendar month, calculated as the sum of all daily discharges measured during a calendar month divided by the number of daily discharges measured during that month.

Average Weekly Effluent Limitation (AWEL)
The highest allowable average of daily discharges over a calendar week (Sunday through Saturday), calculated as the sum of all daily discharges measured during a calendar week divided by the number of daily discharges measured during that week.

Bioaccumulative
Taken up by an organism from its surrounding medium through gill membranes, epithelial tissue, or from food and subsequently concentrated and retained in the body of the organism.

Carcinogenic
Known to cause cancer in living organisms.

Coefficient of Variation
Measure of data variability calculated as the estimated standard deviation divided by the arithmetic mean of the observed values.

Daily Discharge
Either: (1) the total mass of the constituent discharged over the calendar day (12:00 am through 11:59 pm) or any 24-hour period that reasonably represents a calendar day for purposes of sampling (as specified in the permit) for a constituent with limitations expressed in units of mass; or (2) the unweighted arithmetic mean measurement of the constituent over the day for a constituent with limitations expressed in other units of measurement (e.g., concentration).

The daily discharge may be determined by the analytical results of a composite sample taken over the course of one day (a calendar day or other 24-hour period defined as a day) or by the arithmetic mean of analytical results from one or more grab samples taken over the course of the day.

For composite sampling, if 1 day is defined as a 24-hour period other than a calendar day, the analytical result for the 24-hour period is considered the result for the calendar day in which the 24-hour period ends.

Detected, but Not Quantified (DNQ)
Sample result less than the RL, but greater than or equal to the laboratory's MDL. Sample results reported as DNQ are estimated concentrations.

Dilution Credit
Amount of dilution granted to a discharge in the calculation of a water quality-based effluent limitation, based on the allowance of a specified mixing zone. It is calculated from the dilution ratio or determined by conducting a mixing zone study or modeling the discharge and receiving water.

Effluent Concentration Allowance (ECA)
Value derived from the water quality criterion/objective, dilution credit, and ambient background concentration that is used, in conjunction with the CV for the effluent monitoring data, to calculate a long-term average (LTA) discharge concentration. The ECA has the same meaning as wasteload allocation (WLA) as used in U.S. EPA guidance (*Technical Support Document for Water Quality-based Toxics Control*, March 1991, second printing, EPA/505/2-90-001).

Enclosed Bay
Indentation along the coast that encloses an area of oceanic water within a distinct headlands or harbor works. Enclosed bays include all bays where the narrowest distance between the headlands or outermost harbor works is less than 75 percent of the greatest dimension of the enclosed portion of the bay. Enclosed bays include, but are not limited to, Humboldt Bay, Bodega Harbor, Tomales Bay, Drake's Estero, San Francisco Bay, Morro Bay, Los Angeles-Long Beach Harbor, Upper and Lower Newport Bay, Mission Bay, and San Diego Bay. Enclosed bays do not include inland surface waters or ocean waters.

Estimated Chemical Concentration
Concentration that results from the confirmed detection of the substance below the ML value by the analytical method.

Estuaries
Waters, including coastal lagoons, located at the mouths of streams that serve as areas of mixing for fresh and ocean waters. Coastal lagoons and mouths of streams that are temporarily separated from the ocean by sandbars are considered estuaries. Estuarine waters are considered to extend from a bay or the open ocean to a point upstream where there is no significant mixing of fresh water and seawater. Estuarine waters include, but are not limited to, the Sacramento-San Joaquin Delta, as defined in Water Code section 12220, Suisun Bay, Carquinez Strait downstream to the Carquinez Bridge, and appropriate areas of the Smith, Mad, Eel, Noyo, Russian, Klamath, San Diego, and Otay rivers. Estuaries do not include inland surface waters or ocean waters.

Inland Surface Waters
All surface waters of the state that do not include the ocean, enclosed bays, or estuaries.

Instantaneous Maximum Effluent Limitation
Highest allowable value for any single grab sample or aliquot (i.e., each grab sample or aliquot is independently compared to the instantaneous maximum limitation).

Instantaneous Minimum Effluent Limitation
Lowest allowable value for any single grab sample or aliquot (i.e., each grab sample or aliquot is independently compared to the instantaneous minimum limitation).

Maximum Daily Effluent Limitation (MDEL)
Highest allowable daily discharge of a pollutant, over a calendar day (or 24-hour period). For pollutants with limitations expressed in units of mass, the daily discharge is calculated as the total mass of the pollutant discharged over the day. For pollutants with limitations expressed in other units of measurement, the daily discharge is calculated as the arithmetic mean measurement of the pollutant over the day.

Median
Middle measurement in a set of data. The median of a set of data is found by first arranging the measurements in order of magnitude (either increasing or decreasing order). If the number of measurements (n) is odd, then the median = $X_{(n+1)/2}$. If n is even, then the median = $(X_{n/2} + X_{(n/2)+1})/2$ (i.e., the midpoint between n/2 and n/2+1).

Method Detection Limit (MDL)
Minimum concentration of a substance that can be reported with 99 percent confidence that the measured concentration is distinguishable from method blank results, as defined in in 40 C.F.R. part 136, Appendix B.

Minimum Level (ML)
Concentration at which the entire analytical system gives a recognizable signal and acceptable calibration point. The ML is the concentration in a sample that is equivalent to the concentration of the lowest calibration standard analyzed by a specific analytical procedure, assuming that all the method specified sample weights, volumes, and processing steps have been followed.

Mixing Zone
Limited volume of receiving water allocated for mixing with a wastewater discharge where water quality criteria can be exceeded without causing adverse effects to the overall water body.

Not Detected (ND)
Sample results less than the laboratory's MDL.

Persistent Pollutants
Substances for which degradation or decomposition in the environment is nonexistent or very slow.

Pollutant Minimization Program
Program of waste minimization and pollution prevention actions that include, but are not limited to, product substitution, waste stream recycling, alternative waste management methods, and education of the public and businesses. The goal of the Pollutant Minimization Program is to reduce all potential sources of a priority pollutant through pollutant minimization (control) strategies, including pollution prevention measures as appropriate, to maintain the effluent concentration at or below the water quality-based effluent limitation. Pollution prevention measures may be particularly appropriate for persistent bioaccumulative priority pollutants where there is evidence that beneficial uses are being impacted. Cost effectiveness may be considered when establishing the requirements of a Pollutant Minimization Program. The completion and implementation of a Pollution Prevention Plan, if required pursuant to Water Code section 13263.3(d), is considered to fulfill Pollutant Minimization Program requirements.

Pollution Prevention
Any action that causes a net reduction in the use or generation of a hazardous substance or other pollutant that is discharged into water and includes, but is not limited to, input change, operational improvement, production process change, and product reformulation (as defined in Water Code section 13263.3). Pollution prevention does not include actions that merely shift a pollutant in wastewater from one environmental medium to another environmental medium, unless clear environmental benefits of such an approach are identified to the satisfaction of the State Water Board or Regional Water Board.

Reporting Level (RL)
ML (and its associated analytical method) chosen by the Discharger for reporting and compliance determination from the MLs included in this Order, including an additional factor if applicable as discussed herein. The MLs included in this Order correspond to approved analytical methods for reporting a sample result that are selected by the Regional Water Board either from SIP Appendix 4 in accordance with SIP section 2.4.2 or established in accordance with SIP section 2.4.3. The ML is based on the proper application of method-based analytical procedures for sample preparation and the absence of any matrix interferences. Other factors may be applied to the ML depending on the specific sample preparation steps employed. For example, the treatment typically applied in cases where there are matrix-effects is to dilute the sample or sample aliquot by a factor of ten. In such cases, this additional factor must be applied to the ML in the computation of the RL.

Source of Drinking Water
Any water designated as having a municipal or domestic supply (MUN) beneficial use.

Standard Deviation (σ)
Measure of variability calculated as follows:

$$\sigma = (\sum[(x - \mu)^2]/(n - 1))^{0.5}$$

where:

x is the observed value;
μ is the arithmetic mean of the observed values; and
n is the number of samples.

Toxicity Reduction Evaluation (TRE)
Study conducted in a step-wise process designed to identify the causative agents of effluent or ambient toxicity, isolate the sources of toxicity, evaluate the effectiveness of toxicity control options, and then confirm the reduction in toxicity. The first steps of the TRE consist of the collection of data relevant to the toxicity, including additional toxicity testing, and an evaluation of facility operations and maintenance practices, and best management practices. A Toxicity Identification Evaluation (TIE) may be required as part of the TRE, if appropriate. A TIE is a set of procedures to identify the specific chemicals responsible for toxicity. These procedures are performed in three phases (characterization, identification, and confirmation) using aquatic organism toxicity tests.

ATTACHMENT B – FACILITY MAPS

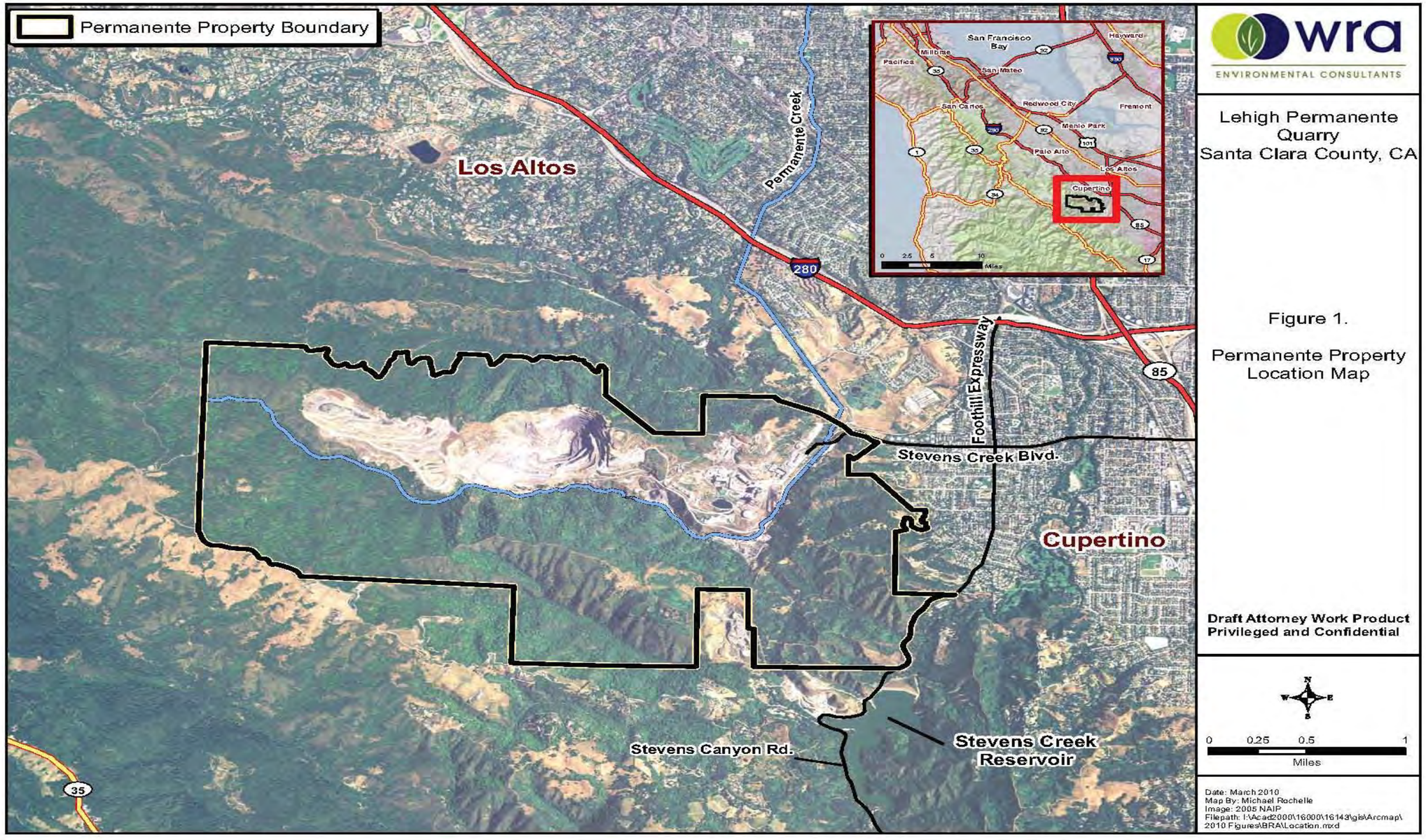

LEGEND

- Stormwater Conveyance Infrastructure
- Fresh Water Conveyance Infrastructure
- Sewage Water Conveyance Infrastructure

NOTES

Conveyance infrastructure locations are Approximate.

Lehigh Southwest Cement Company
Permanente Quarry

WATER SYSTEM AND PIPING

ATTACHMENT C – PROCESS FLOW DIAGRAM

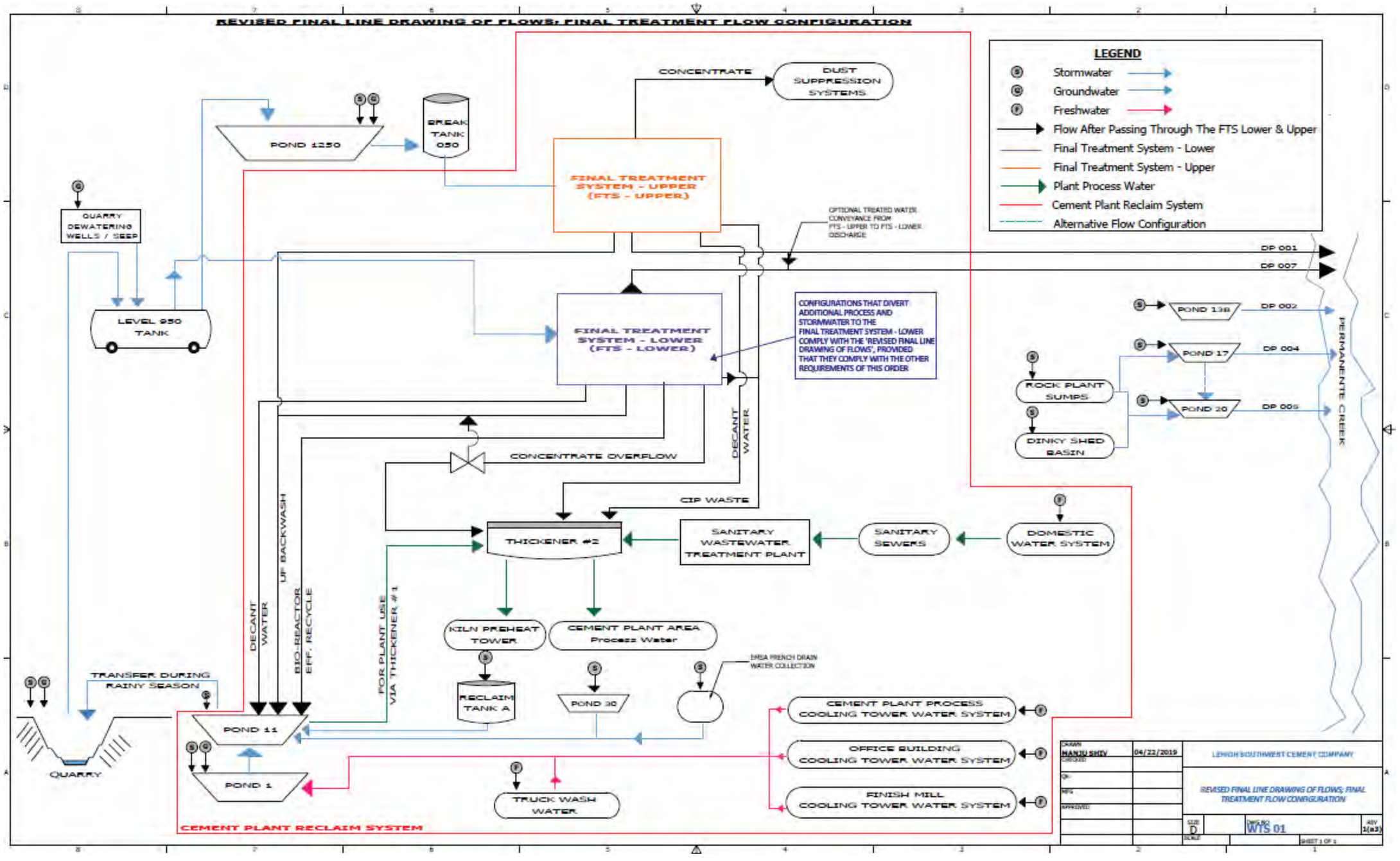

ATTACHMENT D –STANDARD PROVISIONS

I. STANDARD PROVISIONS—PERMIT COMPLIANCE

A. Duty to Comply

1. The Discharger must comply with all of the terms, requirements, and conditions of this Order. Any noncompliance constitutes a violation of the Clean Water Act (CWA) and the California Water Code and is grounds for enforcement action; for permit termination, revocation and reissuance, or modification; or denial of a permit renewal application; or a combination thereof. (40 C.F.R. § 122.41(a); Wat. Code §§ 13261, 13263, 13265, 13268, 13000, 13001, 13304, 13350, 13385.)

2. The Discharger shall comply with effluent standards or prohibitions established under CWA section 307(a) for toxic pollutants within the time provided in the regulations that establish these standards or prohibitions, even if this Order has not yet been modified to incorporate the requirement. (40 C.F.R. § 122.41(a)(1).)

B. Need to Halt or Reduce Activity Not a Defense

It shall not be a defense for a Discharger in an enforcement action that it would have been necessary to halt or reduce the permitted activity in order to maintain compliance with the conditions of this Order. (40 C.F.R. § 122.41(c).)

C. Duty to Mitigate

The Discharger shall take all reasonable steps to minimize or prevent any discharge in violation of this Order that has a reasonable likelihood of adversely affecting human health or the environment. (40 C.F.R. § 122.41(d).)

D. Proper Operation and Maintenance

The Discharger shall at all times properly operate and maintain all facilities and systems of treatment and control (and related appurtenances) which are installed or used by the Discharger to achieve compliance with the conditions of this Order. Proper operation and maintenance also includes adequate laboratory controls and appropriate quality assurance procedures. This provision requires the operation of backup or auxiliary facilities or similar systems that are installed by a Discharger only when necessary to achieve compliance with the conditions of this Order. (40 C.F.R. § 122.41(e).)

E. Property Rights

1. This Order does not convey any property rights of any sort or any exclusive privileges. (40 C.F.R. § 122.41(g).)

2. The issuance of this Order does not authorize any injury to persons or property or invasion of other private rights, or any infringement of state or local law or regulations. (40 C.F.R. § 122.5(c).)

F. Inspection and Entry

The Discharger shall allow the Regional Water Board, State Water Board, U.S. EPA, or their authorized representatives (including an authorized contractor acting as their representative), upon the presentation of credentials and other documents, as may be required by law, to (33 U.S.C. § 1318(a)(4)(B); 40 C.F.R. § 122.41(i); Wat. Code, §§ 13267, 13383):

1. Enter upon the Discharger's premises where a regulated facility or activity is located or conducted, or where records are kept under the conditions of this Order (33 U.S.C. § 1318(a)(4)(B)(i); 40 C.F.R. § 122.41(i)(1); Wat. Code, §§ 13267, 13383);

2. Have access to and copy, at reasonable times, any records that must be kept under the conditions of this Order (33 U.S.C. § 1318(a)(4)(B)(ii); 40 C.F.R. § 122.41(i)(2); Wat. Code, §§ 13267, 13383);

3. Inspect and photograph, at reasonable times, any facilities, equipment (including monitoring and control equipment), practices, or operations regulated or required under this Order (33 U.S.C. § 1318(a)(4)(B)(ii); 40 C.F.R. § 122.41(i)(3); Wat. Code, §§ 13267, 13383); and

4. Sample or monitor, at reasonable times, for the purposes of assuring Order compliance or as otherwise authorized by the CWA or the Water Code, any substances or parameters at any location. (33 U.S.C. § 1318(a)(4)(B); 40 C.F.R. § 122.41(i)(4); Wat. Code, §§ 13267, 13383.)

G. Bypass

1. Definitions

a. "Bypass" means the intentional diversion of waste streams from any portion of a treatment facility. (40 C.F.R. § 122.41(m)(1)(i).)

b. "Severe property damage" means substantial physical damage to property, damage to the treatment facilities, which causes them to become inoperable, or substantial and permanent loss of natural resources that can reasonably be expected to occur in the absence of a bypass. Severe property damage does not mean economic loss caused by delays in production. (40 C.F.R. § 122.41(m)(1)(ii).)

2. Bypass not exceeding limitations. The Discharger may allow any bypass to occur which does not cause exceedances of effluent limitations, but only if it is for essential maintenance to assure efficient operation. These bypasses are not subject to the provisions listed in Standard Provisions – Permit Compliance I.G.3, I.G.4, and I.G.5 below. (40 C.F.R. § 122.41(m)(2).)

3. Prohibition of bypass. Bypass is prohibited, and the Regional Water Board may take enforcement action against a Discharger for bypass, unless (40 C.F.R. § 122.41(m)(4)(i)):

a. Bypass was unavoidable to prevent loss of life, personal injury, or severe property damage (40 C.F.R. § 122.41(m)(4)(i)(A));

b. There were no feasible alternatives to the bypass, such as the use of auxiliary treatment facilities, retention of untreated wastes, or maintenance during normal periods of

equipment downtime. This condition is not satisfied if adequate back-up equipment should have been installed in the exercise of reasonable engineering judgment to prevent a bypass that occurred during normal periods of equipment downtime or preventive maintenance (40 C.F.R. § 122.41(m)(4)(i)(B)); and

c. The Discharger submitted notice to the Regional Water Board as required under Standard Provisions – Permit Compliance I.G.5 below. (40 C.F.R. § 122.41(m)(4)(i)(C).)

4. Approval. The Regional Water Board may approve an anticipated bypass, after considering its adverse effects, if the Regional Water Board determines that it will meet the three conditions listed in Standard Provisions—Permit Compliance I.G.3 above. (40 C.F.R. § 122.41(m)(4)(ii).)

5. Notice

a. Anticipated bypass. If the Discharger knows in advance of the need for a bypass, it shall submit prior notice, if possible at least 10 days before the date of the bypass. The notice shall be sent to the Regional Water Board. As of December 21, 2020, a notice shall also be submitted electronically to the initial recipient defined in Standard Provisions – Reporting V.J below. Notices shall comply with 40 C.F.R. part 3, 40 C.F.R. section 122.22, and 40 C.F.R. part 127. (40 C.F.R. § 122.41(m)(3)(i).)

b. Unanticipated bypass. The Discharger shall submit a notice of an unanticipated bypass as required in Standard Provisions - Reporting V.E below (24-hour notice). The notice shall be sent to the Regional Water Board. As of December 21, 2020, a notice shall also be submitted electronically to the initial recipient defined in Standard Provisions – Reporting V.J below. Notices shall comply with 40 C.F.R. part 3, 40 C.F.R. section 122.22, and 40 C.F.R. part 127. (40 C.F.R. § 122.41(m)(3)(ii).)

H. Upset

Upset means an exceptional incident in which there is unintentional and temporary noncompliance with technology based permit effluent limitations because of factors beyond the reasonable control of the Discharger. An upset does not include noncompliance to the extent caused by operational error, improperly designed treatment facilities, inadequate treatment facilities, lack of preventive maintenance, or careless or improper operation. (40 C.F.R. § 122.41(n)(1).)

1. Effect of an upset. An upset constitutes an affirmative defense to an action brought for noncompliance with such technology based permit effluent limitations if the requirements of Standard Provisions – Permit Compliance I.H.2 below are met. No determination made during administrative review of claims that noncompliance was caused by upset, and before an action for noncompliance, is final administrative action subject to judicial review. (40 C.F.R. § 122.41(n)(2).)

2. Conditions necessary for a demonstration of upset. A discharger who wishes to establish the affirmative defense of upset shall demonstrate, through properly signed, contemporaneous operating logs or other relevant evidence that (40 C.F.R. § 122.41(n)(3)):

a. An upset occurred and that the Discharger can identify the cause(s) of the upset (40 C.F.R. § 122.41(n)(3)(i));

b. The permitted facility was, at the time, being properly operated (40 C.F.R. § 122.41(n)(3)(ii));

c. The Discharger submitted notice of the upset as required in Standard Provisions—Reporting V.E.2.b below (24-hour notice) (40 C.F.R. § 122.41(n)(3)(iii)); and

d. The Discharger complied with any remedial measures required under Standard Provisions—Permit Compliance I.C above. (40 C.F.R. § 122.41(n)(3)(iv).)

3. Burden of proof. In any enforcement proceeding, the Discharger seeking to establish the occurrence of an upset has the burden of proof. (40 C.F.R. § 122.41(n)(4).)

II. STANDARD PROVISIONS—PERMIT ACTION

A. General

This Order may be modified, revoked and reissued, or terminated for cause. The filing of a request by the Discharger for modification, revocation and reissuance, or termination, or a notification of planned changes or anticipated noncompliance does not stay any Order condition. (40 C.F.R. § 122.41(f).)

B. Duty to Reapply

If the Discharger wishes to continue an activity regulated by this Order after the expiration date of this Order, the Discharger must apply for and obtain a new permit. (40 C.F.R. § 122.41(b).)

C. Transfers

This Order is not transferable to any person except after notice to the Regional Water Board. The Regional Water Board may require modification or revocation and reissuance of this Order to change the name of the Discharger and incorporate such other requirements as may be necessary under the CWA and the Water Code. (40 C.F.R. §§ 122.41(l)(3), 122.61.)

III. STANDARD PROVISIONS—MONITORING

A. Samples and measurements taken for the purpose of monitoring shall be representative of the monitored activity. (40 C.F.R. § 122.41(j)(1).)

B. Monitoring must be conducted according to test procedures approved under 40 C.F.R. part 136 for the analyses of pollutants unless another method is required under 40 C.F.R. chapter 1, subchapter N. Monitoring must be conducted according to sufficiently sensitive test methods approved under 40 C.F.R. part 136 for the analysis of pollutants or pollutant parameters or required under 40 C.F.R. chapter 1, subchapter N. For the purposes of this paragraph, a method is sufficiently sensitive when:

1. The method minimum level (ML) is at or below the level of the effluent limitation established in the permit for the measured pollutant or pollutant parameter, and either (a) the method ML is at or below the level of the applicable water quality criterion for the measured pollutant or pollutant parameter, or (b) the method ML is above the applicable water quality criterion but the amount of the pollutant or pollutant parameter in a facility's discharge is

high enough that the method detects and quantifies the level of the pollutant or pollutant parameter in the discharge; or

2. The method has the lowest ML of the analytical methods approved under 40 C.F.R. part 136 or required under 40 C.F.R. chapter 1, subchapter N, for the measured pollutant or pollutant parameter.

In the case of pollutants or pollutant parameters for which there are no approved methods under 40 C.F.R. part 136 or otherwise required under 40 C.F.R. chapter 1, subchapter N, monitoring must be conducted according to a test procedure specified in this Order for such pollutants or pollutant parameters. (40 C.F.R. §§ 122.21(e)(3), 122.41(j)(4), 122.44(i)(1)(iv).)

IV. STANDARD PROVISIONS—RECORDS

A. The Discharger shall retain records of all monitoring information, including all calibration and maintenance records and all original strip chart recordings for continuous monitoring instrumentation, copies of all reports required by this Order, and records of all data used to complete the application for this Order, for a period of at least three (3) years from the date of the sample, measurement, report or application. This period may be extended by request of the Regional Water Board Executive Officer at any time. (40 C.F.R. § 122.41(j)(2).)

B. Records of monitoring information shall include the following:

1. The date, exact place, and time of sampling or measurements (40 C.F.R. § 122.41(j)(3)(i));

2. The individual(s) who performed the sampling or measurements (40 C.F.R. § 122.41(j)(3)(ii));

3. The date(s) the analyses were performed (40 C.F.R. § 122.41(j)(3)(iii));

4. The individual(s) who performed the analyses (40 C.F.R. § 122.41(j)(3)(iv));

5. The analytical techniques or methods used (40 C.F.R. § 122.41(j)(3)(v)); and

6. The results of such analyses. (40 C.F.R. § 122.41(j)(3)(vi).)

C. Claims of confidentiality for the following information will be denied (40 C.F.R. § 122.7(b)):

1. The name and address of any permit applicant or Discharger (40 C.F.R. § 122.7(b)(1)); and

2. Permit applications and attachments, permits, and effluent data. (40 C.F.R. § 122.7(b)(2).)

V. STANDARD PROVISIONS—REPORTING

A. Duty to Provide Information

The Discharger shall furnish to the Regional Water Board, State Water Board, or U.S. EPA within a reasonable time, any information which the Regional Water Board, State Water Board, or U.S. EPA may request to determine whether cause exists for modifying, revoking and reissuing, or terminating this Order or to determine compliance with this Order. Upon request, the Discharger

shall also furnish to the Regional Water Board, State Water Board, or U.S. EPA copies of records required to be kept by this Order. (40 C.F.R. § 122.41(h); Wat. Code, §§ 13267, 13383.)

B. Signatory and Certification Requirements

1. All applications, reports, or information submitted to the Regional Water Board, State Water Board, and/or U.S. EPA shall be signed and certified in accordance with Standard Provisions—Reporting V.B.2, V.B.3, V.B.4, V.B.5, and V.B.6 below. (40 C.F.R. § 122.41(k).)

2. For a corporation, all permit applications shall be signed by a responsible corporate officer. For the purpose of this section, a responsible corporate officer means: (i) a president, secretary, treasurer, or vice-president of the corporation in charge of a principal business function, or any other person who performs similar policy- or decision-making functions for the corporation, or (ii) the manager of one or more manufacturing, production, or operating facilities, provided, the manager is authorized to make management decisions which govern the operation of the regulated facility including having the explicit or implicit duty of making major capital investment recommendations, and initiating and directing other comprehensive measures to assure long term environmental compliance with environmental laws and regulations; the manager can ensure that the necessary systems are established or actions taken to gather complete and accurate information for permit application requirements; and where authority to sign documents has been assigned or delegated to the manager in accordance with corporate procedures. (40 C.F.R. § 122.22(a)(1).)

For a partnership or sole proprietorship, all permit applications shall be signed by a general partner or the proprietor, respectively. (40 C.F.R. § 122.22(a)(2).)

For a municipality, State, federal, or other public agency, all permit applications shall be signed by either a principal executive officer or ranking elected official. For purposes of this provision, a principal executive officer of a federal agency includes (i) the chief executive officer of the agency, or (ii) a senior executive officer having responsibility for the overall operations of a principal geographic unit of the agency (e.g., Regional Administrators of U.S. EPA). (40 C.F.R. § 122.22(a)(3).).

3. All reports required by this Order and other information requested by the Regional Water Board, State Water Board, or U.S. EPA shall be signed by a person described in Standard Provisions – Reporting V.B.2 above, or by a duly authorized representative of that person. A person is a duly authorized representative only if:

a. The authorization is made in writing by a person described in Standard Provisions—Reporting V.B.2 above (40 C.F.R. § 122.22(b)(1));

b. The authorization specifies either an individual or a position having responsibility for the overall operation of the regulated facility or activity such as the position of plant manager, operator of a well or a well field, superintendent, position of equivalent responsibility, or an individual or position having overall responsibility for environmental matters for the company. (A duly authorized representative may thus be either a named individual or any individual occupying a named position.) (40 C.F.R. § 122.22(b)(2)); and

c. The written authorization is submitted to the Regional Water Board and State Water Board. (40 C.F.R. § 122.22(b)(3).)

4. If an authorization under Standard Provisions – Reporting V.B.3 above is no longer accurate because a different individual or position has responsibility for the overall operation of the facility, a new authorization satisfying the requirements of Standard Provisions—Reporting V.B.3 above must be submitted to the Regional Water Board and State Water Board prior to or together with any reports, information, or applications, to be signed by an authorized representative. (40 C.F.R. § 122.22(c).)

5. Any person signing a document under Standard Provisions—Reporting V.B.2 or V.B.3 above shall make the following certification:

> "I certify under penalty of law that this document and all attachments were prepared under my direction or supervision in accordance with a system designed to assure that qualified personnel properly gather and evaluate the information submitted. Based on my inquiry of the person or persons who manage the system or those persons directly responsible for gathering the information, the information submitted is, to the best of my knowledge and belief, true, accurate, and complete. I am aware that there are significant penalties for submitting false information, including the possibility of fine and imprisonment for knowing violations." (40 C.F.R. § 122.22(d).)

6. Any person providing the electronic signature for documents described in Standard Provisions – V.B.1, V.B.2, or V.B.3 that are submitted electronically shall meet all relevant requirements of Standard Provisions – Reporting V.B, and shall ensure that all relevant requirements of 40 C.F.R. part 3 (Cross-Media Electronic Reporting) and 40 C.F.R. part 127 (NPDES Electronic Reporting Requirements) are met for that submission. (40 C.F.R § 122.22(e).)

C. Monitoring Reports

1. Monitoring results shall be reported at the intervals specified in the Monitoring and Reporting Program in this Order. (40 C.F.R. § 122.22(l)(4).)

2. Monitoring results must be reported on a Discharge Monitoring Report (DMR) form or forms provided or specified by the Regional Water Board or State Water Board. As of December 21, 2016, all reports and forms must be submitted electronically to the initial recipient defined in Standard Provisions – Reporting V.J and comply with 40 C.F.R. part 3, 40 C.F.R. section 122.22, and 40 C.F.R. part 127. (40 C.F.R. § 122.41(l)(4)(i).)

3. If the Discharger monitors any pollutant more frequently than required by this Order using test procedures approved under 40 C.F.R. part 136, or another method required for an industry-specific waste stream under 40 C.F.R. chapter 1, subchapter N, the results of such monitoring shall be included in the calculation and reporting of the data submitted in the DMR reporting form specified by the Regional Water Board or State Water Board. (40 C.F.R. § 122.41(l)(4)(ii).)

4. Calculations for all limitations, which require averaging of measurements, shall utilize an arithmetic mean unless otherwise specified in this Order. (40 C.F.R. § 122.41(l)(4)(iii).)

D. Compliance Schedules

Reports of compliance or noncompliance with, or any progress reports on, interim and final requirements contained in any compliance schedule of this Order, shall be submitted no later than 14 days following each schedule date. (40 C.F.R. § 122.41(l)(5).)

E. Twenty-Four Hour Reporting

1. The Discharger shall report any noncompliance that may endanger health or the environment. Any information shall be provided orally within 24 hours from the time the Discharger becomes aware of the circumstances. A written report shall also be provided within five (5) days of the time the Discharger becomes aware of the circumstances. The report shall contain a description of the noncompliance and its cause; the period of noncompliance, including exact dates and times, and if the noncompliance has not been corrected, the anticipated time it is expected to continue; and steps taken or planned to reduce, eliminate, and prevent reoccurrence of the noncompliance.

For noncompliance related to combined sewer overflows, sanitary sewer overflows, or bypass events, these reports must include the data described above (with the exception of time of discovery) as well as the type of event (i.e., combined sewer overflow, sanitary sewer overflow, or bypass event), type of overflow structure (e.g., manhole, combined sewer overflow outfall), discharge volume untreated by the treatment works treating domestic sewage, types of human health and environmental impacts of the event, and whether the noncompliance was related to wet weather.

As of December 21, 2020, all reports related to combined sewer overflows, sanitary sewer overflows, or bypass events must be submitted to the Regional Water Board and must be submitted electronically to the initial recipient defined in Standard Provisions – Reporting V.J. The reports shall comply with 40 C.F.R. part 3, 40 C.F.R. section 122.22, and 40 C.F.R. part 127. The Regional Water Board may also require the Discharger to electronically submit reports not related to combined sewer overflows, sanitary sewer overflows, or bypass events under this section. (40 C.F.R. § 122.41(l)(6)(i).)

2. The following shall be included as information that must be reported within 24 hours:

a. Any unanticipated bypass that exceeds any effluent limitation in this Order. (40 C.F.R. § 122.41(l)(6)(ii)(A).)

b. Any upset that exceeds any effluent limitation in this Order. (40 C.F.R. § 122.41(l)(6)(ii)(B).)

3. The Regional Water Board may waive the above-required written report under this provision on a case-by-case basis if an oral report has been received within 24 hours. (40 C.F.R. § 122.41(l)(6)(iii).)

F. Planned Changes

The Discharger shall give notice to the Regional Water Board as soon as possible of any planned physical alterations or additions to the permitted facility. Notice is required under this provision only when (40 C.F.R. § 122.41(l)(1)):

1. The alteration or addition to a permitted facility may meet one of the criteria for determining whether a facility is a new source in 40 C.F.R. section 122.29(b) (40 C.F.R. § 122.41(l)(1)(i)); or

2. The alteration or addition could significantly change the nature or increase the quantity of pollutants discharged. This notification applies to pollutants that are not subject to effluent limitations in this Order. (Alternatively, for an existing manufacturing, commercial, mining, or silvicultural discharge as referenced in 40 C.F.R. section 122.42(a), this notification applies to pollutants that are subject neither to effluent limitations in this Order nor to notification requirements under 40 C.F.R. section 122.42(a)(1) (see Additional Provisions—Notification Levels VII.A.1).) (40 C.F.R. § 122.41(l)(1)(ii).)

G. Anticipated Noncompliance

The Discharger shall give advance notice to the Regional Water Board or State Water Board of any planned changes in the permitted facility or activity that may result in noncompliance with this Order's requirements. (40 C.F.R. § 122.41(l)(2).)

H. Other Noncompliance

The Discharger shall report all instances of noncompliance not reported under Standard Provisions—Reporting V.C, V.D, and V.E above at the time monitoring reports are submitted. The reports shall contain the information listed in Standard Provisions—Reporting V.E above. For noncompliance related to combined sewer overflows, sanitary sewer overflows, or bypass events, these reports shall contain the information described in Standard Provision – Reporting V.E and the applicable required data in appendix A to 40 C.F.R. part 127. The Regional Water Board may also require the Discharger to electronically submit reports not related to combined sewer overflows, sanitary sewer overflows, or bypass events under this section. (40 C.F.R. § 122.41(l)(7).)

I. Other Information

When the Discharger becomes aware that it failed to submit any relevant facts in a permit application, or submitted incorrect information in a permit application or in any report to the Regional Water Board, State Water Board, or U.S. EPA, the Discharger shall promptly submit such facts or information. (40 C.F.R. § 122.41(l)(8).)

J. Initial Recipient for Electronic Reporting Data

The owner, operator, or duly authorized representative is required to electronically submit NPDES information specified in appendix A to 40 C.F.R. part 127 to the initial recipient defined in 40 C.F.R. section 127.2(b). U.S. EPA will identify and publish the list of initial recipients on its website and in the Federal Register, by state and by NPDES data group [see 40 C.F.R. § 127.2(c)]. U.S. EPA will update and maintain this list. (40 C.F.R. § 122.41(l)(9).)

VI. STANDARD PROVISIONS—ENFORCEMENT

A. The Regional Water Board is authorized to enforce the terms of this Order under several provisions of the Water Code, including, but not limited to, sections 13268, 13350, 13385, 13386, and 13387.

VII. ADDITIONAL PROVISIONS—NOTIFICATION LEVELS

A. Non-Municipal Facilities

Existing manufacturing, commercial, mining, and silvicultural dischargers shall notify the Regional Water Board as soon as they know or have reason to believe (40 C.F.R. § 122.42(a)):

1. That any activity has occurred or will occur that would result in the discharge, on a routine or frequent basis, of any toxic pollutant that is not limited in this Order, if that discharge will exceed the highest of the following "notification levels" (40 C.F.R. § 122.42(a)(1)):

a. 100 micrograms per liter (µg/L) (40 C.F.R. § 122.42(a)(1)(i));

b. 200 µg/L for acrolein and acrylonitrile; 500 µg/L for 2,4-dinitrophenol and 2-methyl-4,6-dinitrophenol; and 1 milligram per liter (mg/L) for antimony (40 C.F.R. § 122.42(a)(1)(ii));

c. Five (5) times the maximum concentration value reported for that pollutant in the Report of Waste Discharge (40 C.F.R. § 122.42(a)(1)(iii)); or

d. The level established by the Regional Water Board in accordance with section 40 C.F.R. 122.44(f). (40 C.F.R. § 122.42(a)(1)(iv).)

2. That any activity has occurred or will occur that would result in the discharge, on a non-routine or infrequent basis, of any toxic pollutant that is not limited in this Order, if that discharge will exceed the highest of the following "notification levels" (40 C.F.R. § 122.42(a)(2)):

a. 500 micrograms per liter (µg/L) (40 C.F.R. § 122.42(a)(2)(i));

b. 1 milligram per liter (mg/L) for antimony (40 C.F.R. § 122.42(a)(2)(ii));

c. Ten (10) times the maximum concentration value reported for that pollutant in the Report of Waste Discharge (40 C.F.R. § 122.42(a)(2)(iii)); or

d. The level established by the Regional Water Board in accordance with 40 C.F.R. section 122.44(f). (40 C.F.R. § 122.42(a)(2)(iv).)

B. Publicly-Owned Treatment Works (POTWs)

All POTWs shall provide adequate notice to the Regional Water Board of the following (40 C.F.R. § 122.42(b)):

1. Any new introduction of pollutants into the POTW from an indirect discharger that would be subject to CWA sections 301 or 306 if it were directly discharging those pollutants (40 C.F.R. § 122.42(b)(1)); and

2. Any substantial change in the volume or character of pollutants being introduced into that POTW by a source introducing pollutants into the POTW at the time of adoption of this Order. (40 C.F.R. § 122.42(b)(2).)

3. Adequate notice shall include information on the quality and quantity of effluent introduced into the POTW as well as any anticipated impact of the change on the quantity or quality of **effluent to be discharged from the POTW. (40 C.F.R. § 122.42(b)(3).)**

ATTACHMENT E – MONITORING AND REPORTING PROGRAM (MRP)

Contents

I. General Monitoring Provisions E-2
II. Monitoring Locations E-3
III. Effluent Monitoring Requirements E-4
IV. Receiving Water Monitoring Requirements E-6
  A. Monitoring Locations RSW-001 and RSW-001A E-6
  B. Monitoring Location RSW-002 ..... E-7
  C. Monitoring Location RSW-004 ..... E-8
  D. Monitoring Locations RSW-005 through RSW-007 ..... E-9
V. Toxicity Testing Requirements E-10
  A. Monitoring Locations EFF-001 and EFF-007 ..... E-10
    1. Acute Toxicity E-10
    2. Chronic Toxicity E-11
  B. Monitoring Locations RSW-001, RSW-004, and RSW-005 ..... E-14
    1. Monitoring Requirements E-14
    2. Reporting Requirements E-14
    3. Toxicity Reduction Evaluation (TRE) E-15
VI. Reporting Requirements E-16
  A. General Monitoring and Reporting Requirements E-16
  B. Self-Monitoring Reports (SMRs) E-16
  C. Discharge Monitoring Reports (DMRs) E-19

Tables

Table E-1. Monitoring Locations E-3
Table E-2. Effluent Monitoring—Monitoring Locations EFF-001 and EFF-007 ..... E-4
Table E-3. Effluent Monitoring—Monitoring Locations EFF-002 and EFF-004 through EFF-006 ..... E-5
Table E-4. Receiving Water Monitoring - Monitoring Locations RSW-001 and RSW-001A E-6
Table E-5. Receiving Water Monitoring—Monitoring Location RSW-002 ..... E-8
Table E-6. Receiving Water Monitoring—Monitoring Location RSW-004 ..... E-8
Table E-7. Receiving Water Monitoring—Monitoring Locations RSW-005 through RSW-007 ..... E-9
Table E-8. CIWQS Reporting E-17
Table E-9. Monitoring Periods E-17

ATTACHMENT E – MONITORING AND REPORTING PROGRAM (MRP)

Clean Water Act section 308 and 40 C.F.R. sections 122.41(h), 122.41(j)-(l), 122.44(i), and 122.48 require that all NPDES permits specify monitoring and reporting requirements. Water Code sections 13267 and 13383 also authorize the Regional Water Board to establish monitoring, inspection, entry, reporting, and recordkeeping requirements. This MRP establishes monitoring, reporting, and recordkeeping requirements that implement federal and State laws and regulations.

I. GENERAL MONITORING PROVISIONS

A. The Discharger shall comply with this MRP. The Executive Officer may amend this MRP pursuant to 40 C.F.R. sections 122.62, 122.63, and 124.5. If any discrepancies exist between this MRP and the *Regional Standard Provisions, and Monitoring and Reporting Requirements (Supplement to Attachment D) for NPDES Wastewater Discharge Permits* (Attachment G) or *Stormwater Provisions, Monitoring, and Reporting Requirements* (Attachment S), this MRP shall prevail.

B. The Discharger shall conduct all monitoring in accordance with Attachment D, section III, as supplemented by Attachment G. Equivalent test methods must be more sensitive than those specified in 40 C.F.R. section 136 and must be specified in this permit.

C. The Discharger shall ensure that results of the Discharge Monitoring Report-Quality Assurance (DMR-QA) Study or most recent Water Pollution Performance Evaluation Study are submitted annually to the State Water Board at the following address:

State Water Resources Control Board
Quality Assurance Program Officer
Office of Information Management and Analysis
1001 I Street, Sacramento, CA 95814

D. The Discharger shall implement a Quality Assurance-Quality Control Program for any onsite field tests (e.g., turbidity, pH, temperature, dissolved oxygen, conductivity, disinfectant residual) analyzed by a noncertified laboratory. The Discharger shall keep a manual onsite containing the steps followed in this program and must demonstrate sufficient capability to adequately perform these field tests (e.g., qualified and trained employees, properly calibrated and maintained field instruments). The program shall conform to U.S. EPA guidelines or other approved procedures.

E. For parameters reported to the California Environmental Data Exchange Network (CEDEN), monitoring data must be Surface Water Ambient Monitoring Program (SWAMP) comparable. Minimum data quality shall be consistent with the latest version of the *SWAMP Quality Assurance Program Plan* (*QAPP*), currently the 2017 version (SWAMP, May 2017), for applicable parameters, including data quality objectives; field and laboratory blanks; field duplicates; laboratory spikes; and clean techniques using the most recent SWAMP Standard Operating Procedures. To achieve SWAMP comparable and acceptable data quality, monitoring under this Order shall be consistent with the "Regulation" intended data use of the SWAMP QAPP (SWAMP, May 2017, page 54). The data shall be collected under this Order's terms, conditions, and requirements. All laboratories performing analytical work are required to be NELAP or ELAP certified. In addition, methods shall be compliant with 40 C.F.R. 136 where applicable. At a minimum, method minimum quality control samples and acceptance criteria

specified in the following SWAMP Measurement Quality Objectives apply to monitoring conducted under this Order:

- *Conventional Parameters in Fresh and Marine Water* (SWAMP, 2013)
- *Field Measurements in Fresh and Marine Water* (SWAMP, 2013),
- *Inorganic Analytes in Fresh and Marine Water* (SWAMP, 2013), and
- *Chronic Freshwater Toxicity Testing* (SWAMP, August 22, 2018).

SWAMP documents on the above topics can be found at the *SWAMP – Quality Assurance* webpage (https://www.waterboards.ca.gov/water_issues/programs/swamp/quality_assurance.html) and *SWAMP - Quality Control and Sample Handling Guidelines* webpage (https://www.waterboards.ca.gov/water_issues/programs/swamp/mqo.html).

II. MONITORING LOCATIONS

The Discharger shall establish the following monitoring locations to demonstrate compliance with the effluent limitations, discharge specifications, and other requirements in this Order.

Table E-1. Monitoring Locations

Monitoring Location Type	Monitoring Location Name	Monitoring Location Description [1]
Effluent	EFF-001	A point in the outfall from the Final Treatment System-Upper (FTS-Upper), following treatment and prior to the receiving water, at which all waste tributary to the outfall is present. *Latitude 37.31703º Longitude -122.11165º*
Effluent	EFF-002	A point in the outfall from Pond 13B (Discharge Point No. 002), prior to the receiving water, at which all waste tributary to the outfall is present. *Latitude 37.31674º N Longitude -122.10167º*
Effluent	EFF-004	A point in the outfall from Pond 17 (Discharge Point No. 004), prior to the receiving water, at which all waste tributary to the outfall is present. *Latitude 37.31431 Longitude -122.10167*
Effluent	EFF-005	A point in the outfall from Pond 20 (Discharge Point No. 005), prior to the receiving water, at which all waste tributary to the outfall is present. *Latitude 37.32016º Longitude -122.08944º*
Effluent	EFF-006	A point in the outfall from Pond 30 (Discharge Point No. 006), prior to the receiving water, where all runoff from the East Materials Storage Area tributary to the outfall is present. *Latitude 37.32314º Longitude -122.08553º*
Effluent	EFF-007	A point in the outfall from the Final Treatment System-Lower (FTS-Lower), following treatment and prior to the receiving water, at which all waste tributary to the outfall is present. *Latitude 37.31778° Longitude -122.08750°*
Receiving Water	RSW-001	A point in Permanente Creek within 300 feet upstream of in-stream Pond 13. *Latitude 37.31662° Longitude -122.10251° (approximate)*
Receiving Water	RSW-001A	A point in Permanente Creek 200 feet or less downstream from the confluence of Wild Violet Creek and Permanente Creek. *Latitude 37.3198854° Longitude -122.1305567°*
Receiving Water	RSW-002	A point in Permanente Creek within 50 feet downstream of Discharge Point No. 002. *Latitude 37.31649° Longitude -122.10161° (approximate)*

Monitoring Location Type	Monitoring Location Name	Monitoring Location Description [1]
Receiving Water	RSW-004	A point in Permanente Creek within 50 feet downstream of Discharge Point No. 006 and 50 feet upstream of Pond 14. *Latitude 37.32217° Longitude -122.08436°*
Receiving Water	RSW-005	A point in Permanente Creek at Rancho San Antonio Open Space Upper Bridge (South Meadow Trailhead). *Latitude 32.32941° Longitude -122.08586°* *CEDEN Name: PER070*
Receiving Water	RSW-006	A point in Permanente Creek at Heritage Oaks Park. *Latitude 37.35954° Longitude -122.08717°* *CEDEN Name: PER045*
Receiving Water	RSW-007	A point in Permanente Creek at Crittenden Middle School. *Latitude 37.41247° Longitude -122.08679°* *CEDEN Name: PER020*

Footnote:

[1] Latitude and longitude information is approximate for administrative purposes.

III. EFFLUENT MONITORING REQUIREMENTS

A. The Discharger shall monitor effluent at Monitoring Locations EFF-001 and EFF-007 as follows:

Table E-2. Effluent Monitoring—Monitoring Locations EFF-001 and EFF-007

Parameter	Units	Sample Type [1]	Minimum Sampling Frequency
Flow [2]	MGD	Continuous	Continuous/Day
Oil and Grease	mg/L	Grab	1/Quarter
pH [3]	standard units	Continuous or Grab	Continuous/Day or 1/Day
Settleable Matter	mL/L-hr	Grab	1/Month
Temperature	°C	Grab	1/Month
Total Residual Chlorine	mg/L	Grab	1/Day [3]
Total Suspended Solids (TSS)	mg/L	Grab	1/Week
Antimony	µg/L	Grab	1/Month
Chromium (VI)	µg/L	Grab	1/Month
Mercury	µg/L	Grab	1/Quarter
Nickel	µg/L	Grab	1/Month
Selenium [4]	µg/L	Grab	1/Week
Priority Pollutants [7]	µg/L	Grab	1/Year
Total Dissolved Solids (TDS)	mg/L	Grab	1/Quarter
Acute Toxicity [5]	% Survival	C-24	1/Quarter
Chronic Toxicity [6]	TUc	C-24	1/Quarter
Standard Observations [8]	—	—	1/Day

Unit Abbreviations:

TUc = chronic toxicity units
ºC = degrees Celsius
µg/L = micrograms per liter
mg/L = milligrams per liter
mL/L-hr = milliliters per liter-hour
MGD = million gallons per day
% Survival = percent survival

Sample Type:

Continuous = measured continuously
C-24 = 24-hour composite sample
Grab = grab sample

Sampling Frequency:

Continuous/Day = measured continuously, and recorded and reported at least daily
1/Day = once per day
1/Week = once per week
1/Month = once per month
2/Month = twice per month
1/Quarter = once per quarter
1/Year = once per year

Footnotes:

[1] Grab samples shall be collected during daylight hours.

[2] Flow shall be monitored continuously and the following information shall be reported in monthly self-monitoring reports:
- Daily average flow (gpd)
- Total monthly flow volume (MG)

[3] pH and total residual chlorine shall be monitored once per day, Monday through Friday, at Monitoring Locations EFF-001 and EFF-007. If pH is monitored continuously, the minimum and maximum pH values for each day shall be reported in self-monitoring reports.

[4] The Discharger may reduce the monitoring frequency from 1/Week to 2/Month at one or both locations where full compliance with the selenium effluent limitations has been demonstrated for at least the most recent two years. Before the Discharger may reduce the monitoring frequency, it shall obtain written confirmation from the Executive Officer.

[5] Acute bioassay tests shall be performed in accordance with MRP section V.A.1.

[6] Chronic bioassay tests shall be performed in accordance with MRP section V.A.2.

[7] The Discharger shall monitor for the pollutants listed in Attachment G, Table B.

[8] Standard observations are listed in Attachment G section III.B.2.

B. The Discharger shall monitor effluent at Monitoring Locations EFF-002, EFF-004, EFF-005, and EFF-006 as follows:

Table E-3. Effluent Monitoring—Monitoring Locations EFF-002 and EFF-004 through EFF-006

Parameter	Units	Sample Type [1]	Minimum Sampling Frequency
Conductivity	µmhos/cm	Grab	1/Quarter
Flow [2]	MG	Continuous	1/Month
Oil and Grease [3]	mg/L	Grab	1/Quarter
pH	standard units	Grab	1/Quarter
Settleable Matter	mL/L-hr	Grab	1/Quarter
TSS	mg/L	Grab	1/Quarter
Antimony	µg/L	Grab	1/Quarter
Chromium (VI)	µg/L	Grab	1/Quarter
Mercury	µg/L	Grab	1/Year
Nickel	µg/L	Grab	1/Quarter
Selenium	µg/L	Grab	[4]
Visual Observations [5]	—	—	Each Occurrence

Unit Abbreviations:

µg/L = micrograms per liter
µmhos/cm = micromhos per centimeter
mg/L = milligrams per liter
mL/L-hr = milliliters per liter-hour
MG = million gallons

Sample Type:

Continuous = measured continuously

Grab = grab sample

Sampling Frequency:

Each Occurrence = each significant stormwater discharge, defined as a continuous discharge of stormwater for a minimum of one hour, or an intermittent discharge of stormwater for a minimum of three hours, in a 12-hour period. Visual observations are only required in daylight during scheduled facility operating hours.

1/Month = once per month

1/Quarter = once per quarter

1/Year = once per year

Footnotes:

[1] Grab samples shall be collected during daylight hours.

[2] Flow shall be monitored continuously at all monitoring locations. The following information shall be reported in monthly self-monitoring reports for all monitoring locations:

- Daily average flow (gpd)
- Total monthly flow volume (MG)

[3] At Monitoring Location EFF-006, total organic carbon may be substituted for oil and grease.

[4] The selenium monitoring frequency shall be 1/month during the wet season (November 1 through April 30) and twice during the dry season. Selenium samples shall be collected at EFF-002, EFF-004, EFF-005, and EFF-006 during the first significant stormwater discharge of the wet season (November 1 through April 30) that occurs in daylight during scheduled Facility operating hours.

[5] Visual observations are listed in Attachment S section II.A.

IV. RECEIVING WATER MONITORING REQUIREMENTS

The Discharger shall monitor receiving water at Monitoring Locations RSW-001, RSW-001A, RSW-002, and RSW-004 through RSW-006 according to the following requirements:

- The Discharger shall sample all receiving water monitoring locations on the same day, unless impractical for safety reasons, or due to limited hours of daylight.
- The Discharger shall collect the first receiving water samples of each wet season (November 1 through April 30) after the first storm that causes a "significant stormwater discharge," defined as follows:
  - a continuous discharge of stormwater for a minimum of one hour, or
  - an intermittent discharge of stormwater for a minimum of three hours in a 12-hour period.

In addition, the Discharger shall monitor as indicated in Tables E-4 through E-6 below.

A. Monitoring Locations RSW-001 and RSW-001A

The Discharger shall monitor receiving water at Monitoring Locations RSW-001 and RSW-001A as follows:

Table E-4. Receiving Water Monitoring - Monitoring Locations RSW-001 and RSW-001A

Parameter	Units	Sample Type	Minimum Sampling Frequency [1]
Chloride [2]	mg/L	Grab	1/Year
Conductivity	µmhos/cm	Grab	[3]
Dissolved Oxygen	mg/L and % Saturation	Grab	[3]
Flow	cfs	Monthly	[3]
Total Hardness as Calcium Carbonate ($CaCO_3$) [4]	mg/L	Grab	1/Year
pH	Standard Units	Grab	[3]
Settleable Matter [4]	mL/L-hr	Grab	1/Year

Parameter	Units	Sample Type	Minimum Sampling Frequency [1]
Sulfate [2]	mg/L	Grab	1/Quarter
Temperature	ºC	Grab	[3]
TSS	mg/L	Grab	[3]
Turbidity	NTU	Grab	1/Year
Antimony	µg/L	Grab	1/Year
Chromium (VI)	µg/L	Grab	1/Year
Chronic Toxicity [1, 2, 5]	TUc	Grab	1/Quarter
Mercury	µg/L	Grab	1/Year
Nickel	µg/L	Grab	1/Year
Selenium	µg/L	Grab	[3]
Priority Pollutants [6]	µg/L	Grab	1/Year
TDS	mg/L	Grab	1/Year
Trace Metals [2, 7]	µg/L	Grab	1/Quarter
Standard Observations [8]	—	—	[3]

Unit Abbreviations:

TUc = chronic toxicity units
cfs = cubic feet per second
ºC = degrees Celsius
µg/L = micrograms per liter
µmhos/cm = micromhos per centimeter
mg/L = milligrams per liter
mL/L-hr = milliliters per liter-hour
% Saturation = percent saturation

Sampling Frequencies:

1/Month = once per month
1/Quarter = once per quarter
1/Year = once per year

Footnotes:

[1] Samples shall be collected on the same day as effluent monitoring at Monitoring Locations EFF-001 and EFF-007 at least once per year.

[2] To be monitored at Monitoring Location RSW-001. Monitoring is not required at RSW-001A.

[3] The monitoring frequency at Monitoring Location RSW-001 shall be monthly during the wet season (November 1 through April 30) and twice during the dry season (May 1 through October 31). The monitoring frequency at Monitoring Location RSW-001A shall be 1/Year.

[4] Hardness and settleable matter shall be monitored at Monitoring Location RSW-001A. Hardness and settleable matter monitoring is not required at Monitoring Location RSW-001.

[5] Chronic bioassay tests shall be performed in accordance with MRP section V.B.

[6] The Discharger shall monitor for the pollutants listed in Attachment G, Table B

[7] Trace metals are total recoverable antimony, arsenic, cadmium, total chromium, chromium (VI), copper, molybdenum, nickel, thallium, vanadium, and zinc. Trace metals shall be monitored concurrently with chronic toxicity. Quarterly monitoring for antimony, chromium (VI), and nickel with trace metals satisfies the quarterly monitoring requirements set forth here.

[8] Standard Observations are listed in Attachment G section III.C.1.

B. Monitoring Location RSW-002

The Discharger shall monitor receiving water at Monitoring Location RSW-002 when there is discharge at Discharge Point 002 as follows:

Table E-5. Receiving Water Monitoring—Monitoring Location RSW-002

Parameter	Units	Sample Type	Minimum Sampling Frequency
Dissolved Oxygen	mg/L and % Saturation	Grab	1/Quarter
Flow	cfs	Monthly	1/Quarter
pH	Standard Units	Grab	1/Quarter
Temperature	ºC	Grab	1/Quarter
TSS	mg/L	Grab	1/Quarter
Turbidity	NTU	Grab	1/Quarter
Antimony	µg/L	Grab	1/Quarter
Chromium (VI)	µg/L	Grab	1/Quarter
Mercury	µg/L	Grab	1/Year
Nickel	µg/L	Grab	1/Quarter
Selenium	µg/L	Grab	1/Quarter
TDS	mg/L	Grab	1/Year
Standard Observations [1]	—	—	1/Quarter

Unit Abbreviations:

cfs = cubic feet per second
ºC = degrees Celsius
µg/L = micrograms per liter
mg/L = milligrams per liter
% Saturation = percent saturation

Sampling Frequencies:

1/Quarter = once per quarter
1/Year = once per year

Footnote:

[1] Standard observations are listed in Attachment G section III.C.1.

C. Monitoring Location RSW-004

The Discharger shall monitor receiving water at Monitoring Location RSW-004 as follows:

Table E-6. Receiving Water Monitoring—Monitoring Location RSW-004

Parameter	Units	Sample Type	Minimum Sampling Frequency [1]
Chloride	mg/L	Grab	1/Quarter
Dissolved Oxygen	mg/L and % Saturation	Grab	[2]
Flow	cfs	Monthly	[2]
Total Hardness as $CaCO_3$	mg/L	Grab	1/Quarter
pH	Standard Units	Grab	[2]
Sulfate	mg/L	Grab	1/Quarter
Temperature	ºC	Grab	[2]
TSS	mg/L	Grab	[2]
Turbidity	NTU	Grab	1/Quarter
Antimony	µg/L	Grab	[3]
Chromium (VI)	µg/L	Grab	[3]
Chronic Toxicity [4]	TUc	Grab	1/Quarter
Nickel	µg/L	Grab	[3]
Selenium	µg/L	Grab	[2]
TDS	mg/L	Grab	1/Year

Parameter	Units	Sample Type	Minimum Sampling Frequency [1]
Trace Metals [5]	µg/L	Grab	1/Quarter
Standard Observations [6]	—	—	[2]

Unit Abbreviations:

TUc = chronic toxicity units
cfs = cubic feet per second
ºC = degrees Celsius
µg/L = micrograms per liter
mg/L = milligrams per liter
% Saturation = percent saturation

Sampling Frequencies:

1/Quarter = once per quarter
1/Year = once per year

Footnotes:

[1] Samples shall be collected on the same day as effluent monitoring at Monitoring Locations EFF-001 and EFF-007 at least once per year, and on the same day as effluent monitoring at Monitoring Locations EFF-004 through EFF-006 at least once per year if possible.

[2] Monitoring frequency shall be monthly during the wet season (November 1 through April 30) and twice during the dry season.

[3] Antimony, chromium (VI), and nickel shall be monitored concurrently with chronic toxicity.

[4] Chronic bioassay tests shall be performed in accordance with MRP section V.B.

[5] Trace metals are total recoverable arsenic, cadmium, chromium, copper, molybdenum, thallium, vanadium, and zinc. Trace metals shall be monitored concurrently with chronic toxicity.

[6] Standard observations are listed in Attachment G section III.C.1.

D. Monitoring Locations RSW-005 through RSW-007

The Discharger shall monitor receiving water at Monitoring Locations RSW-005 through RSW-007 as follows:

Table E-7. Receiving Water Monitoring—Monitoring Locations RSW-005 through RSW-007

Parameter	Units	Sample Type	Minimum Sampling Frequency [1]
Chloride [2]	mg/L	Grab	1/Quarter
Dissolved Oxygen	mg/L and % Saturation	Grab	1/Quarter
Flow	cfs	Monthly	1/Quarter
Total Hardness as $CaCO_3$ [2]	mg/L	Grab	1/Quarter
pH	Standard Units	Grab	1/Quarter
Sulfate [2]	mg/L	Grab	1/Quarter
Temperature	ºC	Grab	1/Quarter
TSS	mg/L	Grab	1/Quarter
Turbidity	NTU	Grab	1/Quarter
Antimony	µg/L	Grab	[3]
Chromium (VI)	µg/L	Grab	[3]
Chronic Toxicity [2, 4]	TUc	Grab	1/Quarter
Mercury [5]	µg/L	Grab	1/Year
Nickel	µg/L	Grab	[3]
Selenium	µg/L	Grab	1/Quarter
TDS	mg/L	Grab	1/Year
Trace Metals [2, 6]	µg/L	Grab	1/Quarter
Standard Observations [7]	—	—	1/Quarter

Unit Abbreviations:

TUc	= chronic toxicity units
cfs	= cubic feet per second
ºC	= degrees Celsius
µg/L	= micrograms per liter
mg/L	= milligrams per liter
% Saturation	= percent saturation

Sampling Frequencies:

1/Quarter	= once per quarter
1/Year	= once per year

Footnotes:

[1] Monitoring at Monitoring Location RSW-005 is required only if flow from the Facility continues to this location. Monitoring at Monitoring Locations RSW-006 and RSW-007 is required only when flow from upper Permanente Creek continues to these locations.

[2] Chloride, total hardness as $CaCO_3$, sulfate, chronic toxicity, and trace metals shall be monitored at Monitoring Location RSW-005. Such monitoring is not required at Monitoring Locations RSW-006 and RSW-007.

[3] Antimony, chromium (VI), and nickel shall be monitored concurrently with chronic toxicity at Monitoring Location RSW-005. Such monitoring is not required at Monitoring Locations RSW-006 and RSW-007.

[4] Chronic bioassay tests shall be performed in accordance with MRP section V.B.

[5] Mercury shall be monitored at Monitoring Location RSW-005. Mercury monitoring is not required at Monitoring Locations RSW-006 and RSW-007.

[6] Trace metals are total recoverable arsenic, cadmium, chromium, copper, molybdenum, thallium, vanadium, and zinc. Trace metals shall be monitored concurrently with chronic toxicity.

[7] Standard observations are listed in Attachment G section III.C.1.

V. TOXICITY TESTING REQUIREMENTS

The Discharger shall monitor acute and chronic toxicity at Monitoring Locations EFF-001 and EFF-007, and chronic toxicity at Monitoring Locations RSW-001, RSW-004, and RSW-005.

A. Monitoring Locations EFF-001 and EFF-007

1. Acute Toxicity

a. Compliance with the acute toxicity effluent limitations shall be evaluated by measuring survival of test organisms exposed to 96-hour static renewal bioassays.

b. Test organisms shall be rainbow trout (*Oncorhynchus mykiss*). The Executive Officer may specify a more sensitive organism or, if testing a particular organism proves unworkable, the most sensitive organism available.

c. All bioassays shall be performed according to the most up-to-date protocols in 40 C.F.R. part 136, currently *Methods for Measuring the Acute Toxicity of Effluents and Receiving Water to Freshwater and Marine Organisms*, 5th Edition (EPA-821-R-02-012).

d. If the Discharger demonstrates that specific identifiable substances in the discharge are rapidly rendered harmless upon discharge to the receiving water, compliance with the acute toxicity limit may be determined after test samples are adjusted to remove the influence of those substances. Written acknowledgement that the Executive Officer concurs with the Discharger's demonstration and that the adjustment will not remove the influence of other substances must be obtained prior to any such adjustment. The

Discharger may manually adjust the pH of whole effluent acute toxicity samples prior to performing bioassays to minimize ammonia toxicity interference.

e. Bioassay water monitoring shall include, on a daily basis, residual chlorine, pH, dissolved oxygen, ammonia (if toxicity is observed), temperature, hardness, and alkalinity. These results shall be reported. If a violation of an acute toxicity limit occurs, the bioassay test shall be repeated with new fish as soon as practical and shall be repeated until a test fish survival rate of 90 percent or greater is observed. If the control fish survival rate is less than 90 percent, the bioassay test shall be restarted with new fish and shall continue as soon as practical until an acceptable test is completed (i.e., control fish survival rate is 90 percent or greater).

2. Chronic Toxicity

a. Monitoring Requirements

i. Sampling. The Discharger shall collect 24-hour composite effluent samples at Monitoring Locations EFF-001 and EFF-007 on consecutive or alternating days for critical life stage toxicity testing as indicated below.

ii. Test Species. The test species shall be water flea (*Ceriodaphnia dubia*) unless a more sensitive species is identified. If using this species proves unworkable, the Executive Officer may specify a different species in writing upon the Discharger's request with justification.

The Discharger shall conduct a screening chronic toxicity test as described in Appendix E-1, or as described in applicable State Water Board plan provisions that become effective after adoption of this Order, following any significant change in the nature of the effluent after implementation of the final treatment system. If there is no significant change in the nature of the effluent, the Discharger shall conduct a screening test for each discharge point and submit the results with its application for permit reissuance. Upon completion of the chronic toxicity screening, the Discharger shall use the most sensitive species to conduct subsequent monitoring.

iii. Frequency. Chronic toxicity monitoring shall be as specified below:

(a) The Discharger shall monitor routinely as indicated in Table E-2.

(b) The Discharger shall accelerate monitoring to monthly after exceeding either a single-sample maximum of 2.0 TUc or a three-sample median of 1.0 TUc. The Executive Officer may specify a different frequency to ensure that accelerated monitoring provides useful information.

(c) The Discharger shall return to quarterly monitoring if accelerated monitoring does not exceed either trigger in (b), above.

(d) If accelerated monitoring confirms consistent toxicity in excess of either trigger in (b), above, the Discharger shall continue accelerated monitoring and initiate toxicity reduction evaluation (TRE) procedures in accordance with section V.A.2.c, below.

(e) The Discharger shall return to routine monitoring after implementing appropriate elements of the TRE, and either the toxicity drops below the triggers in (b), above, or, based on the TRE results, the Executive Officer determines that accelerated monitoring would no longer provide useful information.

(f) Monitoring conducted pursuant to a TRE satisfies the requirements for routine and accelerated monitoring while the TRE is underway.

iv. Methodology. Sample collection, handling, and preservation shall be in accordance with U.S. EPA protocols. In addition, bioassays shall be conducted in compliance with *Short-term Methods for Estimating the Chronic Toxicity of Effluents and Receiving Waters to Freshwater Organisms*, currently fourth Edition (EPA-821-R-02-013). If these protocols prove unworkable, the Executive Officer and the Environmental Laboratory Accreditation Program may grant exceptions in writing upon the Discharger's request with justification, provided that the revised protocols are equally protective. If the Discharger demonstrates that specific identifiable substances in the discharge are rapidly rendered harmless upon discharge to the receiving water, compliance with the chronic toxicity limit may be determined after test samples are adjusted to remove the influence of those substances. Written acknowledgement that the Executive Officer concurs with the Discharger's demonstration and that the adjustment will not remove the influence of other substances must be obtained prior to any such adjustment.

v. Dilution Series. The Discharger shall conduct tests at 100%, 75%, 50%, 25%, 12.5%, and 0%. The "%" represents percent effluent as discharged. Test sample pH may be controlled to the level of the effluent sample as received by the laboratory.

b. Reporting Requirements

i. The Discharger shall provide toxicity test results for the current reporting period in the self-monitoring report and shall include the following, at a minimum, for each test:

(a) Sample date

(b) Test initiation date

(c) Test species

(d) End point values for each dilution (e.g., number of young, growth rate, percent survival)

(e) No Observable Effect Level (NOEL) values in percent effluent. The NOEL shall equal the IC25 or EC25 (see MRP Appendix E-1). If the IC25 or EC25 cannot be statistically determined, the NOEL shall equal to the No Observable Effect Concentration (NOEC) derived using hypothesis testing. The NOEC is the maximum percent effluent concentration that causes no observable effect on test organisms based on a critical life stage toxicity test.

(f) IC15, IC25, IC40, and IC50 values (or EC15, EC25, EC40, and EC50) as percent effluent

(g) TUc values (100/NOEL) and upper and lower confidence intervals.

(h) Mean percent mortality (±s.d.) after 96 hours in 100% effluent (if applicable)

(i) IC50 or EC50 values for reference toxicant tests

(j) Available water quality measurements for each test (e.g., pH, residual chlorine, dissolved oxygen, temperature, conductivity, hardness, salinity, and ammonia)

c. Toxicity Reduction Evaluation (TRE)

i. The Discharger shall prepare a generic TRE work plan within 90 days of the effective date of this Order to be ready to respond to toxicity events. The Discharger shall review and update the work plan as necessary so that it remains current and applicable to the discharge and discharge facilities.

ii. Within 30 days of exceeding either chronic toxicity trigger in section V.A.2.a.iii.(b), above, the Discharger shall submit a TRE work plan, which shall be the generic work plan revised as appropriate for this toxicity event after consideration of available discharge data.

iii. Within 30 days of completing an accelerated monitoring test observed to exceed either chronic toxicity trigger in section V.A.2.a.iii.(b), above, the Discharger shall initiate a TRE in accordance with a TRE work plan that incorporates any and all comments from the Executive Officer.

iv. The TRE shall be specific to the discharge and be in accordance with current technical guidance and reference materials, including U.S. EPA guidance materials. The Discharger shall conduct the TRE as a tiered evaluation as summarized below:

(a) Tier 1 shall consist of basic data collection (routine and accelerated monitoring).

(b) Tier 2 shall consist of evaluation of treatment process optimization, including operational practices and in-plant process chemicals.

(c) Tier 3 shall consist of a toxicity identification evaluation (TIE).

(d) Tier 4 shall consist of evaluation of options for additional effluent treatment processes.

(e) Tier 5 shall consist of evaluation of options for modifications of in-plant treatment processes.

(f) Tier 6 shall consist of implementation of selected toxicity control measures, and follow-up monitoring and confirmation of implementation success.

v. The Discharger may end the TRE at any stage if monitoring finds there is no longer consistent toxicity (i.e., chronic toxicity drops below both triggers in section V.A.2.a.iii.(b), above).

vi. The objective of the TIE shall be to identify the substance or combination of substances causing the observed toxicity. The Discharger shall employ all reasonable efforts using currently available TIE methodologies.

vii. As toxic substances are identified or characterized, the Discharger shall continue the TRE by determining the sources and evaluating alternative strategies for reducing or eliminating the toxic substances from the discharge. The Discharger shall take all reasonable steps to reduce toxicity to levels below the triggers in section V.A.2.a.iii.(b), above.

viii. Many recommended TRE elements parallel required or recommended efforts related to source control, pollution prevention, and stormwater control programs. TRE efforts should be coordinated with such efforts. To prevent duplication of efforts, evidence of complying with requirements or recommended efforts of such programs may be acceptable to demonstrate compliance with TRE requirements.

B. Monitoring Locations RSW-001, RSW-004, and RSW-005

1. Monitoring Requirements

a. Sampling. The Discharger shall collect samples for chronic toxicity testing as indicated in Tables E-4 and E-6.

b. Test Species. The test species at Monitoring Locations RSW-001, RSW-004, and RSW-005 shall be water flea (*Ceriodaphnia dubia*) and algae (*Selenastrum capricornutum*).

c. Methodology. The Discharger shall use single-concentration toxicity tests (i.e., 100% ambient water collected on the sampling day as a single grab). Once a toxicity test has concluded, the Discharger shall evaluate organism performance (control vs. ambient sample) using Surface Water Ambient Monitoring Program's (SWAMP's) standard statistical protocol, which involves the examination of significant differences in test organism performance by a one-tailed t-test ($\alpha = 0.05$) or Test for Significant Toxicity (TST), and a categorization of the performance of organisms exposed to the ambient sample as either greater or less than 80 percent of the control performance (*SWAMP Toxicity Work Group Recommendation for Evaluating Toxicity Data,* SWAMP, 2014; *Introduction to Toxicity Test Methodology and Applications*, SWAMP, 2016; *Final Quality Assurance Program Plan*, SWAMP, 2017). For purposes of receiving water testing, a sample is considered toxic only when there is a significant t-test or TST result and performance below the 80 percent threshold of the control is observed.

2. Reporting Requirements

a. The Discharger shall provide toxicity test results for the current reporting period in the self-monitoring report and shall include the following, at a minimum, for each test:

i. Sample date

ii. Test initiation date

iii. Test species

iv. End point values for each dilution (e.g., number of young, growth rate, percent survival)

v. No Observable Effect Concentration (NOEC) values, derived using hypothesis testing, in percent effluent. The NOEC is the maximum percent effluent concentration that causes no observable effect on test organisms based on a critical life stage toxicity test.

vi. TUc values (100/NOEC)

vii. Mean percent mortality (±s.d.) after 96 hours in 100% effluent (if applicable)

viii. IC50 or EC50 values for reference toxicant tests

ix. Available water quality measurements for each test (e.g., pH, residual chlorine, dissolved oxygen, temperature, conductivity, hardness, salinity, and ammonia)

3. Toxicity Reduction Evaluation (TRE)

a. Monitoring Locations RSW-001 and RSW-004. The Discharger shall conduct a TIE when it observes toxicity at Monitoring Location RSW-001 or RSW-004 and the following circumstances exist:

i. the Discharger is not currently conducting a TRE for discharges from Discharge Point Nos. 001 or 007,

ii. discharges from Discharge Point Nos. 001 or 007 are not otherwise identifiable as causes of the observed toxicity (e.g., are not toxic concurrently with the receiving water), and

iii. the percent effect in the receiving water sample is at least 50 percent and statistically significant.

The Discharger shall conduct the TIE using the same sample and affected species. The Discharger shall also follow MRP section V.A.2.c to investigate toxicity at Discharge Point Nos. 001 and 007.

The Discharger shall select TIE treatments based on weight of evidence (e.g., nature of the toxicity observed, historical TIE results, and concurrent analytical test results for metals, minerals, suspended solids; etc.). The Discharger shall describe its rationale for TIE treatment selection in the appropriate SMR.

The Discharger may conduct the TIE using a single species if more than one species exhibits toxicity and the same cause is suspected. The Discharger may also conduct the TIE on a sample from one monitoring location if toxicity is observed at both monitoring locations and there is continuous flow between them. The Discharger shall describe its rationale for species and monitoring location selection in the appropriate SMR.

The Discharger is not required to conduct a TIE if the cause of toxicity can be identified based on weight-of-evidence using previous TRE or TIE data (e.g., there is a consistent chemical signal associated with the observed toxicity). The Discharger shall report its rationale for not conducting a TIE and identifying the cause of toxicity in the appropriate SMR.

If the percent effect in the receiving water sample is less than 50 percent but statistically significant, the Discharger shall analyze possible causes of toxicity based on available data (e.g., trace metals, mineral content, turbidity, or test-related quality assurance or quality control data) and report the results in the appropriate SMR.

b. **Monitoring Location RSW-005.** If the Discharger observes toxicity at Monitoring Location RSW-005 and is not currently conducting a TRE for discharges from Discharge Point Nos. 001 or 007, the Discharger shall assess whether the toxicity could be due to stormwater discharged from Discharge Point Nos. 002, 004, 005, or 006. The Discharger may also evaluate other possible sources, such as contaminated runoff entering the creek downstream of the Facility, that may be causing the toxicity.

VI. REPORTING REQUIREMENTS

A. General Monitoring and Reporting Requirements

The Discharger shall comply with all standard provisions (Attachments D, G, and S) related to monitoring, reporting, and recordkeeping.

B. Self-Monitoring Reports (SMRs)

1. **SMR Format.** The Discharger shall electronically submit SMRs using the State Water Board's California Integrated Water Quality System (CIWQS) Website (http://www.waterboards.ca.gov/water_issues/programs/ciwqs). The CIWQS website will provide additional information for SMR submittal in the event of a planned service interruption for electronic submittal.

2. **SMR Due Dates and Contents.** The Discharger shall submit SMRs by the due dates, and with the contents, specified below:

   a. **Monthly SMRs —** Monthly SMRs shall be due 30 days after the end of each calendar month, covering that calendar month. The monthly SMR shall contain the applicable items described in sections V.B and V.C of both Attachments D and G to this Order. See Provision VI.C.2 (Effluent Characterization Study and Report) of this Order for information that must also be reported with monthly SMRs.

   Monthly SMRs shall include all new monitoring results obtained since the last SMR was submitted. If the Discharger monitors any pollutant more frequently than required by this Order, the Discharger shall include the results of such monitoring in the calculations and reporting for the SMR.

   b. **Annual SMR —** Annual SMRs shall be due February 1 each year, covering the previous calendar year. The annual SMR shall contain the items described in sections V.C.1.f of Attachment G. See also Provision VI.C.2 (Effluent Characterization Study and Report) of this Order and Attachment S to this Order as modified by MRP section VII.A for requirements to submit reports with the annual SMR.

   c. **Specifications for Submitting SMRs to CIWQS —** The Discharger shall submit analytical results and other information using one of the following methods:

Table E-8. CIWQS Reporting

Parameter	Method of Reporting: EDF/CDF data upload or manual entry	Method of Reporting: Attached File
All parameters identified in influent, effluent, and receiving water monitoring tables (except Dissolved Oxygen and Temperature)	Required for all results	—
Dissolved Oxygen Temperature	Required for monthly maximum and minimum results only [1]	Discharger may use this method for all results or keep records
Cyanide Arsenic Cadmium Chromium Copper Lead Mercury Nickel Selenium Silver Zinc Dioxins and Furans (by U.S. EPA Method 1613)	Required for all results [2]	—
Antimony Beryllium Thallium Other Pollutants (by U.S. EPA Methods 601, 602, 608, 610, 614, 624, and 625)	Not required (unless identified in influent, effluent, or receiving water monitoring tables), but encouraged [1]	Discharger may use this method and submit results with application for permit reissuance, unless data are submitted by CDF/EDF upload
Analytical Method	Not required (Discharger may select "data unavailable") [1]	—
Collection Time Analysis Time	Not required (Discharger may select "0:00") [1]	—

Footnotes:

[1] The Discharger shall continue to monitor at the minimum frequency specified in this MRP, keep records of the measurements, and make the records available upon request.

[2] These parameters require EDF/CDF data upload or manual entry regardless of whether monitoring is required by this MRP or other provisions of this Order (except for biosolids, sludge, or ash provisions).

The Discharger shall arrange all reported data in a tabular format and summarize data to clearly illustrate whether the Facility is operating in compliance with effluent limitations. The Discharger is not required to duplicate the submittal of data entered in a tabular format within CIWQS. When electronic submittal of data is required and CIWQS does not provide for entry into a tabular format, the Discharger shall electronically submit the data in a tabular format as an attachment.

3. **Monitoring Periods.** Monitoring periods for all required monitoring shall be as set forth below unless otherwise specified:

Table E-9. Monitoring Periods

Sampling Frequency	Monitoring Period Begins On…	Monitoring Period
Continuous	Permit effective date	All times
1/Day	Permit effective date	Midnight through 11:59 p.m. or any 24-hour period that reasonably represents a calendar day for purposes of sampling

Sampling Frequency	Monitoring Period Begins On…	Monitoring Period
1/Week	Sunday following permit effective date or on permit effective date if on Sunday	Sunday through Saturday
1/Month	First day of calendar month following or on Order effective date	First day of calendar month through last day of calendar month
2/Month	First day of calendar month following permit effective date or on permit effective date if on first day of month	First day of calendar month through last day of calendar month
1/Quarter	Closest January 1, April 1, July 1, or October 1 before or after Order effective date [1]	January 1 through March 31 April 1 through June 30 July 1 through September 30 October 1 through December 31
2/Year	Closest January 1 or July 1 before or after Order effective date [1]	January 1 through June 30 July 1 through December 31
1/Year	Closest January 1 before or after Order effective date [1]	January 1 through December 31

Footnote:

[1] Monitoring performed during the previous order term may be used to satisfy monitoring required by this Order.

4. **RL and MDL Reporting.** The Discharger shall report with each sample result the Reporting Level (RL) and Method Detection Limit (MDL) as determined by the procedure in 40 C.F.R. part 136. The Discharger shall report the results of analytical determinations for the presence of chemical constituents in a sample using the following reporting protocols:

   a. Sample results greater than or equal to the RL shall be reported as measured by the laboratory (i.e., the measured chemical concentration in the sample).

   b. Sample results less than the RL, but greater than or equal to the laboratory's MDL, shall be reported as "Detected, but Not Quantified," or DNQ. The estimated chemical concentration of the sample shall also be reported.

   For purposes of data collection, the laboratory shall write the estimated chemical concentration next to DNQ. The laboratory may, if such information is available, include numerical estimates of the data quality for the reported result. Numerical estimates of data quality may be percent accuracy (+/- a percentage of the reported value), numerical ranges (low to high), or any other means the laboratory considers appropriate.

   c. Sample results less than the laboratory's MDL shall be reported as "Not Detected" or ND.

   d. The Discharger shall instruct laboratories to establish calibration standards so that the minimum level (ML) value (or its equivalent if there is differential treatment of samples relative to calibration standards) is the lowest calibration standard. At no time is the Discharger to use analytical data derived from extrapolation beyond the lowest point of the calibration curve.

5. **Compliance Determination.** Compliance with effluent limitations for priority pollutants shall be determined using sample reporting protocols defined above and in the Fact Sheet and

Attachments A, D, and G. For purposes of reporting and administrative enforcement by the Regional Water Board and State Water Board, the Discharger shall be deemed out of compliance with effluent limitations if the concentration of the priority pollutant in the monitoring sample is greater than the effluent limitation and greater than or equal to the reporting level (RL).

C. Discharge Monitoring Reports (DMRs)

DMRs are U.S. EPA reporting requirements. The Discharger shall electronically certify and submit DMRs together with SMRs using the Electronic Self-Monitoring Reports module eSMR 2.5 or the latest upgraded version. Electronic DMR submittal shall be in addition to electronic SMR submittal. Information about electronic DMR submittal is available at the DMR website at:

http://www.waterboards.ca.gov/water_issues/programs/discharge_monitoring.

APPENDIX E-1
CHRONIC TOXICITY
DEFINITION OF TERMS AND SCREENING PHASE REQUIREMENTS

I. Definition of Terms

A. No observed effect level (NOEL) for compliance determination is equal to IC_{25} or EC_{25}. If the IC_{25} or EC_{25} cannot be statistically determined, the NOEL shall be equal to the NOEC derived using hypothesis testing.

B. Effective concentration (EC) is a point estimate of the toxicant concentration that would cause an adverse effect on a quantal, "all or nothing," response (such as death, immobilization, or serious incapacitation) in a given percent of the test organisms. If the effect is death or immobility, the term lethal concentration (LC) may be used. EC values may be calculated using point estimation techniques such as probit, logit, and Spearman-Karber. EC_{25} is the concentration of toxicant (in percent effluent) that causes a response in 25 percent of the test organisms.

C. Inhibition concentration (IC) is a point estimate of the toxicant concentration that would cause a given percent reduction in a nonlethal, nonquantal biological measurement, such as growth. For example, an IC_{25} is the estimated concentration of toxicant that would cause a 25 percent reduction in average young per female or growth. IC values may be calculated using a linear interpolation method such as U.S. EPA's Bootstrap Procedure.

D. No observed effect concentration (NOEC) is the highest tested concentration of an effluent or a toxicant at which no adverse effects are observed on the aquatic test organisms at a specific time of observation. It is determined using hypothesis testing.

II. Chronic Toxicity Screening Phase Requirements

A. The Discharger shall perform screening phase monitoring:

1. Subsequent to any significant change in the nature of the effluent discharged through changes in sources or treatment, except those changes resulting from reductions in pollutant concentrations attributable to source control efforts, or

2. Prior to permit reissuance. Screening phase monitoring data shall be included in the NPDES permit application for reissuance. The information shall be as recent as possible, but may be based on screening phase monitoring conducted within 5 years before the permit expiration date.

B. Design of the screening phase shall, at a minimum, consist of the following elements:

1. Use of test species specified in Appendix E-2, attached, and use of the protocols referenced in those tables.

2. Two stages:

a. Stage 1 shall consist of a minimum of one battery of tests conducted concurrently. Selection of the type of test species and minimum number of tests shall be based on Appendix E-2 (attached).

b. Stage 2 shall consist of a minimum of two test batteries conducted at a monthly frequency using the three most sensitive species based on the Stage 1 test results.

3. Appropriate controls.

4. Concurrent reference toxicant tests.

5. Dilution series of 100%, 50%, 25%, 12.5%, 6.25%, and 0 %, where "%" is percent effluent as discharged, or as otherwise approved the Executive Officer if different dilution ratios are needed to reflect discharge conditions.

C. The Discharger shall submit a screening phase proposal. The proposal shall address each of the elements listed above. If within 30 days, the Executive Officer does not comment, the Discharger shall commence with screening phase monitoring.

APPENDIX E-2
SUMMARY OF TOXICITY TEST SPECIES REQUIREMENTS

Table AE-1. Critical Life Stage Toxicity Tests for Estuarine Waters

Species	(Scientific Name)	Effect	Test Duration	Reference
Alga	*(Skeletonema costatum)* *(Thalassiosira pseudonana)*	Growth rate	4 days	1
Red alga	*(Champia parvula)*	Number of cystocarps	7–9 days	3
Giant kelp	*(Macrocystis pyrifera)*	Percent germination; germ tube length	48 hours	2
Abalone	*(Haliotis rufescens)*	Abnormal shell development	48 hours	2
Oyster Mussel	*(Crassostrea gigas)* *(Mytilus edulis)*	Abnormal shell development; percent survival	48 hours	2
Echinoderms - Urchins Sand dollar	*(Strongylocentrotus purpuratus, S. franciscanus)* *(Dendraster excentricus)*	Percent fertilization or larval development	1 hour or 72 hours	2
Shrimp	*(Americamysis bahia)*	Percent survival; growth	7 days	3
Shrimp	*(Holmesimysis costata)*	Percent survival; growth	7 days	2
Topsmelt	*(Atherinops affinis)*	Percent survival; growth	7 days	2
Silversides	*(Menidia beryllina)*	Larval growth rate; percent survival	7 days	3

Toxicity Test References:

1. American Society for Testing Materials (ASTM). 1990. Standard Guide for Conducting Static 96-Hour Toxicity Tests with Microalgae. Procedure E 1218-90. ASTM, Philadelphia, PA.

2. Short-term Methods for Estimating the Chronic Toxicity of Effluent and Receiving Waters to West Coast Marine and Estuarine Organisms. EPA/600/R-95/136. August 1995.

3. Short-term Methods for Estimating the Chronic Toxicity of Effluent and Receiving Waters to Marine and Estuarine Organisms. EPA/821/R-02/014. October 2002.

Table AE-2. Critical Life Stage Toxicity Tests for Fresh Waters

Species	(Scientific Name)	Effect	Test Duration	Reference
Fathead minnow	*(Pimephales promelas)*	Survival; growth rate	7 days	4
Water flea	*(Ceriodaphnia dubia)*	Survival; number of young	7 days	4
Alga	*(Selenastrum capricornutum)*	Final cell density	4 days	4

Toxicity Test Reference:

1. Short-term Methods for Estimating the Chronic Toxicity of Effluents and Receiving Waters to Freshwater Organisms, fourth Edition Chronic manual (EPA-821-R-02-013, October 2002).

Table AE-3. Toxicity Test Requirements for Stage One Screening Phase

Requirements	Discharges to Ocean	Discharges to Marine or Estuarine Water (San Francisco Bay [1])	Discharges to Freshwater [1]
Taxonomic diversity	1 plant 1 invertebrate 1 fish	1 plant 1 invertebrate 1 fish	1 plant 1 invertebrate 1 fish
Number of tests: Marine/Estuarine	4	3 or 4	0
Number of tests: Freshwater [2]	0	1 or 2	3
Total number of tests	4	5	3

[1] (a) Marine refers to receiving water salinities greater than 10 parts per thousand (ppt) at least 95 percent of the time during a normal water year.
(b) Freshwater refers to receiving water with salinities less than 1 ppt at least 95 percent of the time during a normal water year.
(c) Estuarine refers to receiving water salinities that fall between those of marine and freshwater, as described above.

[2] The freshwater species may be substituted with marine species if:
(a) The salinity of the effluent is above 1 ppt greater than 95 percent of the time, or
(b) The ionic strength (TDS or conductivity) of the effluent at the test concentration used to determine compliance is documented to be toxic to the test species.

ATTACHMENT F - FACT SHEET

Contents

I. Permit Information F-2
II. Facility Description F-3
  A. Discharge Points and Receiving Waters F-4
  B. Existing Wastewater Treatment and Controls F-4
  C. Summary of Existing Requirements and Monitoring Data F-5
  D. Compliance Summary F-7
III. Applicable Plans, Policies, and Regulations F-8
IV. Rationale For Effluent Limitations and Discharge Specifications F-11
  A. Discharge Prohibitions F-11
  B. Technology-Based Effluent Limitations F-13
  C. Water Quality-Based Effluent Limitations F-15
  D. Discharger Requirement Considerations F-25
V. Rationale for Receiving Water Limitations F-26
VI. Rationale for Provisions F-27
  A. Standard Provisions F-27
  B. Monitoring and Reporting F-27
  C. Special Provisions F-28
    1. Reopener Provisions F-28
    2. Effluent Characterization Study and Report F-28
    3. Pollutant Minimization Program F-28
    4. Receiving Water Data Reporting F-28
    5. Dry Season Discharge Requirements F-28
    6. Selenium in Fish Tissue Reasonable Potential Study F-28
VII. Monitoring and Reporting Program (MRP) F-29
VIII. Public Participation F-32

Tables

Table F-1. Facility Information F-2
Table F-2. Outfall Locations F-4
Table F-3. Historic Effluent Limitations and Monitoring Data F-5
Table F-4. Numeric Effluent Limitation Violations Since October 1, 2017 ..... F-8
Table F-5. Beneficial Uses F-9
Table F-6. Technology-Based Requirements for Cement Manufacturing and Mining F-13
Table F-7. Reasonable Potential Analysis F-20
Table F-8. WQBEL Calculations F-24
Table F-9. Monitoring Requirements Summary F-30

ATTACHMENT F – FACT SHEET

This Fact Sheet includes the legal requirements and technical rationale that serve as the basis for the requirements of this Order. As described in section II.B of this Order, the Regional Water Board incorporates this Fact Sheet as findings supporting the issuance of this Order.

I. PERMIT INFORMATION

The following table summarizes administrative information related to the facility:

Table F-1. Facility Information

WDID	2 43I006267
CIWQS Place ID	273205
Discharger	Lehigh Southwest Cement Company and Hanson Permanente Cement, Inc.
Facility Name	Permanente Plant
Facility Address	24001 Stevens Creek Blvd. Cupertino, CA 95014 Santa Clara County
Facility Contact, Title, Phone	Tressa Jackson, Area Environmental Manager, Lehigh Southwest Cement Company, 408-996-4233
Authorized Person to Sign and Submit Reports	Keith Krugh, Plant Manager, Lehigh Southwest Cement Company, 408-996-4231
Mailing Address	Lehigh Southwest Cement Company 24001 Stevens Creek Blvd. Cupertino, CA 95014
Billing Address	Same as Mailing Address
Facility Type	Industrial, SIC Codes 3241 (Hydraulic cement production), 1422 (Crushed and broken limestone)
Major or Minor Facility	Major
Threat to Water Quality	1
Complexity	A
Pretreatment Program	N
Reclamation Requirements	Order No. 94-038
Permitted Flow	167,000 gallons per hour (gph) (Discharge Point Nos. 001 and 007, combined)
Design Flow	167,000 gph (Discharge Point Nos. 001 and 007, combined)
Watershed	Santa Clara Basin
Receiving Water	Permanente Creek
Receiving Water Type	Inland Surface Water (Fresh)

A. Lehigh Southwest Cement Company operates the Permanente Plant (Facility), a limestone quarry and cement production facility that also produces construction aggregate. Hanson Permanente Cement, Inc., owns the property on which the Facility is located at 24001 Stevens Creek Road. Together, Lehigh Southwest Cement Company and Hanson Permanente Cement, Inc., are hereinafter referred to as the "Discharger." Site operations commenced in 1939.

For the purposes of this Order, references to the "discharger" or "permittee" in applicable federal and State laws, regulations, plans, or policies are held to be equivalent to references to the Discharger herein.

B. The Facility discharges wastewater to Permanente Creek, a water of the United States tributary to San Francisco Bay within the Santa Clara Basin watershed. The Facility also discharges stormwater runoff associated with industrial activities to Permanente Creek. Attachment B provides a map of the Facility and area around the Facility. Attachment C provides a site flow and treatment process schematic for the Facility.

The Discharger is regulated pursuant to National Pollutant Discharge Elimination System (NPDES) Permit No. CA0030210. The Discharger was previously subject to Order No. R2-2014-0010, which the Regional Water Board amended through Order No. R2-2017-0030 (together, the previous order). The Discharger filed a Report of Waste Discharge and submitted an application for reissuance of its Waste Discharge Requirements (WDRs) and NPDES permit on August 1, 2018.

The Discharger is authorized to discharge subject to the WDRs in this Order at the discharge locations described in Table 2 of this Order. Regulations at 40 C.F.R. section 122.46 limit the duration of NPDES permits to a fixed term not to exceed five years. Accordingly, Table 3 of this Order limits the effective period for the discharge authorization. Pursuant to California Code of Regulations, title 23, section 2235.4, the terms and conditions of an expired permit are automatically continued pending reissuance of the permit if the Discharger complies with all federal NPDES regulation requirements for continuation of expired permits.

C. The Discharger is also subject to Regional Water Board Order No. 94-038 for treatment and onsite discharge and reuse (or reclamation) of treated sanitary wastewaters. This Order does not affect Order No. 94-038.

D. When applicable, State law requires dischargers to file a petition with the State Water Resources Control Board (State Water Board), Division of Water Rights, and receive approval for any change in the point of discharge, place of use, or purpose of use of treated wastewater that decreases the flow in any portion of a watercourse. The State Water Board retains separate jurisdictional authority to enforce such requirements under Water Code section 1211. This is not an NPDES permit requirement.

II. FACILITY DESCRIPTION

The Discharger mines and processes minerals at the Facility and produces Portland cement and construction aggregate from limestone and other stone quarried onsite. It produces several types of wastewater, including quarry dewatering water, truck and equipment wash water, aggregate crushing and washing water, cement manufacture process wastewater, and industrial stormwater. This Order addresses all wastewater (including industrial stormwater) associated with quarrying, crushed rock mining and processing, and cement manufacture at the Facility.

The Facility consists of an active mining area, a quarry pit, a cement manufacturing plant, several crushers and mills, a pre-calcining tower, and roads and a conveyor system for transporting mined raw materials. Wastewater and industrial stormwater are collected and managed through a system of berms, ditches, pipes, and ponds. The ponds discharge to Permanente Creek at several locations. Runoff also occurs as sheet flow from undisturbed areas.

A. Discharge Points and Receiving Waters

The Facility discharges to Permanente Creek, a freshwater stream tributary to San Francisco Bay. All the Facility's discharges are shallow water discharges. The discharge points are located in the Santa Clara Basin watershed, as indicated below:

Table F-2. Outfall Locations

Discharge Point	Latitude (North)	Longitude (West)	Receiving Water
001	37.31713°	-122.11165°	Permanente Creek
002	37.31674°	-122.10167°	Permanente Creek
004	37.31431°	-122.08893°	Permanente Creek
005	37.31899°	-122.08716°	Permanente Creek
006	37.32241°	-122.08551°	Permanente Creek
007	37.31778°	-122.08750°	Permanente Creek

B. Existing Wastewater Treatment and Controls

The Facility's industrial wastewater treatment system, called the Final Treatment System (FTS), consists of two treatment trains, the Upper Treatment System (FTS-Upper), located near Pond 4A at the quarry pit crest, and the Lower Treatment System (FTS-Lower), located near Pond 11 and the Cement Plant (see Attachment B, Water System and Piping figure). Each treatment train includes ultrafiltration/reverse osmosis (UF/RO) units to remove dissolved solids and bioreactors to remove selenium and other metals. The bioreactors are a proprietary anaerobic attached growth system with a final filtration step. The FTS-Upper treatment capacity is 66,000 gallons per hour (gph); the FTS-Lower treatment capacity is 72,000 gph. The FTS-Upper discharges at Discharge Point No. 001; the FTS-Lower discharges at Discharge Point No. 007.

During normal operations, the Discharger pumps quarry dewatering water and stormwater collected in the quarry pit either to Pond 1250, then to the FTS-Upper; or to Tank 950, then to the FTS-Lower (see Attachment C). The Discharger may also use water from Pond 1250 for dust suppression on quarry roads. The Discharger directs process wastewater from the Cement Plant, Rock Plant, and Truck Wash, and stormwater from the Dinky Shed basin and Cement Plant area, to Pond 1, then to Pond 11. (The Dinky Shed basin collects stormwater from the Rock Plant access road and surrounding areas, along with stormwater from nearby roads.) The Discharger sends industrial stormwater from the Pond 30 area and Eastern Materials Storage Area (EMSA), subsurface flow intercepted by the EMSA French drain, bioreactor and UF/RO backwash water, and UF/RO concentrate directly to Pond 11. The Discharger either reclaims water collected in Pond 11 for use as process water or sends it to the quarry pit for treatment at either the FTS-Upper or FTS-Lower. During the rainy season, the Discharger may use the quarry pit as equalization storage to store water for later treatment and discharge.

The Discharger discharges stormwater that does not require treatment at the FTS to Permanente Creek at four other locations: Discharge Point Nos. 002 (from Pond 13B), 004 (from Pond 17), 005 (from Pond 20), and, as necessary, 006 (from Pond 30). Stormwater flows to these discharge points from the areas listed in Table 1 and are treated using stormwater Best Management Practices (BMPs). The Discharger has eliminated all process and industrial stormwater discharges to Pond 9; therefore, this Order no longer authorizes discharges from former Discharge Point No. 003 (Pond 9).

C. Summary of Existing Requirements and Monitoring Data

The table below presents the previous order's effluent limitations and representative monitoring data from the previous order term. There were no discharges from Discharge Point Nos. 002 or 007, so those discharge points are omitted from the table. The table includes metals data for Discharge Point Nos. 003 through 006, although those discharge points did not have effluent limits for metals.

Table F-3. Historic Effluent Limitations and Monitoring Data

Parameter	Units	Monthly Average Effluent Limitation	Daily Maximum Effluent Limitation	Instant-aneous Minimum Effluent Limitation	Instant-aneous Maximum Effluent Limitation	Highest Daily Discharge (05/14–07/18)
Discharge Point No. 001 (Pond 4A)						
Total Suspended Solids (TSS)	mg/L	—	—	—	—	270
Total Suspended Solids (TSS)	lbs/d	—	58	—	—	289
Oil and Grease	mg/L	10	20	—	—	ND (<1.7)
pH	s.u.	—	—	6.5	8.5	6.2 – 9.7
Total Residual Chlorine	mg/L	—	—	0.0	—	0.14
Settleable Matter	mL/L-hr	0.10	—	—	—	3.0
Chromium (VI)	µg/L	8.0	16	—	—	47
Mercury	µg/L	0.020	0.041	—	—	0.036
Nickel	µg/L	82	160	—	—	410
Selenium	µg/L	4.1	8.2	—	—	61
Thallium	µg/L	1.7	3.4	—	—	0.42
Total Dissolved Solids (TDS)	mg/L	1,000	2,000	—	—	1,400
Turbidity	NTU	5.0	10	—	—	137
Acute Toxicity	% Survival	[1]	[1]	[1]	[1]	100
Chronic Toxicity	TUc	[2]	[2]	[2]	[2]	61
Discharge Point No. 003 (Pond 9)						
TSS	mg/L	—	50	—	—	110
Oil and Grease	mg/L	10	20	—	—	ND (<1.7)
pH	s.u.	—	—	6.5	8.5	6.5 – 8.5
Settleable Matter	mL/L-hr	0.10	0.20	—	—	0.30
Chromium (VI)	µg/L	—	—	—	—	7.7
Mercury	µg/L	—	—	—	—	0.085
Nickel	µg/L	—	—	—	—	22
Selenium	µg/L	—	—	—	—	20
Thallium	µg/L	—	—	—	—	0.36
Turbidity	NTU	—	40	—	—	69
Discharge Point No. 004 (Pond 17)						
TSS	mg/L	—	50	—	—	1,700
Oil and Grease	mg/L	10	20	—	—	ND (<1.7)
pH	s.u.	—	—	6.5	8.5	7.1 – 8.8
Settleable Matter	mL/L-hr	0.10	0.20	—	—	0.90
Chromium (VI)	µg/L	—	—	—	—	27

Parameter	Units	Monthly Average Effluent Limitation	Daily Maximum Effluent Limitation	Instant-aneous Minimum Effluent Limitation	Instant-aneous Maximum Effluent Limitation	Highest Daily Discharge (05/14–07/18)
Mercury	µg/L	—	—	—	—	0.056
Nickel	µg/L	—	—	—	—	41
Selenium	µg/L	—	—	—	—	110
Thallium	µg/L	—	—	—	—	0.25
Turbidity	NTU	—	40	—	—	788
Discharge Point No. 005 (Pond 20)						
TSS	mg/L	—	50	—	—	11,000
Oil and Grease	mg/L	10	20	—	—	ND (<1.7)
pH	s.u.	—	—	6.5	8.5	6.1 – 10
Settleable Matter	mL/L-hr	0.10	0.20	—	—	80
Chromium (VI)	µg/L	—	—	—	—	150
Mercury	µg/L	—	—	—	—	5.2
Nickel	µg/L	—	—	—	—	1,200
Selenium	µg/L	—	—	—	—	57
Thallium	µg/L	—	—	—	—	5.2
Turbidity	NTU	—	40	—	—	2,355
Discharge Point No. 006 (Pond 30)						
TSS	mg/L	—	50	—	—	7,100
Oil and Grease	mg/L	—	—	—	—	ND (<1.7)
pH	s.u.	—	—	6.5	8.5	7.6 – 8.5
Settleable Matter	mL/L-hr	0.10	0.20	—	—	80
Chromium (VI)	µg/L	—	—	—	—	3.4
Mercury	µg/L	—	—	—	—	2.5
Nickel	µg/L	—	—	—	—	890
Selenium	µg/L	—	—	—	—	81
Thallium	µg/L	—	—	—	—	3.2
Turbidity	NTU	—	—	—	—	38

Unit Abbreviations:

TUc = chronic toxicity units
mg/L = milligrams per liter
µg/L = micrograms per liter
mL/L-hr = milliliters per liter–hour
NTU = nephelometric turbidity units
ND = non-detected
% Survival = percent survival
s.u. = standard units

Footnotes:

[1] The previous order imposed acute toxicity limits of a minimum single-sample survival percentage of 70 percent and a minimum three-sample median percent survival of 90 percent.

[2] The previous order did not impose chronic toxicity effluent limits. It did impose accelerated chronic toxicity monitoring triggers of a single-sample maximum of 2.0 TUc and a three-sample median of 1.0 TUc.

D. Compliance Summary

The Discharger's compliance record is summarized below:

1. **Cease and Desist Order.** Cease and Desist Order R2-2014-0002, as amended through Order No. R2-2017-0031, required tasks and a schedule for the Discharger to comply with the previous order by October 1, 2017. The tasks were corrective actions for foreseeable future violations and included the following:

   - Pilot-testing an Interim Treatment System (ITS) to treat Facility process wastewater, quarry water, and industrial wastewater discharges as necessary to meet the previous order's effluent limits, particularly for selenium, at Discharge Point No. 001.
   - Operating the ITS for up to 400 gallons per minute.
   - Constructing a Final Treatment System (FTS), based on the ITS, to treat all Facility discharges as necessary to comply with the previous order's effluent limits.
   - Reconfiguring Facility flows to send all water needing treatment to the FTS and Discharge Point No. 001, and to discharge only stormwater not needing further treatment at Discharge Point Nos. 002 through 006.
   - Installing and operating the FTS.

   The Cease and Desist Order also imposed interim limits while the Discharger completed these tasks.

2. **Administrative Civil Liabilities**

   a. **Administrative Civil Liability (ACL) No. R2-2017-1001.** On January 12, 2017, the Regional Water Board issued ACL No. R2-2017-1001, fining the Discharger $465,500 for numerous violations of the previous order's effluent limits and Cease and Desist Order interim limits that occurred in 2014 and 2015. The violations involved total suspended solids (TSS), settleable matter, turbidity, pH, and total residual chlorine discharged at Discharge Point Nos. 001, 003, 005, and 006.

   b. **ACL No. R2-2017-1023.** On August 14, 2017, the Regional Water Board issued ACL No. R2-2017-1023, fining the Discharger $375,000 for numerous violations of the previous order's effluent limits and Cease and Desist Order interim limits that occurred in 2016. The violations involved selenium, total dissolved solids (TDS), nickel, settleable matter, turbidity, and pH discharged at Discharge Point Nos. 001 and 005.

   c. **ACL No. R2-2018-1007.** On August 27, 2018, the Regional Water Board issued ACL No. R2-2018-1007, fining the Discharger $301,000 for violations that occurred from January 1 through October 1, 2017 (the date the Cease and Desist Order required full compliance with the previous order). The violations involved the following:

      - numerous violations of the previous order's effluent limits and Cease and Desist Order interim limits for selenium, TDS, nickel, TSS, settleable matter, turbidity, and pH discharged at Discharge Point Nos. 001, 004, and 005;
      - 21 violations of Cease and Desist Order interim limits on selenium, nickel, TDS, and turbidity in ITS effluent; and

- 15 unauthorized discharges from Pond 1 to Permanente Creek (violations of the previous order's discharge prohibitions).

3. **Compliance Since October 1, 2017.** The Discharger's performance improved substantially after completing the Cease and Desist Order tasks. Since October 1, 2017, the Discharger violated the previous order effluent limits just five times:

Table F-4. Numeric Effluent Limitation Violations Since October 1, 2017

Violation Date	Discharge Point No.	Parameter	Unit	Effluent Limitation	Reported Concentration
11/16/2017	005	TSS, Maximum Daily	mg/L	50	140
12/21/2017	001 [1]	Selenium, Maximum Daily	µg/L	8.2	15
03/22/2018	004	Turbidity, Maximum Daily	NTU	50	52
04/24/2019	001 [2]	Selenium, Maximum Daily	µg/L	8.2	9.3
04/31/2019	001 [2]	Selenium, Average Monthly	µg/L	4.1	9.3

Footnotes:

[1] This violation was detected in the effluent from the Upper FTS.

[2] This violation was detected in the effluent from the Lower FTS.

On May 21, 2019, the Regional Water Board issued Order No. R2-2019-1014, fining the Discharger $6,000 for the November and December 2017, and March 2018 violations above. Enforcement for the April 2019 violations is pending.

The Discharger also discharged 2,250 gallons of untreated truck wash water from Discharge Point No. 005 on May 8, 2018. This unauthorized discharge was caused by leaking fittings on a pipeline that was to convey truck wash water to Pond 1 and then to the FTS. The fittings had been loosened during pipeline maintenance and not re-tightened. The Discharger noticed the leaking fittings about one hour after completing the maintenance, tightened the fittings, and stopped the leak.

III. APPLICABLE PLANS, POLICIES, AND REGULATIONS

A. **Legal Authorities.** This Order serves as WDRs pursuant to Water Code article 4, chapter 4, division 7 (commencing with § 13260). This Order is also issued pursuant to Clean Water Act (CWA) section 402 and implementing regulations adopted by U.S. EPA, and Water Code chapter 5.5, division 7 (commencing with § 13370). It shall serve as an NPDES permit authorizing the Discharger to discharge into waters of the United States at the discharge locations described in Table 2 subject to the WDRs in this Order.

B. California Environmental Quality Act. Under Water Code section 13389, this action to adopt an NPDES permit is exempt from the provisions of the California Environmental Quality Act (CEQA), Public Resources Code division 13, chapter 3 (commencing with § 21100).

C. State and Federal Regulations, Policies, and Plans

1. **Water Quality Control Plan.** The San Francisco Bay Regional Water Board (Regional Water Board) adopted *The Water Quality Control Plan for the San Francisco Bay Basin* (hereinafter Basin Plan) that designates beneficial uses, establishes water quality objectives, and contains implementation programs and policies to achieve those objectives for all waters addressed through the plan. Requirements in this Order implement the Basin Plan. In addition, State Water Board Resolution 88-63 established State policy that all waters, with certain exceptions, should be considered suitable or potentially suitable for municipal or domestic supply. Permanente Creek does not meet any of the exceptions under State Water Board Resolution 88-63. Therefore, the municipal or domestic supply beneficial use applies. Beneficial uses applicable to Permanente Creek are as follows:

Table F-5. Beneficial Uses

Discharge Points	Receiving Water	Beneficial Uses
001 002 004 005 006 007	Permanente Creek	Groundwater recharge (GWR) Cold freshwater habitat (COLD) Warm freshwater habitat (WARM) Preservation of rare, threatened or endangered species (RARE) Fish spawning (SPWN) Wildlife habitat (WILD) Contact water recreation (REC-1) Non-contact water recreation (REC-2) Municipal and domestic water supply (MUN)

2. **National Toxics Rule (NTR) and California Toxics Rule (CTR).** U.S. EPA adopted the NTR on December 22, 1992, and amended it on May 4, 1995, and November 9, 1999. About 40 criteria in the NTR apply in California. On May 18, 2000, U.S. EPA adopted the CTR. The CTR promulgated new toxics criteria for California and incorporated the previously adopted NTR criteria that applied in the State. U.S. EPA amended the CTR on February 13, 2001. These rules contain water quality criteria for priority pollutants.

3. **State Implementation Policy.** On March 2, 2000, the State Water Board adopted the *Policy for Implementation of Toxics Standards for Inland Surface Waters, Enclosed Bays, and Estuaries of California* (State Implementation Policy or SIP). The SIP became effective on April 28, 2000, with respect to the priority pollutant criteria U.S. EPA promulgated for California through the NTR and the priority pollutant objectives the Regional Water Board established in the Basin Plan. The SIP became effective on May 18, 2000, with respect to the priority pollutant criteria U.S. EPA promulgated through the CTR. The State Water Board adopted amendments to the SIP on February 24, 2005, that became effective on July 13, 2005. The SIP establishes implementation provisions for priority pollutant criteria and objectives, and provisions for chronic toxicity control. Requirements of this Order implement the SIP.

4. **Antidegradation Policy.** Federal regulations at 40 C.F.R. section 131.12 requires that state water quality standards include an antidegradation policy consistent with the federal policy.

The State Water Board established California's antidegradation policy through State Water Board Resolution 68-16, which is deemed to incorporate the federal antidegradation policy where the federal policy applies under federal law. Resolution 68-16 requires that existing water quality be maintained unless degradation is justified based on specific findings. The Basin Plan implements, and incorporates by reference, both the State and federal antidegradation policies. Permitted discharges must be consistent with the antidegradation provisions of 40 C.F.R. section 131.12 and State Water Board Resolution 68-16. (See Fact Sheet § IV.D.1 Antidegradation.)

5. **Domestic Water Quality.** In accordance with Water Code section 106.3, it is the policy of the State of California is that every human being has the right to safe, clean, affordable, and accessible water adequate for human consumption, cooking, and sanitary purposes. This Order complies with that policy by requiring discharges to meet maximum contaminant levels (MCLs) designed to protect human health and ensure that water is safe for domestic use.

6. **Anti-Backsliding Requirements.** CWA sections 402(o) and 303(d)(4) and 40 C.F.R. section 122.44(l) restrict backsliding in NPDES permits. These anti-backsliding provisions require that effluent limitations in a reissued permit be as stringent as those in the previous permit, with some exceptions in which limitations may be relaxed. (See Fact Sheet § IV.D.2 Anti-Backsliding.)

7. **Endangered Species Act Requirements.** This Order does not authorize any act that results in the taking of a threatened or endangered species or any act that is now prohibited, or becomes prohibited in the future, under either the California Endangered Species Act (Fish and Game Code §§ 2050 to 2097) or the Federal Endangered Species Act (16 U.S.C.A. §§ 1531 to 1544). This Order requires compliance with effluent limits, receiving water limits, and other requirements to protect beneficial uses, including protecting rare, threatened, or endangered species. The Discharger is responsible for meeting all applicable Endangered Species Act requirements.

8. **Mercury Provisions.** On May 2, 2017, the State Water Board adopted Resolution 2017-0027, which approved *Final Part 2 of the Water Quality Control Plan for Inland Surface Waters, Enclosed Bays, and Estuaries of California—Tribal and Subsistence Fishing Beneficial Uses and Mercury Provisions* (Mercury Provisions), thereby establishing water quality objectives for mercury in most State waters. The Mercury Provisions (section III.D.3) supersede the freshwater mercury water quality objectives in Basin Plan Table 3-4. Requirements of this Order implement the Mercury Provisions.

D. **Impaired Waters on CWA 303(d) List.** In April 2018, U.S. EPA approved a revised list of impaired waters prepared pursuant to CWA section 303(d), which requires identification of specific water bodies where it is expected that water quality standards will not be met after implementation of technology-based effluent limitations on point sources. Where necessary, the Regional Water Board plans to adopt Total Maximum Daily Loads (TMDLs) for waters on the 303(d) list to establish wasteload allocations for point sources and load allocations for nonpoint sources and thus achieve the water quality standards. Permanente Creek is listed as impaired due to selenium, diazinon, toxicity, and trash:

1. **Selenium.** Available information suggests that Facility discharges are the predominant source of selenium in Permanente Creek. The Regional Water Board intends to resolve the

selenium impairment by adopting this Order, which contains effluent limitations and requires implementation of BMPs sufficient to achieve water quality standards in Permanente Creek. This Order also contains monitoring and reporting requirements to allow the Regional Water Board to evaluate progress toward achieving the water quality standards and eliminating the impairment.

2. **Diazinon and Toxicity.** On May 16, 2007, U.S. EPA approved a TMDL for diazinon (a pesticide) and pesticide-related toxicity in urban creeks as set forth in Basin Plan section 7.1.1. The TMDL allocates the entire wasteload allocations for diazinon and pesticide-related toxicity to municipal stormwater. Available data do not indicate that Facility discharges contain diazinon or pesticide-related toxicity. As explained in Fact Sheet section IV.C.3.f, Facility discharges do not pose a reasonable potential to cause or contribute to exceedance of the Basin Plan's toxicity objective. Nevertheless, this Order requires toxicity monitoring to ensure that any potential sources of toxicity other than pesticides are identified and resolved.

3. **Trash.** Facility discharges are not a source of trash to Permanente Creek. The Regional Water Board addressed the trash impairment when it reissued the Municipal Separate Storm Sewer System NPDES permit (NPDES Permit No. CAS612008).

IV. RATIONALE FOR EFFLUENT LIMITATIONS AND DISCHARGE SPECIFICATIONS

The Clean Water Act requires point source dischargers to control the amount of conventional, non-conventional, and toxic pollutants discharged into waters of the United States. The control of pollutants discharged is established through effluent limitations and other requirements in NPDES permits. There are two principal bases for effluent limitations: 40 C.F.R. section 122.44(a) requires that permits include applicable technology-based limitations and standards; and 40 C.F.R. section 122.44(d) requires that permits include water quality-based effluent limitations to attain and maintain applicable numeric and narrative water quality criteria to protect the beneficial uses of receiving waters.

A. Discharge Prohibitions

1. Prohibitions in this Order

a. **Discharge Prohibition III.A** (No discharge other than as described in this Order): This prohibition is based on 40 C.F.R. section 122.21(a), duty to apply, and Water Code section 13260, which requires filing an application and Report of Waste Discharge before discharges can occur. Discharges not described in the permit application and Report of Waste Discharge, and subsequently in this Order, are prohibited.

b. **Discharge Prohibition III.B** (No flow above 167,000 gph at Discharge Point Nos. 001 and 007 combined): This prohibition ensures that wastewater flows do not exceed the design capacity of the wastewater treatment system.

c. **Discharge Prohibition III.C** (No discharge other than that due to precipitation at Discharge Point Nos. 002 and 004 through 006): This prohibition ensures that these discharge points only discharge stormwater.

d. Discharge Prohibition III.D (No discharge of kiln exhaust cooling water): This prohibition ensures that elevated temperature wastewater will not be discharged to Permanente Creek. During normal plant operations all kiln exhaust cooling water is evaporated. Because this Order includes this prohibition, an effluent temperature limitation is unnecessary.

2. Exception to Shallow Water Discharge Prohibition. Basin Plan Table 4-1, Discharge Prohibition 1, prohibits discharges not receiving a minimum of 10:1 initial dilution. Basin Plan section 4.2 provides for exceptions under certain circumstances:

- An inordinate burden would be placed on the Discharger relative to the beneficial uses protected, and an equivalent level of environmental protection can be achieved by alternate means;
- A discharge is approved as part of a reclamation project;
- Net environmental benefits will be derived as a result of the discharge; or
- A discharge is approved as part of a groundwater cleanup project.

The Basin Plan further states:

> Significant factors to be considered by the Regional Water Board in reviewing requests for exceptions will be the reliability of the discharger's system in preventing inadequately treated wastewater from being discharged to the receiving water and the environmental consequences of such discharges.

This Order grants an exception for discharges to Permanente Creek for the following reasons:

a. An inordinate burden would be placed on the Discharger relative to the beneficial uses protected to require the discharge to achieve 10:1 dilution in Permanente Creek. Upstream flow in Permanente Creek is insufficient to achieve 10:1 dilution consistently throughout the year, and constructing and operating a deepwater outfall to provide consistent dilution (e.g., in San Francisco Bay) would require construction and operation of a discharge pipe several miles long.

b. For treated wastewater discharges from Discharge Point Nos. 001 and 007, the Discharger will provide an equivalent level of environmental protection through advanced treatment to minimize pollutants and comply with this Order's stringent effluent limitations. Furthermore, the Discharger will be able to contain untreated or partially treated wastewater in the quarry pit in case of possible treatment upset, allowing it to be re-routed for treatment prior to discharge.

c. For stormwater discharges from Discharge Point Nos. 002 and 004 through 006, Provision VI.A.3 of this Order and Attachment S require the Discharger to provide an equivalent level of environmental protection by developing and implementing BMPs reflecting best industry practice considering technological availability and economic practicability to comply with effluent limits and minimize pollutants in stormwater.

B. Technology-Based Effluent Limitations

1. Scope and Authority

CWA section 301(b) and 40 C.F.R. section 122.44 require that permits include conditions meeting technology-based requirements at a minimum and any more stringent effluent limitations necessary to meet water quality standards. The discharges this Order authorizes must meet minimum federal technology-based requirements based on U.S. EPA-promulgated Effluent Limitations Guidelines for the Cement Manufacturing Point Source Category at 40 C.F.R. section 411 and the Mining Point Source Category at 40 C.F.R. section 436. The effluent limitations established by these codes and their applicability to the discharges permitted by this Order are summarized below and in Table F-5:

- Regulations at 40 C.F.R. section 411 subpart A (Nonleaching Subcategory) apply to process wastewater from nonleaching cement manufacturing directed to Discharge Point Nos. 001 and 007.
- Regulations at 40 C.F.R. section 411 subpart C (Materials Storage Piles Runoff Subcategory) apply to Discharge Point Nos. 001, 002, and 004 through 007 because these discharges contain runoff from raw materials, intermediate products, finished products, or waste materials.
- Regulations at 40 C.F.R. section 436 subparts B (Crushed Stone Subcategory) and C (Construction Sand and Gravel Subcategory) apply to Discharge Point Nos. 001 and 007 because these discharges contain mine dewatering water or wastewater associated with mining and processing crushed stone, such as the limestone used in cement manufacturing and the construction aggregate produced at the Facility.

The requirements of these Effluent Limit Guidelines are summarized below. The Basin Plan contains additional requirements for certain pollutants.

Table F-6. Technology-Based Requirements for Cement Manufacturing and Mining

Parameter	Maximum Daily Effluent Limitation
40 C.F.R. section 411 subpart A *(applicable to Discharge Point Nos. 001 and 007)*	
Total Suspended Solids (TSS) (process wastewater)	0.0050 pounds per 1,000 pounds product
Temperature [1]	Not to exceed 3°C rise above inlet temperature
40 C.F.R. section 411 subpart C *(applicable to Discharge Point Nos. 001, 002, and 004 through 007)*	
TSS (runoff) [2]	50 mg/L
pH	6.0 – 9.0 standard units
40 C.F.R. section 436 subparts B and C *(applicable to Discharge Point Nos. 001 and 007)*	
pH	6.0 – 9.0 standard units

Footnotes:

[1] Because Facility cooling water is evaporated after use and not discharged, this Order does not implement this limit.

[2] Untreated overflow from facilities designed, constructed, and operated to treat the volume of runoff from materials storage associated with a 10-year 24-hour rain event is not subject to this limitation. Because none of the Facility's ponds meet these conditions, all discharges covered by this Order are subject to this limitation.

2. Effluent Limitations

Rationales for this Order's technology-based effluent limitations are presented below:

a. Discharge Point Nos. 001 and 007

Discharges from Discharge Point Nos. 001 and 007 are subject to the Effluent Limitation Guidelines as set forth in Table F-6.

i. Total Suspended Solids (TSS). The TSS effluent limitation applies to the combined discharge from Discharge Point Nos. 001 and 007, monitored at Monitoring Locations EFF-001 and EFF-007, and is based on the rate of cement production in accordance with 40 C.F.R. section 411 subpart A (Non-leaching Subcategory). The Discharger's Report of Waste Discharge reports its production rate as 11,520,000 pounds (lbs) of Portland cement per day. The maximum daily TSS limit is therefore calculated as follows:

11,520,000 lbs cement /day x 0.005 lbs TSS / 1,000 lbs cement = 58 lbs/day TSS

This Order does not contain the TSS effluent limitations in Basin Plan Table 4-2 because the Basin Plan states, "[the TSS limits] will not be used to preempt Effluent Guideline Limitations."

ii. Oil and Grease. The oil and grease effluent limitations are based on Basin Plan Table 4-2.

iii. pH. The pH effluent limitations are based on Basin Plan Table 4-2, which is more stringent than 40 C.F.R. sections 411 and 436.

iv. Total Residual Chlorine. The total residual chlorine effluent limitation is based on Basin Plan Table 4-2. Chlorine may be present when potable water is used onsite as make-up Primary Crusher wash water, Rock Plant wash water, Truck Wash water, or dust suppression water.

v. Settleable Matter. The settleable matter effluent limitations are based on Basin Plan Table 4-2.

b. Discharge Point Nos. 002, 004, 005, and 006

Discharges from Discharge Point Nos. 002, 004, 005, and 006 are subject to the Effluent Limitation Guidelines in 40 C.F.R. section 411 subpart C (Materials Storage Piles Runoff Subcategory).

i. Total Suspended Solids (TSS). The TSS effluent limitation is based on 40 C.F.R. section 411, Subpart C (Materials Storage Piles Runoff Subcategory). This Order does not contain the TSS effluent limitations in Basin Plan Table 4-2 because the Basin Plan states, "[the TSS limits] will not be used to preempt Effluent Guideline Limitations."

ii. Oil and Grease. The oil and grease effluent limitations are based on Basin Plan Table 4-2.

iii. **pH.** The pH effluent limitations are based on Basin Plan Table 4-2, which is more stringent than 40 C.F.R. sections 411 and 436.

iv. **Settleable Matter.** The settleable matter effluent limitations are based on Basin Plan Table 4-2.

C. Water Quality-Based Effluent Limitations

1. Scope and Authority

This Order contains water quality-based effluent limitations (WQBELs) that protect beneficial uses. CWA section 301(b) and 40 C.F.R. section 122.44(d) require that permits include limitations more stringent than federal technology-based requirements where necessary to achieve applicable water quality standards. According to 40 C.F.R. section 122.44(d)(1)(i), permits must include effluent limitations for all pollutants that are or may be discharged at levels that have a reasonable potential to cause or contribute to an exceedance of a water quality standard, including numeric and narrative objectives within a standard. Where reasonable potential has been established for a pollutant, but there is no numeric criterion or objective, WQBELs must be established using (1) U.S. EPA criteria guidance under CWA section 304(a), supplemented where necessary by other relevant information; (2) an indicator parameter for the pollutant of concern; or (3) a calculated numeric water quality criterion, such as a proposed state criterion or policy interpreting a narrative criterion, supplemented with relevant information (40 C.F.R. § 122.44[d][1][vi]). The process for determining reasonable potential and calculating WQBELs is intended to achieve applicable water quality objectives and criteria and protect designated uses of receiving waters as specified in the Basin Plan. When numeric effluent limitations are infeasible, 40 C.F.R. part 122.44(k) allows WQBELs to be expressed narratively, such as through BMPs.

2. Beneficial Uses and Water Quality Criteria and Objectives

Discharge Point Nos. 001, 002, and 004 through 007 discharge to Permanente Creek. Fact Sheet section III.C.1, above, identifies the beneficial uses of Permanente Creek. Water quality criteria and objectives to protect these beneficial uses are described below:

a. **Basin Plan Objectives.** The Basin Plan specifies numerous water quality objectives, such as numeric objectives for 10 priority pollutants and un-ionized ammonia, and narrative objectives for toxicity and bioaccumulation. Because Permanente Creek has the MUN beneficial use based on State Water Board Resolution No. 88-63 (see Fact Sheet § III.C.1), drinking water standards (i.e., maximum contaminant levels) also apply as water quality objectives.

i. **Ammonia.** Basin Plan section 3.3.20 contains a water quality objective for un-ionized ammonia of 0.025 mg/L as an annual median for San Francisco Bay region receiving waters. Effluent and receiving water data are available for total ammonia, but not un-ionized ammonia, because (1) sampling and laboratory methods are unavailable to analyze for un-ionized ammonia, and (2) the fraction of total ammonia that exists in the toxic un-ionized form depends on pH, salinity, and temperature of the receiving water.

To translate the un-ionized ammonia objectives into total ammonia criteria, pH, salinity, and temperature data collected at Monitoring Location RSW-001A from March 2016 through July 2018 were used. The un-ionized fraction of total ammonia was calculated using the following equation, which applies to waters with salinities less than 1 part per thousand (ppt) (*Ambient Water Quality Criteria for Ammonia (Saltwater)–1989*, EPA Publication 440/5-88-004, 1989):

For salinity < 1 ppt: fraction of NH_3 = $\frac{1}{1+10^{(pK-pH)}}$

Where:

pK = 0.09018 + 2729.92/(T)
T = temperature in Kelvin

The median un-ionized ammonia fraction was then used to express the annual average un-ionized objective as a chronic total ammonia criterion. This approach is consistent with U.S. EPA guidance on translating dissolved metal water quality objectives to total recoverable metal water quality criteria (U.S. EPA, 1996, *The Metals Translator: Guidance for Calculating a Total Recoverable Limit form a Dissolved Criterion*, EPA Publication 823-B96-007). The equivalent chronic total ammonia criterion is 1.2 mg/L.

ii. Dioxin-TEQ. The narrative bioaccumulation objective (Basin Plan section 3.3.2) states, "Many pollutants can accumulate on particulates, in sediments, or bioaccumulate in fish and other aquatic organisms. Controllable water quality factors shall not cause a detrimental increase in concentrations of toxic substances found in bottom sediments or aquatic life. Effects on aquatic organisms, wildlife, and human health will be considered." Because it is the consensus of the scientific community that dioxins and furans associate with particulates, accumulate in sediments, and bioaccumulate in the fatty tissue of fish and other organisms, the Basin Plan's narrative bioaccumulation water quality objective applies to these pollutants. Elevated levels of dioxins and furans in San Francisco Bay fish tissue demonstrate that the narrative bioaccumulation water quality objective is not being met. U.S. EPA has therefore placed Lower San Francisco Bay on its 303(d) list of receiving waters where water quality objectives are not being met after imposition of applicable technology-based requirements.

When the CTR was promulgated, U.S. EPA stated its support for the regulation of dioxin and dioxin-like compounds through the use of toxicity equivalencies (TEQs). U.S. EPA stated, "For California waters, if the discharge of dioxin or dioxin-like compounds has reasonable potential to cause or contribute to a violation of a narrative criterion, numeric WQBELs for dioxin or dioxin-like compounds should be included in NPDES permits and should be expressed using a TEQ scheme" (Fed. Reg. Vol. 65, No. 97, pages 31695-31696, May 18, 2000). This Order uses a TEQ scheme based on a set of toxicity equivalency factors (TEFs) the World Health Organization developed in 2005, and a set of bioaccumulation equivalency factors (BEFs) U.S. EPA developed for the Great Lakes region (40 C.F.R. § 132, Appendix F) to convert the concentration of any congener of dioxin or furan into an equivalent concentration of 2,3,7,8-tetrachlorinated dibenzo-p-dioxin (2,3,7,8-TCDD). Although the 2005 World

Health Organization scheme includes TEFs for dioxin-like PCBs, they are not included in this Order's TEQ scheme. The CTR has established a specific water quality criterion for PCBs, and dioxin-like PCBs are included in the analysis of total PCBs.

The CTR establishes a numeric water quality objective for 2,3,7,8-TCDD of 1.4×10^{-8} µg/L for the protection of human health when aquatic organisms are consumed. This CTR criterion is used as a criterion for dioxin TEQ because dioxin-TEQ represents a toxicity-weighted concentration equivalent to 2,3,7,8-TCDD, thus translating the narrative bioaccumulation objective into a numeric criterion.

iii. **Chronic Toxicity.** The narrative toxicity objective (Basin Plan section 3.3.18) states, "All waters shall be maintained free of toxic substances in concentrations that are lethal to or that produce other detrimental responses in aquatic organisms.... There shall be no chronic toxicity in ambient waters. Chronic toxicity is a detrimental biological effect on growth rate, reproduction, fertilization success, larval development, population abundance, community composition, or any other relevant measure of the health of an organism, population, or community. Attainment of this objective will be determined by analyses of indicator organisms, species diversity, population density, growth anomalies, or toxicity tests…, or other methods selected by the Water Board."

For this Order, this narrative objective is translated into a numeric criterion of 1.0 chronic toxicity unit (TUc). At 1.0 TUc, there is no observable detrimental effect when the indicator organism is exposed to 100 percent effluent; therefore, 1.0 TUc is a direct translation of the narrative objective into a number. Moreover, in U.S. EPA's *Technical Support Document for Water Quality-based Toxics Control* (Technical Support Document) (EPA/505/2-90-001, March 1991; see section 3.3.3, *Step 3: Decision Criteria for Permit Limit Development*), U.S. EPA recommends that 1.0 TUc be used as a criterion continuous concentration (typically a four-day average). It further states that reasonable potential is shown where an effluent is projected to cause an excursion above the criterion continuous concentration. This document applies here as guidance because it directly addresses effluent characterization for toxicity.

iv. **Temperature.** Permanente Creek supports warm water and cold water habitat beneficial uses; therefore, the temperature water quality objectives in Basin Plan section 3.3.17 apply:

- The natural receiving water temperature of inland surface waters shall not be altered unless it can be demonstrated to the satisfaction of the Regional Board that such alteration in temperature does not adversely affect beneficial uses.
- The temperature of any cold or warm freshwater habitat shall not be increased by more than 5°F [degrees Fahrenheit] (2.8°C [degrees Celsius]) above natural receiving water temperature.

b. **Mercury Provisions Objectives.** The Mercury Provisions specify water column criteria for mercury depending on water body type and beneficial uses. Permanente Creek is a flowing water body that supports cold freshwater habitat; warm freshwater habitat; preservation of rare, threatened, or endangered species; and wildlife habitat beneficial uses. Mercury Provisions section IV.D.2.b, Table 1, establish an annual average total mercury criterion of 0.012 µg/L for Permanente Creek water.

c. **California Toxics Rule Criteria.** The CTR specifies numeric aquatic life and human health criteria for numerous priority pollutants. These criteria apply to inland surface waters and enclosed bays and estuaries. Some human health criteria are for consumption of "water and organisms" and others are for consumption of "organisms only." The CTR criteria applicable to "water and organisms" apply to Permanente Creek because it is considered a potential source of drinking water, as described in Fact Sheet section III.C.1, above.

d. **National Toxics Rule Criteria.** The NTR establishes numeric aquatic life and human health criteria for a number of toxic pollutants for San Francisco Bay waters upstream to and including Suisun Bay and the Sacramento-San Joaquin Delta. The NTR criteria apply to Permanente Creek.

e. **Receiving Water Salinity.** Basin Plan section 4.6.2 (like the CTR and NTR) states that the salinity characteristics (i.e., freshwater versus saltwater) of the receiving water are to be considered in determining the applicable water quality objectives. Freshwater criteria apply to discharges to waters with salinities equal to or less than one part per thousand (ppt) at least 95 percent of the time. Saltwater criteria apply to discharges to waters with salinities equal to or greater than 10 ppt at least 95 percent of the time in a normal water year. For discharges to waters with salinities between these two categories, or tidally-influenced freshwaters that support estuarine beneficial uses, the water quality objectives are the lower of the salt or freshwater objectives (the latter calculated based on ambient hardness) for each substance.

   Permanente Creek is an inland freshwater stream as confirmed by salinity data collected in from 2014 through 2018. No salinity greater than 1 ppt was detected in any sample. Permanente Creek is therefore classified as freshwater, and the reasonable potential analysis and WQBELs are based on freshwater water quality criteria and objectives.

f. **Receiving Water Hardness.** Ambient hardness data are used to calculate freshwater water quality objectives that are hardness dependent. The water quality objectives for this Order are based on a hardness of 280 mg/L as $CaCO_3$, which is the geometric mean of observed hardness at the confluence of Wild Violet Creek and Permanente Creek (Monitoring Location RSW-001A as defined in the Monitoring and Reporting Program).

3. Need for Water Quality-Based Effluent Limitations (Reasonable Potential Analysis)

Assessing whether a pollutant has reasonable potential to cause or contribute to exceedances of a water quality objective is the fundamental step in determining whether a WQBEL is required. The reasonable potential analysis presented below applies to Discharge Point Nos. 001 and 007, where process wastewaters are actively generated and discharged. These process wastewater discharges are subject to numeric WQBELs where reasonable potential is

indicated. Stormwater discharges from Discharge Point Nos. 002 and 004 through 006 are subject to narrative WQBELs.

a. Methodology. State Implementation Policy section 1.3 sets forth the methodology used for this Order for assessing whether a priority pollutant has reasonable potential to exceed a water quality objective. SIP section 1.3 applies to priority pollutants and is used here for dioxin-TEQ, ammonia, total dissolved solids, turbidity, chloride, and phenols, as guidance. The analysis begins with identifying the maximum effluent concentration (MEC) observed for each pollutant based on available effluent concentration data and the ambient background concentration (B). State Implementation Policy section 1.4.3 states that ambient background concentrations are either the maximum ambient concentration observed or, for water quality objectives intended to protect human health, the arithmetic mean of observed concentrations. There are three triggers in determining reasonable potential:

i. Trigger 1 is activated if the maximum effluent concentration is greater than or equal to the lowest applicable water quality objective (MEC $\geq$ water quality objective).

ii. Trigger 2 is activated if the ambient background concentration observed in the receiving water is greater than the water quality objective (B > water quality objective) *and* the pollutant is detected in any effluent sample.

iii. Trigger 3 is activated if a review of other information indicates that a WQBEL is needed to protect beneficial uses.

The Mercury Provisions (section IV.D.2.c) modify SIP section 1.3 for mercury. The maximum effluent concentration and ambient background concentration are maximum annual averages, calculated as the arithmetic mean over each calendar year, with non-detect results estimated as half the method detection limit.

b. Effluent Data. The reasonable potential analysis for this Order is based on effluent data from Discharge Point No. 001 that the Discharger collected from October 2017 through July 2018, after the FTS was installed, for most inorganics, and from December 2014 through April 2017, the latest data available, for most organics. For Mercury, effluent data from Discharge Point No. 001 collected from May 2014 through July 2018 are considered because they are reasonably representative relative to the mercury water quality objective and allow calculation of annual averages.

All the Facility's process wastewaters, including those currently discharged from Discharge Point No. 001, will be treated by the FTS and discharged from Discharge Point Nos. 001 and 007. Therefore, while the reasonable potential analysis is based on data from Discharge Point No. 001, the analysis conclusions and any resulting limits apply to both Discharge Point Nos. 001 and 007.

.

c. Ambient Background Data. The reasonable potential analysis for this Order is based on background data collected from May 2014 through July 2018 at Monitoring Location RSW-001A. This location was chosen based on its accessibility, geological appropriateness, likely perennial flow, and lack of chemical influences from the Facility or other land uses (*Background Monitoring Locations Plan and Reporting, Water Code*

section 13267 Order No. R2-2013-1005, Order Item No. 6, Golder Associates, March 6, 2013).

d. **Reasonable Potential Analysis.** The maximum effluent concentrations, most stringent applicable water quality criteria and objectives, and ambient background concentrations used in the analysis are presented in the following table, along with the reasonable potential analysis results (yes or no) for each pollutant. The pollutants that exhibit reasonable potential are antimony, chromium (VI), and selenium.

We find that chromium (VI) has a reasonable potential to be discharged at a concentration that could cause or contribute to an exceedance of water quality objectives in Permanente Creek by Trigger 3, above, based on a combination of factors. While chromium (VI) has not been discharged in excess of its water quality objectives since the Discharger installed the FTS, sufficient information is not yet available to fully assess FTS performance and reliability. The Discharger has operated the FTS for less than twelve months during two normal rainy seasons (the Discharger does not operate the FTS during the dry season). The FTS is complex and, while capable of meeting stringent limits for metals, has not been used to meet effluent limitations as stringent as those in this Order or the previous order at other sites. Standard operating procedures are therefore unavailable from the manufacturer and the Discharger has had to refine its treatment operations to meet these limits. Chromium (VI) is potentially toxic if insufficiently treated, and the discharge receives no dilution. Moreover, chromium (VI) is a potential drinking water contaminant, and Permanente Creek's beneficial uses include municipal supply and groundwater recharge (see Fact Sheet Table F-5), which are of particular community concern. Also, the Discharger has a history of compliance problems, despite its improved performance.

Table F-7. Reasonable Potential Analysis

CTR #	Pollutant	C or Governing Criterion or Objective (µg/L)	MEC or Minimum DL [1][2] (µg/L)	B or Minimum DL [1][2] (µg/L)	Result [3]
1	**Antimony**	**6.0**	**7.3**	**< 0.11**	**Yes**
2	Arsenic	10	7	0.94	No
3	Beryllium	4.0	0.42	< 0.14	No
4	Cadmium	2.5	1.3	< 0.11	No
5a	Chromium (III)	50	41	< 5.0	No
5b	**Chromium (VI)**	**11**	**4.7**	**0.66**	**Yes**
6	Copper	22	6.5	1.5	No
7	Lead	12	0.13	1.7	No
8	Mercury [4]	0.012	0.0075	0.0063	No
9	Nickel	100	41	2.6	No
10	**Selenium**	**5.0**	**15**	**0.68**	**Yes**
11	Silver	24	< 0.020	0.15	No
12	Thallium	1.7	< 0.10	< 0.10	No
13	Zinc	287	160	8.5	No
14	Cyanide	5.2	< 1.4	88	No
15	Asbestos	7,000,000	< 0.19	< 0.19	No
16	2,3,7,8-TCDD (Dioxin)	1.30E-08	< 1.3E-07	< 1.4E-07	U
17	Acrolein	320	< 1.0	< 1.0	No
18	Acrylonitrile	0.059	< 0.15	< 0.40	U
19	Benzene	1.0	< 0.053	< 0.050	No
20	Bromoform	4.3	< 0.050	< 0.050	No
21	Carbon Tetrachloride	0.25	< 0.050	< 0.050	No

CTR #	Pollutant	C or Governing Criterion or Objective (µg/L)	MEC or Minimum DL [1][2] (µg/L)	B or Minimum DL [1][2] (µg/L)	Result [3]
22	Chlorobenzene	70	< 0.050	< 0.050	No
23	Chlorodibromomethane	0.40	< 0.053	< 0.053	No
24	Chloroethane	No Criteria	< 0.055	< 0.053	U
25	2-Chloroethylvinyl Ether	No Criteria	< 0.20	< 0.20	U
26	Chloroform	No Criteria	< 0.050	< 0.050	U
27	Dichlorobromomethane	0.56	< 0.050	< 0.050	No
28	1,1-Dichloroethane	5.0	< 0.050	< 0.050	No
29	1,2-Dichloroethane	0.38	< 0.059	< 0.059	No
30	1,1-Dichloroethylene	0.057	< 0.050	< 0.050	No
31	1,2-Dichloropropane	0.52	< 0.072	< 0.050	No
32	1,3-Dichloropropylene	0.50	Unavailable	< 0.24	U
33	Ethylbenzene	300	< 0.50	< 0.050	No
34	Methyl Bromide	48	< 0.12	< 0.066	No
35	Methyl Chloride	No Criteria	< 0.050	< 0.050	U
36	Methylene Chloride	4.7	< 0.11	< 0.080	No
37	1,1,2,2-Tetrachloroethane	0.17	< 0.076	< 0.076	No
38	Tetrachloroethylene	0.80	< 0.053	< 0.053	No
39	Toluene	150	< 0.050	< 0.050	No
40	1,2-Trans-Dichloroethylene	10	< 0.060	< 0.050	No
41	1,1,1-Trichloroethane	200	< 0.055	< 0.055	No
42	1,1,2-Trichloroethane	0.60	< 0.085	< 0.077	No
43	Trichloroethylene	2.7	< 0.063	< 0.063	No
44	Vinyl Chloride	0.50	< 0.068	< 0.068	No
45	Chlorophenol	120	< 0.65	< 0.37	No
46	2,4-Dichlorophenol	93	< 0.60	< 0.26	No
47	2,4-Dimethylphenol	540	< 0.52	< 0.30	No
48	2-Methyl-4,6-Dinitrophenol	13	< 2.2	< 0.34	No
49	2,4-Dinitrophenol	70	< 2.4	< 0.20	No
50	2-Nitrophenol	No Criteria	< 0.42	< 0.28	U
51	4-Nitrophenol	No Criteria	< 1.7	< 0.66	U
52	3-Methyl-4-Chlorophenol	No Criteria	1.6	< 0.42	U
53	Pentachlorophenol	0.28	< 0.45	< 0.43	U
54	Phenol	21,000	< 0.37	< 0.20	No
55	2,4,6-Trichlorophenol	2.1	< 0.43	< 0.34	No
56	Acenaphthene	1,200	< 0.48	< 0.22	No
57	Acenaphthylene	No Criteria	< 0.64	< 0.20	U
58	Anthracene	9,600	< 0.79	< 0.20	No
59	Benzidine	0.00012	< 5.3	< 2.7	U
60	Benzo(a)Anthracene	0.0044	< 0.52	< 0.30	U
61	Benzo(a)Pyrene	0.0044	< 0.73	< 0.20	U
62	Benzo(b)Fluoranthene	0.0044	< 0.66	< 0.41	U
63	Benzo(ghi)Perylene	No Criteria	< 0.94	< 0.48	U
64	Benzo(k)Fluoranthene	0.0044	< 0.80	< 0.31	U
65	Bis(2-Chloroethoxy)Methane	No Criteria	< 0.58	< 0.27	U
66	Bis(2-Chloroethyl)Ether	0.031	< 0.52	< 0.68	U
67	Bis(2-Chloroisopropyl)Ether	1,400	< 0.73	< 0.30	No
68	Bis(2-Ethylhexyl)Phthalate	1.8	< 1.1	< 0.20	No
69	4-Bromophenyl Phenyl Ether	No Criteria	< 0.69	< 0.20	U
70	Butylbenzyl Phthalate	3,000	< 0.59	< 0.26	No
71	2-Chloronaphthalene	1,700	< 0.50	< 0.23	No
72	4-Chlorophenyl Phenyl Ether	No Criteria	< 0.68	< 0.20	U
73	Chrysene	0.0044	< 0.73	< 0.26	U
74	Dibenzo(a,h)Anthracene	0.0044	< 0.92	< 0.26	U

CTR #	Pollutant	C or Governing Criterion or Objective (µg/L)	MEC or Minimum DL [1][2] (µg/L)	B or Minimum DL [1][2] (µg/L)	Result [3]
75	1,2-Dichlorobenzene	600	< 0.050	< 0.050	No
76	1,3-Dichlorobenzene	400	< 0.050	< 0.050	No
77	1,4-Dichlorobenzene	5.0	< 0.050	< 0.050	No
78	3,3-Dichlorobenzidine	0.040	< 0.88	< 0.41	U
79	Diethyl Phthalate	23,000	< 0.85	< 0.20	No
80	Dimethyl Phthalate	313,000	< 0.55	< 0.25	No
81	Di-n-Butyl Phthalate	2,700	< 0.74	< 0.20	No
82	2,4-Dinitrotoluene	0.11	< 0.99	< 0.26	U
83	2,6-Dinitrotoluene	No Criteria	< 0.74	< 0.41	U
84	Di-n-Octyl Phthalate	No Criteria	< 0.85	< 0.31	U
85	1,2-Diphenylhydrazine	0.040	< 0.70	< 0.34	U
86	Fluoranthene	300	< 0.70	< 0.20	No
87	Fluorene	1,300	< 0.73	< 0.20	No
88	Hexachlorobenzene	0.00075	< 0.71	< 0.20	U
89	Hexachlorobutadiene	0.44	< 0.59	< 0.24	U
90	Hexachlorocyclopentadiene	50	< 0.26	< 0.30	No
91	Hexachloroethane	1.9	< 0.52	< 0.32	No
92	Indeno(1,2,3-cd) Pyrene	0.0044	< 0.92	< 0.26	No
93	Isophorone	8.4	< 0.51	< 0.31	No
94	Naphthalene	No Criteria	< 0.62	< 0.20	U
95	Nitrobenzene	17	< 0.55	< 0.26	No
96	N-Nitrosodimethylamine	0.00069	< 0.45	< 0.56	U
97	N-Nitrosodi-n-Propylamine	0.0050	< 0.80	< 0.56	U
98	N-Nitrosodiphenylamine	5.0	< 0.80	< 0.27	No
99	Phenanthrene	No Criteria	< 0.60	< 0.20	U
100	Pyrene	960	< 0.62	< 0.26	No
101	1,2,4-Trichlorobenzene	5.0	< 0.67	< 0.24	No
102	Aldrin	0.00013	< 0.00025	< 0.0019	No
103	alpha-BHC	0.0039	< 0.00022	< 0.0018	No
104	beta-BHC	0.014	< 0.00041	< 0.0019	No
105	gamma-BHC	0.019	< 0.00019	< 0.0011	No
106	delta-BHC	No Criteria	< 0.00027	< 0.0012	U
107	Chlordane	0.00057	< 0.076	< 0.048	No
108	4,4-DDT	0.00059	< 0.00016	< 0.0011	No
109	4,4-DDE	0.00059	< 0.0018	< 0.0014	No
110	4,4-DDD	0.00083	< 0.00033	< 0.0018	No
111	Dieldrin	0.00014	< 0.0012	< 0.00078	No
112	alpha-Endosulfan	0.056	< 0.00031	< 0.00086	No
113	beta-Endosulfan	0.056	< 0.00027	< 0.0018	No
114	Endosulfan Sulfate	110	< 0.00051	< 0.0012	No
115	Endrin	0.036	< 0.00017	< 0.0025	No
116	Endrin Aldehyde	0.76	< 0.00051	< 0.0017	No
117	Heptachlor	0.00021	< 0.00023	< 0.00050	No
118	Heptachlor Epoxide	0.00010	< 0.00020	< 0.00080	No
119-125	PCBs sum	0.00017	Unavailable	Unavailable	U
126	Toxaphene	0.00020	< 0.084	< 0.20	No
	Total Ammonia (mg/L N)	1.2	0.13	Unavailable	No
	Total Dissolved Solids (mg/L)	1,000	810	289	No
	Turbidity (NTU)	5.0	5.0	3.6	No
	Chloride (mg/L)	500	Unavailable	12	U
	Phenols	1.0	< 0.037	< 0.20	No
	Trihalomethanes (Total)	80	< 0.050	< 0.050	No

Footnotes:

[1] The maximum effluent concentration and ambient background concentration are the actual detected concentrations unless preceded by a "<" sign, in which case the value shown is the minimum detection level (DL).

[2] The maximum effluent concentration or ambient background concentration is "Unavailable" when there are no monitoring data for the constituent.

[3] RPA Results = Yes, if MEC ≥ WQC, B > WQC and MEC is detected, or Trigger 3
= No, if MEC and B are < WQC or all effluent data are undetected
= Undetermined (U), if no criteria have been promulgated or data are insufficient.

[4] The Mercury Provisions supersede Basin Plan Table 3-4 (see Fact Sheet § III.C.9). In accordance with the Mercury Provisions, the water quality objective (C), MEC, and B are annual averages calculated as described in Fact Sheet section IV.C.3.a.

e. **Acute Toxicity.** Basin Plan section 4.5.5.3.1 requires acute toxicity monitoring and limitations, implying there is reasonable potential for the discharge to cause or contribute to exceedances of the acute toxicity water quality objective.

f. **Chronic Toxicity.** From October 2017 through April 2018, the Discharger obtained four chronic toxicity results from Monitoring Location EFF-001 that were representative of the discharge. (Results obtained during January, March, and April 2018 are omitted as unrepresentative because the FTP's peroxide injection system was not operating correctly during those months.) None of those results exceed 1.0 TUc. Therefore, none exceeded the translated chronic toxicity water quality objective of 1.0 TUc (see Fact Sheet section IV.C.2.a.iii), and there is no reasonable potential for the discharge to cause or contribute to exceedances of the chronic toxicity water quality objective.

g. **Temperature.** Permanente Creek supports warm and cold water habitat beneficial uses; Basin Plan temperature objectives therefore apply. Temperature data from effluent Monitoring Location EFF-001 and receiving water Monitoring Locations RSW-001, 001A, and 002 through 004 indicate that Facility discharges did not impact receiving water temperature before or after the FTS was installed. The Monitoring and Reporting Program requires monitoring of background, effluent, and downstream receiving water temperatures to support future reasonable potential analysis.

4. Water Quality-Based Effluent Limitation Calculations

For Discharge Point Nos. 001 and 007, numeric WQBELs were developed for the pollutants determined to have reasonable potential to cause or contribute to exceedances of water quality objectives. Except for acute toxicity (discussed below), these WQBELs are based on the procedure specified in SIP section 1.4, as required for priority pollutants and as guidance for the other pollutants.

WQBELs for Discharge Point Nos. 002 and 004 through 006 are narrative based on Basin Plan section 4.8 and 40 C.F.R. part 122.44(k). These WQBELs are set forth in Provision VI.A.3 and Attachment S, as amended. U.S. EPA's *NPDES Permit Writers' Manual* (EPA-833-K-10-001, September 2010, page 9-4) indicates that numeric effluent limits are infeasible "when the types of pollutants vary greatly over time." For many pollutants at Discharge Point Nos. 002 and 004 through 006, numeric WQBELs are infeasible because the pollutants in stormwater vary greatly over time. Storms occur irregularly, unpredictably, uncontrollably, and occasionally in large volumes for short periods, so the resulting types of pollutants mobilized by storm runoff vary greatly.

a. **Dilution Credits.** SIP section 1.4.2 allows dilution credits under certain circumstances. Because neither Discharge Point No. 001 nor 007 is submerged, has a diffuser, or achieves any dilution, no dilution credit is used in the calculation of WQBELs.

b. **Calculations.** The following table shows the WQBEL calculations:

Table F-8. WQBEL Calculations

PRIORITY POLLUTANTS	**Antimony**	**Chromium (VI)**	**Selenium**
Units	**µg/L**	**µg/L**	**µg/L**
Basis and Criteria type	Title 22 Primary MCL	BP & CTR FW Aquatic Life	CTR Chronic
Criteria -Acute	—	16	20
Criteria -Chronic	—	11	5.0
Water Effects Ratio (WER)	1	1	1
Lowest WQO	6.0	11	5.0
Dilution Factor (D) (if applicable)	0	0	0
No. of samples per month	4	4	4
Aquatic life criteria analysis required? (Y/N)	N	Y	Y
HH criteria analysis required? (Y/N)	Y	N	N
Applicable Acute WQO		16	20
Applicable Chronic WQO		11	5.0
HH criteria	6.0	—	—
Background (Maximum Conc for Aquatic Life calc)	0.11	0.66	0.68
Background (Average Conc for Human Health calc)	0.11	—	—
Is the pollutant on the 303d list and/or bioaccumulative (Y/N)?	N	N	Y
ECA acute	—	16	20
ECA chronic	—	11	5.0
ECA HH	6.0	—	—
Number of data points <10 or at least 80% of data reported non detect? (Y/N)	Y	N	N
Avg of effluent data points	4.6	0.71	1.1
Std Dev of effluent data points	3.2	0.87	1.0
CV calculated	N/A	1.2	0.89
CV (Selected) – Final	0.60	1.2	0.89
ECA acute mult99	—	0.17	0.23
ECA chronic mult99	—	0.32	0.41
LTA acute	—	2.8	4.5

PRIORITY POLLUTANTS	Antimony	Chromium (VI)	Selenium
Units	**µg/L**	**µg/L**	**µg/L**
LTA chronic	—	3.5	2.0
minimum of LTAs	—	2.8	2.0
AMEL mult95	1.6	2.2	1.8
MDEL mult99	3.1	5.8	4.4
AMEL (aq life)	—	6.0	3.7
MDEL (aq life)	—	16	9.0
MDEL/AMEL Multiplier	2.0	2.7	2.4
AMEL (human hlth)	6.0	—	—
MDEL (human hlth)	12	—	—
minimum of AMEL for Aq. life vs HH	6.0	6.0	3.7
minimum of MDEL for Aq. Life vs HH	12	16	9.0
Previous order limit (30-day average)	—	8.0	4.1
Previous order limit (daily)	—	16	8.2
Final limit – AMEL	6.0	6.0	3.7
Final limit – MDEL	12	16	8.2

5. Acute Toxicity

This Order includes acute toxicity effluent limitations based on Basin Plan Table 4-3. Based on Basin Plan section 3.3.20, if the Discharger can demonstrate that ammonia causes acute toxicity exceeding the acute toxicity limitations in this Order, and that the ammonia in the discharge complies with the ammonia effluent limitations in this Order, then such toxicity does not constitute a violation of the effluent limitations for whole effluent acute toxicity.

D. Discharger Requirement Considerations

1. **Anti-backsliding.** This Order complies with the anti-backsliding provisions of CWA sections 402(o) and 303(d)(4) and 40 C.F.R. section 122.44(l), which generally require effluent limitations in a reissued permit to be as stringent as those in the previous order. The requirements of this Order are at least as stringent as those in the previous order, except for WQBELs for nickel, mercury, thallium, TDS, and turbidity at Discharge Point No. 001, and technology-based requirements for turbidity at Discharge Point Nos. 002, 004, and 005.

   a. This Order does not retain the previous order's nickel, mercury, thallium, TDS, or turbidity WQBELs at Discharge Point No. 001 because effluent data for those pollutants no longer indicate reasonable potential to exceed of water quality objectives. Not retaining those limits is consistent with State Water Board Order No. WQ 2001-16.

   b. This Order does not retain the previous order's technology-based effluent limit for turbidity at Discharge Point Nos. 002, 004, and 005 because that limit was based on

inapplicable guidance. The Discharger enrolled the Facility under the *General Waste Discharge Requirements for Discharges of Process Wastewaters from Aggregate Mining, Sand Washing, and Sand Offloading Facilities to Surface Waters* (NPDES General Permit No. CAG982001) (Sand and Gravel Permit), which imposed a turbidity limit based on aggregate mining facilities within San Francisco Bay Region. The previous order imposed the same turbidity limit based on the Sand and Gravel Permit. However, the discharges should have been subject to the Effluent Limitations Guidelines for cement manufacturing, as discussed in Fact Sheet section IV.B.1. Backsliding is therefore permissible under CWA section 402(o)(2)(B)(ii) and 40 C.F.R. section 122.44(l).

2. **Antidegradation.** This Order complies with the antidegradation provisions of 40 C.F.R. section 131.12 and State Water Board Resolution No. 68-16. It does not authorize lowering water quality as compared to the level of discharge authorized in the previous order, which is the baseline by which to measure whether degradation will occur. This Order does not allow for a reduced level of treatment or increased volume of discharge, nor does it increase effluent limitations relative to the previous order.

3. **Stringency of Requirements for Individual Pollutants.** This Order contains both technology-based effluent limits and WQBELs for individual pollutants. The technology-based requirements implement minimum, applicable federal technology-based requirements. In addition, this Order contains more stringent effluent limitations as necessary to meet water quality standards, including selenium effluent limitations intended to achieve water quality standards for selenium in Permanente Creek, as discussed in Fact Sheet section III.D. Collectively, this Order's restrictions on individual pollutants are no more stringent than required to implement CWA requirements.

   This Order's WQBELs have been derived to implement water quality objectives that protect beneficial uses. The beneficial uses and water quality objectives have been approved pursuant to federal law and are the applicable federal water quality standards. To the extent that WQBELs were derived from the CTR, the CTR is the applicable standard pursuant to 40 C.F.R. section 131.38. The procedures for calculating these WQBELs are based on the CTR, as implemented in accordance with the SIP, which U.S. EPA approved on May 18, 2000. U.S. EPA approved most Basin Plan beneficial uses and water quality objectives prior to May 30, 2000. Beneficial uses and water quality objectives submitted to U.S. EPA prior to May 30, 2000, but not approved by U.S. EPA before that date, are nonetheless "applicable water quality standards for purposes of the CWA" pursuant to 40 C.F.R. section 131.21(c)(1). U.S. EPA approved the remaining beneficial uses and water quality objectives, so they are applicable water quality standards pursuant to 40 C.F.R. section 131.21(c)(2).

V. RATIONALE FOR RECEIVING WATER LIMITATIONS

The receiving water limitations in sections V.A.1 and V.A.2 of this Order are based on Basin Plan narrative and numeric water quality objectives. The receiving water limitation in section V.A.3 of this Order requires compliance with water quality standards.

VI. RATIONALE FOR PROVISIONS

A. Standard Provisions

Attachment D contains standard provisions that apply to all NPDES permits in accordance with 40 C.F.R. section 122.41 and additional conditions applicable to specific categories of permits in accordance with 40 C.F.R. section 122.42. The Discharger must comply with these provisions. The conditions set forth in 40 C.F.R. sections 122.41(a)(1) and (b) through (n) apply to all state-issued NPDES permits and must be incorporated into the permits either expressly or by reference.

Attachment G contains regional standard provisions that supplement the federal standard provisions in Attachment D. In accordance with 40 C.F.R. section 123.25(a)(12), states may omit or modify the federal standard conditions to impose more stringent requirements. This Order omits federal conditions that address enforcement authority specified in 40 C.F.R. sections 122.41(j)(5) and (k)(2) because the State's enforcement authority under the Water Code is more stringent. In lieu of these conditions, this Order incorporates Water Code section 13387(e) by reference.

Attachment S contains stormwater provisions consistent with the State Water Board's *General Permit for Stormwater Discharges Associated with Industrial Activities* (NPDES No. CAS000001) (Industrial General Permit), including requirements for the Discharger to prepare a Stormwater Pollution Prevention Plan, to evaluate BMP performance using stormwater action levels (stormwater action levels are not effluent limitations), and to submit an annual stormwater report. This Order modifies Attachment S to include stormwater action levels appropriate for this Facility. For each toxic pollutant with an effluent limit at Discharge Point Nos. 001 and 007 but no stormwater action level in the Industrial General Permit or U.S.EPA's 2015 *Multi-Sector General Permit for Stormwater Discharges Associated with Industrial Activity (MSGP)*, this Order establishes the lowest acute water quality objective as the stormwater action level. It does not retain the stormwater action level for conductivity of 200 micromhos per centimeter (µmhos/cm) from the previous order because, based on monitoring data collected at Monitoring Location RSW-001A, background conductivity exceeds the stormwater action level. Electrical conductivity at Monitoring Location RSW-001A ranged from 279 to 630 µmhos/cm with an average value of 492 µmhos/cm.

B. Monitoring and Reporting

Pursuant to 40 C.F.R. section 122.48, NPDES permits must specify requirements for recording and reporting monitoring results. Water Code sections 13267 and 13383, and 40 C.F.R. sections 122.41(h) and (j), authorize the Regional Water Board to require technical and monitoring reports. This Order establishes monitoring and reporting requirements, contained in the Monitoring and Reporting Program (Attachment E), that implement federal and State requirements. For more background regarding these requirements, see Fact Sheet section VII.

C. Special Provisions

1. Reopener Provisions

These provisions are based on 40 C.F.R. sections 122.62 and 122.63 and allow modification of this Order and its effluent limitations as necessary in response to updated water quality objectives, regulations, or other new and relevant information that may become available in the future, and other circumstances as allowed by law.

2. Effluent Characterization Study and Report

This Order does not include effluent limitations for priority pollutants that do not demonstrate reasonable potential, but this provision requires the Discharger to evaluate monitoring data to verify that the reasonable potential analysis conclusions of this Order remain valid. This requirement is authorized pursuant to 40 C.F.R. section 122.41(h) and Water Code section 13267, and is necessary to inform the next permit reissuance and to ensure that the Discharger takes timely steps in response to any unanticipated change in effluent quality during the term of this Order.

3. Pollutant Minimization Program

This provision is based on SIP section 2.4.5.

4. Receiving Water Data Reporting

This Order requires the Discharger to upload receiving water data to the California Environmental Data Exchange Network (CEDEN) to the extent that CEDEN accommodates the data type. This requirement ensures that the public can access these data through CEDEN's database, and that the State and Regional Water Boards can use these data to evaluate whether Permanente Creek meets water quality standards pursuant to CWA section 303(d).

5. Dry Season Discharge Requirements

This provision is necessary to maintain existing aquatic habitat beneficial uses between Discharge Point Nos. 001 and 007. Aquatic habitat beneficial uses within this reach include cold freshwater habitat (e.g., trout) and preservation of rare, threatened, or endangered species (e.g., California red-legged frogs).

6. Selenium in Fish Tissue Reasonable Potential Study

This provision may be necessary to conduct future reasonable potential analyses for the Discharger's selenium discharges to Permanente Creek because U.S. EPA has proposed new water quality standards for California for selenium in freshwater (*Water Quality Standards; Establishment of a Numeric Criterion for Selenium for the State of California*, Fed. Reg. Vol. 83, No. 239, December 13, 2018, pages 64059-64078). If U.S. EPA or the State of California promulgates these draft standards (or similar standards), subsequent reasonable potential analyses would need to be based on the new standards. As drafted, the proposed standards would establish tiered water quality criteria. Proposed fish tissue criteria would supersede water column criteria and could serve as the basis for a reasonable potential

analysis. The required study would be conducted in phases. The requirements recognize and reflect the potentially limited availability of fish to sample and analyze.

VII. MONITORING AND REPORTING PROGRAM (MRP)

Attachment E contains the MRP for this Order. It specifies sampling stations, pollutants to be monitored (including all parameters for which effluent limitations are specified), monitoring frequencies, and reporting requirements. The following provides the rationale for the MRP requirements.

A. MRP Requirements Rationale

The MRP's monitoring and reporting requirements are based on California Water Code section 13267 and are necessary to inform the next permit reissuance; to collect data needed to evaluate progress toward resolving the selenium impairment of Permanente Creek, as discussed in Fact Sheet section III.D; and to ensure that any potential toxicity in Permanente Creek other than pesticides is identified and resolved, as discussed in Fact Sheet section III.D. The reports required by the MRP are necessary to accomplish the foregoing and to ensure compliance with this Order. The Discharger is subject to these requirements because it owns and operates the Facility, which discharges wastes subject to this Order. The burden, including costs, of the monitoring and reporting, bears a reasonable relationship to the need to achieve water quality standards for selenium and aquatic toxicity in Permanente Creek, and to ensure permit compliance.

1. **Effluent Monitoring.** Effluent flow monitoring is necessary at Monitoring Locations EFF-001 and EFF-007 to evaluate compliance with Prohibition III.B and to understand Facility operations. Effluent flow monitoring is necessary at Monitoring Locations EFF-002, EFF-004, EFF-005, and EFF-006 to evaluate the Discharger's management of Facility stormwater. Monitoring for the other parameters is necessary at Monitoring Locations EFF-001, EFF-002, EFF-004, EFF-005, EFF-006, and EFF-007 to evaluate compliance with this Order's effluent limitations and to conduct future reasonable potential analyses. Monitoring is also needed at Monitoring Locations EFF-002, EFF 004, EFF-005, and EFF 006 to evaluate the effectiveness of the Discharger's stormwater BMPs by comparing discharge concentrations with stormwater action levels.

2. **Receiving Water Monitoring.** Receiving water monitoring is necessary to characterize the receiving water (e.g., to provide background values for future reasonable potential analyses) and the effects of the discharges on the receiving water (i.e., to determine compliance with receiving water limitations). Monitoring Location RSW-001A represents background water quality based on the *Background Monitoring Report* (Golder Associates, March 22, 2013), which found that Monitoring Location RSW-001A is unaffected by Facility operations, is accessible for sampling, and has similar geologic conditions as the discharge locations. Monitoring Locations RSW-001, RSW-002, and RSW-004 represent conditions immediately downstream of the discharge points. Monitoring Locations RSW-005, RSW-006, and RSW-007 represent conditions farther downstream of the Facility.

   By including Monitoring Locations RSW-005, RSW-006, and RSW-007 within this Order's MRP, the Order updates receiving water monitoring requirements the Executive Officer imposed through an August 1, 2018, order to provide technical information pursuant to

Water Code section 13267. In doing so, this Order contains monitoring and reporting requirements to allow the Regional Water Board to evaluate progress toward resolving the selenium impairment of Permanente Creek.

3. **Toxicity Testing**. Acute toxicity tests are necessary to evaluate compliance with acute toxicity effluent limitations. Chronic toxicity tests are necessary for future reasonable potential analysis and to evaluate whether chronic toxicity triggers the need for a Toxicity Reduction Evaluation. By including chloride, total hardness as $CaCO_3$, sulfate, chronic toxicity, and trace metals monitoring at Monitoring Locations RSW-004 and RSW-005 within this Order's MRP, the Order updates receiving water monitoring requirements the Executive Officer imposed through an August 1, 2018, order to provide technical information pursuant to Water Code section 13267. In doing so, this Order contains monitoring and reporting requirements to allow the Regional Water Board to evaluate progress toward resolving the toxicity impairment of Permanente Creek.

4. **Other Monitoring Requirements.** Pursuant to CWA section 308, U.S. EPA requires major and selected minor dischargers to participate in a Discharge Monitoring Report-Quality Assurance (DMR-QA) Study Program. The program annually evaluates the analytical abilities of laboratories that perform or support NPDES permit-required monitoring. The program applies to discharger laboratories and contract laboratories. There are two options to comply: (1) dischargers can obtain and analyze DMR-QA samples, or (2) pursuant to a waiver U.S. EPA issued to the State Water Board, dischargers can submit results from the most recent Water Pollution Performance Evaluation Study. Dischargers must submit results annually to the State Water Board, which then forwards the results to U.S. EPA.

B. Monitoring Requirements Summary

The table below summarizes routine monitoring requirements. This table is for informational purposes only. The actual requirements are specified in the MRP and elsewhere in this Order.

Table F-9. Monitoring Requirements Summary

Parameter	Effluent EFF-001 and EFF-007	Effluent EFF-002 and EFF-004 through EFF-006	Receiving Water RSW-001 and RSW-001A	Receiving Water RSW-002	Receiving Water RSW-004	Receiving Water RSW-005 through RSW-007
Chloride	—	—	1/Year [1]	—	1/Quarter	1/Quarter [2]
Conductivity	—	1/Quarter	[3]	—	—	—
Dissolved Oxygen	—	—	[3]	1/Quarter	[3]	[3]
Flow	Continuous/D [4]	1/Month [4]	[3]	1/Quarter	[3]	[3]
Hardness	—	—	1/Year [5]	—	1/Quarter	1/Quarter [2]
Oil and Grease	1Quarter	1/Quarter [6]	—	—	—	—
pH	Continuous/D or 1/Day [7]	1/Quarter	[3]	1/Quarter	[3]	[3]
Settleable Matter	1/Month	1/Quarter	1/Year [5]	—	—	—
Sulfate	—	—	1/Quarter [1]	—	1/Quarter	1/Quarter [2]
Temperature	1/Month	—	[3]	1/Quarter	[3]	[3]
Total Residual Chlorine [7]	1/Day	—	—	—	—	—
TSS	1/Week	1/Quarter	[3]	1/Quarter	[3]	[3]
Turbidity	—	—	1/Year	1/Quarter	1/Quarter	1/Quarter
Acute Toxicity	1/Quarter	—	—	—	—	—
Antimony	1/Month	1/Quarter	1/Year	1/Quarter	1/Quarter	1/Quarter

Parameter	Effluent EFF-001 and EFF-007	Effluent EFF-002 and EFF-004 through EFF-006	Receiving Water RSW-001 and RSW-001A	Receiving Water RSW-002	Receiving Water RSW-004	Receiving Water RSW-005 through RSW-007
Chromium (VI)	1/Month	1/Quarter	1/Year	1/Quarter	1/Quarter	1/Quarter
Chronic Toxicity	1/Quarter	—	1/Quarter [1]	—	1/Quarter	1/Quarter [2]
Mercury	1/Quarter	1/Year	1/Year	1/Year	—	1/Year [8]
Nickel	1/Month	1/Quarter	1/Year	1/Quarter	1/Quarter	1/Quarter
Selenium [9, 10]	1/Week	[3]	[3]	1/Quarter	[3]	[3]
TDS	1/Quarter	—	1/Year	1/Year	1/Year	2/Year
Trace Metals [11]	—	—	1/Quarter [1]	—	1/Quarter [2]	1/Quarter [2]
Other priority pollutants [12]	1/Year	—	1/Year	—	—	—
Standard Observations [13]	1/Day	—	[3]	1/Quarter	1/Quarter	[3]
Visual Observations [14]	—	Each Occurrence	—	—	—	—

Unit Abbreviations:

µg/L = micrograms per liter
µmhos/cm = micromhos per centimeter
mg/L = milligrams per liter
mL/L-hr = milliliters per liter-hour
MG = million gallons
NTU = nephelometric turbidity units

Sampling Frequencies:

Each Occurrence = each significant stormwater discharge, defined as a continuous discharge of stormwater for a minimum of one hour, or an intermittent discharge of stormwater for a minimum of three hours, in a 12-hour period. Visual observations are only required in daylight during scheduled facility operating hours.
Continuous/Day = measured continuously, recorded and reported at least daily
1/Day = once per day
1/Week = once per week
1/Month = once per month
2/Month = twice per month
1/Quarter = once per quarter
1/Year = once per year

Footnotes:

[1] To be monitored at Monitoring Location RSW-001. Monitoring is not required at RSW-001A.

[2] Chloride, total hardness as $CaCO_3$, sulfate, chronic toxicity, and trace metals are to be monitored at Monitoring Locations RSW-004 and RSW-005 only.

[3] The monitoring frequency is to be monthly during the wet season (November 1 through April 30) and twice during the dry season (May 1 through October 31).

[4] The following flow information is to be reported:
- Daily average flow (gpd)
- Total monthly flow volume (MG)

[5] Hardness and settleable matter shall be monitored at Monitoring Location RSW-001A. Hardness and settleable matter monitoring is not required at Monitoring Location RSW-001

[6] At Monitoring Location EFF-006, total organic carbon may be substituted for oil and grease.

[7] pH and total residual chlorine are to be monitored once per day, Monday through Friday, at Monitoring Locations EFF-001 and EFF-007. If pH is monitored continuously, the minimum and maximum pH values for each day are to be reported in self-monitoring reports.

[8] Mercury shall be monitored at Monitoring Location RSW-005. Mercury monitoring is not required at Monitoring Locations RSW-006 and RSW-007.

[9] The Discharger may reduce the monitoring frequency from 1/Week to 2/Month at one or both locations where full compliance with the selenium effluent limitations has been demonstrated for at least the most recent two years. Before the Discharger may reduce the monitoring frequency, it shall obtain written confirmation from the Executive Officer.

[10] Selenium samples are to be collected at Monitoring Locations EFF-002, EFF-004, EFF-005, and EFF-006 during the first significant stormwater discharge of the wet season (November 1 through April 30) that occurs in daylight during scheduled Facility operating hours.

[11] Trace metals are total recoverable, arsenic, cadmium, total chromium, copper, molybdenum, thallium, vanadium, and zinc. They are to be monitored concurrently with chronic toxicity.

[12] The Discharger is to monitor for the pollutants listed in Attachment G, Table B

[13] Standard observations are listed in Attachment G section III.B.2.

[14] Visual observations are to be as required by Attachment S section II.A.

VIII. PUBLIC PARTICIPATION

The Regional Water Board considered the issuance of this Order that will serve as an NPDES permit for the Facility. As a step in the Order adoption process, Regional Water Board staff developed a tentative Order and encouraged public participation in the Order adoption process.

A. Notification of Interested Parties. The Regional Water Board notified the Discharger and interested agencies and persons of its intent to prescribe WDRs for the discharge and provided an opportunity to submit written comments and recommendations. Notification was provided through the *Cupertino Courier*. The public had access to the agenda and any changes in dates and locations through the Regional Water Board's website at http://www.waterboards.ca.gov/sanfranciscobay.

B. Written Comments. Interested persons were invited to submit written comments concerning the tentative WDRs as explained through the notification process. Comments were due either in person or by mail at the Regional Water Board office at 1515 Clay Street, Suite 1400, Oakland, California 94612, to the attention of John H Madigan, P.E. For full staff response and Regional Water Board consideration, the written comments were due at the Regional Water Board office by **5:00 p.m. on May 3, 2019.**

C. Public Hearing. The Regional Water Board held a public hearing on the tentative WDRs during its regular meeting at the following date and time, and at the following location:

Date:	July 10, 2019
Time:	9:00 a.m.
Location:	Elihu Harris State Office Building 1515 Clay Street, 1st Floor Auditorium Oakland, CA 94612
Contact:	John H. Madigan, (510) 622-2405, John.Madigan@waterboards.ca.gov

Interested persons were invited to attend. At the public hearing, the Regional Water Board heard testimony pertinent to the discharge, WDRs, and permit. For accuracy of the record, important testimony was requested to be in writing.

Dates and venues change. The Regional Water Board web address is http://www.waterboards.ca.gov/sanfranciscobay, where one could access the current agenda for changes in dates and locations.

D. Reconsideration of Waste Discharge Requirements. Any aggrieved person may petition the State Water Board to review the Regional Water Board's decision regarding the final WDRs. The State Water Board must receive the petition at the following address within 30 calendar days of the Regional Water Board action:

State Water Resources Control Board
Office of Chief Counsel
P.O. Box 100, 1001 I Street
Sacramento, CA 95812-0100

For instructions on how to file a petition for review, see http://www.waterboards.ca.gov/public_notices/petitions/water_quality/wqpetition_instr.shtml.

E. Information and Copying. The Report of Waste Discharge, related supporting documents, and comments received are on file and may be inspected at the address above at any time between 9:00 a.m. and 5:00 p.m., Monday through Friday. Copying of documents may be arranged by calling (510) 622-2300.

F. Register of Interested Persons. Any person interested in being placed on the mailing list for information regarding the WDRs and NPDES permit should contact the Regional Water Board, reference the Facility, and provide a name, address, and phone number.

G. Additional Information. Requests for additional information or questions regarding this Order should be directed to John H. Madigan, (510) 622-2405, John.Madigan@waterboards.ca.gov.

ATTACHMENT G

REGIONAL STANDARD PROVISIONS
AND MONITORING AND REPORTING REQUIREMENTS
(SUPPLEMENT TO ATTACHMENT D)

November 2017

Contents

I. STANDARD PROVISIONS – PERMIT COMPLIANCE G-1
A. Duty to Comply G-1
B. Need to Halt or Reduce Activity Not a Defense G-1
C. Duty to Mitigate G-1
1. Contingency Plan G-1
2. Spill Prevention Plan G-2
D. Proper Operation and Maintenance G-2
1. Operation and Maintenance Manual G-2
2. Wastewater Facilities Status Report G-2
3. Proper Supervision and Operation of Publicly-Owned Treatment Works (POTWs) G-2
E. Property Rights G-2
F. Inspection and Entry G-2
G. Bypass G-2
H. Upset G-2
I. Other G-3
II. STANDARD PROVISIONS – PERMIT ACTION G-3
III. STANDARD PROVISIONS – MONITORING G-3
A. Sampling and Analyses G-3
1. Certified Laboratories G-3
2. Minimum Levels G-3
3. Monitoring Frequency G-3
B. Standard Observations G-5
1. Receiving Water Observations G-5
2. Wastewater Effluent Observations G-6
3. Beach and Shoreline Observations G-6
4. Waste Treatment and/or Disposal Facility Periphery Observations G-6
IV. STANDARD PROVISIONS – RECORDS G-6
A. Records to be Maintained G-6
B. Records of Monitoring G-6
1. Analytical Information G-6
2. Disinfection Process G-7
3. Wastewater Treatment Process Solids G-7
4. Treatment Process Bypasses G-7
5. Treatment Facility Overflows G-7
C. Claims of Confidentiality G-7
V. STANDARD PROVISIONS – REPORTING G-8
A. Duty to Provide Information G-8
B. Signatory and Certification Requirements G-8
C. Monitoring Reports G-8
1. Self-Monitoring Reports G-8
D. Compliance Schedules G-11
E. Twenty-Four Hour Reporting G-11
1. Oil or Other Hazardous Material Spills G-11
2. Unauthorized Municipal Wastewater Treatment Plant Discharges G-12
F. Planned Changes G-13
G. Anticipated Noncompliance G-13
H. Other Noncompliance G-13
I. Other Information G-13
VI. STANDARD PROVISION – ENFORCEMENT G-13

VII. ADDITIONAL PROVISIONS – NOTIFICATION LEVELS G-13
VIII. DEFINITIONS G-13

REGIONAL STANDARD PROVISIONS, AND MONITORING AND REPORTING REQUIREMENTS

APPLICABILITY

This document supplements the requirements of Federal Standard Provisions (Attachment D). For clarity, these provisions are arranged using to the same headings as those used in Attachment D.

I. STANDARD PROVISIONS - PERMIT COMPLIANCE

A. Duty to Comply – Not Supplemented

B. Need to Halt or Reduce Activity Not a Defense – Not Supplemented

C. Duty to Mitigate – Supplement to Attachment D, Provision I.C.

1. Contingency Plan. The Discharger shall maintain a Contingency Plan as prudent in accordance with current facility emergency planning. The Contingency Plan shall describe procedures to ensure that existing facilities remain in, or are rapidly returned to, operation in the event of a process failure or emergency incident, such as employee strike, strike by suppliers of chemicals or maintenance services, power outage, vandalism, earthquake, or fire. The Discharger may combine the Contingency Plan and Spill Prevention Plan (see Provision I.C.2, below) into one document. In accordance with Regional Water Board Resolution No. 74-10, discharge in violation of the permit where the Discharger has failed to develop and implement a Contingency Plan as described below may be the basis for considering the discharge a willful and negligent violation of the permit pursuant to California Water Code section 13387. The Contingency Plan shall, at a minimum, provide for the following:

a. Sufficient personnel for continued facility operation and maintenance during employee strikes or strikes against contractors providing services;

b. Maintenance of adequate chemicals or other supplies, and spare parts necessary for continued facility operations;

c. Emergency standby power;

d. Protection against vandalism;

e. Expeditious action to repair failures of, or damage to, equipment, including any sewer lines;

f. Reporting of spills and discharges of untreated or inadequately treated wastes, including measures taken to clean up the effects of such discharges; and

g. Maintenance, replacement, and surveillance of physical condition of equipment and facilities, including any sewer lines.

2. Spill Prevention Plan**.** The Discharger shall maintain a Spill Prevention Plan to prevent accidental discharges and to minimize the effects of any such discharges. The Spill Prevention Plan shall do the following:

a. Identify the possible sources of accidental discharge, untreated or partially-treated waste bypass, and polluted drainage;

b. State when current facilities and procedures became operational and evaluate their effectiveness; and

c. Predict the effectiveness of any proposed facilities and procedures and provide an implementation schedule with interim and final dates when the proposed facilities and procedures will be constructed, implemented, or operational.

D. Proper Operation and Maintenance – Supplement to Attachment D, Provision I.D

1. Operation and Maintenance Manual**.** The Discharger shall maintain an Operation and Maintenance Manual to provide the plant and regulatory personnel with a source of information describing all equipment, recommended operational strategies, process control monitoring, and maintenance activities. To remain a useful and relevant document, the Operation and Maintenance Manual shall be kept updated to reflect significant changes in treatment facility equipment and operational practices. The Operation and Maintenance Manual shall be maintained in usable condition and be available for reference and use by all relevant personnel and Regional Water Board staff.

2. Wastewater Facilities Status Report**.** The Discharger shall maintain a Wastewater Facilities Status Report and regularly review, revise, or update it, as necessary. This report shall document how the Discharger operates and maintains its wastewater collection, treatment, and disposal facilities to ensure that all facilities are adequately staffed, supervised, financed, operated, maintained, repaired, and upgraded as necessary to provide adequate and reliable transport, treatment, and disposal of all wastewater from both existing and planned future wastewater sources under the Discharger's service responsibilities.

3. Proper Supervision and Operation of Publicly-Owned Treatment Works (POTWs)**.** POTWs shall be supervised and operated by persons possessing certificates of appropriate grade pursuant to Title 23, section 3680, of the California Code of Regulations.

E. Property Rights – Not Supplemented

F. Inspection and Entry – Not Supplemented

G. Bypass – Not Supplemented

H. Upset – Not Supplemented

I. Other – Addition to Attachment D

1. Neither the treatment nor the discharge of pollutants shall create pollution, contamination, or nuisance as defined by California Water Code section 13050.

2. Collection, treatment, storage, and disposal systems shall be operated in a manner that precludes public contact with wastewater. If public contact with wastewater could reasonably occur on public property, warning signs shall be posted.

3. If the Discharger submits a timely and complete Report of Waste Discharge for permit reissuance, this permit shall continue in force and effect until the permit is reissued or the Regional Water Board rescinds the permit.

II. STANDARD PROVISIONS – PERMIT ACTION – Not Supplemented

III. STANDARD PROVISIONS – MONITORING

A. Sampling and Analyses – **Supplement to Attachment D, Provisions** III.A and III.B

1. Certified Laboratories. Water and waste analyses shall be performed by a laboratory certified for these analyses in accordance with California Water Code section 13176.

2. Minimum Levels. For the 126 priority pollutants, the Discharger should use the analytical methods listed in Table B unless the Monitoring and Reporting Program (MRP, Attachment E) requires a particular method or minimum level (ML). All monitoring instruments and equipment shall be properly calibrated and maintained to ensure accuracy of measurements.

3. Monitoring Frequency. The MRP specifies the minimum sampling and analysis schedule.

a. Sample Collection Timing

i. The Discharger shall collect influent samples on varying days selected at random and shall not include any plant recirculation or other sidestream wastes, unless otherwise stipulated in the MRP. The Executive Officer may approve an alternative influent sampling plan if it is representative of plant influent and complies with all other permit requirements.

ii. The Discharger shall collect effluent samples on days coincident with influent sampling, unless otherwise stipulated by the MRP. If influent sampling is not required, the Discharger shall collect effluent samples on varying days selected at random, unless otherwise stipulated in the MRP. The Executive Officer may approve an alternative effluent sampling plan if it is representative of plant discharge and in compliance with all other permit requirements.

iii. The Discharger shall collect effluent grab samples during periods of daytime maximum peak flows (or peak flows through secondary treatment units for facilities that recycle effluent).

iv. Effluent sampling for conventional pollutants shall occur on at least one day of any multiple-day bioassay the MRP requires. During the course of the bioassay, on at least one day, the Discharger shall collect and retain samples of the discharge. In the event that a bioassay result does not comply with effluent limitations, the Discharger shall analyze the retained samples for pollutants that could be toxic to aquatic life and for which it has effluent limitations.

(a) The Discharger shall perform bioassays on final effluent samples; when chlorine is used for disinfection, bioassays shall be performed on effluent after chlorination and dechlorination; and

(b) The Discharger shall analyze for total ammonia nitrogen and calculate the amount of un-ionized ammonia whenever test results fail to meet effluent limitations.

b. Conditions Triggering Accelerated Monitoring

i. **Average Monthly Effluent Limitation Exceedance.** If the results from two consecutive samples of a constituent monitored in a particular month exceed the average monthly effluent limitation for any parameter (or if the required sampling frequency is once per month or less and the monthly sample exceeds the average monthly effluent limitation), the Discharger shall, within 24 hours after the results are received, increase its sampling frequency to daily until the results from the additional sampling show that the parameter complies with the average monthly effluent limitation.

ii. **Maximum Daily Effluent Limitation Exceedance.** If a sample result exceeds a maximum daily effluent limitation, the Discharger shall, within 24 hours after the result is received, increase its sampling frequency to daily until the results from two samples collected on consecutive days show compliance with the maximum daily effluent limitation.

iii. **Acute Toxicity.** If final or intermediate results of an acute bioassay indicate a violation or threatened violation (e.g., the percentage of surviving test organisms of any single acute bioassay is less than 70 percent), the Discharger shall initiate a new test as soon as practical or as described in applicable State Water Board plan provisions that become effective after adoption of these Regional Standard Provisions. The Discharger shall investigate the cause of the mortalities and report its findings in the next self-monitoring report.

iv. **Chlorine.** The Discharger shall calibrate chlorine residual analyzers against grab samples as frequently as necessary to maintain accurate control and reliable operation. If an effluent violation is detected, the Discharger shall collect grab samples at least every 30 minutes until compliance with the limitation is achieved, unless the Discharger monitors chlorine residual continuously. In such cases, the Discharger shall continue to conduct continuous monitoring.

v. **Bypass.** Except as indicated below, if a Discharger bypasses any portion of its treatment facility, it shall monitor flows and collect samples at affected discharge points and analyze samples for all constituents with effluent limitations on a daily

basis for the duration of the bypass. The Discharger need not accelerate chronic toxicity monitoring. The Discharger also need not collect and analyze samples for mercury, dioxin-TEQ, and PCBs after the first day of the bypass. The Discharger may satisfy the accelerated acute toxicity monitoring requirement by conducting a flow-through test or static renewal test that captures the duration of the bypass (regardless of the method specified in the MRP). If bypassing disinfection units only, the Discharger shall only monitor bacteria indicators daily.

(a) Bypass for Essential Maintenance. If a Discharger bypasses a treatment unit for essential maintenance pursuant to Attachment D section I.G.2, the Executive Officer may reduce the accelerated monitoring requirements above if the Discharger (i) monitors effluent at affected discharge points on the first day of the bypass for all constituents with effluent limitations, except chronic toxicity; and (ii) identifies and implements measures to ensure that the bypass will continue to comply with effluent limitations.

(b) Approved Wet Weather Bypasses. If a Discharger bypasses a treatment unit or permitted outfall during wet weather with Executive Officer approval pursuant to Attachment D section I.G.4, the Discharger shall monitor flows and collect and retain samples for affected discharge points on a daily basis for the duration of the bypass. The Discharger shall analyze daily for TSS using 24-hour composites (or more frequent increments) and for bacteria indicators with effluent limitations using grab samples. If TSS exceeds 45 mg/L in any composite sample, the Discharger shall also analyze daily the retained samples for all other constituents with effluent limitations, except oil and grease, mercury, PCBs, dioxin-TEQ, and acute and chronic toxicity. Additionally, at least once each year, the Discharger shall analyze the retained samples for one approved bypass for all other constituents with effluent limitations, except oil and grease, mercury, PCBs, dioxin-TEQ, and acute and chronic toxicity. This monitoring shall be in addition to the minimum monitoring specified in the MRP.

B. Standard Observations – Addition to Attachment D

1. **Receiving Water Observations.** The following requirements only apply when the MRP requires standard observations of receiving waters. Standard observations shall include the following:

   a. **Floating and Suspended Materials** (e.g., oil, grease, algae, and other macroscopic particulate matter) **—** presence or absence, source, and size of affected area.

   b. **Discoloration and Turbidity —** color, source, and size of affected area.

   c. **Odor —** presence or absence, characterization, source, and distance of travel.

   d. **Beneficial Water Use —** estimated number of water-associated waterfowl or wildlife, fisherpeople, and other recreational activities.

   e. **Hydrographic Condition —** time and height of high and low tides (corrected to nearest National Oceanic and Atmospheric Administration location for the sampling date and time).

f. **Weather Conditions —** wind direction, air temperature, and total precipitation during five days prior to observation.

2. **Wastewater Effluent Observations.** The following requirements only apply when the MRP requires standard observations of wastewater effluent. Standard observations shall include the following:

   a. **Floating and Suspended Material of Wastewater Origin** (e.g., oil, grease, algae, and other macroscopic particulate matter) — presence or absence.

   b. **Odor —** presence or absence, characterization, source, distance of travel, and wind direction.

3. **Beach and Shoreline Observations.** The following requirements only apply when the MRP requires standard observations of beaches or shorelines. Standard observations shall include the following:

   a. **Material of Wastewater Origin —** presence or absence, description of material, estimated size of affected area, and source.

   b. **Beneficial Use —** estimate of number of people participating in recreational water contact, non-water contact, and fishing activities.

4. **Waste Treatment and/or Disposal Facility Periphery Observations.** The following requirements only apply when the MRP requires standard observations of the periphery of waste treatment or disposal facilities. Standard observations shall include the following:

   a. **Odor —** presence or absence, characterization, source, and distance of travel.

   b. **Weather Conditions —** wind direction and estimated velocity.

IV. STANDARD PROVISIONS – RECORDS

A. Records to be Maintained – Supplement to Attachment D, Provision IV.A

The Discharger shall maintain records in a manner and at a location (e.g., the wastewater treatment plant or the Discharger's offices) such that the records are accessible to Regional Water Board staff. The minimum retention period specified in Attachment D, Provision IV, shall be extended during the course of any unresolved litigation regarding permit-related discharges, or when requested by Regional Water Board or U.S. EPA, Region IX, staff.

A copy of the permit shall be maintained at the discharge facility and be available at all times to operating personnel.

B. Records of Monitoring – Supplement to Attachment D, Provision IV.B

Monitoring records shall include the following:

1. **Analytical Information.** Records shall include analytical method detection limits, minimum levels, reporting levels, and related quantification parameters.

2. **Disinfection Process.** For the disinfection process, records shall include the following:
   - **a.** For bacteriological analyses:
     - **i.** Wastewater flow rate at the time of sample collection; and
     - **ii.** Required statistical parameters for cumulative bacterial values (e.g., moving median or geometric mean for the number of samples or sampling period identified in the MRP).
   - **b.** For the chlorination process (when chlorine is used for disinfection), at least daily average values for the following:
     - **i.** Chlorine residual of treated wastewater as it enters the chlorine contact basin (mg/L);
     - **ii.** Chlorine dosage (kg/day); and
     - **iii.** Dechlorination chemical dosage (kg/day).

3. **Wastewater Treatment Process Solids.** For each treatment unit process that involves solids removal from the wastewater stream, records shall include the following:
   - **a.** Total volume or mass of solids removed from each collection unit (e.g., grit, skimmings, undigested biosolids, or combination) for each calendar month or other time period as appropriate, but not to exceed annually; and
   - **b.** Final disposition of such solids (e.g., landfill, other subsequent treatment unit).

4. **Treatment Process Bypasses.** For all treatment process bypasses, including wet weather blending, records shall include the following:
   - **a.** Chronological log of treatment process bypasses;
   - **b.** Identification of treatment processes bypassed;
   - **c.** Beginning and ending dates and times of bypasses;
   - **d.** Bypass durations;
   - **e.** Estimated bypass volumes; and
   - **f.** Description of, or reference to other reports describing, the bypasses, their cause, the corrective actions taken (except for wet weather blending explicitly approved within the permit and in compliance with any related permit conditions), and any additional monitoring conducted.

5. **Treatment Plant Overflows.** The Discharger shall retain a chronological log of overflows at the treatment plant, including the headworks and all units and appurtenances downstream, and records supporting the information provided in accordance with Provision V.E.2, below.

C. Claims of Confidentiality – Not Supplemented

V. STANDARD PROVISIONS – REPORTING

A. Duty to Provide Information – Not Supplemented

B. Signatory and Certification Requirements – Not Supplemented

C. Monitoring Reports – Supplement to Attachment D, Provision V.C

1. **Self-Monitoring Reports.** For each reporting period established in the MRP, the Discharger shall submit a self-monitoring report to the Regional Water Board in accordance with the requirements listed in the MRP and below:

   a. **Transmittal Letter.** Each self-monitoring report shall be submitted with a transmittal letter that includes the following:

      i. Identification of all violations of effluent limitations or other waste discharge requirements found during the reporting period;

      ii. Details regarding the violations, such as parameters, magnitude, test results, frequency, and dates;

      iii. Causes of the violations;

      iv. Corrective actions taken or planned to resolve violations and prevent recurrences, and dates or time schedules for implementation (the Discharger may refer to previously submitted reports that address the corrective actions);

      v. Explanation for any data invalidation. Data should not be submitted in a self-monitoring report if it does not meet quality assurance/quality control standards. However, if the Discharger wishes to invalidate a measurement after submitting it in a self-monitoring report, the Discharger shall identify the measurement suspected to be invalid and state the Discharger's intent to submit, within 60 days, a formal request to invalidate the measurement. The formal request shall include the original measurement in question, the reason for invalidating the measurement, all relevant documentation that supports invalidation (e.g., laboratory sheet, log entry, test results), and a discussion of the corrective actions taken or planned (with a time schedule for completion) to prevent recurrence of the sampling or measurement problem;

      vi. Description of blending, if any. If the Discharger blends, it shall describe the duration of blending events and certify whether the blending complied with all conditions for blending;

      vii. Description of other bypasses, if any. If the Discharger bypasses any treatment units (other than blending), it shall describe the duration of the bypasses and effluent quality during those times; and

      viii. Signature. The transmittal letter shall be signed in accordance with Attachment D, Provision V.B.

b. Compliance Evaluation Summary. Each self-monitoring report shall include a compliance evaluation summary that addresses each parameter for which the permit specifies effluent limitations, the number of samples taken during the monitoring period, and the number of samples that exceed the effluent limitations.

c. More Frequent Monitoring. If the Discharger monitors any pollutant more frequently than required by the MRP, the Discharger shall include the results of such monitoring in the calculation and reporting of the data submitted in the self-monitoring report.

d. Analysis Results

i. Tabulation. Each self-monitoring report shall include tabulations of all required analyses and observations, including parameters, dates, times, sample stations, types of samples, test results, method detection limits, method minimum levels, and method reporting levels (if applicable), signed by the laboratory director or other responsible official.

ii. Multiple Samples. Unless the MRP specifies otherwise, when determining compliance with effluent limitations (other than instantaneous effluent limitations) and more than one sample result is available, the Discharger shall compute the arithmetic mean. If the data set contains one or more results that are "Detected, but Not Quantified (DNQ) or "Not Detected" (ND), the Discharger shall instead compute the median in accordance with the following procedure:

(a) The data set shall be ranked from low to high, reported ND determinations lowest, DNQ determinations next, followed by quantified values (if any). The order of the individual ND or DNQ determinations is unimportant.

(b) The median of the data set shall be determined. If the data set has an odd number of data points, the median is the middle value. If the data set has an even number of data points, the median is the average of the two values around the middle, unless one or both of these values is ND or DNQ, in which case the median shall be the lower of the two results (where DNQ is lower than a quantified value and ND is lower than DNQ).

iii. Duplicate Samples. The Discharger shall report the average of duplicate sample analyses when reporting for a single sample result (or the median if one or more of the duplicates is DNQ or ND [see Provision V.C.1.c.ii, above]). For bacteria indicators, the Discharger shall report the geometric mean of the duplicate analyses.

iv. Dioxin-TEQ. The Discharger shall report for each dioxin and furan congener the analytical results of effluent monitoring, including the reporting level, the method detection limit, and the measured concentration. The Discharger shall report all measured values of individual congeners, including data qualifiers. When calculating dioxin-TEQ, the Discharger shall set congener concentrations below the minimum levels (MLs) to zero. The Discharger shall calculate and report dioxin-TEQ using the following formula, where the MLs, toxicity equivalency factors (TEFs), and bioaccumulation equivalency factors (BEFs) are as provided in Table A:

$$\text{Dioxin-TEQ} = \Sigma\ (C_x \times TEF_x \times BEF_x)$$

where: C_x = measured or estimated concentration of congener *x*
TEF_x = toxicity equivalency factor for congener x
BEFx = bioaccumulation equivalency factor for congener *x*

Table A

Minimum Levels, Toxicity Equivalency Factors,
and Bioaccumulation Equivalency Factors

Dioxin or Furan Congener	Minimum Level (pg/L)	2005 Toxicity Equivalency Factor (TEF)	Bioaccumulation Equivalency Factor (BEF)
2,3,7,8-TCDD	10	1.0	1.0
1,2,3,7,8-PeCDD	50	1.0	0.9
1,2,3,4,7,8-HxCDD	50	0.1	0.3
1,2,3,6,7,8-HxCDD	50	0.1	0.1
1,2,3,7,8,9-HxCDD	50	0.1	0.1
1,2,3,4,6,7,8-HpCDD	50	0.01	0.05
OCDD	100	0.0003	0.01
2,3,7,8-TCDF	10	0.1	0.8
1,2,3,7,8-PeCDF	50	0.03	0.2
2,3,4,7,8-PeCDF	50	0.3	1.6
1,2,3,4,7,8-HxCDF	50	0.1	0.08
1,2,3,6,7,8-HxCDF	50	0.1	0.2
1,2,3,7,8,9-HxCDF	50	0.1	0.6
2,3,4,6,7,8-HxCDF	50	0.1	0.7
1,2,3,4,6,7,8-HpCDF	50	0.01	0.01
1,2,3,4,7,8,9-HpCDF	50	0.01	0.4
OCDF	100	0.0003	0.02

e. Results Not Yet Available. The Discharger shall make all reasonable efforts to obtain analytical data for required parameter sampling in a timely manner. Certain analyses may require additional time to complete analytical processes and report results. In these cases, the Discharger shall describe the circumstances in the self-monitoring report and include the data for these parameters and relevant discussions of any violations in the next self-monitoring report due after the results are available.

f. Annual Self-Monitoring Reports. By the date specified in the MRP, the Discharger shall submit an annual self-monitoring report covering the previous calendar year. The report shall contain the following:

i. Comprehensive discussion of treatment plant performance, including documentation of any blending or other bypass events, and compliance with the permit. This discussion shall include any corrective actions taken or planned, such as changes to facility equipment or operation practices that may be needed to achieve compliance, and any other actions taken or planned that are intended to improve the performance and reliability of wastewater collection, treatment, or disposal practices;

ii. List of approved analyses, including the following:

(a) List of analyses for which the Discharger is certified;

(b) List of analyses performed for the Discharger by a separate certified laboratory (copies of reports signed by the laboratory director of that laboratory need not be submitted but shall be retained onsite); and

(c) List of "waived" analyses, as approved;

iii. Plan view drawing or map showing the Discharger's facility, flow routing, and sampling and observation station locations; and

iv. Results of facility report reviews. The Discharger shall regularly review, revise, and update, as necessary, the Operation and Maintenance Manual, Contingency Plan, Spill Prevention Plan, and Wastewater Facilities Status Report so these documents remain useful and relevant to current practices. At a minimum, reviews shall be conducted annually. The Discharger shall describe or summarize its review and evaluation procedures, recommended or planned actions, and estimated time schedule for implementing these actions. The Discharger shall complete changes to these documents to ensure that they remain up-to-date.

D. Compliance Schedules – Not supplemented

E. Twenty-Four Hour Reporting – Supplement to Attachment D, Provision V.E

1. Oil or Other Hazardous Material Spills

a. Within 24 hours of becoming aware of a spill of oil or other hazardous material not contained onsite and completely cleaned up, the Discharger shall report as follows:

i. If the spill exceeds reportable quantities for hazardous materials listed in 40 C.F.R. part 302. The Discharger shall call the California Office of Emergency Services (800-852-7550).

ii. If the spill does not exceed reportable quantities for hazardous materials listed in 40 C.F.R., part 302, the Discharger shall call the Regional Water Board (510-622-2369).

b. The Discharger shall submit a written report to the Regional Water Board within five working days following either of the above telephone notifications unless directed otherwise by Regional Water Board staff. A report submitted electronically is acceptable. The written report shall include the following:

i. Date and time of spill, and duration if known;

ii. Location of spill (street address or description of location);

iii. Nature of material spilled;

iv. Quantity of material spilled;

v. Receiving water body affected, if any;

vi. Cause of spill;

vii. Estimated size of affected area;

viii. Observed impacts to receiving waters (e.g., oil sheen, fish kill, water discoloration);

ix. Corrective actions taken to contain, minimize, or clean up the spill;

x. Future corrective actions planned to prevent recurrence, and implementation schedule; and

xi. Persons or agencies notified.

2. Unauthorized Municipal Wastewater Treatment Plant Discharges[1]

a. Two-Hour Notification. For any unauthorized discharge that enters a drainage channel or surface water, the Discharger shall, as soon as possible, but not later than two hours after becoming aware of the discharge, notify the California Office of Emergency Services (800-852-7550) and the local health officer or director of environmental health with jurisdiction over the affected water body. Notification shall include the following:

i. Incident description and cause;

ii. Location of threatened or involved waterways or storm drains;

iii. Date and time that the unauthorized discharge started;

iv. Estimated quantity and duration of the unauthorized discharge (to the extent known), and estimated amount recovered;

v. Level of treatment prior to discharge (e.g., raw wastewater, primary-treated wastewater, or undisinfected secondary-treated wastewater); and

vi. Identity of person reporting the unauthorized discharge.

b. Five-Day Written Report. Within five business days following the two-hour notification, the Discharger shall submit a written report that includes, in addition to the information listed in Provision V.E.2.a, above, the following:

i. Methods used to delineate the geographical extent of the unauthorized discharge within receiving waters;

ii. Efforts implemented to minimize public exposure to the unauthorized discharge;

iii. Visual observations of the impacts (if any) noted in the receiving waters (e.g., fish kill, discoloration of receiving water) and extent of sampling if conducted;

[1] California Code of Regulations, Title 23, section 2250(b), defines an unauthorized discharge to be a discharge, not regulated by waste discharge requirements, of treated, partially-treated, or untreated wastewater resulting from the intentional or unintentional diversion of wastewater from a collection, treatment, or disposal system.

iv. Corrective measures taken to minimize the impact of the unauthorized discharge;

v. Measures to be taken to minimize the potential for a similar unauthorized discharge in the future;

vi. Summary of Spill Prevention Plan or Operation and Maintenance Manual modifications to be made, if necessary, to minimize the potential for future unauthorized discharges; and

vii. Quantity and duration of the unauthorized discharge, and the amount recovered.

F. Planned Changes – Not supplemented

G. Anticipated Noncompliance – Not supplemented

H. Other Noncompliance – Not supplemented

I. Other Information – Not supplemented

VI. STANDARD PROVISION – ENFORCEMENT – Not Supplemented

VII. ADDITIONAL PROVISIONS – NOTIFICATION LEVELS – Not Supplemented

VIII. DEFINITIONS – Addition to Attachment D

More definitions can be found in Attachment A of this NPDES Permit.

A. Arithmetic Calculations –

1. **Geometric Mean**. The antilog of the log mean or the back-transformed mean of the logarithmically transformed variables, which is equivalent to the multiplication of the antilogarithms. The geometric mean can be calculated with either of the following equations:

$$\text{Geometric Mean} = Anti\log\left(\frac{1}{N}\sum_{i=1}^{N} Log(C_i)\right)$$

Or

$$\text{Geometric Mean} = (C_1 \times C_2 \times \ldots \times C_N)^{1/N}$$

Where "N" is the number of data points for the period analyzed and "C" is the concentration for each of the "N" data points.

2. **Mass Emission Rate.** The rate of discharge expressed in mass. The mass emission rate is obtained from the following calculation for any calendar day:

$$\text{Mass emission rate (lb/day)} = \frac{8.345}{N}\sum_{i=1}^{N} Q_i\, C_i$$

$$\text{Mass emission rate (kg/day)} = \frac{3.785}{N}\sum_{i=1}^{N} Q_i\, C_i$$

In which "N" is the number of samples analyzed in any calendar day and "Q_i" and "C_i" are the flow rate (MGD) and the constituent concentration (mg/L) associated with each of the "N" grab samples that may be taken in any calendar day. If a composite sample is taken, "C_i" is the concentration measured in the composite sample and "Q_i" is the average flow rate occurring during the period over which the samples are composited. The daily concentration of a constituent measured over any calendar day shall be determined from the flow-weighted average of the same constituent in the combined waste streams as follows:

$$C_d = \text{Average daily concentration} = \frac{1}{Q_i}\sum_{i=1}^{N} Q_i\, C_i$$

In which "N" is the number of component waste streams and "Q" and "C" are the flow rate (MGD) and the constituent concentration (mg/L) associated with each of the "N" waste streams. "Q_t" is the total flow rate of the combined waste streams.

3. **Removal Efficiency.** The ratio of pollutants removed by the treatment facilities to pollutants entering the treatment facilities (expressed as a percentage). The Discharger shall determine removal efficiencies using monthly averages (by calendar month unless otherwise specified) of pollutant concentration of influent and effluent samples collected at about the same time and using the following equation (or its equivalent):

$$\text{Removal Efficiency (\%)} = 100 \times [1-(\text{Effluent Concentration}/\text{Influent Concentration})]$$

B. Blending – the practice of bypassing biological treatment units and recombining the bypass wastewater with biologically-treated wastewater.

C. Composite Sample – a sample composed of individual grab samples collected manually or by an automatic sampling device on the basis of time or flow as specified in the MRP. For flow-based composites, the proportion of each grab sample included in the composite sample shall be within plus or minus five percent (+/-5%) of the representative flow of the waste stream being measured at the time of grab sample collection. Alternatively, equal volume grab samples may be individually analyzed with the flow-weighted average calculated by averaging flow-weighted ratios of each grab sample analytical result. Grab samples comprising time-based composite samples shall be collected at intervals not greater than those specified in the MRP. The quantity of each grab sample comprising a time-based composite sample shall be a set of flow proportional volumes as specified in the MRP. If a particular time-based or flow-based composite sampling protocol is not specified in the MRP, the Discharger shall determine and implement the most representative protocol.

D. Duplicate Sample – a second sample taken from the same source and at the same time as an initial sample (such samples are typically analyzed identically to measure analytical variability).

E. **Grab Sample** – an individual sample collected during a short period not exceeding 15 minutes. Grab samples represent only the condition that exists at the time the sample is collected.

F. **Overflow** – the intentional or unintentional spilling or forcing out of untreated or partially-treated waste from a transport system (e.g., through manholes, at pump stations, or at collection points) upstream of the treatment plant headworks or from any part of a treatment plant.

G. **Priority Pollutants** – those constituents referred to in 40 C.F.R. part 122 as promulgated in the Federal Register, Vol. 65, No. 97, Thursday, May 18, 2000, also known as the California Toxics Rule.

H. **Untreated waste** – raw wastewater.

Table B

List of Monitoring Parameters, Analytical Methods, and Minimum Levels[1] (µg/L)

CTR No.	Pollutant/Parameter	Analytical Method[2]	GC	GCMS	LC	Color	FAA	GFAA	ICP	ICP MS	SPGFAA	HYD RIDE	CVAA	DCP
1	Antimony	204.2	—	—	—	—	10	5	50	0.5	5	0.5	—	1,000
2	Arsenic	206.3	—	—	—	20	—	2	10	2	2	1	—	1,000
3	Beryllium		—	—	—	—	20	0.5	2	0.5	1	—	—	1,000
4	Cadmium	200 or 213	—	—	—	—	10	0.5	10	0.25	0.5	—	—	1,000
5a	Chromium (III)	SM 3500	—	—	—	—	—	—	—	—	—	—	—	—
5b	Chromium (VI)	SM 3500	—	—	—	10	5	—	—	—	—	—	—	1,000
	Chromium (total)[3]	SM 3500	—	—	—	—	50	2	10	0.5	1	—	—	1,000
6	Copper	200.9	—	—	—	—	25	5	10	0.5	2	—	—	1,000
7	Lead	200.9	—	—	—	—	20	5	5	0.5	2	—	—	10,000
8	Mercury	1631 (note)[4]	—	—	—	—	—	—	—	—	—	—	—	—
9	Nickel	249.2	—	—	—	—	50	5	20	1	5	—	—	1,000
10	Selenium	200.8 or SM 3114B or C	—	—	—	—	—	5	10	2	5	1	—	1,000
11	Silver	272.2	—	—	—	—	10	1	10	0.25	2	—	—	1,000
12	Thallium	279.2	—	—	—	—	10	2	10	1	5	—	—	1,000
13	Zinc	200 or 289	—	—	—	—	20	—	20	1	10	—	—	—
14	Cyanide	SM 4500 CN^- C or I	—	—	—	5	—	—	—	—	—	—	—	—
15	Asbestos (only required for dischargers to MUN waters)[5]	0100.2 [6]	—	—	—	—	—	—	—	—	—	—	—	—
16	2,3,7,8-TCDD and 17 congeners (Dioxin)	1613	—	—	—	—	—	—	—	—	—	—	—	—
17	Acrolein	603	2.0	5	—	—	—	—	—	—	—	—	—	—
18	Acrylonitrile	603	2.0	2	—	—	—	—	—	—	—	—	—	—
19	Benzene	602	0.5	2	—	—	—	—	—	—	—	—	—	—
33	Ethylbenzene	602	0.5	2	—	—	—	—	—	—	—	—	—	—
39	Toluene	602	0.5	2	—	—	—	—	—	—	—	—	—	—
20	Bromoform	601	0.5	2	—	—	—	—	—	—	—	—	—	—
21	Carbon Tetrachloride	601	0.5	2	—	—	—	—	—	—	—	—	—	—
22	Chlorobenzene	601	0.5	2	—	—	—	—	—	—	—	—	—	—
23	Chlorodibromomethane	601	0.5	2	—	—	—	—	—	—	—	—	—	—
24	Chloroethane	601	0.5	2	—	—	—	—	—	—	—	—	—	—
25	2-Chloroethylvinyl Ether	601	1	1	—	—	—	—	—	—	—	—	—	—
26	Chloroform	601	0.5	2	—	—	—	—	—	—	—	—	—	—
75	1,2-Dichlorobenzene	601	0.5	2	—	—	—	—	—	—	—	—	—	—
76	1,3-Dichlorobenzene	601	0.5	2	—	—	—	—	—	—	—	—	—	—

[1] Minimum levels are from the *State Implementation Policy*. They are the concentration of the lowest calibration standard for that technique based on a survey of contract laboratories. Laboratory techniques are defined as follows: GC = Gas Chromatography; GCMS = Gas Chromatography/Mass Spectrometry; LC = High Pressure Liquid Chromatography; Color = Colorimetric; FAA = Flame Atomic Absorption; GFAA = Graphite Furnace Atomic Absorption; ICP = Inductively Coupled Plasma; ICPMS = Inductively Coupled Plasma/Mass Spectrometry; SPGFAA = Stabilized Platform Graphite Furnace Atomic Absorption (i.e., U.S. EPA 200.9); Hydride = Gaseous Hydride Atomic Absorption; CVAA = Cold Vapor Atomic Absorption; DCP = Direct Current Plasma.

[2] The suggested method is the U.S. EPA Method unless otherwise specified (SM = Standard Methods). The Discharger may use another U.S. EPA-approved or recognized method if that method has a level of quantification below the applicable water quality objective. Where no method is suggested, the Discharger has the discretion to use any standard method.

[3] Analysis for total chromium may be substituted for analysis of chromium (III) and chromium (VI) if the concentration measured is below the lowest hexavalent chromium criterion (11 ug/l).

[4] The Discharger shall use ultra-clean sampling (U.S. EPA Method 1669) and ultra-clean analytical methods (U.S. EPA Method 1631) for mercury monitoring. The minimum level for mercury is 2 ng/l (or 0.002 ug/l).

[5] MUN = Municipal and Domestic Supply. This designation, if applicable, is in the Findings of the permit.

[6] Determination of Asbestos Structures over 10 [micrometers] in Length in Drinking Water Using MCE Filters, U.S. EPA 600/R-94-134, June 1994.

CTR No.	Pollutant/Parameter	Analytical Method[2]	GC	GCMS	LC	Color	FAA	GFAA	ICP	ICP MS	SPGFAA	HYD RIDE	CVAA	DCP
77	1,4-Dichlorobenzene	601	0.5	2	—	—	—	—	—	—	—	—	—	—
27	Dichlorobromomethane	601	0.5	2	—	—	—	—	—	—	—	—	—	—
28	1,1-Dichloroethane	601	0.5	1	—	—	—	—	—	—	—	—	—	—
29	1,2-Dichloroethane	601	0.5	2	—	—	—	—	—	—	—	—	—	—
30	1,1-Dichloroethylene or 1,1-Dichloroethene	601	0.5	2	—	—	—	—	—	—	—	—	—	—
31	1,2-Dichloropropane	601	0.5	1	—	—	—	—	—	—	—	—	—	—
32	1,3-Dichloropropylene or 1,3-Dichloropropene	601	0.5	2	—	—	—	—	—	—	—	—	—	—
34	Methyl Bromide or Bromomethane	601	1.0	2	—	—	—	—	—	—	—	—	—	—
35	Methyl Chloride or Chloromethane	601	0.5	2	—	—	—	—	—	—	—	—	—	—
36	Methylene Chloride or Dichloromethane	601	0.5	2	—	—	—	—	—	—	—	—	—	—
37	1,1,2,2-Tetrachloroethane	601	0.5	1	—	—	—	—	—	—	—	—	—	—
38	Tetrachloroethylene	601	0.5	2	—	—	—	—	—	—	—	—	—	—
40	1,2-Trans-Dichloroethylene	601	0.5	1	—	—	—	—	—	—	—	—	—	—
41	1,1,1-Trichloroethane	601	0.5	2	—	—	—	—	—	—	—	—	—	—
42	1,1,2-Trichloroethane	601	0.5	2	—	—	—	—	—	—	—	—	—	—
43	Trichloroethene	601	0.5	2	—	—	—	—	—	—	—	—	—	—
44	Vinyl Chloride	601	0.5	2	—	—	—	—	—	—	—	—	—	—
45	2-Chlorophenol	604	2	5	—	—	—	—	—	—	—	—	—	—
46	2,4-Dichlorophenol	604	1	5	—	—	—	—	—	—	—	—	—	—
47	2,4-Dimethylphenol	604	1	2	—	—	—	—	—	—	—	—	—	—
48	2-Methyl-4,6-Dinitrophenol or Dinitro-2-methylphenol	604	10	5	—	—	—	—	—	—	—	—	—	—
49	2,4-Dinitrophenol	604	5	5	—	—	—	—	—	—	—	—	—	—
50	2-Nitrophenol	604	—	10	—	—	—	—	—	—	—	—	—	—
51	4-Nitrophenol	604	5	10	—	—	—	—	—	—	—	—	—	—
52	3-Methyl-4-Chlorophenol	604	5	1	—	—	—	—	—	—	—	—	—	—
53	Pentachlorophenol	604	1	5	—	—	—	—	—	—	—	—	—	—
54	Phenol	604	1	1	—	50	—	—	—	—	—	—	—	—
55	2,4,6-Trichlorophenol	604	10	10	—	—	—	—	—	—	—	—	—	—
56	Acenaphthene	610 HPLC	1	1	0.5	—	—	—	—	—	—	—	—	—
57	Acenaphthylene	610 HPLC	—	10	0.2	—	—	—	—	—	—	—	—	—
58	Anthracene	610 HPLC	—	10	2	—	—	—	—	—	—	—	—	—
60	Benzo(a)Anthracene or 1,2 Benzanthracene	610 HPLC	10	5	—	—	—	—	—	—	—	—	—	—
61	Benzo(a)Pyrene	610 HPLC	—	10	2	—	—	—	—	—	—	—	—	—
62	Benzo(b)Fluoranthene or 3,4 Benzofluoranthene	610 HPLC	—	10	10	—	—	—	—	—	—	—	—	—
63	Benzo(ghi)Perylene	610 HPLC	—	5	0.1	—	—	—	—	—	—	—	—	—
64	Benzo(k)Fluoranthene	610 HPLC	—	10	2	—	—	—	—	—	—	—	—	—
74	Dibenzo(a,h)Anthracene	610 HPLC	—	10	0.1	—	—	—	—	—	—	—	—	—
86	Fluoranthene	610 HPLC	10	1	0.05	—	—	—	—	—	—	—	—	—
87	Fluorene	610 HPLC	—	10	0.1	—	—	—	—	—	—	—	—	—
92	Indeno(1,2,3-cd) Pyrene	610 HPLC	—	10	0.05	—	—	—	—	—	—	—	—	—
100	Pyrene	610 HPLC	—	10	0.05	—	—	—	—	—	—	—	—	—
68	Bis(2-Ethylhexyl)Phthalate	606 or 625	10	5	—	—	—	—	—	—	—	—	—	—
70	Butylbenzyl Phthalate	606 or 625	10	10	—	—	—	—	—	—	—	—	—	—
79	Diethyl Phthalate	606 or 625	10	2	—	—	—	—	—	—	—	—	—	—
80	Dimethyl Phthalate	606 or 625	10	2	—	—	—	—	—	—	—	—	—	—
81	Di-n-Butyl Phthalate	606 or 625	—	10	—	—	—	—	—	—	—	—	—	—
84	Di-n-Octyl Phthalate	606 or 625	—	10	—	—	—	—	—	—	—	—	—	—
59	Benzidine	625	—	5	—	—	—	—	—	—	—	—	—	—

CTR No.	Pollutant/Parameter	Analytical Method[2]	GC	GCMS	LC	Color	FAA	GFAA	ICP	ICP MS	SPGFAA	HYD RIDE	CVAA	DCP
65	Bis(2-Chloroethoxy)Methane	625	—	5	—	—	—	—	—	—	—	—	—	—
66	Bis(2-Chloroethyl)Ether	625	10	1	—	—	—	—	—	—	—	—	—	—
67	Bis(2-Chloroisopropyl)Ether	625	10	2	—	—	—	—	—	—	—	—	—	—
69	4-Bromophenyl Phenyl Ether	625	10	5	—	—	—	—	—	—	—	—	—	—
71	2-Chloronaphthalene	625	—	10	—	—	—	—	—	—	—	—	—	—
72	4-Chlorophenyl Phenyl Ether	625	—	5	—	—	—	—	—	—	—	—	—	—
73	Chrysene	625	—	10	5	—	—	—	—	—	—	—	—	—
78	3,3'-Dichlorobenzidine	625	—	5	—	—	—	—	—	—	—	—	—	—
82	2,4-Dinitrotoluene	625	10	5	—	—	—	—	—	—	—	—	—	—
83	2,6-Dinitrotoluene	625	—	5	—	—	—	—	—	—	—	—	—	—
85	1,2-Diphenylhydrazine (note)[7]	625	—	1	—	—	—	—	—	—	—	—	—	—
88	Hexachlorobenzene	625	5	1	—	—	—	—	—	—	—	—	—	—
89	Hexachlorobutadiene	625	5	1	—	—	—	—	—	—	—	—	—	—
90	Hexachlorocyclopentadiene	625	5	5	—	—	—	—	—	—	—	—	—	—
91	Hexachloroethane	625	5	1	—	—	—	—	—	—	—	—	—	—
93	Isophorone	625	10	1	—	—	—	—	—	—	—	—	—	—
94	Naphthalene	625	10	1	0.2	—	—	—	—	—	—	—	—	—
95	Nitrobenzene	625	10	1	—	—	—	—	—	—	—	—	—	—
96	N-Nitrosodimethylamine	625	10	5	—	—	—	—	—	—	—	—	—	—
97	N-Nitrosodi-n-Propylamine	625	10	5	—	—	—	—	—	—	—	—	—	—
98	N-Nitrosodiphenylamine	625	10	1	—	—	—	—	—	—	—	—	—	—
99	Phenanthrene	625	—	5	0.05	—	—	—	—	—	—	—	—	—
101	1,2,4-Trichlorobenzene	625	1	5	—	—	—	—	—	—	—	—	—	—
102	Aldrin	608	0.005	—	—	—	—	—	—	—	—	—	—	—
103	α-BHC	608	0.01	—	—	—	—	—	—	—	—	—	—	—
104	β-BHC	608	0.005	—	—	—	—	—	—	—	—	—	—	—
105	γ-BHC (Lindane)	608	0.02	—	—	—	—	—	—	—	—	—	—	—
106	δ-BHC	608	0.005	—	—	—	—	—	—	—	—	—	—	—
107	Chlordane	608	0.1	—	—	—	—	—	—	—	—	—	—	—
108	4,4'-DDT	608	0.01	—	—	—	—	—	—	—	—	—	—	—
109	4,4'-DDE	608	0.05	—	—	—	—	—	—	—	—	—	—	—
110	4,4'-DDD	608	0.05	—	—	—	—	—	—	—	—	—	—	—
111	Dieldrin	608	0.01	—	—	—	—	—	—	—	—	—	—	—
112	Endosulfan (alpha)	608	0.02	—	—	—	—	—	—	—	—	—	—	—
113	Endosulfan (beta)	608	0.01	—	—	—	—	—	—	—	—	—	—	—
114	Endosulfan Sulfate	608	0.05	—	—	—	—	—	—	—	—	—	—	—
115	Endrin	608	0.01	—	—	—	—	—	—	—	—	—	—	—
116	Endrin Aldehyde	608	0.01	—	—	—	—	—	—	—	—	—	—	—
117	Heptachlor	608	0.01	—	—	—	—	—	—	—	—	—	—	—
118	Heptachlor Epoxide	608	0.01	—	—	—	—	—	—	—	—	—	—	—
119-125	PCBs: Aroclors 1016, 1221, 1232, 1242, 1248, 1254, 1260	608	0.5	—	—	—	—	—	—	—	—	—	—	—
126	Toxaphene	608	0.5	—	—	—	—	—	—	—	—	—	—	—

[7] Measurement for 1,2-Diphenylhydrazine may use azobenzene as a screen: if azobenzene is measured at >1 ug/l, then the Discharger shall analyze for 1,2-Diphenylhydrazine.

ATTACHMENT S

STORMWATER PROVISIONS, MONITORING, AND REPORTING REQUIREMENTS

November 2017

Contents

I. STANDARD PROVISIONS – PERMIT COMPLIANCE S-1
A. Stormwater Pollution Prevention Plan (SWPPP) S-1
B. Site Map S-1
C. List of Industrial Materials S-2
D. Potential Pollutant Sources S-2
E. Assessment of Potential Pollutant Sources S-3
F. Minimum Best Management Practices (BMPs) S-4
G. Action Levels and Advanced BMPs S-5
H. BMP Descriptions S-6
I. Annual Comprehensive Facility Compliance Evaluation S-6
II. STANDARD PROVISIONS – MONITORING S-7
A. Visual Observations S-7
1. Monthly Visual Observations S-7
2. Sampling Event Visual Observations S-7
3. Visual Observation Records S-8
4. SWPPP Revisions S-8
B. Sampling and Analysis S-8
III. STANDARD PROVISIONS – REPORTING S-8
A. Annual Stormwater Report S-8
IV. DEFINITIONS S-9

STORMWATER PROVISIONS

APPLICABILITY

These stormwater provisions only apply to facilities that do not direct all stormwater flows from process areas to a wastewater treatment plant's headworks or do not enroll in NPDES Permit No. CAS000001 (General Permit for Stormwater Discharges Associated with Industrial Activities).

I. STANDARD PROVISIONS - PERMIT COMPLIANCE

A. Stormwater Pollution Prevention Plan (SWPPP). The Discharger shall prepare a SWPPP that includes the following elements:

1. Facility name and contact information;

2. Site map;

3. List of industrial materials;

4. Description of potential pollution sources;

5. Assessment of potential pollutant sources;

6. Minimum Best Management Practices (BMPs);

7. Advanced BMPs, if applicable;

8. Monitoring implementation plan;

9. Annual comprehensive facility compliance evaluation; and

10. Date SWPPP initially prepared and dates of each SWPPP amendment.

The SWPPP shall be designed in accordance with good engineering practices to achieve the following objectives:

- Identify and evaluate all pollutant sources that may affect stormwater discharge quality;
- Identify, assign, and implement control measures and management practices to reduce or prevent pollutants in stormwater discharges; and
- Identify and describe conditions or circumstances that may require revisions to the SWPPP.

The SWPPP shall be retained onsite, revised whenever necessary, and made available upon request of any Regional Water Board representative. The SWPPP may be combined with the Spill Prevention Plan (see Attachment G Provision I.C.2).

B. Site Map. The Discharger shall prepare one or more site maps that include notes, legends, a north arrow, and other data as appropriate to ensure the map is clear, legible and understandable, including the following:

1. The facility boundary, stormwater drainage areas within the facility boundary, and portions of any drainage area impacted by discharges from surrounding areas (the maps shall include the flow direction of each drainage area, on-facility surface water bodies, areas of soil erosion, and locations of nearby water bodies [e.g., rivers, lakes, wetlands] or municipal storm drain inlets that may receive the facility's industrial stormwater discharges and authorized non-stormwater discharges);

2. Locations of stormwater collection and conveyance systems, associated discharge locations, and direction of flow (the maps shall include sample locations if different than the discharge locations);

3. Locations and descriptions of structural control measures (e.g., catch basins, berms, detention ponds, secondary containment, oil/water separators, diversion barriers) that affect industrial stormwater discharges, authorized non-stormwater discharges, and run-on;

4. Identification of all impervious areas, including paved areas, buildings, covered storage areas, or other roofed structures;

5. Locations where materials are directly exposed to precipitation and the locations where identified significant spills or leaks have occurred; and

6. Areas of industrial activity (the maps shall identify all industrial storage areas and storage tanks, shipping and receiving areas, fueling areas, vehicle and equipment storage and maintenance areas, material handling and processing areas, waste treatment and disposal areas, dust or particulate generating areas, cleaning and material reuse areas, and other areas of industrial activity that may have potential pollutant sources).

C. **List of Industrial Materials.** The SWPPP shall contain a list of industrial materials handled at the facility and the locations where each material is stored, received, shipped, and handled, as well as the typical quantities and handling frequency.

D. **Potential Pollutant Sources.** The Discharger shall describe and assess potential stormwater pollutant sources, including the following:

1. **Industrial Processes.** Industrial processes may include manufacturing, cleaning, maintenance, recycling, and disposal. The SWPPP shall describe the type, characteristics, and approximate quantity of industrial materials used and areas protected by containment structures and the corresponding containment capacity.

2. **Material Handling and Storage Areas.** The SWPPP shall describe the type, characteristics, and quantity of industrial materials handled or stored; shipping, receiving, and loading procedures; spill and leak prevention and response procedures; and areas protected by containment structures and the corresponding containment capacity.

3. **Dust and Particulate Generating Activities.** The SWPPP shall describe the discharge locations, source type, and characteristics of the dust or particulate pollutant.

4. **Significant Spills and Leaks.** The Discharger shall evaluate the facility for areas where spills and leaks can occur. The SWPPP shall list any industrial materials spilled or leaked in significant quantities and discharged from the facility's stormwater conveyance system

within the previous five years, including but not limited to any chemicals identified in 40 C.F.R. section 302 as reported on U.S. EPA Form R and any oil and hazardous substances discharged in excess of reportable quantities (40 C.F.R. §§ 110, 117, and 302). The SWPPP shall also list any industrial materials spilled or leaked in significant quantities that had the potential to be discharged from the facility's stormwater conveyance system within the previous five years. For each listed industrial material spill and leak, the SWPPP shall include the location, characteristics, and approximate quantity of the material spilled or leaked; the approximate quantity of the material discharged; the cleanup or remedial actions taken or planned; the approximate quantity of remaining material that could be discharged; and the preventive measures taken to ensure that spills or leaks do not reoccur.

5. **Non-Stormwater Discharges.** The SWPPP shall describe all non-stormwater discharges, including the source, quantity, frequency, characteristics, and associated drainage area, and indicate whether these discharges are authorized or unauthorized.

6. **Erodible Surfaces.** The SWPPP shall describe any facility locations where soil erosion may be caused by industrial activity, contact with stormwater, authorized and unauthorized non-stormwater discharges, or run-on from areas surrounding the facility.

E. Assessment of Potential Pollutant Sources. The SWPPP shall include a narrative assessment of all areas of industrial activity with potential industrial pollutant sources, including, at a minimum, the following:

1. Facility areas with likely sources of pollutants;

2. Pollutants likely to be present in industrial stormwater discharges;

3. Approximate quantity, physical characteristics (e.g., liquid, powder, solid), and locations of each industrial material handled, produced, stored, recycled, or disposed;

4. Degree to which the pollutants associated with such materials may be exposed to, and mobilized by, contact with stormwater;

5. Direct and indirect pathways by which pollutants may be exposed to stormwater;

6. Sampling, visual observation, and inspection records;

7. Effectiveness of existing BMPs to reduce or prevent pollutants in industrial stormwater discharges; and

8. Estimated effectiveness of implementing, to the extent feasible, minimum BMPs to reduce or prevent pollutants in industrial stormwater discharges.

Based upon the assessment, the SWPPP shall identify facility areas where the minimum BMPs described in Provision I.F, below, will not adequately reduce or prevent pollutants in stormwater discharges and any necessary advanced BMPs, as described in Provision I.G, below, for those areas.

F. Minimum Best Management Practices (BMPs). The Discharger shall, to the extent feasible, implement and maintain the following BMPs:

1. **Good Housekeeping.** The Discharger shall do the following:

   a. Observe all outdoor areas associated with industrial activity, including stormwater discharge locations, drainage areas, conveyance systems, waste handling and disposal areas, and perimeter areas affected by off-facility materials or stormwater run-on to determine housekeeping needs. Any identified debris, waste, spills, tracked materials, or leaked materials shall be cleaned and disposed of properly;

   b. Minimize or prevent material tracking;

   c. Minimize dust generated from industrial materials or activities;

   d. Ensure that all facility areas impacted by rinse or wash waters are cleaned as soon as possible;

   e. Cover all stored industrial materials that can be readily mobilized by contact with stormwater;

   f. Contain all stored non-solid industrial materials or wastes (e.g., particulates, powders, shredded paper) that can be transported or dispersed by the wind or contact with stormwater;

   g. Prevent disposal of any rinse or wash waters or industrial materials into the stormwater conveyance system;

   h. Minimize stormwater discharges from non-industrial areas (e.g., stormwater flows from employee parking areas) that contact industrial areas of the facility; and,

   i. Minimize authorized non-stormwater discharges from non-industrial areas (e.g., potable water, fire hydrant testing) that contact areas of the sanitary or industrial facility.

2. **Preventative Maintenance.** The Discharger shall (1) identify all equipment and systems used outdoors that may spill or leak pollutants, (2) observe the identified equipment and systems to detect leaks or identify conditions that may result in the development of leaks, (3) establish an appropriate schedule for maintenance of identified equipment and systems, and (4) establish procedures for prompt maintenance and repair of equipment and maintenance of systems when conditions exist that may result in the development of spills or leaks.

3. **Spill and Leak Prevention and Response.** The Discharger shall (1) establish procedures and controls to minimize spills and leaks; (2) develop and implement spill and leak response procedures to prevent industrial materials from discharging through the stormwater conveyance system (spilled or leaked industrial materials shall be cleaned promptly and disposed of properly); (3) identify and describe all necessary and appropriate spill and leak response equipment, locations of spill and leak response equipment, and spill or leak response equipment maintenance procedures; and (4) identify and train appropriate spill and leak response personnel.

4. **Material Handling and Waste Management.** The Discharger shall do the following:

a. Prevent or minimize handling of industrial materials or wastes that can be readily mobilized by contact with stormwater during a storm;

b. Contain all stored non-solid industrial materials or wastes (e.g., particulates, powers, shredded paper) that can be transported or dispersed by the wind or contact with stormwater;

c. Cover industrial waste disposal containers and industrial material storage containers that contain industrial materials when not in use;

d. Divert run-on and stormwater generated from within the facility away from all stockpiled materials;

e. Clean all spills of industrial materials or wastes that occur during handling in accordance with spill response procedures; and,

f. Observe and clean, as appropriate, any outdoor material or waste handling equipment or containers that can be contaminated by contact with industrial materials or wastes.

5. **Erosion and Sediment Control.** The Discharger shall (1) implement effective wind erosion controls; (2) provide effective stabilization for inactive areas, finished slopes, and other erodible areas prior to a forecasted storms; (3) maintain effective perimeter controls and stabilize site entrances and exits to sufficiently control discharges of erodible materials; and (4) divert run-on and stormwater generated from within the facility away from erodible materials.

6. **Employee Training.** The Discharger shall ensure that all personnel implementing the SWPPP are properly trained with respect to BMP implementation, BMP effectiveness evaluations, visual observations, and monitoring activities. The Discharger shall identify which personnel need to be trained, their responsibilities, and the type of training they are to receive and maintain documentation of completed training and the personnel that received the training with the SWPPP.

7. **Quality Assurance and Record Keeping.** The Discharger shall (1) develop and implement management procedures to ensure that appropriate personnel implement all SWPPP elements; (2) develop methods of tracking and recording BMP implementation; and (3) maintain BMP implementation records, training records, and records related to any spills and clean-up related response activities for a minimum of five years.

G. Action Levels and Advanced BMPs. If the Discharger samples total suspended solids (TSS), oil and grease, or pH in excess of an action level in Table A, the Discharger shall review the SWPPP to identify appropriate modifications to existing BMPs or additional BMPs as necessary to reduce pollutant discharge concentrations to levels below the action level. The Discharger shall revise the SWPPP accordingly before the next storm, if possible, or as soon as practical, and in no event later than three months following the exceedance.

Table A

Stormwater Action Levels

Parameter	Unit	Instantaneous Action Level	Annual Action Level
Total Suspended Solids	mg/L	400	100
Oil & Grease	mg/L	25	15
pH	standard units	6.0-9.0 [1]	—

Footnote:
[1] Values below or above this range require action.

If, upon subsequent monitoring, the pollutants measured in Table A continue to exceed their respective action levels, the Discharger shall further evaluate its BMPs and update its SWPPP accordingly to include advanced BMPs in addition to the minimum BMPs described in Provision I.F, above. The Discharger shall, to the extent feasible, implement and maintain any advanced BMPs identified pursuant to Provision I.E.8, above, as necessary to reduce or prevent discharges of pollutants in stormwater discharges in a manner that reflects best industry practice considering technological availability and economic practicability and achievability. Advanced BMPs may include one or more of the following:

1. **Exposure Minimization BMPs**. These include storm resistant shelters (either permanent or temporary) that prevent the contact of stormwater with identified industrial materials.

2. **Stormwater Containment and Discharge Reduction BMPs.** These include BMPs that divert, infiltrate, reuse, contain, retain, or reduce the volume of stormwater runoff.

3. **Treatment Control BMPs.** These include mechanical, chemical, biologic, or any other treatment technology that will meet the treatment design standard.

H. BMP Descriptions. The SWPPP shall identify each BMP being implemented at the facility, including the following:

1. The pollutants the BMP is designed to reduce or prevent;

2. The frequency, times of day, or conditions when the BMP is scheduled for implementation;

3. The locations within each area of industrial activity or industrial pollutant source where the BMP shall be implemented;

4. The individual responsible for implementing the BMP;

5. The procedures, including maintenance procedures, and instructions to implement the BMP effectively; and

6. The equipment and tools necessary to implement the BMP effectively.

I. Annual Comprehensive Facility Compliance Evaluation. The Discharger shall conduct one annual facility evaluation for each reporting year (July 1 to June 30). If the Discharger conducts an annual evaluation fewer than 8 months, or more than 16 months, after it conducts the previous annual evaluation, it shall document the justification for doing so. The Discharger shall revise the

SWPPP, as appropriate, and implement the revisions within 90 days of the annual evaluation. At a minimum, the annual evaluations shall consist of the following:

1. A review of all sampling, visual observation, and inspection records conducted during the previous reporting year;

2. An inspection of all areas of industrial activity and associated potential pollutant sources for evidence of, or the potential for, pollutants entering the stormwater conveyance system;

3. An inspection of all drainage areas previously identified as having no exposure to industrial activities and materials;

4. An inspection of equipment needed to implement the BMPs; and

5. An assessment of any other factors needed to comply with the requirements of the Annual Stormwater Report (see Provision III.A, below).

II. STANDARD PROVISIONS – MONITORING

A. Visual Observations

1. Monthly Visual Observations

a. At least once per month, the Discharger shall visually observe each drainage area for the following:

i. The presence or indication of prior, current, or potential unauthorized non-stormwater discharges and their sources;

ii. Authorized non-stormwater discharges, sources, and associated BMPs; and

iii. Outdoor industrial equipment and storage areas, outdoor industrial activities areas, BMPs, and all other potential sources of industrial pollutants.

b. The monthly visual observations shall be conducted during daylight hours of scheduled facility operating hours and on days without precipitation.

c. The Discharger shall provide an explanation in the Annual Stormwater Report for uncompleted monthly visual observations (see Provision III.A, below).

2. Sampling Event Visual Observations. Sampling event visual observations shall be conducted at the same time sampling occurs at a discharge location. At each discharge location where a sample is obtained, the Discharger shall observe the discharge of stormwater associated with industrial activity.

a. The Discharger shall ensure that visual observations of stormwater discharged from containment sources (e.g., secondary containment or storage ponds) are conducted at the time that the discharge is sampled.

b. If the Discharger employs volume-based or flow-based treatment BMPs, it shall sample any bypass that occurs while the visual observations and sampling of stormwater discharges are conducted.

c. The Discharger shall visually observe and record the presence or absence of floating and suspended materials, oil and grease, discolorations, turbidity, odors, trash/debris, and sources of any discharged pollutants.

d. If a discharge location is not visually observed during the sampling event, the Discharger shall record which discharge locations were not observed during sampling or that there was no discharge from the discharge location.

e. The Discharger shall provide an explanation in the Annual Stormwater Report for uncompleted sampling event visual observations (see Provision III.A, below).

3. Visual Observation Records. The Discharger shall maintain records of all visual observations. Records shall include the date, approximate time, locations observed, presence and probable source of any observed pollutants, name of persons who conducted the observations, and any response actions and/or additional SWPPP revisions necessary in response to the visual observations.

4. SWPPP Revisions. The Discharger shall revise its BMPs as necessary when the visual observations indicate pollutant sources have not been adequately addressed.

B. Sampling and Analysis

1. The Discharger shall collect and analyze stormwater samples as specified in the MRP.

2. Samples shall be (i) representative of stormwater associated with industrial activities and any commingled authorized non-stormwater dischargers; or (ii) associated with the discharge of contained stormwater.

3. On a facility-specific basis, the Discharger shall also analyze additional parameters that serve as indicators of the presence of all industrial pollutants identified in the pollutant source assessment. These additional parameters may be modified (added or removed) in accordance with any updated SWPPP pollutant source assessment.

III. STANDARD PROVISIONS – REPORTING

A. Annual Stormwater Report. The results of the Discharger's Annual Comprehensive Facility Compliance Evaluation shall be reported in the Annual Stormwater Report to the Regional Water Board no later than July 30. The Discharger shall include in the Annual Stormwater Report the following:

1. A compliance checklist that indicates whether the Discharger has complied with or addressed all applicable requirements of the SWPPP;

2. An explanation for any non-compliance requirements within the reporting year, as indicated in the compliance checklist;

3. An identification, including page numbers and sections, of all revisions made to the SWPPP within the reporting year; and

4. The date(s) of the annual evaluation.

IV. DEFINITIONS

B. **Authorized Non-Stormwater Discharges –** Non-stormwater discharges are authorized if they meet the following conditions:

1. Fire-hydrant and fire prevention or response system flushing;

2. Potable water sources, including potable water related to the operation, maintenance, or testing of potable water systems;

3. Drinking fountain water and atmospheric condensate, including refrigeration, air conditioning, and compressor condensate;

4. Irrigation drainage and landscape watering, provided that all pesticides, herbicides, and fertilizers have been applied in accordance with manufacturer's labels;

5. Uncontaminated natural springs, groundwater, foundation drainage, footing drainage;

6. Seawater infiltration where the seawater is discharged back into the source; or,

7. Incidental windblown mist from cooling towers that collects on rooftops or adjacent portions of the facility, but not intentional discharges from cooling towers (e.g., "piped" cooling tower blowdown or drains).

C. **Stormwater –** stormwater runoff, snow melt runoff, and surface runoff and drainage, excluding infiltration and runoff from agricultural land.