LEGEND

ACU	AIR CONDITIONING UNIT
AFF	ABOVE FINISHED FLOOR
AHJ	AUTHORITY HAVING JURISDICTION
AHU	AIR HANDLING UNIT
BDD	BACKDRAFT DAMPER
BHP	BRAKE HORSEPOWER
BTUH	BRITISH THERMAL UNIT PER HOUR
C	COMMON
CAP	CAPACITY
CC	COOLING COIL
CD	CEILING DIFFUSER
CFM	CUBIC FEET PER MINUTE
CLG	CEILING, COOLING
CO	CLEANOUT
COMB	COMBUSTION
CONT	CONTINUE, CONTROL
CONTR	CONTRACTOR
COP	COEFFICIENT OF PERFORMANCE
CWS	CHILLED WATER SUPPLY
CWR	CHILLED WATER RETURN
D	DIAMETER
DB	DRY BULB, DECIBEL
DEG	DEGREE
DIM	DIMENSION
DISCH	DISCHARGE
DN	DOWN
EA	EXHAUST AIR
EAT	ENTERING AIR TEMPERATURE
EER	ENERGY EFFICIENCY RATIO
EF	EXHAUST FAN
EFF	EFFICIENCY
EG	EXHAUST GRILLE, ENGINE GENERATOR
ELEC	ELECTRIC
EQUIV	EQUIVALENT
ESP	EXTERNAL STATIC PRESSURE
EXH	EXHAUST
EXT	EXTERIOR, EXTERNAL
F	FAHRENHEIT
FD	FIRE DAMPER
FCU	FAN COIL UNIT
FLR	FLOOR
FPM	FEET PER MINUTE
FPS	FEET PER SECOND
FSD	FIRE/SMOKE DAMPER
G	GAS
GRD	GRILLES, REGISTERS, AND DIFFUSERS
GWB	GYPSUM WALLBOARD
HORIZ	HORIZONTAL
HP	HORSEPOWER, HEAT PUMP
HRU	HEAT RECOVERY UNIT
HVAC	HEATING, VENTILATING, AND AIR CONDITIONING
HVU	HEATING AND VENTILATION UNIT
HWR	HIGH WALL RETURN, HOT WATER RETURN
HWS	HIGH WALL SUPPLY, HOT WATER SUPPLY
HX	HEAT EXCHANGER
ID	INDIRECT DRAIN, INSIDE DIAMETER
IN	INCH
KW	KILOWATT
L	LONG, LENGTH
LB	POUND
LWR	LOW WALL RETURN
LWS	LOW WALL SUPPLY
MBH	THOUSAND BTU PER HOUR
MECH	MECHANICAL
MCA	MINIMUM CIRCUIT AMPACITY
MOCP	MAXIMUM OVER CURRENT PROTECTION
MTD	MOUNTED
OSA	OUTDOOR AIR
OBD	OPPOSED BLADE DAMPER
OD	OUTSIDE DIMENSION OR DIAMETER
OPNG	OPENING
P	PUMP
PD	PRESSURE DROP
POC	POINT OF CONNECTION
PRV	PRESSURE REDUCING VALVE
PSIG	POUNDS PER SQUARE INCH GAUGE
RA	RETURN AIR
REF	REFERENCE
RF	RELIEF FAN
RG	RETURN GRILLE
RPM	REVOLUTIONS PER MINUTE
SA	SUPPLY AIR
SCH	SCHEDULE
SF	SUPPLY FAN, SQUARE FOOT
SENS	SENSIBLE
SG	SUPPLY GRILLE
SMACNA	SHEET METAL AND AIR CONDITIONING CONTRACTORS NATIONAL ASSOCIATION
SO	SCREENED OPENING
SP	STATIC PRESSURE
SS	STAINLESS STEEL, SANITARY SEWER
SQ	SQUARE
TG	TRANSFER GRILLE
TYP	TYPICAL
UH	UNIT HEATER
UON	UNLESS OTHERWISE NOTED
V	VENT
VENT	VENTILATION, VENTILATOR
VTR	VENT THRU ROOF
W	WASTE, WATT, WIDE
WB	WET BULB (TEMPERATURE)

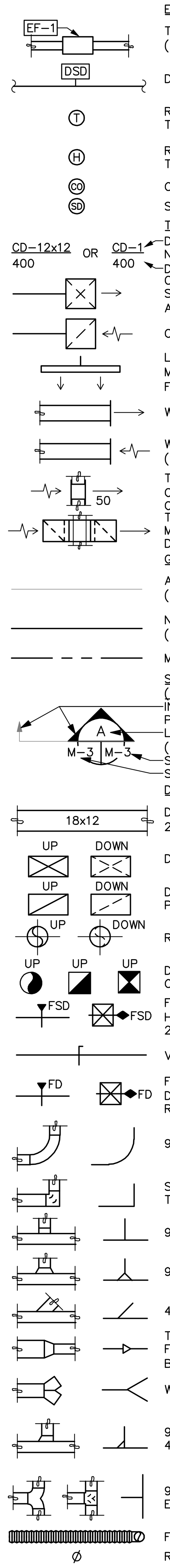

EQUIPMENT

TYPICAL EQUIPMENT DESIGNATION (EXHAUST FAN SHOWN)

DUCT SMOKE DETECTOR

ROOM THERMOSTAT OR TEMPERATURE TRANSMITTER

ROOM HUMIDISTAT OR HUMIDITY TRANSMITTER

CARBON MONOXIDE SENSOR

SMOKE DETECTOR

TERMINALS

DIFFUSER/GRILLE TYPE, AND NUMBER OR SIZE

DESIGN CFM (WHERE APPLICABLE)

CEILING DIFFUSER (FLOW ARROWS SHOWN FOR NON SYMMETRICAL AIRFLOW)

CEILING RETURN/EXHAUST GRILLE

LINEAR DIFFUSER, CEILING OR WALL MOUNTED (FLOW ARROWS SHOWN FOR NON SYMMETRICAL AIRFLOW)

WALL SUPPLY GRILLE (SG)

WALL RETURN/EXHAUST GRILLE (RG, EG)

TRANSFER GRILLE (TG), DUCT CONNECTED, WALL MOUNTED W/ OPTIONAL CFM SHOWN

TRANSFER GRILLE, CEILING MOUNTED WITH FULL-SIZED LINED DUCT CONNECTION

GENERAL

ARCHITECTURAL BACKGROUND (THIN LINE)

NEW MECHANICAL WORK (HEAVY LINE)

MATCHLINE OR PROPERTY LINE

SECTION IDENTIFICATION (DETAIL SIMILAR)

INDICATES DIRECTION OF CUTTING PLANE

LETTER INDICATES SECTION (NO. INDICATES DETAIL)

SHEET # WHERE SECTION IS DRAWN

SHEET # WHERE SECTION IS TAKEN

DUCTWORK

DUCT (1ST FIGURE = SIDE SHOWN, 2ND FIGURE = SIDE NOT SHOWN)

DUCT SECTION, POSITIVE PRESSURE

DUCT SECTION, NEGATIVE PRESSURE

ROUND DUCT SECTION

DUCT PENETRATION THRU FLOOR OR ROOF

FIRE/SMOKE DAMPER (--◀ = HORIZ DUCT, --◆ = VERT DUCT), 2-HR RATED, UON

VOLUME DAMPER

FIRE DAMPER (--◀ = HORIZ DUCT, --◆ = VERT DUCT), 2-HR RATED, UON

90° ELBOW, R/D OR R/W=1.5

SQUARE CORNER ELBOW WITH TURNING VANES

90° TAKE-OFF OR TEE

90° CONICAL TAKE-OFF

45° LATERAL TAKE-OFF

TRANSITION OR REDUCER (FOT = FLAT ON TOP, FOB = FLAT ON BOTTOM)

WYE FITTING

90° RECTANGULAR TAKE-OFF WITH 45° TAPER

90° DIVERGING RECTANGULAR TEE, EITHER RADIUS OR TURNING VANES

FLEXIBLE DUCT

ROUND DUCT INDICATOR

GENERAL NOTES

GENERAL NOTES – MECHANICAL

1. REFERENCE TO RELATED WORK: "REF" INDICATIONS DENOTE WORK COVERED ELSEWHERE (ARCHITECTURAL, STRUCTURAL, CIVIL, ELECTRICAL, LANDSCAPE, OR KITCHEN), OR ITEM BASED ON A SPECIFIC MANUFACTURER'S DIMENSIONS (VERIFY).
2. ELECTRICAL CHARACTERISTICS: REFER TO ELECTRICAL DRAWINGS FOR ELECTRICAL CHARACTERISTICS (VOLTAGES, ETC). OF MECHANICAL EQUIPMENT, UNLESS OTHERWISE INDICATED.
3. CODES: COMPLETE INSTALLATION OF THE MECHANICAL SYSTEM SHALL BE PER THE APPLICABLE BUILDING, MECHANICAL, ENERGY, PLUMBING, FIRE, AND HEALTH CODES AND REGULATIONS AS ADOPTED BY THE LOCAL AHJ.
4. PREPARE AND SUBMIT FOR REVIEW A SHOP DRAWING BASED ON FINAL STRUCTURAL SHOP DRAWINGS FOR LOCATING AND ROUTING ALL DUCTWORK, DAMPERS, EQUIPMENT, PIPING, ETC.
   A. COORDINATE FLOOR AND BEAM PENETRATIONS WITH STRUCTURAL.
   B. COORDINATE FINAL LOCATION AND ROUTING WITH CEILING, LIGHTS, WALLS, FIRE SPRINKLER PIPING, AND OTHER TRADES WORK.
   C. INCLUDE ADDITIONAL OFFSETS, ELBOWS, ROUTING, EQUIVALENT DUCT SIZING EXCHANGE, RELOCATING, ETC. AS REQUIRED FOR A COMPLETE OPERATING MECHANICAL SYSTEM.
   D. PROVIDE SHOP DRAWINGS AT NO ADDITIONAL COST TO THE OWNER.
5. MECHANICAL CONTRACTOR SHALL LOCATE AND COORDINATE EXACT LOCATION OF ALL MECHANICAL EQUIPMENT WITHIN THE STRUCTURE.
6. ACCESS DOORS: COORDINATE WITH ARCHITECT AND LOCATE ALL ACCESS DOORS ON SHOP DRAWINGS PRIOR TO BEGINNING OF CONSTRUCTION. ACCESS DOORS IN FIRE RATED STRUCTURE SHALL BE FIRE RATED. VERIFY ACCESS DOOR LOCATIONS WITH GENERAL CONTRACTOR PRIOR TO BIDDING.
7. RATED PENETRATION: DUCT PENETRATIONS THROUGH RATED ENCLOSURES SHALL BE FIRE/SMOKE DAMPERED PER THE LATEST EDITION OF THE UNDERWRITERS LABORATORIES(UL) FIRE RESISTANCE WITH HOURLY RATINGS FOR THROUGH-PENETRATION FIRE STOPS SYSTEM VOLUME #2, OR SHALL BE INSTALLED IN STRICT ACCORDANCE WITH THE MANUFACTURER'S UL LISTINGS (3M OR EQUIVALENT). DETERMINE REQUIREMENTS WITH GENERAL CONTRACTOR PRIOR TO BID.
8. EXHAUST OUTLETS: SOURCE-SPECIFIC FANS SHALL BE VENTED TO OUTDOORS WITH A MINIMUM 3' CLEARANCE BETWEEN VENT OUTLETS AND BUILDING OPENINGS, AND 10' MINIMUM BETWEEN VENT OUTLETS AND MECHANICAL AIR INTAKES.
9. ROOF PENETRATIONS: SEE ARCHITECTURAL DRAWINGS FOR ROOF CAP, ROOF CURB, ROOF DRAIN, AND VTR DETAILS.
10. EXPOSED PIPING: PROVIDE CHROME PLATING FOR EXPOSED PIPING IN FINISHED ROOMS.
11. PENETRATIONS: PROVIDE ESCUTCHEON PLATES FOR EXPOSED PIPING PENETRATIONS AND SHEET METAL FLASHING FOR EXPOSED DUCTWORK PENETRATIONS.
12. SHAFT AND PLENUM CONNECTIONS: SEAL CONNECTIONS TO AIR SHAFTS AIRTIGHT. PROVIDE AIRTIGHT SEAL AROUND PENETRATIONS IN AIR PLENUMS.
13. LIGHT FIXTURE CLEARANCE: COORDINATE LOCATIONS OF MECHANICAL WORK TO PROVIDE CLEARANCES OVER LIGHTING FIXTURES FOR REMOVAL AND REPLACEMENT.
14. CABLE TRAYS: DUCTWORK AND PIPING INSTALLED ADJACENT TO ELECTRICAL CABLE TRAYS SHALL ALLOW MINIMUM ACCESS OF 6" ABOVE AND TO THE SIDE OF CABLE TRAYS.
15. MOTORS: COMPLY WITH ENERGY CODE ENFORCED BY AHJ FOR MINIMUM EFFICIENCIES UNDER FULL LOAD.
16. ACCESS CLEARANCES FOR MAINTENANCE AND REPLACEMENT: VERIFY PHYSICAL DIMENSIONS OF EQUIPMENT TO ENSURE THAT ACCESS CLEARANCES CAN BE MET. COORDINATE LOCATIONS OF MECHANICAL WORK AND WORK OF OTHER TRADES TO PROVIDE ACCESS CLEARANCES FOR SERVICE AND MAINTENANCE.

COORDINATION REQUIREMENTS

1. PIPING: COORDINATE WITH STRUCTURAL FOR EXACT LOCATION OF ALL STRUCTURAL FRAMING AND FOOTINGS AND FINALIZE THE EXACT ROUTING OF ALL PIPES WITH STRUCTURAL AND AT THE SITE PRIOR AND DURING THE CONSTRUCTION.
2. DUCTWORK: LOCATE AND COORDINATE THE EXACT LOCATION OF DUCTWORK WITH STRUCTURAL PLANS AND WITH THE GENERAL CONTRACTOR PRIOR TO INSTALLATION OF ANY STRUCTURE OR EQUIPMENT. COORDINATE WITH FRAMING CONTRACTOR TO ASSURE JOIST SPACES LINE UP WHEN DUCTWORK MUST PASS THROUGH DIFFERENT JOIST SPACES.
3. ADJUSTMENTS: ALL EQUIPMENT, MOTORS, FANS GAS BURNERS, IGNITION DEVICES, DRIVES, ETC. SHALL BE ADJUSTED AND BALANCED TO OPERATE AT SPECIFIED RATINGS AS REQUIRED FOR THIS PROJECT SITE AND ACCOUNTING FOR ELEVATION ABOVE SEA LEVEL.
4. APPROVALS: MECHANICAL AND PLUMBING EQUIPMENT SHALL BE APPROVED FOR INSTALLATION IN THE PROJECT LOCATION AND SHALL HAVE ALL CERTIFICATIONS AND RATINGS TO MEET ALL ENERGY, POLLUTION, ENVIRONMENTAL, SEISMIC, ETC. CODES AND REGULATIONS. THE CONTRACTOR SHALL COORDINATE WITH HIS MANUFACTURE SUPPLIERS AND SHALL INCLUDE ALL COSTS REQUIRED TO MEET THESE REQUIREMENTS IN HIS BID.

INSULATION/LINING NOTES

1. ENERGY CODE: AS A MINIMUM, COMPLY WITH THICKNESSES AND TYPES LISTED IN ENERGY CODE ENFORCED BY AHJ.
2. REFER TO PROJECT MANUAL FOR INSULATION REQUIREMENTS.

FIRE ALARM NOTES

FIRE ALARM CONTRACTOR SHALL PROVIDE ACTUATION DEVICE FOR COMBINATION FIRE SMOKE DAMPERS PER SECTION 717.3.3.1 OF THE BUILDING CODE:

1. WHERE A SMOKE DAMPER IS INSTALLED ABOVE SMOKE BARRIER A SPOT-TYPE DETECTOR LISTED FOR RELEASING SERVICE SHALL BE INSTALLED ON EITHER SIDE OF THE SMOKE BARRIER DOOR OPENING.
2. WHERE A COMBINATION FIRE SMOKE DAMPER IS INSTALLED WITHIN AN AIR TRANSFER OPENING IN A WALL, A SPOT-TYPE DETECTOR LISTED FOR RELEASING SERVICE SHALL BE INSTALLED WITHIN 5 FEET (1524 MM) HORIZONTALLY OF THE DAMPER.
3. WHERE A COMBINATION FIRE SMOKE DAMPER IS INSTALLED IN A CORRIDOR WALL OR CEILING, THE DAMPER SHALL BE PERMITTED TO BE CONTROLLED BY A SMOKE DETECTION SYSTEM INSTALLED IN THE CORRIDOR.
4. WHERE A TOTAL-COVERAGE SMOKE DETECTOR SYSTEM IS PROVIDED PROVIDEDWITHIN AREAS SERVED BY A HEATING, VENTILATION AND AIR-CONDITIONING (HVAC) SYSTEM, COMBINATION FIRE SMOKE DAMPERS SHALL BE PERMITTED TO BE CONTROLLED BY THE SMOKE DETECTION SYSTEM.
5. UNLESS SPECIFICALLY SHOWN ON THE MECHANICAL PLANS, DUCT SMOKE DETECTORS SHALL NOT BE THE METHOD FOR ACTUATION OF FIRE SMOKE DAMPERS.

SHEET METAL NOTES

1. REFERENCE: SMACNA HVAC DUCT CONSTRUCTION STANDARDS, METAL AND FLEXIBLE, CURRENT EDITION.
2. CLEARANCE: COORDINATE DUCTWORK WITH MISCELLANEOUS OBSTRUCTIONS IN CEILING SPACE.
3. ROUND ELBOWS AND OFFSETS: FULL RADIUS (R/D = 1.5), 5-PIECE SEGMENTED OR STAMPED. REFER TO SMACNA HVACDCS FIG 2-7, 3-3. DO NOT USE ANGLED OFFSET (TYPE 1). MITERED OFFSET (TYPE 2) MAY BE USED UP TO 30 DEGREE OFFSET ANGLE.
4. ROUND TEES AND LATERALS: CONICAL TEE PER SMACNA HVACDCS FIG 3-5; DO NOT USE STRAIGHT TEE; DO NOT USE CONICAL SADDLE TAP FOR EXPOSED DUCTWORK IN FINISHED SPACES. 90-DEGREE TEE WITH OVAL TO ROUND TAP, LATERAL, AND 45-DEGREE RECTANGULAR LEAD-IN PER SMACNA HVACDCS FIG 3-4.
5. RECTANGULAR ELBOWS AND OFFSETS: FULL RADIUS WHERE SPACE PERMITS, R/W = 1.5; OTHERWISE USE SQUARE CORNER ELBOW WITH TURNING VANES.
6. RECTANGULAR DIVIDED FLOW FITTINGS: USE GENERALLY, EXCEPT BRANCHES TO TERMINALS; SMACNA HVACDCS FIG 2-5.
7. TURNING VANES: H.E.P. MANUFACTURER OR APPROVED HIGH EFFICIENCY PROFILE AIRFOIL TYPE FOR RECTANGULAR SQUARE THROAT ELBOWS. ACOUSTICAL TYPE FOR RETURN AIR MITERED ELBOWS.
8. TAKEOFFS TO OPENINGS: CONICAL TYPE WITH VOLUME DAMPER FOR ROUND DUCT BRANCHES PER SMACNA HVACDCS FIG 2-6, MINIMUM INLET DIAMETER 2 INCHES LARGER THAN DUCT SIZE. 45 DEGREE ENTRY FITTING FOR RECTANGULAR DUCT BRANCHES PER SMACNA HVACDCS FIG 2-6.
9. FLEXIBLE CONNECTIONS: PROVIDE AT EACH DUCT CONNECTION TO FANS, PACKAGED HVAC EQUIPMENT, EXTERNALLY ISOLATED AIR HANDLING UNITS, FAN COIL UNITS, AND SIMILAR EQUIPMENT. EXCEPTION: EQUIPMENT IN CORRIDOR CEILING SPACES WHERE FIRE RATING IS REQUIRED.

HVAC NOTES

1. ATTACHMENTS: AIR DISTRIBUTION OUTLETS AND LOUVERS SHALL HAVE ALL REQUIRED ACCESSORIES AND ATTACHMENTS FOR A COMPLETE CONNECTION TO THE SPECIFIC TYPE OF STRUCTURE THAT THEY ARE BEING ATTACHED TO. THIS INCLUDES, BUT IS NOT LIMITED TO, EXTERIOR BRICKS, GWB WALLS, GWB CEILING, ETC.
2. DUCTWORK: DUCTWORK SHALL BE SMOOTH SHEET METAL (CLASS-1). DUCTWORK THROUGH FIRE RATED STRUCTURE AND FLOOR SHALL BE MIN. 26 GA. STEEL. MAXIMUM LENGTH OF FLEXIBLE DUCTS SHALL BE 5'-0", UNLESS OTHERWISE NOTED ON DRAWINGS. DUCTWORK SIZES SHOWN ARE INSIDE CLEAR DIMENSIONS.
3. SEISMIC: PROVIDE SEISMIC RESTRAINTS FOR MECHANICAL EQUIPMENT, PIPING, AND DUCTWORK PER SMACNA AND LOCAL REGULATIONS.
4. FILTER CLEARANCE: PROVIDE ADEQUATE CLEARANCE FOR CHANGING AIR FILTERS.
5. FIRE RATINGS: RATED FLOOR/CEILING JOINT SPACES HAVING DUCTWORK INSIDE THEM SHALL BE FIRE/SMOKE PROTECTED TO MAINTAIN THE 1-HOUR FLOOR/CEILING RATING PER LOCAL JURISDICTIONS. EXHAUST DUCTWORK PENETRATING THE 1-HOUR ROOF/CEILING OR FLOOR/CEILING ASSEMBLY SHALL HAVE ACCESSIBLE CEILING FIRE DAMPERS. ALTERNATIVELY, THE EXHAUST DUCTWORK SHALL BE ROUTED INSIDE A RATED SHAFT TO PROTECT THE CEILING/ROOF RATING PER THE LOCAL JURISDICTIONS.
6. FIRESTOP: PIPE, DUCT AND CONDUIT PENETRATIONS THROUGH RATED ASSEMBLIES SHALL BE FIRE AND SMOKE STOPPED PER CODE.
7. VOLUME DAMPERS: PROVIDE AN ACCESSIBLE MANUAL VOLUME DAMPER FOR EACH SUPPLY, RETURN, OSA AND EXHAUST OPENING, LOCATED AS FAR UPSTREAM AS POSSIBLE FROM THE OPENING. PROVIDE A MANUAL VOLUME DAMPER FOR BRANCH MAINS SERVING MORE THAN ONE OPENING. VOLUME DAMPERS IN NON-ACCESSIBLE CEILING SHALL HAVE A CONTROL ARM EXTENDED TO AN ACCESSIBLE LOCATION. PROVIDE "YOUNG" REGULATOR OR EQUAL. EXACT LOCATION OF CONTROL DEVICES VISIBLE IN FINISHED SPACES SHALL BE COORDINATED WITH THE ARCHITECT. NOTE: DUCTWORK/DIFFUSERS WITHIN THE UNITS MAY BE PROVIDED WITH OBD'S IN LIEU OF BALANCING DAMPERS OUTLINED ABOVE. OBD'S ARE NOT PERMITTED FOR DIFFUSERS LOCATED OUTSIDE THE RESIDENTIAL UNITS EXCEPT FOR THE CORRIDOR SUPPLY GRILLES.
8. TEST AND BALANCE WORK SHALL BE PERFORMED BY AN INDEPENDENT TEST AND BALANCE AGENCY. PROVIDE (3) COPIES OF TEST AND BALANCE REPORT TO OWNER.
9. PROVIDE SEISMIC RESTRAINTS FOR ALL MECHANICAL EQUIPMENT PER CODE AND SMACNA STANDARDS. B

PIPING NOTES

1. DISASSEMBLY PROVISIONS: PROVIDE UNIONS OR FLANGES AT PIPING CONNECTIONS TO EQUIPMENT, COILS, TRAPS, CONTROL VALVES, AND OTHER COMPONENTS TO ALLOW DISASSEMBLY FOR MAINTENANCE.
2. REDUCERS: PROVIDE AS REQUIRED FROM LINE PIPE SIZE TO EQUIPMENT, TRAP, COIL, AND CONTROL VALVE CONNECTION SIZES.
3. OFFSETS: PROVIDE FOR BRANCH LINES TO EQUIPMENT.
4. DIELECTRIC UNIONS: PROVIDE AT CONNECTIONS OF DISSIMILAR PIPE.
5. REFRIGERANT PIPING: PROVIDE SIZING & INSTALLATION IN STRICT ACCORDANCE WITH MANUFACTURER'S INSTRUCTIONS. INSTALL REFRIGERANT PIPING BETWEEN INDOOR AND OUTDOOR UNITS AS AS REQUIRED AND RECOMMENDED BY MANUFACTURER. REFRIGERANT PIPING RUNS OVER 50' SHALL BE INSTALLED PER MANUFACTURER'S LONG RUN SIZING AND INSTALLATION STANDARDS. NOTE: ROUTING NOT SHOWN ON PLANS.

DRAWINGS ARE DIAGRAMMATIC, SHOWING THE GENERAL LOCATION, TYPE, LAYOUT, AND EQUIPMENT REQUIRED. THE DRAWINGS SHALL NOT BE SCALED FOR EXACT MEASUREMENT. REFER TO ARCHITECTURAL DRAWINGS FOR DIMENSIONS. REFER TO MANUFACTURER'S STANDARD INSTALLATION DRAWINGS FOR EQUIPMENT CONNECTIONS AND INSTALLATION REQUIREMENTS. PROVIDE DUCTWORK, CONNECTIONS, ACCESSORIES, OFFSETS, AND MATERIALS NECESSARY FOR A COMPLETE SYSTEM.

PRE-CON MEETING

CONTRACTORS SHALL ATTEND A PRE-CONSTRUCTION MEETING WITH THE ENGINEER FOR THE PURPOSE OF REVIEWING THE WORK PRIOR TO ORDERING ANY EQUIPMENT OR PERFORMING ANY WORK. THE MEETING SHALL BE LOCATED AT THE PROJECT SITE ON A DATE AND TIME TO BE MUTUALLY AGREED. THE MEETING WILL BE A WORKING SESSION. THE MEETING WILL BE FACILITATED BY THE ENGINEER AND THE AGENDA WILL INCLUDE A DETAILED REVIEW OF THE PLANS AND SPECIFICATIONS, CROSS CHECK WITH OTHER TRADES FOR COORDINATION ISSUES, REVIEW OF PROPOSED PRODUCTS, REVIEW OF PLANNED MEANS AND METHODS, AND ON-SITE INVESTIGATION OF FIELD CONDITIONS RELATIVE TO EXISTING CONDITIONS THAT COULD AFFECT THE WORK. PERSONS ATTENDING THE MEETING SHALL BE KNOWLEDGEABLE OF THE PROJECT AND SHALL BE THE SPECIFIC PERSONS INTENDED TO CONTINUE WITH THE PROJECT THROUGH TO COMPLETION. IF REQUIRED, REVISED PLANS WILL BE ISSUED THROUGH OFFICIALCHANNELS. CHANGES IN THE BID PRICE WILL BE DISCUSSED,BUT NO CHANGE ORDERS WILL BE ISSUED UNLESS PROCESSED THOUGH OFFICIAL CHANNELS. IT SHALL BE UNDERSTOOD THAT THE ENGINEER HAS NO AUTHORITY TO ISSUE CHANGE ORDERS.

THE FOLLOWING TRADES SHALL BE REPRESENTED FOR THE MINIMUM TIME INDICATED:

MECHANICAL SHEET METAL	2 HOURS
PLUMBING/PIPING	2 HOURS
ELECTRICAL	2 HOURS
GENERAL CONTRACTOR	ALL SESSIONS

APPLICABLE CODES

THESE DRAWINGS ARE BASED ON THE FOLLOWING CODES:

-2019 CALIFORNIA BUILDING CODE

-2019 CALIFORNIA MECHANICAL CODE

-2019 CALIFORNIA PLUMBING CODE

-2019 CALIFORNIA NON-RESIDENTIAL ENERGY CODE

GARAGE VENTILATION NOTES

1. PARKING GARAGE VENTILATION REQUIREMENTS:

   TOTAL CAPACITY = 0.75 CFM/SF x 21,250 SF = 15,938 CFM MINIMUM
   MINIMUM CONTINUOUS = 0.15 CFM/SF x 21,250 SF = 3,188 CFM MINIMUM

   GEF-1 = 16,000 CFM CAPACITY, FAN SHALL RUN AT 4,000 CFM CONTINUOUSLY. B
2. THE TERMINATION POINT SHALL BE 30 FEET FROM PROPERTY LINES, 10 FEET FROM OPENINGS INTO THE BUILDING, 6 FEET FROM EXTERIOR WALLS OR ROOFS, 10 FEET FROM COMBUSTIBLE WALLS OR OPENINGS INTO THE BUILDING THAT ARE IN THE DIRECTION OF THE EXHAUST DISCHARGE, AND 10 FEET ABOVE GRADE.
3. PARKING GARAGE VENTILATION SYSTEM SHALL BE EQUIPPED WITH CARBON MONOXIDE (CO) SENSOR/CONTROLLERS THROUGHOUT THE GARAGE (MINIMUM 1 SENSOR FOR EVERY 5,000 SF). CO SENSOR/CONTROLLERS SHALL BE EQUIPPED WITH A LOW SETPOINT CONTACTS (SET TO 15 PPM) AND HIGH SETPOINT CONTACTS (SET TO 25 PPM). PARKING GARAGE EXHAUST FANS SHALL BE EQUIPPED WITH VARIABLE FREQUENCY DRIVES. FANS SHALL RUN CONTINUOUSLY AT 25% CAPACITY TO PROVIDE THE CODE REQUIRED CONTINUOUS VENTILATION. WHEN ANY OF THE ASSOCIATED CO SENSOR/CONTROLLERS (PER FLOOR) SENSE LOW SETPOINT CONDITION, THE EXHAUST FAN FOR THAT LEVEL SHALL OPERATE AT 50% SPEED. IF THE CO SENSORS GO INTO HIGH SETPOINT, THE EXHAUST FAN SHALL RAMP UP TO FULL SPEED. REFER TO DETAIL 4 ON SHEET M4.01 FOR ADDITIONAL DETAILS.
4. GARAGE MAKE-UP AIR SHALL BE PROVIDED FROM GARAGE DRIVE ENTRY.
5. GARAGE SHALL BE UNDER NEGATIVE PRESSURE.
6. BEFORE AN OCCUPANCY PERMIT IS GRANTED FOR THE PARKING GARAGE SYSTEM SUBJECT TO SECTION 120.6(c), THE EQUIPMENT AND SYSTEMS SHALL BE CERTIFIED AS MEETING THE ACCEPTANCE REQUIREMENTS FOR CODE COMPLIANCE, AS SPECIFIED BY THE REFERENCE NONRESIDENTIAL APPENDIX NA7.
7. CO SENSORS SHALL BE CERTIFIED BY THE MANUFACTURER TO BE ACCURATE WITHIN PLUS OR MINUS 5 PERCENT OF MEASUREMENTS, FACTORY CALIBRATED, CERTIFIED BY THE MANUFACTURER TO DRIFT NO MORE THAN 5 PERCENT A YEAR, CERTIFIED BY THE MANUFACTURER TO REQUIRE CALIBRATION NO MORE FREQUENTLY THAN ONCE A YEAR AND BE MONITORED BY A CONTROL SYSTEM.

COUNTY OF SANTA CLARA
BUILDING INSPECTION OFFICE
PLANS APPROVED FOR PERMIT
RECORD NO.: DEV22-1242
BY: Warren Krause Date: 7/28/2023
HARD COPY OF THESE STAMPED PLANS MUST BE ON THE SITE FOR INSPECTIONS

DRAWING INDEX

DWG	DESCRIPTION	SD DRAFT SET 04/09/21	100% SD SET 04/30/21	50% DD SET 09/13/21	100% DD SET 08/01/22	50% CD SET 09/30/22	PERMIT SET 11/11/22	BID SET 12/16/22	BID ADDENDUM SET 03/16/23
M0.00	LEGEND, NOTES AND DRAWING INDEX	X	X	X	X	X	X	X	X
M0.01	SCHEDULES & CALCULATIONS			X	X	X	X	X	X
M0.02	SCHEDULES & CALCULATIONS			X	X	X	X	X	X
M2.01	FLOOR PLAN – FIRST FLOOR	X	X	X	X	X	X	X	X
M2.02	FLOOR PLAN – SECOND FLOOR	X	X	X	X	X	X	X	X
M2.03	FLOOR PLAN – THIRD FLOOR	X	X	X	X	X	X	X	X
M2.04	FLOOR PLAN – FORTH FLOOR	X	X	X	X	X	X	X	X
M2.05	FLOOR PLAN – ROOF	X	X	X	X	X	X	X	X
M3.00	ENLARGED UNIT PLANS		X	X	X	X	X	X	X
M3.01	ENLARGED UNIT PLANS		X	X	X	X	X	X	X
M3.02	ENLARGED PLANS				X	X	X	X	X
M3.03	ENLARGED PLANS				X	X	X	X	X
M3.04	ENLARGED PLANS					X	X	X	X
M4.00	DETAILS & DIAGRAMS	X	X	X	X	X	X	X	X
M4.01	DETAILS & DIAGRAMS	X	X	X	X	X	X	X	X

INCLUDED IN SET

COPYRIGHT 2023, EMERALD CITY ENGINEERS, INC.
MLEBLANC J:\2293-007 231 GRANT, PALO ALTO, CA\DWG\M000 COVER SHEET.DWG 03-16-2023 10:17

VAN METER WILLIAMS POLLACK LLP
ARCHITECTURE | URBAN DESIGN ■ SAN FRANCISCO | DENVER | MINNEAPOLIS
333 Bryant Street, Suite 300, San Francisco, CA 94107 T 415.974.5352

CIVIL ENGINEER
BKF - SAN JOSE
1730 N. FIRST ST. STE 600
SAN JOSE, CA 95112

LANDSCAPE ARCHITECT
PLURAL STUDIO
2742 17TH STREET
SAN FRANCISCO, CA 94110

STRUCTURAL ENGINEER
HOHBACH-LEWIN
250 SHERIDAN AVE STE 100
PALO ALTO, CA 94306

MEP ENGINEER
EMERALD CITY ENGINEERS
21705 HIGHWAY 99
LYNWOOD, WA 98036

SUSTAINABILITY/ENERGY
REDWOOD ENERGY
1887 Q STREET
ARCATA, CA 95521

EMERALD CITY ENGINEERS, INC
21705 Highway 99
Lynnwood, WA 98036
TEL: 425-741-1200

REGISTERED PROFESSIONAL ENGINEER MASSAMAGHAN KONI No. 38848 EXP. 03-31-24 MECHANICAL STATE OF CALIFORNIA

03/16/23

ID	DATE	NAME
1	11/11/22	PERMIT SET - CONV
A	12/16/22	BID SET
B	03/20/23	BID ADDENDUM SET
2	03/20/23	PLAN CHECK COMMENT RESPONSES SET

Project:

EDUCATOR HOUSING
231 GRANT AVENUE

231 GRANT AVENUE
PALO ALTO, CA 94306

Client:

mercy HOUSING
abode communities
MERCY HOUSING/
ABODE COMMUNITIES

LEGEND, NOTES AND DRAWING INDEX

JOB #: 2293-007

SCALE:

M0.00

BID ADDENDUM SET | DATE: 03/20/2023

MECHANICAL PIPE INSULATION SCHEDULE

SERVICE	MATERIAL	THICKNESS	FIELD APPLIED JACKET	VAPOR RETARDER REQUIRED	FINISH	NOTES
REFRIGERANT SECTION, LIQUID AND HOT-GAS PIPING (WHERE REQUIRED). OPERATING TEMPERATURE 40-60°F.	FLEXIBLE ELASTOMERIC	½"-1¼" PIPE: ¾" 1½" & LARGER PIPE: 1"	NONE	NO	NONE	
REFRIGERANT SECTION, LIQUID AND HOT-GAS PIPING (WHERE REQUIRED). OPERATING TEMPERATURE BELOW 40°F.	FLEXIBLE ELASTOMERIC	½"-¾" PIPE: 1" 1"& LARGER PIPE: 1½"	NONE	NO	NONE	
ABOVE GROUND INSULATION OUTSIDE THE BUILDING. OPERATING TEMPERATURE 40-60°F.	FLEXIBLE ELASTOMERIC	½"-1¼" PIPE: ¾" 1½" & LARGER PIPE: 1"	NONE	YES	TWO COATS OF MANUFACTURER'S RECOMMENDED UV INHIBITOR	
ABOVE GROUND INSULATION OUTSIDE THE BUILDING. OPERATING TEMPERATURE BELOW 40°F.	FLEXIBLE ELASTOMERIC	½"-¾" PIPE: 1" 1" & LARGER PIPE: 1½"	NONE	YES	TWO COATS OF MANUFACTURER'S RECOMMENDED UV INHIBITOR	

DUCT INSULATION SCHEDULE

SERVICE	MATERIAL	MINIMUM R-VALUE	VAPOR RETARDER REQUIRED	NOTES
SUPPLY AND OUTSIDE AIR DUCTS, CONCEALED, LOW-RISE RESIDENTIAL (I.E. 3-STORIES AND LESS)	MINERAL-FIBER BLANKET	R-4.2	YES	
SUPPLY AND OUTSIDE AIR DUCTS, CONCEALED, NON-RESIDENTIAL AND HIGH-RISE RESIDENTIAL (I.E. 4-STORIES AND MORE)	MINERAL-FIBER BLANKET	R-4.2	YES	
RETURN AIR DUCTS, CONCEALED, LOW-RISE RESIDENTIAL (I.E. 3-STORIES AND LESS)	MINERAL-FIBER BLANKET	R-4.2	YES	
RETURN AIR DUCTS, CONCEALED, NON-RESIDENTIAL AND HIGH-RISE RESIDENTIAL (I.E. 4-STORIES AND MORE)	NONE REQUIRED, UNLESS NOTED OTHERWISE	N/A	N/A	
SUPPLY, RETURN, AND OUTSIDE AIR DUCTS, FULLY EXPOSED WITHIN CONDITIONED SPACES.	NONE REQUIRED, UNLESS NOTED OTHERWISE	N/A	N/A	
SUPPLY AND RETURN AIR DUCTS LOCATED IN UNCONDTIONED SPACES OR OUTDOORS.	CLOSED-CELL PHENOLIC FOAM	R-8.0	NO	FIELD APPLIED FOIL & PAPER JACKET

NOTE: ALL DUCTWORK SHALL BE INSULATED PER THE MINIMUM REQUIREMENTS OF 2019 CALIFORNIA ENERGY CODE.

SPLIT SYSTEM AIR CONDITIONER SCHEDULE – INDOOR UNIT

EQUIP NO.	SERVICE	MOUNTING/ DISCHARGE	FAN	ELECTRICAL			WEIGHT, POUNDS	BASIS OF DESIGN	CONNECTED OUTDOOR UNIT
			AIRFLOW, CFM	VOLTAGE	MCA	MOCP			
IAC-1	ELEVATOR CONTROL ROOM	HORIZONTAL	550	208V/1P	19	20	125	FIRST COMPANY 19HXX-C (1)(2)(3)(5)(6)	OAC-1
IAC-2	ERRCS ROOM	HIGH WALL	550	208V/1P	(4)	(4)	40	CARRIER 40MHHC18 (1)(2)(3)	OAC-2
IAC-3	MPOE ROOM	HIGH WALL	550	208V/1P	(4)	(4)	40	CARRIER 40MHHC18 (1)(2)(3)	OAC-3
IAC-4	ELECTRICAL ROOM	HIGH WALL	550	208V/1P	(4)	(4)	40	CARRIER 40MHHC18 (1)(2)(3)	OAC-4
IAC-5	SERVER ROOM	HIGH WALL	550	208V/1P	(4)	(4)	40	CARRIER 40MHHC18 (1)(2)(3)	OAC-5

NOTES: (1) INSTALL UNITS AS SHOWN AND AS RECOMMENDED BY THE MANUFACTURER IN COMPLIANCE WITH LOCAL CODES.
(2) ROUTING OF REFRIGERANT LINES FROM INDOOR TO OUTDOOR UNITS NOT SHOWN ON PLANS. CONTRACTOR TO FIELD COORDINATE ROUTING.
(3) PROVIDE CONDENSATE PUMP ACCESSORY.
(4) INDOOR UNIT POWERED FROM OUTDOOR UNIT.
(5) PROVIDE SAFETY OVERFLOW SWITCH FOR SECONDARY CONDENSATE DRAINAGE. PRIMARY CONDNESATE DRAINAGE BY PLUMBING CONTRACTOR. REFER TO PLUMBING PLANS FOR ROUTING.
(6) PRIOR TO ORDERING, CONTRACTOR TO COORDINATE WITH ELEVATOR MFR TO ENSURE UNIT CAN ADEQUATELY COOL THE ROOM.

SPLIT SYSTEM AIR CONDITIONER SCHEDULE – OUTDOOR UNIT

EQUIP NO.	SERVICE	NOMINAL CAPACITY, TONS	TOTAL COOLING CAPACITY, BTUH	SEER(EER)	ELECTRICAL			WEIGHT, POUNDS	BASIS OF DESIGN	CONNECTED INDOOR UNIT
					VOLTAGE	MCA	MOCP			
OAC-1	ELEVATOR CONTROL ROOM	1.5	18,000	14.0	208V/1P	11.8	20	175	CARRIER 24AHA418 (1)(2)(3)(4)	IAC-1
OAC-2	ERRCS ROOM	1.5	18,000	19.0	208V/1P	15.0	20	100	CARRIER 38MHRC18AA3 (1)(2)(3)	IAC-2
OAC-3	MPOE ROOM	1.5	18,000	19.0	208V/1P	15.0	20	100	CARRIER 38MHRC18AA3 (1)(2)(3)	IAC-3
OAC-4	ELECTRICAL ROOM	1.5	18,000	19.0	208V/1P	15.0	20	100	CARRIER 38MHRC18AA3 (1)(2)(3)	IAC-4
OAC-5	SERVER ROOM	1.5	18,000	19.0	208V/1P	15.0	20	100	CARRIER 38MHRC18AA3 (1)(2)(3)	IAC-5

NOTES: (1) ARI LISTED WITH ALL STANDARD FEATURES, INSTALLATION ACCESSORIES AND COMPRESSOR SHORT CYCLING PROTECTION. FILTER DRIVER, REFRIGERANT LINE FILTER, LIQUID SOLENOID VALVE, AND SAFETY PRESSURE SWITCHES. INSTALL REFRIGERANT TUBING AND LENGTH IN STRICT ACCORDANCE WITH MANUFACTURER'S RECOMMENDATION.
(2) ROUTING OF REFRIGERANT LINES FROM INDOOR TO OUTDOOR UNITS NOT SHOWN ON PLANS. CONTRACTOR TO FIELD COORDINATE ROUTING.
(3) AIR CONDITIONERS SHALL BE MOUNTED ON SPRING ISOLATORS.
(4) PRIOR TO ORDERING, CONTRACTOR TO COORDINATE WITH ELEVATOR MFR TO ENSURE UNIT CAN ADEQUATELY COOL THE ROOM.

DIFFUSER SCHEDULE

CALLOUT	DESCRIPTION	AIRFLOW RANGE, CFM	FACE SIZE, IN	BASIS OF DESIGN (1)(2)(4)
CD-1	CEILING DIFFUSER	0-800	24x24	TITUS TMS
CD-2	CEILING DIFFUSER	0-200	12x12	TITUS TMS
CD-3	CEILING DIFFUSER	0-200	12x12	TITUS TDC
EG-1	SIDEWALL EXHAUST GRILLE	0-250	12x6	TITUS 350RL
EG-2	CEILING EXHAUST GRILLE	0-500	12x12	TITUS 350ZRL
EG-3	CEILING EXHAUST GRILLE	0-1500	24x24	TITUS 350ZRL
LD-1	LINEAR DIFFUSER – SUPPLY	0-400	48x6	TITUS ML 38
LD-2	LINEAR DIFFUSER – RETURN	0-240	48x6	TITUS MLR 38
RG-1	CEILING RETURN GRILLE	0-2000	24x24	TITUS 350ZRL
RG-2	CEILING RETURN GRILLE	0-500	12x12	TITUS 350ZRL
RG-3	SIDEWALL RETURN GRILLE	0-250	12x6	TITUS 350RL
RG-4	CEILING RETURN GRILLE	0-2000	24x24	TITUS 350FLF2 (5)
SG-1	SUPPLY GRILLE	0-250	12x6	TITUS 300RS (3)
SG-2	SUPPLY GRILLE	0-600	14x14	TITUS 300RS

NOTES: (1) ALL DIFFUSERS, REGISTERS, AND GRILLES SHALL BE FACTORY PRIMED FOR CUSTOM PAINTING BY OTHERS.
(2) PROVIDE SIDEWALL GRILLES WITH OBD'S FOR BALANCING.
(3) PROVIDE SPECIFIED EQUIPMENT OR EQUAL.
(4) DIFFUSERS & GRILLES VISIBLE ABOVE WOOD SLAT OR OPEN CEILINGS SHALL BE PAINTED, COORDINATE COLOR SELECTION WITH ARCHITECT.
(5) PROVIDE WITH 2" MERV 13 FILTER.

THERMOSTATS

THERMOSTATS IN PUBLIC AREAS SHALL BE OCST THERMOSTATS AND HAVE PROGRAMMABLE SET BACK CONTROLS, SETPOINTS FOR AT LEAST FOUR PERIODS WITHIN 24 HOURS. PROVIDE LOCKABLE COVERS.

THERMOSTATS IN RESIDENTIAL UNITS SHALL HAVE PROGRAMMABLE SET BACK CONTROLS, SETPOINTS FOR AT LEAST FOUR PERIODS WITHIN 24 HOURS. THERMOSTATS FURNISHED BY MECHANICAL CONTRACTOR, INSTALLED BY MECHANICAL CONTRACTOR, AND PROGRAMMED BY MECHANICAL CONTRACTOR

MOUNT ALL THERMOSTATS WITH TOP OF THERMOSTAT AT 48"ABOVE FINISHED FLOOR MAXIMUM.

FAN SCHEDULE

EQUIP NO.	SERVICE	MOUNTING/ DISCHARGE	AIRFLOW, CFM	ESP. IN WG	BHP	ELECTRICAL		SOUND DATA	OPERATION	WEIGHT (LBS)	BASIS OF DESIGN (1)
						VOLTAGE	HP				
EF-1	RESIDENTIAL UNIT	CEILING MTD	80	0.25	11 WATTS	120V/1P	FHP	0.5 SONES	(3)	15.0	PANASONIC FV-05-11VKSL2 (6)
EF-2	MAINTENANCE ROOM/STORAGE ROOMS #108 & #109/CORRIDOR	INLINE	775	0.50	182 WATTS	120V/1P	FHP	1.1 SONES	CONTINUOUS	50.0	GREENHECK CSP-A1410 (2)
EF-3	PUBLIC BATHROOM	CEILING MTD	50	0.25	9 WATTS	120V/1P	FHP	0.3 SONES	CONTINUOUS	25.0	GREENHECK SP-A90 (2)(5)
EF-4	NOT USED	–	–	–	–	–	–	–	–	–	–
EF-5	STORAGE ROOMS	INLINE	650	0.50	143 WATTS	120V/1P	1/4	1.0 SONES	CONTINUOUS	50.0	GREENHECK CSP-A700-VG (2)
EF-6	TRASH EXHAUST FAN	UTILITY	700	0.50	0.11 HP	208V/3P	1/4	67 dBA	CONTINUOUS	200.0	GREENHECK USF-13
EF-7	LEVEL 1 CORRIDOR EXHAUST FAN	CEILING MTD	125	0.25	81 WATTS	120V/1P	1/4	0.4 SONES	CONTINUOUS	50.0	GREENHECK SP-A290 (2)(5)
EF-8	LAUNDRY/TRASH CHUTE/WATER HEATER ROOM	CABINET INLINE	400	0.50	318 WATTS	120V/1P	1/2	0.7 SONES	CONTINUOUS	75.0	GREENHECK CSP-A900 (2)(5)
EF-9	JANITORS CLOSET	CEILING MTD	50	0.25	9 WATTS	120V/1P	FHP	0.3 SONES	CONTINUOUS	25.0	GREENHECK SP-A90 (2)(5)
EF-10	PROPERTY MANAGEMENT	CEILING MTD	50	0.25	12 WATTS	120V/1P	FHP	<0.3 SONES	MANUAL	25.0	GREENHECK SP-A70 (2)
EF-11	FIRE PUMP ROOM	CABINET INLINE	3,500	0.50	0.88 HP	208V/3P	2	80 dBA	(7)	200.0	GREENHECK SQ-160-VG (2)
SF-1	RESIDENTIAL UNIT	INLINE	(4)	0.40	10.8 WATTS	120V/1P	FHP	0.65 SONES	(10)	30.0	BROAN FIN-180B-HW (11)(14)
SF-2	MAINTENANCE ROOM/STORAGE ROOMS #108 & #109	INLINE	650	0.50	0.19 HP	120V/1P	1/3	1.4 SONES	CONTINUOUS	75.0	GREENHECK CSP-A700-VG (2)(8)
SF-3	COMMUNITY ROOM SUPPLY FAN	INLINE	500	0.75	138 WATTS	120V/1P	1/4	2.0 SONES	CONTINUOUS	75.0	GREENHECK CSP-A700-VG (2)(8)
SF-4	SERVICES SUPPLY FAN	INLINE	150	0.75	77 WATTS	120V/1P	1/8	2.0 SONES	CONTINUOUS	75.0	GREENHECK CSP-A700-VG (2)(8)
SF-5	PROPERTY MANAGEMENT SUPPLY FAN	INLINE	50	0.40	29 WATTS	120V/1P	FHP	0.3 SONES	CONTINUOUS	30.0	PANASONIC FV-15NLFS1 (11)
SF-6	BIKE ROOM & STORAGE SUPPLY FAN	INLINE	650	0.50	0.19 HP	120V/1P	1/3	1.4 SONES	CONTINUOUS	75.0	GREENHECK CSP-A700-VG (2)(8)
SF-7	LOBBY SUPPLY FAN	INLINE	900	0.50	0.13 HP	120V/1P	1/2	1.2 SONES	CONTINUOUS	75.0	GREENHECK CSP-A1410 (2)(8)
SF-8	OFFICE SUPPLY FAN	INLINE	50	0.40	29 WATTS	120V/1P	FHP	0.3 SONES	CONTINUOUS	30.0	PANASONIC FV-15NLFS1 (11)
SF-9	MEETING ROOM SUPPLY FAN	INLINE	50	0.40	29 WATTS	120V/1P	FHP	0.3 SONES	CONTINUOUS	30.0	PANASONIC FV-15NLFS1 (11)
SF-10	CORRIDOR SUPPLY FAN	UTILITY	900	1.00	0.27 HP	208V/3P	1/3	73 dBA	CONTINUOUS	150.0	GREENHECK USF-10 (5)(8)
SF-11	ELEVATOR LOBBY	INLINE	150	0.75	58 WATTS	120V/1P	1/8	0.6 SONES	CONTINUOUS	75.0	GREENHECK CSP-A510-VG (2)(5)(8)
SF-12	LOBBY SUPPLY FAN	INLINE	900	0.50	0.13 HP	120V/1P	1/2	1.2 SONES	CONTINUOUS	75.0	GREENHECK CSP-A1410 (2)(8)
GEF-1	GARAGE EXHAUST	INLINE	16,000	0.75	4.02 HP	208V/3P	5	82 dBA	(12)	700	GREENHECK TBI-FS-5L36-50 (13)(15)
GTF-1	GARAGE TRANSFER FAN	INLINE	5,000	0.25	0.76 HP	208V/3P	2	17.2 SONES	(12)	150	GREENHECK SQ-16-VG (15)

NOTES:
(1) PROVIDE BACKDRAFT DAMPERS ON EXHAUST FANS.
(2) PROVIDE SPEED CONTROLLER.
(3) FAN SHALL OPERATE AT 2-SPEED WITH CONTINUOUS LOW SETTING. HIGH SPEED ACTIVATED BY EITHER MOTION SENSOR OR CONDENSATION SENSOR. SET LOW SPEED TO 30 CFM.
(4) REFER TO VENTILATION CALCS OF SHEET M0.02 FOR MINIMUM AIRFLOW SETTING.
(5) MULTIPLE FANS ARE INDENTIFIED WITH A LETTER SUFFIX (EF-4A, EF-4B, ETC.). THERE MAY BE GAPS IN THE SEQUENCE. REFER TO PLANS FOR QUANTITIES.
(6) FAN IS PROVIDED BY ELECTRICAL CONTRACTOR, REFER TO ELECTRICAL PLANS.
(7) INTERLOCK WITH THERMOSTAT IN ROOM. FAN SHALL ACTIVATE WHEN ROOM EXCEEDS 80 DEGREES F.
(8) PROVIDE WITH MERV 13 FILTER.
(9) PROVIDE MANUAL SWITCH.
(10) SUPPLY FAN TO RUN CONTINUOUSLY WITH MANUAL SWITCH FOR SHUTOFF PER ASHRAE 62.2,4.4
(11) PROVDE MERV 13 FILTER – BROAN FIN-MERV13.
(12) REFER TO GARAGE NOTES ON M0.00 AND DETAIL 4 ON M4.01 FOR MORE INFORMATION.
(13) PROVIDE VFD
(14) PROVIDE PERMANENT PLAQUE THAT READ "THIS SWITCH CONTROLS THE INDOOR AIR QUALITY VENTILATION FOR THE APARTMENT UNIT, LEAVE IT ON UNLESS THE OUTDOOR AIR QUALITY IS VERY POOR".
(15) PROVIDE CEILING HUNG MOUNTING RAILS, INLET BELL, AND GAURDS.
(16) INTERLOCK WITH FCU-6 OPERATION.

THROUGH-WALL HEAT PUMP SCHEDULE

EQUIP NO.	SERVICE	SUPPLY	COOLING		HEATING			ELECTRICAL			BASIS OF DESIGN
		AIRFLOW, CFM	BTUH	EER	BTUH	COP	ELEC HEATER, KW	VOLTAGE	MCA	MOCP	
HPAC-1	RESIDENTIAL UNITS	290	8,000	10.96	7,900	3.3	1.8	208V/1P	14	20	AIO AWK10N4H2 (1)(2)(3)(4)
HPAC-2	RESIDENTIAL UNITS	290	8,000	10.96	7,900	3.3	0.9	208V/1P	10	15	AIO AWE10N4H2 (1)(2)(3)(4)

NOTES: (1) PROVIDE HARD-WIRED REMOTE WALL MOUNTED THERMOSTAT.
(2) PROVIDE NECESSARY PARTS FOR EXTERIOR CONDENSATE DRAIN.
(3) PROVIDE WITH A HARDWIRE POWER CONNECTION.
(4) PROVIDE STANDARD THERMOSTAT GATEWAY (TPG) FOR CONNECTION TO HARD-WIRED REMOTE WALL THERMOSTAT.

SPLIT SYSTEM HEAT PUMP SCHEDULE – INDOOR UNIT

EQUIP NO.	SERVICE	MOUNTING/ DISCHARGE	FAN				AUX. HEAT, KW (208V)	ELECTRICAL			SOUND DATA	BASIS OF DESIGN (1)	OUTDOOR UNIT
			AIRFLOW, CFM	MIN. OSA CFM	ESP. IN WG	MOTOR HP (W)		VOLTAGE	MCA	MOCP			
FCU-1	COMMUNITY ROOM	HORIZONTAL	1,600	500	0.50	3/4	10	208V/1P	52.8	60	69.0 dBA	CARRIER FX4DNF049 (2)(3)(6)	HP-1
FCU-2	SERVICES	CEILING CASSETTE	335	150	–	50 W	–	208V/1P	(4)	(4)	34.0 dBA	MITSUBISHI SLZ-KF12NA (2)(3)(5)	HP-2
FCU-3	PROPERTY MANAGEMENT	HORIZONTAL	550	100	0.40	1/2	7.5	208V/1P	51	60	–	FIRST COMPANY 20HXX-C (2)(3)(6)	HP-3
FCU-4	MEETING ROOM	CEILING CASSETTE	335	50	–	50 W	–	208V/1P	(4)	(4)	31.0 dBA	MITSUBISHI SLZ-KF09NA (2)(3)(5)	HP-4
FCU-5	NOT USED	–	–	–	–	–	–	–	–	–	–	–	HP-5
FCU-6	NOT USED	–	–	–	–	–	–	–	–	–	–	–	HP-6
FCU-7	LOBBY	HORIZONTAL	900	300	0.40	1/2	6	208V/1P	42	50	–	FIRST COMPANY 32HXX-C (2)(3)(6)	HP-7
FCU-8	LOBBY	HORIZONTAL	900	300	0.40	1/2	6	208V/1P	42	50	–	FIRST COMPANY 32HXX-C (2)(3)(6)	HP-8

NOTES: (1) REFRIGERANT SHALL BE R-410A.
(2) PROVIDE SAFETY OVERFLOW SWITCH FOR SECONDARY CONDENSATE DRAINAGE. PRIMARY CONDNESATE DRAINAGE BY PLUMBING CONTRACTOR. REFER TO PLUMBING PLANS FOR ROUTING.
(3) PROVIDE NON-LOUVERED ACCESS PANEL.
(4) INDOOR UNIT POWERED BY OUTDOOR UNIT.
(5) PROVIDE WITH CONDENSATE PUMP ACCESSORY – MITSUBISHI MODEL X87-721.
(6) PROVIDE WITH CONDENSATE PUMP FOR PRIMARY CONDENSATE DRAINAGE.

SPLIT SYSTEM HEAT PUMP SCHEDULE – OUTDOOR UNIT

EQUIP NO.	SERVICE	CAPACITY, TONS	TOTAL COOLING CAPACITY, BTUH	SEER	TOTAL HEATING CAPACITY, BTUH	HSPF	ELECTRICAL			WEIGHT, LBS	SOUND DATA	BASIS OF DESIGN	CONNECTED FAN COIL UNIT
							VOLTAGE	MCA	MOCP				
HP-1	COMMUNITY ROOM	4.0	46,500	14.0	46,000	8.2	208V/1P	28.8	50	300	73.0 dBA	CARRIER 25HHA448A*030 (1)(2)(3)(4)	FCU-1
HP-2	SERVICES	1.0	12,000	22.0	12,000	11.4	208V/1P	9.0	16	125	51.0 dBA	MITSUBISHI SUZ-KA12NA2 (1)(2)(3)(4)	FCU-2
HP-3	PROPERTY MANAGEMENT	1.5	17,200	11.5	16,300	8.2	208V/1P	11.8	20	200	70.0 dBA	CARRIER 25HHA418A*030* (1)(2)(3)(4)	FCU-3
HP-4	MEETING ROOM	0.75	9,000	22.4	9,000	12.2	208V/1P	9.0	15	125	50.0 dBA	MITSUBISHI SUZ-KA09NA2 (1)(2)(3)(4)	FCU-4
HP-5	NOT USED	–	–	–	–	–	–	–	–	–	–	–	FCU-5
HP-6	NOT USED	–	–	–	–	–	–	–	–	–	–	–	FCU-6
HP-7	LOBBY	2.0	23,200	14.0	21,800	8.2	208V/1P	16.5	25	225	69.0 dBA	CARRIER 25HHA424A*030 (1)(2)(3)(4)	FCU-7
HP-8	LOBBY	2.0	23,200	14.0	21,800	8.2	208V/1P	16.5	25	225	69.0 dBA	CARRIER 25HHA424A*030 (1)(2)(3)(4)	FCU-8

(1) ARI LISTED WITH ALL STANDARD FEATURES, INSTALLATION ACCESSORIES AND COMPRESSOR SHORT CYCLING PROTECTION. FILTER DRIVER, REFRIGERANT LINE FILTER, LIQUID SOLENOID VALVE, AND SAFETY PRESSURE SWITCHES. INSTALL REFRIGERANT TUBING AND LENGTH IN STRICT ACCORDANCE WITH MANUFACTURER'S RECOMMENDATION.
(2) PROVIDE ALL REQUIRED ACCESSORIES FOR LONG-LINE APPLICATIONS.
(3) ROUTING OF REFRIGERANT LINES FROM INDOOR TO OUTDOOR UNITS NOT SHOWN ON PLANS. CONTRACTOR TO FIELD COORDINATE ROUTING. ALL REFRIGERANT PIPES ARE TO BE ACOUSTICALLY ISOLATED (AND ATTACHED TO THE UNIT VIA A FLEXIBLE CONNECTION).
(4) REFRIGERANT SHALL BE R-410A.

COUNTY OF SANTA CLARA
BUILDING INSPECTION OFFICE
PLANS APPROVED FOR PERMIT
RECORD NO.: DEV22-1242
BY: Warren Krause Date: 7/28/2023
HARD COPY OF THESE STAMPED PLANS MUST BE ON THE SITE FOR INSPECTIONS

COPYRIGHT 2023, EMERALD CITY ENGINEERS, INC.
MLEBLANC J:\2293-007 231 GRANT, PALO ALTO, CA\DWG\M001 SCHEDULES & CALCULATIONS.DWG 03-16-2023 10:17

VAN METER WILLIAMS POLLACK LLP
ARCHITECTURE | URBAN DESIGN ■ SAN FRANCISCO | DENVER | MINNEAPOLIS
333 Bryant Street, Suite 300, San Francisco, CA 94107 T 415.974.5352

CIVIL ENGINEER
BKF - SAN JOSE
1730 N. FIRST ST. STE 600
SAN JOSE, CA 95112

LANDSCAPE ARCHITECT
PLURAL STUDIO
2742 17TH STREET
SAN FRANCISCO, CA 94110

STRUCTURAL ENGINEER
HOHBACH-LEWIN
250 SHERIDAN AVE STE 100
PALO ALTO, CA 94306

MEP ENGINEER
EMERALD CITY ENGINEERS
21705 HIGHWAY 99
LYNWOOD, WA 98036

SUSTAINABILITY/ENERGY
REDWOOD ENERGY
1887 Q STREET
ARCATA, CA 95521

EMERALD CITY ENGINEERS, INC
21705 Highway 99
Lynnwood, WA 98036
TEL: 425-741-1200

REGISTERED PROFESSIONAL ENGINEER — MECHANICAL — STATE OF CALIFORNIA — EXP. 03-31-24
03/16/23

ID	DATE	NAME
1	11/11/22	PERMIT SET - CONV
A	12/16/22	BID SET
B	03/20/23	BID ADDENDUM SET
2	03/20/23	PLAN CHECK COMMENT RESPONSES SET

Project:

EDUCATOR HOUSING
231 GRANT AVENUE

231 GRANT AVENUE
PALO ALTO, CA 94306

Client:
mercy HOUSING
abode communities
MERCY HOUSING/
ABODE COMMUNITIES

SCHEDULES & CALCULATIONS

JOB #: 2293-007
SCALE:

M0.01

BID ADDENDUM SET | DATE: 03/20/2023

VOLUME DAMPER NOTE:

PROVIDE AN ACCESSIBLE MANUAL VOLUME DAMPER FOR EACH SUPPLY, RETURN, OSA AND EXHAUST OPENING, LOCATED AS FAR UPSTREAM AS POSSIBLE FROM THE OPENING. PROVIDE A MANUAL VOLUME DAMPER FOR BRANCH MAINS SERVING MORE THAN ONE OPENING. VOLUME DAMPERS IN NON-ACCESSIBLE CEILING SHALL HAVE A CONTROL ARM EXTENDED TO AN ACCESSIBLE LOCATION. PROVIDE "YOUNG" REGULATOR OR EQUAL. EXACT LOCATION OF CONTROL DEVICES VISIBLE IN FINISHED SPACES SHALL BE COORDINATED WITH THE ARCHITECT.
NOTE: DIFFUSERS WITHIN THE UNITS SHALL BE PROVIDED WITH OBD'S FOR BALANCING. VOLUME DAMPERS SHALL BE PROVIDED AT BEDROOM SUPPLY DUCTS PER ACOUSTICAL RECOMMENDATIONS.

FIRE/SMOKE DAMPER SCHEDULE

FIRE/SMOKE DAMPER SCHEDULE

EQUIP NO.	SLEEVE LENGTH	LEAKAGE RATING	DUCT SIZE (2)	DAMPER ORIENTATION	DAMPER RATING, HR	CLOSURE TEMP	DAMPER BLADE TYPE	DAMPER ACTUATOR TYPE	BASIS OF DESIGN
FSD-1	16"	CLASS 1	12ø	HORIZONTAL	1.5	165 F	3V BLADE	ELECTRICAL(1)	GREENHECK FSD 211
FSD-2	16"	CLASS 1	12x12	HORIZONTAL	1.5	165 F	3V BLADE	ELECTRICAL(1)	GREENHECK FSD 211
FSD-3	16"	CLASS 1	14x12	HORIZONTAL	1.5	165 F	3V BLADE	ELECTRICAL(1)	GREENHECK FSD 211
FSD-4	16"	CLASS 1	18x18	HORIZONTAL	1.5	165 F	3V BLADE	ELECTRICAL(1)	GREENHECK OFSD 211
FSD-5	16"	CLASS 1	8ø	HORIZONTAL	1.5	165 F	3V BLADE	ELECTRICAL(1)	GREENHECK FSD 211
FSD-6	16"	CLASS 1	16x8	HORIZONTAL	1.5	165 F	3V BLADE	ELECTRICAL(1)	GREENHECK FSD 211
FSD-7	16"	CLASS 1	18x8	VERTICAL	3.0	165 F	3V BLADE	ELECTRICAL (1)	GREENHECK FSD 231
FSD-8	16"	CLASS 1	42x12	HORIZONTAL	1.5	165 F	3V BLADE	ELECTRICAL(1)	GREENHECK OFSD 211
FSD-9	16"	CLASS 1	8ø	HORIZONTAL	1.5	165 F	3V BLADE	ELECTRICAL(1)	GREENHECK FSD 211
FSD-10	16"	CLASS 1	10ø	HORIZONTAL	1.5	165 F	3V BLADE	ELECTRICAL(1)	GREENHECK FSD 211
FSD-11	16"	CLASS 1	12x12	HORIZONTAL	1.5	165 F	3V BLADE	ELECTRICAL(1)	GREENHECK FSD 211
FSD-12	16"	CLASS 1	24x12	HORIZONTAL	1.5	165 F	3V BLADE	ELECTRICAL(1)	GREENHECK OFSD 211
FSD-13	16"	CLASS 1	8ø	HORIZONTAL	1.5	165 F	3V BLADE	ELECTRICAL(1)	GREENHECK FSD 211
FSD-14	16"	CLASS 1	10ø	HORIZONTAL	1.5	165 F	3V BLADE	ELECTRICAL(1)	GREENHECK FSD 211
FSD-15	16"	CLASS 1	6ø	HORIZONTAL	1.5	165 F	3V BLADE	ELECTRICAL(1)	GREENHECK FSD 211
FSD-16	16"	CLASS 1	8ø	HORIZONTAL	1.5	165 F	3V BLADE	ELECTRICAL(1)	GREENHECK FSD 211
FSD-17	16"	CLASS 1	40x36	HORIZONTAL	1.5	165 F	3V BLADE	ELECTRICAL(1)	GREENHECK FSD 211
FSD-18	16"	CLASS 1	42x34	VERTICAL	3.0	165 F	3V BLADE	ELECTRICAL(1)	GREENHECK FSD 231
FSD-19	16"	CLASS 1	8ø	HORIZONTAL	1.5	165 F	3V BLADE	ELECTRICAL(1)	GREENHECK FSD 211
FSD-20	16"	CLASS 1	8ø	HORIZONTAL	1.5	165 F	3V BLADE	ELECTRICAL(1)	GREENHECK FSD 211
FSD-21	16"	CLASS 1	8ø	HORIZONTAL	1.5	165 F	3V BLADE	ELECTRICAL(1)	GREENHECK FSD 211
FSD-22	16"	CLASS 1	6x6	HORIZONTAL	1.5	165 F	3V BLADE	ELECTRICAL(1)	GREENHECK FSD 211
FSD-23	16"	CLASS 1	12x12	HORIZONTAL	1.5	165 F	3V BLADE	ELECTRICAL(1)	GREENHECK OFSD 211
FSD-24	16"	CLASS 1	12x12	HORIZONTAL	1.5	165 F	3V BLADE	ELECTRICAL(1)	GREENHECK OFSD 211
FSD-25	16"	CLASS 1	6ø	HORIZONTAL	1.5	165 F	3V BLADE	ELECTRICAL(1)	GREENHECK FSD 211
FSD-26	16"	CLASS 1	6ø	HORIZONTAL	1.5	165 F	3V BLADE	ELECTRICAL(1)	GREENHECK FSD 211
FSD-27	16"	CLASS 1	8ø	HORIZONTAL	1.5	165 F	3V BLADE	ELECTRICAL(1)	GREENHECK FSD 211
FSD-28	16"	CLASS 1	14x14	HORIZONTAL	1.5	165 F	3V BLADE	ELECTRICAL(1)	GREENHECK OFSD 211
FSD-29	16"	CLASS 1	14x14	HORIZONTAL	1.5	165 F	3V BLADE	ELECTRICAL(1)	GREENHECK OFSD 211
FSD-30	16"	CLASS 1	14x14	HORIZONTAL	1.5	165 F	3V BLADE	ELECTRICAL(1)	GREENHECK OFSD 211
FSD-31	16"	CLASS 1	14x14	HORIZONTAL	1.5	165 F	3V BLADE	ELECTRICAL(1)	GREENHECK OFSD 211
FSD-32	16"	CLASS 1	6ø	HORIZONTAL	1.5	165 F	3V BLADE	ELECTRICAL(1)	GREENHECK FSD 211
FSD-33	16"	CLASS 1	14x14	HORIZONTAL	1.5	165 F	3V BLADE	ELECTRICAL(1)	GREENHECK OFSD 211
FSD-34	16"	CLASS 1	14x14	HORIZONTAL	1.5	165 F	3V BLADE	ELECTRICAL(1)	GREENHECK OFSD 211
FSD-35	16"	CLASS 1	14x14	HORIZONTAL	1.5	165 F	3V BLADE	ELECTRICAL(1)	GREENHECK OFSD 211
FSD-36	16"	CLASS 1	14x14	HORIZONTAL	1.5	165 F	3V BLADE	ELECTRICAL(1)	GREENHECK OFSD 211
FSD-37	16"	CLASS 1	6ø	HORIZONTAL	1.5	165 F	3V BLADE	ELECTRICAL(1)	GREENHECK FSD 211
FSD-38	16"	CLASS 1	14x14	HORIZONTAL	1.5	165 F	3V BLADE	ELECTRICAL(1)	GREENHECK OFSD 211
FSD-39	16"	CLASS 1	14x14	HORIZONTAL	1.5	165 F	3V BLADE	ELECTRICAL(1)	GREENHECK OFSD 211
FSD-40	16"	CLASS 1	14x14	HORIZONTAL	1.5	165 F	3V BLADE	ELECTRICAL(1)	GREENHECK OFSD 211
FSD-41	16"	CLASS 1	14x14	HORIZONTAL	1.5	165 F	3V BLADE	ELECTRICAL(1)	GREENHECK OFSD 211
FSD-42	16"	CLASS 1	6ø	HORIZONTAL	1.5	165 F	3V BLADE	ELECTRICAL(1)	GREENHECK FSD 211
FSD-43	16"	CLASS 1	8ø	HORIZONTAL	1.5	165 F	3V BLADE	ELECTRICAL(1)	GREENHECK FSD 211
FSD-44	16"	CLASS 1	8ø	HORIZONTAL	1.5	165 F	3V BLADE	ELECTRICAL(1)	GREENHECK FSD 211
FSD-45	16"	CLASS 1	12x6	HORIZONTAL	1.5	165 F	3V BLADE	ELECTRICAL(1)	GREENHECK FSD 211
FSD-46	16"	CLASS 1	12x6	HORIZONTAL	1.5	165 F	3V BLADE	ELECTRICAL(1)	GREENHECK FSD 211
FSD-47	16"	CLASS 1	8ø	HORIZONTAL	1.5	165 F	3V BLADE	ELECTRICAL(1)	GREENHECK FSD 211
FSD-48	16"	CLASS 1	8ø	HORIZONTAL	1.5	165 F	3V BLADE	ELECTRICAL(1)	GREENHECK FSD 211
FSD-49	16"	CLASS 1	12x6	HORIZONTAL	1.5	165 F	3V BLADE	ELECTRICAL(1)	GREENHECK FSD 211
FSD-50	16"	CLASS 1	12x6	HORIZONTAL	1.5	165 F	3V BLADE	ELECTRICAL(1)	GREENHECK FSD 211
FSD-51	16"	CLASS 1	8ø	HORIZONTAL	1.5	165 F	3V BLADE	ELECTRICAL(1)	GREENHECK FSD 211
FSD-52	16"	CLASS 1	8ø	HORIZONTAL	1.5	165 F	3V BLADE	ELECTRICAL(1)	GREENHECK FSD 211
FSD-53	16"	CLASS 1	12x6	HORIZONTAL	1.5	165 F	3V BLADE	ELECTRICAL(1)	GREENHECK FSD 211
FSD-54	16"	CLASS 1	12x6	HORIZONTAL	1.5	165 F	3V BLADE	ELECTRICAL(1)	GREENHECK FSD 211
FSD-55	16"	CLASS 1	12x12	HORIZONTAL	1.5	165 F	3V BLADE	ELECTRICAL(1)	GREENHECK FSD 211
FSD-56	16"	CLASS 1	12x12	HORIZONTAL	1.5	165 F	3V BLADE	ELECTRICAL(1)	GREENHECK FSD 211
FSD-57	16"	CLASS 1	8ø	HORIZONTAL	1.5	165 F	3V BLADE	ELECTRICAL(1)	GREENHECK FSD 211

NOTES: (1) PROVIDE 120V/1P POWER
(2) PROVIDE TRANSITIONS AS REQUIRED TO CONNECT SPECIFIED DUCT SIZE TO DAMPER ASSEMBLY.

FIRE/SMOKE DAMPER SCHEDULE REVISED B

FIRE/SMOKE DAMPER NOTES

FIRE DAMPERS AND FIRE SMOKE DAMPERS SHALL COMPLY WITH THE FOLLOWING:

A. ALL FIRE DAMPERS ARE TO BE INSTALLED IN ACCORDANCE WITH MFR'S LISTING AND INSTALLATION INSTRUCTIONS.

B. FIRE AND SMOKE DAMPERS SHALL BE LISTED AND BEAR THE LABEL OF AN APPROVED TESTING AGENCY INDICATING COMPLIANCE WITH THE STANDARDS IN THIS SECTION. FIRE DAMPERS SHALL COMPLY WITH THE REQUIREMENTS OF UL 555. ONLY FIRE DAMPERS LABELED FOR USE IN DYNAMIC SYSTEMS SHALL BE INSTALLED IN HEATING, VENTILATION AND AIR-CONDITIONING SYSTEMS DESIGNED TO OPERATE FANS DURING A FIRE. SMOKE DAMPERS SHALL COMPLY WITH THE REQUIREMENTS OF UL 555S. COMBINATION FIRE SMOKE DAMPERS SHALL COMPLY WITH BOTH UL 555 AND UL 555S. CEILING RADIATION DAMPERS SHALL COMPLY WITH THE REQUIREMENTS OF UL 555C.

C. FIRE DAMPERS SHALL HAVE MINIMUM DAMPER RATING OF 1.5 HOURS WHEN INSTALLED IN LESS THAN 3-HOUR RATED ASSEMBLIES. RATINGS FOR DAMPERS INSTALLED IN WALLS RATED AT 3 HORS OR MORE SHALL HAVE A MINIMUM FIRE RATING OF 3 HOURS.

D. FIRE AND SMOKE DAMPERS SHALL BE PROVIDED WITH AN APPROVED MEANS OF ACCESS WHICH IS LARGE ENOUGH TO PERMIT INSPECTION AND MAINTENANCE OF THE DAMPER AND ITS OPERATING PARTS. THE ACCESS OPENING SHALL NOT REDUCE THE FIRE RESISTANCE RATING OF THE ASSEMBLY. FIRE AND SMOKE DAMPER ACCESS POINTS SHALL BE PERMANENTLY IDENTIFIED ON THE EXTERIOR HAVING LETTERS NOT LESS THAN 1/2" HIGH READING "FIRE DAMPER" OR "FIRE/SMOKE DAMPER".

E. ALL DAMPERS MUST HAVE END SWITCHES FOR FIRE LIFE SAFETY.

UNLESS SPECIFICALLY SHOWN ON THE MECHANICAL PLANS, DUCT SMOKE DETECTORS SHALL NOT BE THE METHOD FOR ACTUATION OF FIRE SMOKE DAMPERS.

FIRE ALARM CONTRACTOR SHALL PROVIDE ACTUATION DEVICE FOR COMBINATION FIRE SMOKE DAMPERS PER SECTION 717.3.3.1 OF THE BUILDING CODE:

1. WHERE A SMOKE DAMPER IS INSTALLED ABOVE SMOKE BARRIER DOORS IN A SMOKE BARRIER, A SPOT-TYPE DETECTOR LISTED FOR RELEASING SERVICE SHALL BE INSTALLED ON EITHER SIDE OF THE SMOKE BARRIER DOOR OPENING.
2. WHERE A COMBINATION FIRE SMOKE DAMPER IS INSTALLED WITHIN AN AIR TRANSFER OPENING IN A WALL, A SPOT-TYPE DETECTOR LISTED FOR RELEASING SERVICE SHALL BE INSTALLED WITHIN 5 FEET (1524 MM) HORIZONTALLY OF THE DAMPER.
3. WHERE A COMBINATION FIRE SMOKE DAMPER IS INSTALLED IN A CORRIDOR WALL OR CEILING, THE DAMPER SHALL BE PERMITTED TO BE CONTROLLED BY A SMOKE DETECTION SYSTEM INSTALLED IN THE CORRIDOR.
4. WHERE A SMOKE DETECTION SYSTEM IS INSTALLED IN ALL AREAS SERVED BY THE DUCT IN WHICH THE DAMPER WILL BE LOCATED, THE SMOKE DAMPERS SHALL BE PERMITTED TO BE CONTROLLED BY THE SMOKE DETECTION SYSTEM.

FIRE AND SMOKE DAMPERS ACTUATION NOTES:

1. LOCATION OF SMOKE DETECTOR: WITHIN 5 FEET HORIZONTALLY FROM DAMPER. SEE FIRE ALARM DEFERRED SUBMITTAL.
2. SMOKE CONTROL NARRATIVE: SEE FIRE ALARM DEFERRED SUBMITTAL.
3. SEQUENCE OF OPERATION:
   A. DAMPER NORMALLY CLOSED, HELD OPEN BY POWER.
   B. IF SMOKE OR EXCESS HEAT IS DETECTED IN THE AIR DUCT, DAMPER SHALL CLOSE AND RTU/FAN SHALL SHUT DOWN.
   C. IF POWER IS INTERRUPTED, DAMPER SHALL FAIL CLOSED.
4. DETECTOR BY OTHERS. SEE FIRE ALARM DEFERRED SUBMITTAL.
5. OPERATING TEMPERATURE OF ACTUATOR SHALL BE 165 DEGREES F.
6. OVERRIDE SWITCH: SWITCH TO BE LOCATED NEXT TO THE FIRE CONTROL PANEL NEXT TO THE ENTRANCE OF THE LOBBY.
7. DAMPER ACTUATOR SHALL BE INTERLOCKED WITH RTU/FAN TO SHUT DOWN ASSOCIATED UNIT WHEN DAMPER IS CLOSED.
8. DAMPER SHALL BE NORMALLY CLOSED, AND SHALL FAIL CLOSED WHEN POWER IS CUT.

UNIT VENTILATION CALCULATIONS

Emerald City Engineers, Inc. — **Project Name:** 231 Grant
21705 Highway 99 — **Project Number:** 2293-007
Lynnwood, WA 98036 — **Edited By:** ML

Per 2019 CMC 402.1: "Ventilation air requirements for occupancies regulated by the California Energy Commission are found in the California Energy Code."

Per 2019 CEnC 120.1(b)2: "All dwelling units shall meet the requirements of ASHRAE Standard 62.2".

Per 2019 CEnC 150.0(o): "All dwelling units shall meet the requirements of ASHRAE Standard 62.2".

Per ASHRAE 62.2, Total ventilation rate (cfm) = 0.03 cfm/sf x floor area + 7.5 cfm x (number of bedrooms +1)
Note: Number of bedrooms shall not be less than 1. Studio and 1-Bedroom units both have 1 bedroom.

Unit Type	Floor Area	Number of Bedrooms	Ventilation Required (CFM)	Ventilation Provided (CFM)
STUDIO MODULAR	365	1	**26**	**30**
1 BEDROOM MODULAR	527	1	**31**	**40**
2 BEDROOM MODULAR	812	2	**47**	**50**
1 BEDROOM SITE	560	1	**32**	**40**
2 BEDROOM SITE	790	2	**46**	**50**

PUBLIC SPACE VENTILATION CALCULATIONS

Emerald City Engineers, Inc. — **Project Name:** 231 GRANT
21705 Highway 99 — **Project Number:** 2293-007
Lynnwood, WA 98036 — **Edited By:** ML

	2019 CMC Table 402.1							2019 CEnC Table 120.1-A					
Space	**Rp**	**Ra**	**People per 1000 sf**	**Floor Area (sf)**	**People**	**Ez**	**Ventilation Required (CFM)**	**CFM / Person**	**Ventilation Required (CFM)**	**CFM / SF**	**Ventilation Required (CFM)**	**Greatest Ventilation Required (CFM)**	**Ventilation Provided (CFM)**
COMMUNITY ROOM	7.5	0.06	30	1000	30	0.8	356	15	450	0.50	500	500	600
SERVICES	7.5	0.06	30	300	9	0.8	107	15	135	0.50	150	150	450
PROPERTY MANAGEMENT	5	0.06	5	329	2	0.8	37	15	30	0.15	49	49	50
LOBBY	7.5	0.06	30	1200	36	0.8	428	15	540	0.50	600	600	600
FLEX SPACE	7.5	0.06	30	908	28	0.8	331	15	420	0.50	454	454	475
OFFICE	5	0.06	5	269	2	0.8	30	15	30	0.15	40	40	50
MEETING	5	0.06	5	181	1	0.8	20	15	15	0.15	27	27	50
LAUNDRY LEVEL 2	5	0.12	10	180	2	0.8	40	15	30	0.15	27	40	50
LAUNDRY LEVEL 3	5	0.12	10	180	2	0.8	40	15	30	0.15	27	40	50
LAUNDRY LEVEL 4	5	0.12	10	180	2	0.8	40	15	30	0.15	27	40	50

MEP COORDINATION MATRIX

COORDINATION MATRIX

Item	Furnished By	Installed By	Power Wiring By	Control Wiring By	Testing & Balancing By
MECHANICAL & PLUMBING					
Equipment Motors	M	M	E	M	M
Magnetic Motor Starters, automatically controlled with or without HOA switches	E	E	E	M	M
Magnetic Motor Starters, manually controlled	E	E	E	NA	M
Magnetic Motor Starters, furnished with mechanical equipment, factory mounted	M	M	E	M	M
Sail switches if required for positive air flow annunciation	NA	NA	NA	NA	NA
Variable Frequency Drives	M	M	E	M	M
Disconnect switches and 120-volt recepts	E	E	E	--	--
Disconnect switches, manual motor starters, thermal overload switches	E	E	E	NA	M
MECH Controls, valves, float controls, damper motors, other misc.	M	M	E	M	M
MECH Controls, line voltage T-stats	E	E	E	E	M
Environmental Control Systems	M	M	E	M	M
Electric Cabinet Heaters, unit heaters	E	E	E	E	E
Electric duct heating coils	M	M	E	M	M
Duplex Sump Controller & Starters	M	E	E	E	M
Heat Trace	E	E	E	E	M
Solenoid Valves	P	P	E	E	P
OTHER					
Light pole concrete bases	E	E	N/A	N/A	N/A
Housekeeping concrete pads	GC	GC	N/A	N/A	N/A
Irrigation controller	GC	E	N/A	GC	GC
Motorized doors	GC	GC	E	GC	GC
FIRE ALARM / FIRE PUMP					
Smoke Fire Dampers	M	M	E	FA	M
Fire, flow switches, tamper switches	S	S	E	FA	M
Fire Pump & Transfer Switch	S	S	E	E	S
Duct Smoke Detectors	M	M	E	FA	FA
ELEVATOR					
Elevator Sump & Controller	M	M	E	M	M
Heat & smoke detectors in hoistway and elev room (if required)	FA	FA	N/A	FA	FA
Elevator Shunt Trip	E	E	E	FA	E

Mechanical Contractor	M
Electrical Contractor	E
Plumbing Contractor	P
Sprinkler Contractor	S
Fire Alarm Contractor	FA
General Contractor	GC

FIRE PUMP ROOM VENTILATION CALCS

Emerald City Engineers, Inc. — **Project Name:** 231 Grant
21705 Highway 99 — **Project Number:** 2293-007
Lynnwood, WA 98036 — **Edited By:** ML

Fire Pump Room - Cooling Calculations

ASSUMPTIONS:
MAX ROOM DESIGN TEMP (F) = 104
OUTDOOR DESIGN TEMPERATURE (F) = 85

Fire Pump	**Rated HP**		
Main Pump (Estimated)	100		
Jockey Pump (Estimated)	5		
Total HP of Pumps (Tot. HP)	**105**	**HP**	**= 78 kW**

Estimated Motor Estimated Efficiency, (Eff) **75%**

Heat loss (Power x (1-Eff)): **20** **kW**

CFM = (HEAT OUTPUT) ÷ [(ROOM DESIGN TEMP - OUTDOOR DESIGN TEMP) x1.08] = **3241** **CFM**

PROVIDE 3,500 CFM EXHAUST FAN INTERLOCKED WITH COOLING THERMOSTAT.
FAN AND ASSOCIATED EQUIPMENT SHALL NOT ENCROACH INTO FIRE PUMP ROOM.
MAINTAIN A COOLING SETPOINT OF 80 F (ADJUSTABLE).

VENTILATION HERS TESTING REQUIREMENTS

UNBALANCED VENTILATION SYSTEMS ARE PROVIDED ON THIS PROJECT. THE GC IS RESPONSIBLE FOR PROVIDING HERS TESTING AND VERIFICATION AS REQUIRED BY THE 2019 TITLE-24 ENERGY CODE AND AS REQUIRED BY THE TITLE-24 REPORT FOR THE RESIDENTIAL PORTION OF THE PROJECT.

CONTINUOUSLY OPERATING SUPPLY VENTILATION SYSTEMS OR CONTINUOUS OPERATING EXHAUST VENTILATION SYSTEMS SHALL BE ALLOWED TO BE USED TO PROVIDE THE REQUIRED DWELLING UNIT VENTILATION AIRFLOW IF THE DWELLING-UNIT ENVELOPE LEAKAGE IS LESS THAN OR EQUAL TO 0.3 CUBIC FEET PER MINUTE AT 50 PA (0.2 IN. OF WATER) PER SQUARE FEET OF DWELLING UNIT ENVELOPE SURFACE AREA. THIS SHALL BE CONFIRMED BY FIELD VERIFICATION AND DIAGNOSTIC TESTING IN ACCORDANCE WITH REFERENCE NONRESIDENTIAL APPENDIX NA7.18.2 (HIGH-RISE RESIDENTIAL) OR IN ACCORDANCE WITH REFERENCE NONRESIDENTIAL APPENDIX RA3.8 (LOW-RISE RESIDENTIAL).

CONSTRUCTION METHODS SHALL BE PERFORMED TO ALLOW COMPLIANCE WITH THE ENVELOPE LEAKAGE RATE ESTABLISHED BY THE CODE. OBTAIN HERS RATER FIELD VERIFICATION AS SPECIFIED IN THE CEC REFERENCE NONRESIDENTIAL APPENDIX AS PART THE ACCEPTANCE TESTING MEASURES.

KITCHEN RANGE HOODS:

CEC 150.0(O)1.G: RESIDENTIAL KITCHEN RANGE HOODS SHALL BE RATED FOR SOUND IN ACCORDANCE WITH SECTION 7.2 OF ASHRAE 62.2. KITCHEN HOODS SHALL BE RATED FOR SOUND AT A MAXIMUM OF 3 SONES AT ONE OR MORE AIRFLOW SETTING GREATER THAN OR EQUAL TO 100 CFM.

COUNTY OF SANTA CLARA
BUILDING INSPECTION OFFICE
PLANS APPROVED FOR PERMIT
RECORD NO.: DEV22-1242
BY: Warren Krause Date: 7/28/2023
HARD COPY OF THESE STAMPED PLANS MUST BE ON THE SITE FOR INSPECTIONS

VAN METER WILLIAMS POLLACK LLP
ARCHITECTURE | URBAN DESIGN ■ SAN FRANCISCO | DENVER | MINNEAPOLIS
333 Bryant Street, Suite 300, San Francisco, CA 94107 T 415.974.5352

☐ **CIVIL ENGINEER**
BKF - SAN JOSE
1730 N. FIRST ST. STE 600
SAN JOSE, CA 95112

☐ **LANDSCAPE ARCHITECT**
PLURAL STUDIO
2742 17TH STREET
SAN FRANCISCO, CA 94110

☐ **STRUCTURAL ENGINEER**
HOHBACH-LEWIN
250 SHERIDAN AVE STE 100
PALO ALTO, CA 94306

☐ **MEP ENGINEER**
EMERALD CITY ENGINEERS
21705 HIGHWAY 99
LYNWOOD, WA 98036

☐ **SUSTAINABILITY/ENERGY**
REDWOOD ENERGY
1887 Q STREET
ARCATA, CA 95521

EMERALD CITY ENGINEERS, INC
21705 Highway 99
Lynnwood, WA 98036
TEL: 425-741-1200

REGISTERED PROFESSIONAL ENGINEER MASSAMAGHAN KONI No. M38848 EXP. 03-31-24 MECHANICAL STATE OF CALIFORNIA
03/16/23

ID	DATE	NAME
1	11/11/22	PERMIT SET - CONV
A	12/16/22	BID SET
B	03/20/23	BID ADDENDUM SET
2	03/20/23	PLAN CHECK COMMENT RESPONSES SET

Project:

EDUCATOR HOUSING
231 GRANT AVENUE

231 GRANT AVENUE
PALO ALTO, CA 94306

Client:
mercy HOUSING
abode communities
MERCY HOUSING/
ABODE COMMUNITIES

SCHEDULES & CALCULATIONS

JOB #: 2293-007
SCALE:

M0.02

BID ADDENDUM SET | DATE: 03/20/2023

COPYRIGHT 2023, EMERALD CITY ENGINEERS, INC.
MLEBLANC J:\2293-007 231 GRANT, PALO ALTO, CA\DWG\M002 SCHEDULES & CALCULATIONS.DWG 03-16-2023 10:16

VIBRATION AND ACOUSTICAL ISOLATION

THE FOLLOWING MEASURES SHALL BE TAKEN TO MINIMIZE VIBRATION AND NOISE TRANSMISSION FROM HVAC EQUIPMENT TO THE INTERIOR SPACES:

NOTE: IN ADDITION TO THE MEASURES LISTED BELOW, CONTRACTOR SHALL REVIEW ACOUSTICAL REPORT AND PROVIDE ALL REQUIRED EQUIPMENT LISTED IN REPORT FOR ALL HVAC EQUIPMENT AND PIPING. ACOUSTICAL REQUIREMENTS LISTED IN REPORT SHALL SUPERSEDE ANY MEASURES LISTED BELOW. NOT ALL ACOUSTICAL MEASURES ARE LISTED BELOW.

ROOFTOP AIR HANDLERS:

A) MOUNT UNITS ON SPRING ISOLATORS WITH A MINIMUM 2" STATIC DEFLECTION.
B) PROVIDE FLEX CONNECTOR BETWEEN UNIT AND ANY DUCTWORK.

FAN COIL UNITS:

A) PROVIDE FLEX CONNECTOR BETWEEN UNIT AND ANY DUCTWORK.
B) SUSPEND WITH THREADED ROD AND 1" SPRING ISOLATORS.

ROOF MOUNTED EXHAUST FANS:

A) PROVIDE FLEX CONNECTOR BETWEEN FAN AND ANY DUCTWORK.
B) MOUNT ON SPRING ISOLATORS WITH A MINIMUM 2" STATIC DEFLECTION.

GARAGE MOUNTED CONDENSERS:

A) SUSPEND WITH THREADED ROD AND 1" SPRING ISOLATORS.
B) DOUBLE DEFLECTION NATURAL RUBBER HANGERS.

GARAGE EXHAUST & TRANSFER FANS:

A) SUSPEND WITH THREADED ROD AND 1" SPRING ISOLATORS.

INLINE FANS:

A) PROVIDE FLEX CONNECTOR BETWEEN UNIT AND ANY DUCTWORK.
B) SUSPEND FANS WITH THREADED ROD AND 1" SPRING ISOLATORS. COMBINATION SPRINT & RUBBER HANGERS WITH A MINIMUM 1" STATIC DEFLECTION.

B

ACOUSTICAL RECOMMENDATIONS:

HVAC EQUIPMENT:

1. NOISE CRITERIA FOR VARIOUS SPACE TYPES, DUE TO VENTILATION SYSTEM NOISE, ARE LISTED BELOW (BASED ON THE MIDDLE RANGE IN THE ASHRAE GUIDELINES SINCE THESE ARE MARKET RATE APARTMENTS).

2. MANUFACTURER–PROVIDED SOUND LEVELS SHOULD BE SUBMITTED FOR ALL NOISE–GENERATING MECHANICAL AND ELECTRICAL EQUIPMENT.

3. INTERNALLY LINED DUCTWORK AND/OR ACOUSTICAL FLEXIBLE DUCT SHOULD BE PROVIDED DOWNSTREAM OF FAN COIL UNIT/FANS. ONE–INCH THICK DUCTLINER BOARD SHOULD BE USED UNLESS OTHERWISE APPROVED BY THE ARCHITECT. FLEXIBLE DUCT SHOULD NOT PENETRATE SOUND–RATED CONSTRUCTIONS.

4. MUSHROOM FANS SHOULD NOT BE USED. WE RECOMMEND THAT CABINET/UTILITY SET FANS BE USED INSTEAD.

5. AIR REGISTERS SHOULD BE RATED WITH NC RATINGS AT LEAST FIVE POINTS LESS THAN THE CRITERION FOR THE SPACE BEING SERVED (SEE HVAC EQUIPMENT ITEM 1).

6. TOILET EXHAUST FANS SHOULD BE RATED AT A MAXIMUM NOISE LEVEL OF 2.0 SONES. IN ADDITION, CONSIDER PLACING THE FAN AND LIGHT ON SEPARATE SWITCHES.

7. THE KITCHEN HOOD FANS SHOULD BE MULTI–SPEED UNITS.

HVAC VIBRATION ISOLATION:

8. ALL VIBRATION ISOLATION SHOULD CONFORM TO ASHRAE STANDARDS. THE ASHRAE GUIDELINES INCLUDE ITEMS SUCH AS SPRING ISOLATORS AND INERTIA BASES AS WELL AS ANCILLARY ITEMS SUCH AS FLEXIBLE PIPING AND ELECTRICAL CONNECTIONS. SUBMITTALS FOR ALL PROPOSED ISOLATION ARE REQUIRED. ALL VIBRATION ISOLATION DEVICES SHOULD BE FROM A SINGLE MANUFACTURER.

9. WE RECOMMEND THAT UNHOUSED SPRINGS BE USED. WHERE NECESSARY, SEPARATE SEISMIC SNUBBERS SHOULD BE USED. WE ALSO RECOMMEND EXTERNAL SPRING ISOLATION; IF INTERNAL SPRINGS ARE USED, THEN THE HOUSING SHOULD BE SPECIFIED ON NEOPRENE WAFFLE PADS. THE ACOUSTICAL VIBRATION ISOLATION MUST NOT COMPROMISE SEISMIC CODE REQUIREMENTS AND VICE–VERSA.

10. THE ISOLATION DEVICES SHOULD BE AS FOLLOWS.
    A. UNHOUSED SPRINGS EQUAL TO MASON SLFH
    B. SEISMIC SNUBBERS EQUAL TO MASON Z–1225
    C. RESTRAINED SPRINGS EQUAL TO MASON SLR 100 SERIES
    D. SPRING CURBS EQUAL TO MASON RSC
    E. CAPTIVE NEOPRENE MOUNTS EQUAL TO MASON BR
    F. SPRING–AND–NEOPRENE HANGERS EQUAL TO MASON 30N
    G. NEOPRENE HANGERS EQUAL TO MASON HD
    H. 3/4–INCH NEOPRENE WAFFLE PADS EQUAL TO MASON SUPER W (AND INCORPORATE MASON HG GROMMETS)

11. ALL ATTACHMENTS TO VIBRATION–ISOLATED EQUIPMENT SHOULD BE MADE FLEXIBLE: TWIN–SPHERE RUBBER CONNECTORS FOR PIPES (EQUAL TO MASON SAFEFLEX), BELLOWS–TYPE CANVAS FOR DUCTS, AND FLEXIBLE HOSE FOR CONDUIT. METAL–BRAIDED HOSE PIPE CONNECTORS ARE NOT CONSIDERED ACOUSTICALLY FLEXIBLE.

12. HORIZONTAL FAN–COIL UNITS/HEAT PUMPS SHOULD BE SUSPENDED FROM NEOPRENE HANGERS. VERTICAL UNITS CAN BE INSTALLED ON NEOPRENE WAFFLE PADS.

13. ANY ROOFTOP CONDENSER UNITS SHALL BE SPRING ISOLATED; JUST USING NEOPRENE ISOLATION IS NOT SUFFICIENT.

14. MEDIUM AND HIGH–PRESSURE DUCTWORK RISER SUPPORTS SHALL BE ISOLATED FROM THE STRUCTURE WITH CAPTIVE NEOPRENE MOUNTS OR ISOLATED WAFFLE PADS.

PIPING AND DUCTWORK:

15. ALL HVAC AND DOMESTIC PIPING – INCLUDING SUPPLY WATER, WASTE, DRAIN, HYDRONIC, CONDENSER WATER, AND RAINWATER LEADERS – SHALL BE VIBRATION ISOLATED FROM THE STRUCTURE, OTHER PIPING, DUCTWORK, GYPSUM BOARD, ETC. THIS INCLUDES PIPE PENETRATIONS THROUGH FRAMING, PIPES RUNNING ALONG FRAMING MEMBERS, AND HANGERS.

    THIS REQUIREMENT APPLIES FOR ALL PIPES ATTACHED TO A PARTITION ADJACENT TO OCCUPIED SPACES AND ALSO TO PIPES SUSPENDED FROM STRUCTURE THAT SUPPORTS THE FLOOR OF OCCUPIED SPACES. EVEN THOUGH PLUMBING CODES DO NOT REQUIRE ATTACHMENT S AT EVERY PENETRATION, AN ISOLATOR SHOULD BE USED AT EACH OCCURRENCE.

26. WHERE DUCTS, LARGE PIPES (THREE INCH DIAMETER OR GREATER), CONDUIT, OR SIMILAR PENETRATE SOUND RATED CONSTRUCTIONS, THE OPENING SHOULD BE OVERSIZED BY ONE INCH AND SEALED AIRTIGHT WITH SAFING AND ACOUSTICALLY RATED CAULKING.

COUNTY OF SANTA CLARA
BUILDING INSPECTION OFFICE
PLANS APPROVED FOR PERMIT

RECORD NO.: DEV22-1242

BY: Warren Krause Date: 7/28/2023

HARD COPY OF THESE STAMPED PLANS MUST BE ON THE SITE FOR INSPECTIONS

COPYRIGHT 2023, EMERALD CITY ENGINEERS, INC.
WLEBLANC J:\2293-007 231 GRANT, PALO ALTO, CA\DWG\M003 NOTES.DWG 03-16-2023 10:16

VAN METER WILLIAMS POLLACK LLP
ARCHITECTURE | URBAN DESIGN ■ SAN FRANCISCO | DENVER | MINNEAPOLIS
333 Bryant Street, Suite 300, San Francisco, CA 94107 T 415.974.5252

☐ CIVIL ENGINEER
BKF - SAN JOSE
1730 N. FIRST ST. STE 600
SAN JOSE, CA 95112

☐ LANDSCAPE ARCHITECT
PLURAL STUDIO
2742 17TH STREET
SAN FRANCISCO, CA 94110

☐ STRUCTURAL ENGINEER
HOHBACH-LEWIN
250 SHERIDAN AVE STE 100
PALO ALTO, CA 94306

☐ MEP ENGINEER
EMERALD CITY ENGINEERS
21705 HIGHWAY 99
LYNWOOD, WA 98036

☐ SUSTAINABILITY/ENERGY
REDWOOD ENERGY
1887 Q STREET
ARCATA, CA 95521

EMERALD CITY ENGINEERS, INC
21705 Highway 99
Lynnwood, WA 98036
TEL: 425-741-1200

REGISTERED PROFESSIONAL ENGINEER
MASSAMAGHAN KOHLER
No. 32668
EXP. 03-31-24
MECHANICAL
STATE OF CALIFORNIA

03/16/23

ID	DATE	NAME
1	11/11/22	PERMIT SET - CONV
A	12/16/22	BID SET
B	03/20/23	BID ADDENDUM SET
2	03/20/23	PLAN CHECK COMMENT RESPONSES SET

Project:

EDUCATOR HOUSING
231 GRANT AVENUE

231 GRANT AVENUE
PALO ALTO, CA 94306

Client:

MERCY HOUSING/
ABODE COMMUNITIES

NOTES

JOB #: 2293-007

SCALE:

M0.03

BID ADDENDUM SET | DATE: 03/20/2023

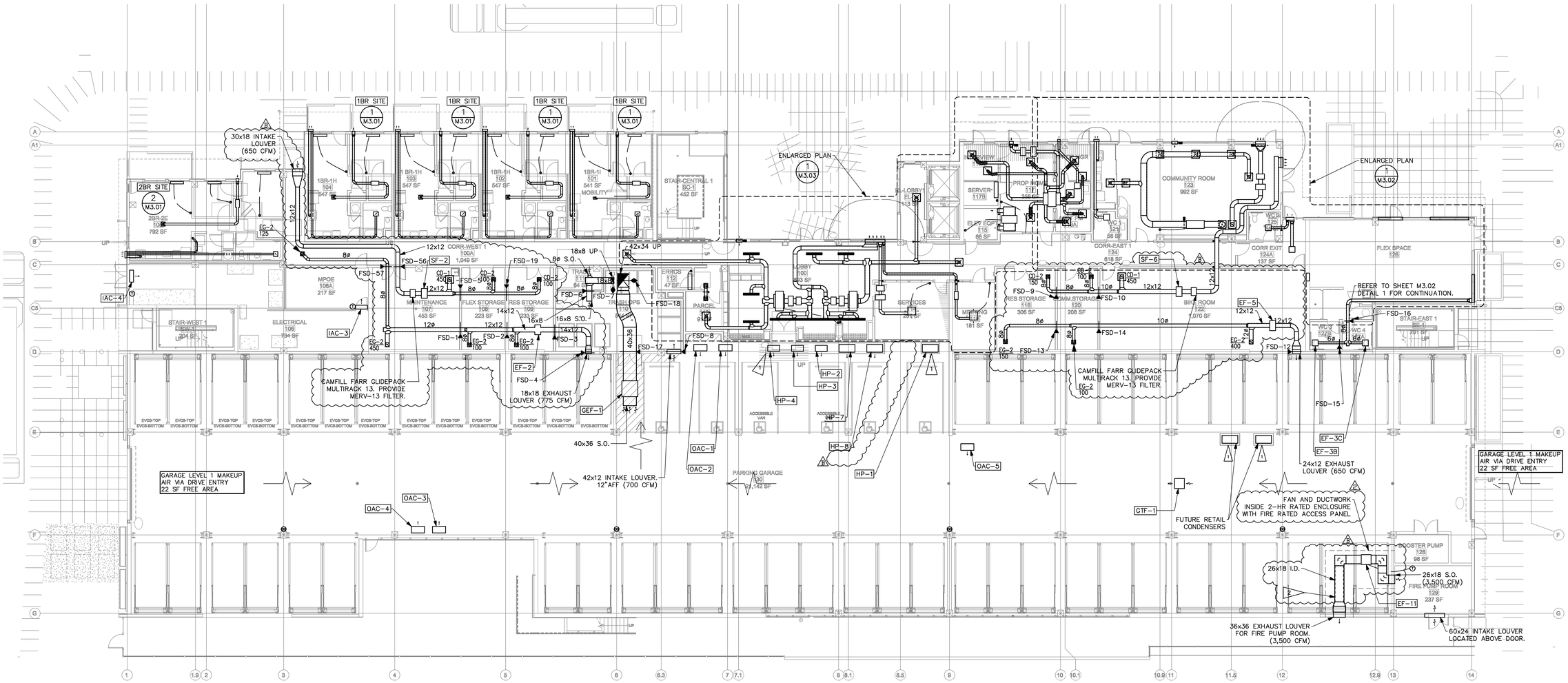

FLOOR PLAN – FIRST FLOOR

SCALE: 3/32" = 1'-0"

PROJECT TRUE

GARAGE VENTILATION CALCULATIONS:

VENTILATION CALCULATION			
AREA (SQ FT)	MINIMUM INTERMITTENT VENTILATION*	MINIMUM CONTINUOUS VENTILATION**	SUPPLIED VENTILATION
21,250	0.75 CFM/SF 15,938 CFM	0.15 CFM/SF 3,188 CFM	(A) 4,000 CFM CONTINOUS 16,000 CFM INTERMITTENT

*See 2019 California Mechanical Code Table 403.7
**See 2019 California Energy Code Section 120.6

PLAN NOTES:

1. FOR DUCT SIZES WITHIN UNITS, REFER TO ENLARGED UNIT PLANS.

UNIT 1BR = UNIT TYPE. FOR EXAMPLE, REFER TO UNIT TYPE A1.

3 / M3.00 = ENLARGED PLAN. FOR EXAMPLE, REFER TO DETAIL 3 ON SHEET M3.00

2. ALL MECHANICAL INTAKES SHALL BE LOCATED MIN. 10'-0" FROM EXHAUST OUTLETS.
3. SEE DETAILS 1, 2, & 3 ON SHEET M4.00 FOR FIRE DAMPER AND COMBINATION FIRE/SMOKE DAMPER INSTALLATION DETAILS.
4. SUSPEND CONDENSERS FROM CEILING, SEE DETAIL 2 ON SHEET M4.01 FOR ADDITIONAL INFORMATION. TYPICAL FOR ALL CONDENSERS IN THE GARAGE.
5. FOR COMMON AREA FAN COIL MOUNTING, SEE DETAIL 5 ON SHEET M4.01 FOR ADDITIONAL INFORMATION.

HEAT PUMP NOTES:

HEAT PUMP NUMBER / RESIDENTIAL UNIT NUMBER: HP-1-151

CONTRACTOR SHALL LABEL EACH OUTSIDE HEAT PUMP WITH THE ASSOCIATED RESIDENTIAL UNIT NUMBER. LABEL SHALL BE WEATHERPROOF AND PERMANENTLY AFFIXED TO THE CONDENSER.

VOLUME DAMPER NOTES:

PROVIDE AN ACCESSIBLE MANUAL VOLUME DAMPER FOR EACH SUPPLY, RETURN, OSA, AND EXHAUST OPENING, LOCATED AS FAR UPSTREAM AS POSSIBLE FROM THE OPENING. PROVIDE MANUAL DAMPER FOR BRANCH MAINS SERVING MORE THAN ONE OPENING. VOLUME DAMPERS IN NON-ACCESSIBILE CEILINGS SHALL HAVE A CONTROL ARM EXTENDED TO AN ACCESSIBLE LOCATION. PROVIDE "YOUNG" REGULATOR OR EQUAL. EXACT LOCATION OF CONTROL DEVICES VISIBLE IN FINISHED SPACES SHALL BE COORDINATED WITH THE ARCHITECT. NOTE: DUCTWORK/DIFFUSERS WITHIN RESIDENTIAL UNITS SHALL BE PROVIDED WITH OBD'S IN LIEU OF BALANCING DAMPERS OUTLINES ABOVE.

FLAG NOTES:

1. HVAC CONTRACTOR SHALL PROVIDE SHEET METAL DRAIN PAN BELOW HEAT PUMPS WITH ¾" DRAIN CONNECTION. DRAIN PIPING PROVIDED BY PLUMBING CONTRACTOR. REFER TO DETAIL 2 ON M4.01 FOR CONDENSER MOUNTING.
2. PROVIDE 1" THICK INTERNAL DUCTLINER PER ACOUSTICAL RECOMMENDATION.

COUNTY OF SANTA CLARA
BUILDING INSPECTION OFFICE
PLANS APPROVED FOR PERMIT
RECORD NO.: DEV22-1242
BY: Warren Kraese Date: 7/28/2023
HARD COPY OF THESE STAMPED PLANS MUST BE ON THE SITE FOR INSPECTIONS

COPYRIGHT 2023, EMERALD CITY ENGINEERS, INC.
M:\EBLANC J\2293-007 231 GRANT, PALO ALTO, CA\DWG\M201 FIRST FLOOR PLANDWG 03-16-2023 10:16

VAN METER WILLIAMS POLLACK LLP
ARCHITECTURE | URBAN DESIGN ■ SAN FRANCISCO | DENVER | MINNEAPOLIS
333 Bryant Street, Suite 300, San Francisco, CA 94107 T 415.974.5252

CIVIL ENGINEER
BKF - SAN JOSE
1730 N. FIRST ST. STE 600
SAN JOSE, CA 95112

LANDSCAPE ARCHITECT
PLURAL STUDIO
2742 17TH STREET
SAN FRANCISCO, CA 94110

STRUCTURAL ENGINEER
HOHBACH-LEWIN
250 SHERIDAN AVE STE 100
PALO ALTO, CA 94306

MEP ENGINEER
EMERALD CITY ENGINEERS
21705 HIGHWAY 99
LYNWOOD, WA 98036

SUSTAINABILITY/ENERGY
REDWOOD ENERGY
1887 Q STREET
ARCATA, CA 95521

EMERALD CITY ENGINEERS, INC
21705 Highway 99
Lynnwood, WA 98036
TEL: 425-741-1200

REGISTERED PROFESSIONAL ENGINEER
MASS/MAGHAN KONRATH
No. 42668
EXP: 03-31-24
MECHANICAL
STATE OF CALIFORNIA

03/16/23

ID	DATE	NAME
1	11/11/22	PERMIT SET - CONV
A	12/16/22	BID SET
B	03/20/23	BID ADDENDUM SET
2	03/20/23	PLAN CHECK COMMENT RESPONSES SET

Project:

EDUCATOR HOUSING
231 GRANT AVENUE

231 GRANT AVENUE
PALO ALTO, CA 94306

Client:

MERCY HOUSING/
ABODE COMMUNITIES

FLOOR PLAN - FIRST FLOOR

JOB #: 2293-007

SCALE:

M2.01

BID ADDENDUM SET | DATE: 03/20/2023

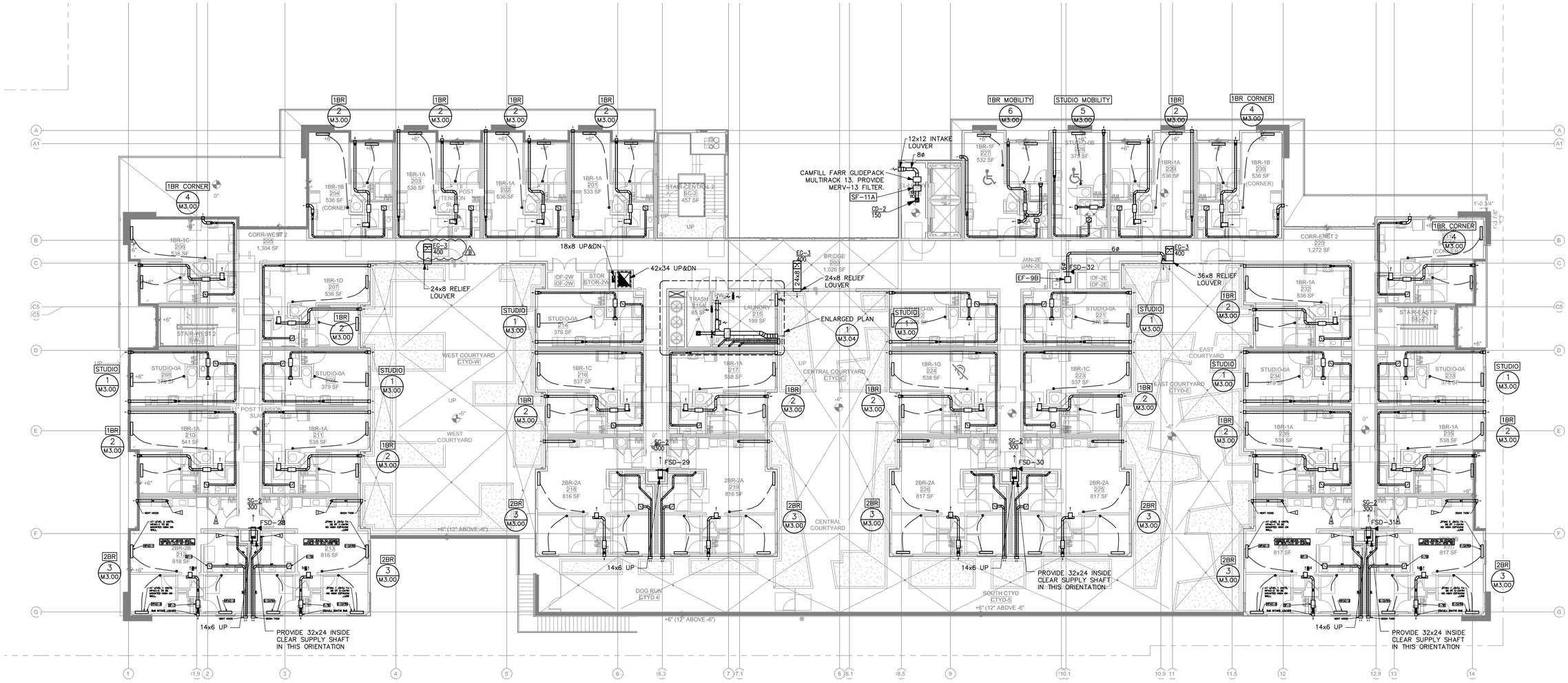

FLOOR PLAN – SECOND FLOOR

SCALE: 3/32" = 1'-0"

PROJECT TRUE

COUNTY OF SANTA CLARA
BUILDING INSPECTION OFFICE
PLANS APPROVED FOR PERMIT
RECORD NO.: DEV22-1242
BY: Warren Krause Date: 7/28/2023
HARD COPY OF THESE STAMPED PLANS MUST BE ON THE SITE FOR INSPECTIONS

COPYRIGHT 2023, EMERALD CITY ENGINEERS, INC.
M:\EBLANC J\2293-007 231 GRANT, PALO ALTO, CA\DWG\M202 SECOND FLOOR PLAN.DWG 03-16-2023 10:16

VAN METER WILLIAMS POLLACK LLP
ARCHITECTURE | URBAN DESIGN ■ SAN FRANCISCO | DENVER | MINNEAPOLIS
333 Bryant Street, Suite 300, San Francisco, CA 94107 T 415.974.5252

☐ CIVIL ENGINEER
BKF - SAN JOSE
1730 N. FIRST ST. STE 600
SAN JOSE, CA 95112

☐ LANDSCAPE ARCHITECT
PLURAL STUDIO
2742 17TH STREET
SAN FRANCISCO, CA 94110

☐ STRUCTURAL ENGINEER
HOHBACH-LEWIN
250 SHERIDAN AVE STE 100
PALO ALTO, CA 94306

☐ MEP ENGINEER
EMERALD CITY ENGINEERS
21705 HIGHWAY 99
LYNWOOD, WA 98036

☐ SUSTAINABILITY/ENERGY
REDWOOD ENERGY
1887 Q STREET
ARCATA, CA 95521

EMERALD CITY ENGINEERS, INC
21705 Highway 99
Lynnwood, WA 98036
TEL: 425-741-1200

REGISTERED PROFESSIONAL ENGINEER
MASS/MAGHAN KOHLER
No. 52668
EXP: 03-31-24
MECHANICAL
STATE OF CALIFORNIA

03/16/23

ID	DATE	NAME
1	11/11/22	PERMIT SET - CONV
A	12/16/22	BID SET
B	03/20/23	BID ADDENDUM SET
2	03/20/23	PLAN CHECK COMMENT RESPONSES SET

Project:

EDUCATOR HOUSING
231 GRANT AVENUE

231 GRANT AVENUE
PALO ALTO, CA 94306

Client:
MERCY HOUSING/
ABODE COMMUNITIES

FLOOR PLAN - SECOND FLOOR

JOB #: 2293-007

SCALE:

M2.02

BID ADDENDUM SET | DATE: 03/20/2023

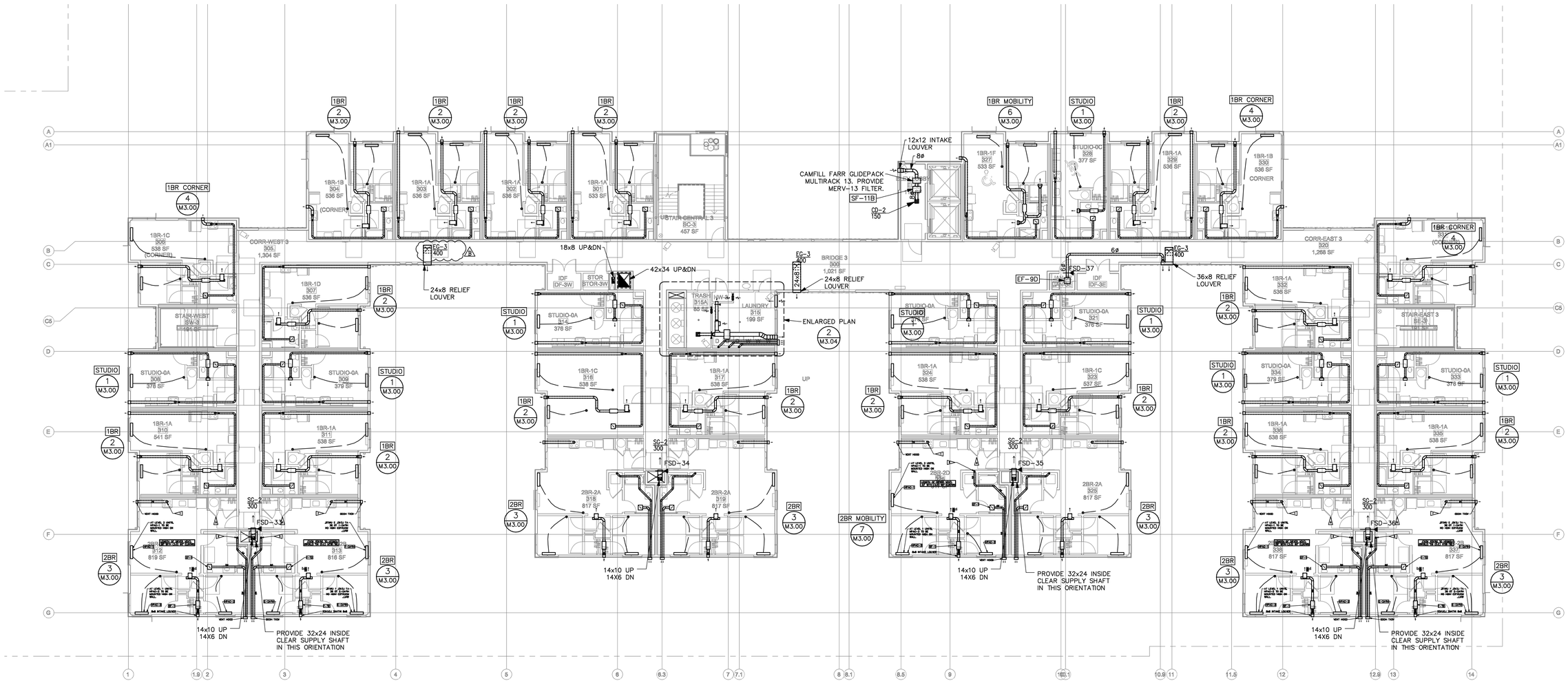

FLOOR PLAN – THIRD FLOOR

SCALE: 3/32" = 1'-0"

PROJECT TRUE NORTH

COUNTY OF SANTA CLARA
BUILDING INSPECTION OFFICE
PLANS APPROVED FOR PERMIT
RECORD NO.: DEV22-1242
BY: Warren Krause Date: 7/28/2023
HARD COPY OF THESE STAMPED PLANS MUST BE ON THE SITE FOR INSPECTIONS

COPYRIGHT 2023, EMERALD CITY ENGINEERS, INC.
M:\EEBLANC J:\2293-007 231 GRANT, PALO ALTO, CA\DWG\M203 THIRD FLOOR PLAN.DWG 03-16-2023 10:16

VAN METER WILLIAMS POLLACK LLP
ARCHITECTURE | URBAN DESIGN ■ SAN FRANCISCO | DENVER | MINNEAPOLIS
333 Bryant Street, Suite 300, San Francisco, CA 94107 T 415.974.5252

☐ CIVIL ENGINEER
BKF - SAN JOSE
1730 N. FIRST ST. STE 600
SAN JOSE, CA 95112

☐ LANDSCAPE ARCHITECT
PLURAL STUDIO
2742 17TH STREET
SAN FRANCISCO, CA 94110

☐ STRUCTURAL ENGINEER
HOHBACH-LEWIN
250 SHERIDAN AVE STE 100
PALO ALTO, CA 94306

☐ MEP ENGINEER
EMERALD CITY ENGINEERS
21705 HIGHWAY 99
LYNWOOD, WA 98036

☐ SUSTAINABILITY/ENERGY
REDWOOD ENERGY
1887 Q STREET
ARCATA, CA 95521

EMERALD CITY ENGINEERS, INC
21705 Highway 99
Lynnwood, WA 98036
TEL: 425-741-1200

REGISTERED PROFESSIONAL ENGINEER
MASS/MAGHAN KOHLER
No. 52668
EXP: 03-31-24
MECHANICAL
STATE OF CALIFORNIA

03/16/23

ID	DATE	NAME
1	11/11/22	PERMIT SET - CONV
A	12/16/22	BID SET
B	03/20/23	BID ADDENDUM SET
2	03/20/23	PLAN CHECK COMMENT RESPONSES SET

Project:

EDUCATOR HOUSING
231 GRANT AVENUE

231 GRANT AVENUE
PALO ALTO, CA 94306

Client:
mercy HOUSING
abode communities
MERCY HOUSING/
ABODE COMMUNITIES

FLOOR PLAN - THIRD FLOOR

JOB #: 2293-007

SCALE:

M2.03

BID ADDENDUM SET | DATE: 03/20/2023

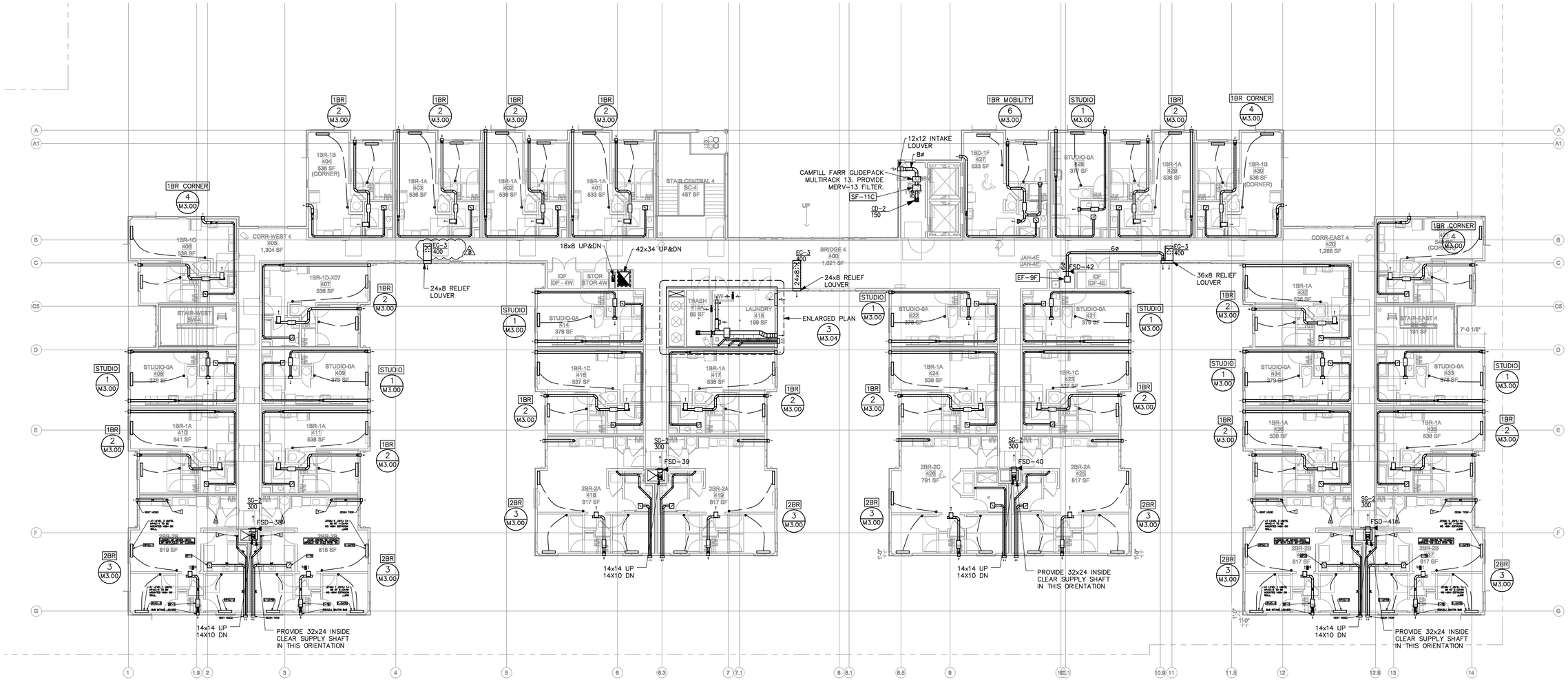

FLOOR PLAN – FOURTH FLOOR

SCALE: 3/32" = 1'-0"

PROJECT NORTH / TRUE NORTH

COUNTY OF SANTA CLARA
BUILDING INSPECTION OFFICE
PLANS APPROVED FOR PERMIT
RECORD NO.: DEV22-1242
BY: Warren Krause Date: 7/28/2023
HARD COPY OF THESE STAMPED PLANS MUST BE ON THE SITE FOR INSPECTIONS

COPYRIGHT 2023, EMERALD CITY ENGINEERS, INC.
M:\EBLANC J\2293-007 231 GRANT, PALO ALTO, CA\DWG\M204 FOURTH FLOOR PLANDWG 03-16-2023 10:16

VAN METER WILLIAMS POLLACK LLP
ARCHITECTURE | URBAN DESIGN ■ SAN FRANCISCO | DENVER | MINNEAPOLIS
333 Bryant Street, Suite 300, San Francisco, CA 94107 T 415.974.5252

☐ CIVIL ENGINEER
BKF - SAN JOSE
1730 N. FIRST ST. STE 600
SAN JOSE, CA 95112

☐ LANDSCAPE ARCHITECT
PLURAL STUDIO
2742 17TH STREET
SAN FRANCISCO, CA 94110

☐ STRUCTURAL ENGINEER
HOHBACH-LEWIN
250 SHERIDAN AVE STE 100
PALO ALTO, CA 94306

☐ MEP ENGINEER
EMERALD CITY ENGINEERS
21705 HIGHWAY 99
LYNWOOD, WA 98036

☐ SUSTAINABILITY/ENERGY
REDWOOD ENERGY
1887 Q STREET
ARCATA, CA 95521

EMERALD CITY ENGINEERS, INC
21705 Highway 99
Lynnwood, WA 98036
TEL: 425-741-1200

REGISTERED PROFESSIONAL ENGINEER
MASS/MAGHAN KOHLER
No. 52628
EXP: 03-31-24
MECHANICAL
STATE OF CALIFORNIA

03/16/23

ID	DATE	NAME
1	11/11/22	PERMIT SET - CONV
A	12/16/22	BID SET
B	03/20/23	BID ADDENDUM SET
2	03/20/23	PLAN CHECK COMMENT RESPONSES SET

Project:

EDUCATOR HOUSING
231 GRANT AVENUE

231 GRANT AVENUE
PALO ALTO, CA 94306

Client:
MERCY HOUSING/
ABODE COMMUNITIES

FLOOR PLAN - FOURTH FLOOR

JOB #: 2293-007

SCALE:

M2.04

BID ADDENDUM SET | DATE: 03/20/2023

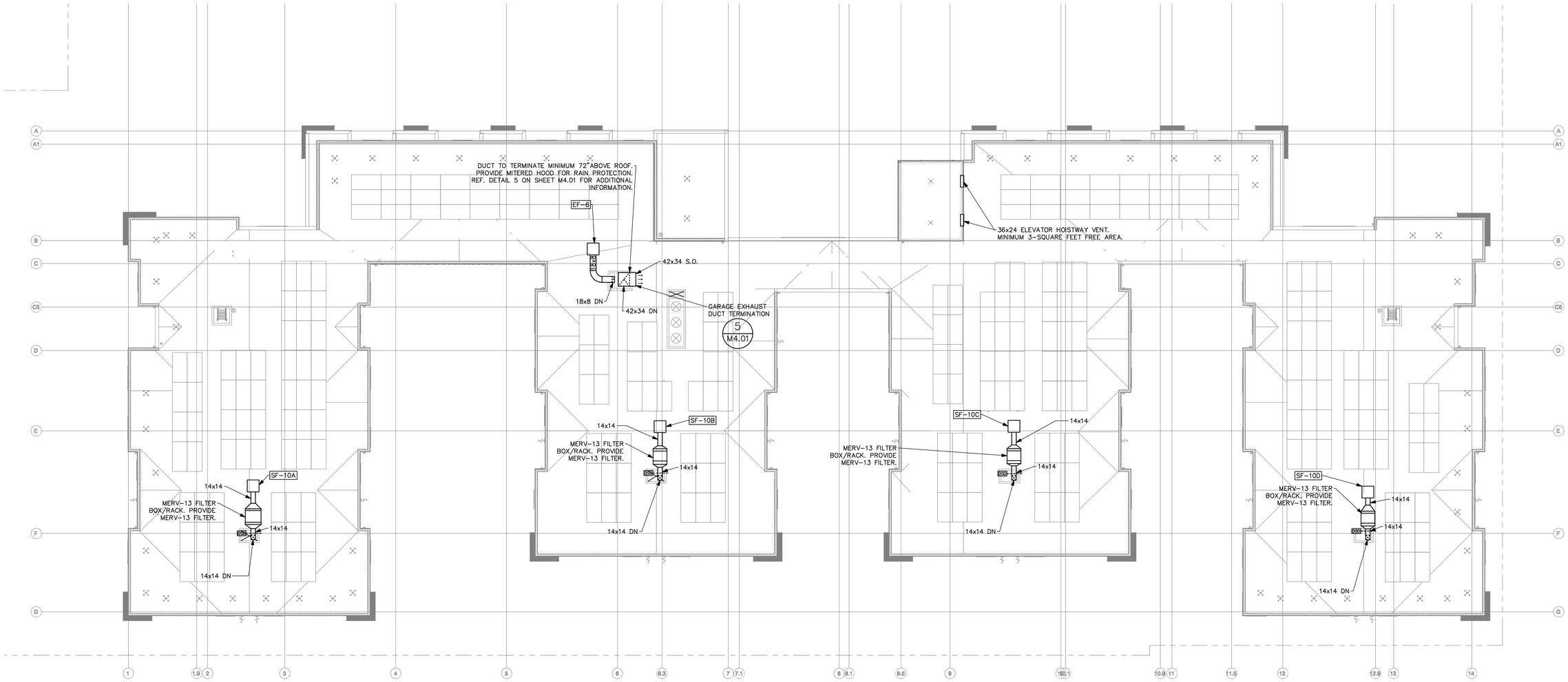

FLOOR PLAN – ROOF

SCALE: 3/32" = 1'-0"

PROJECT TRUE

PLAN NOTES:

1. FLEXIBLE DUCT CONNECTORS TO BE PROTECTED FROM WEATHER AND SUNLIGHT AS REQUIRED PER CODE.

COUNTY OF SANTA CLARA
BUILDING INSPECTION OFFICE
PLANS APPROVED FOR PERMIT

RECORD NO.: DEV22-1242

BY: Warren Krause Date: 7/28/2023

HARD COPY OF THESE STAMPED PLANS MUST BE ON THE SITE FOR INSPECTIONS

COPYRIGHT 2023, EMERALD CITY ENGINEERS, INC.
WLEBLANC J:\2293-007 231 GRANT, PALO ALTO, CA\DWG\M205 ROOF PLANDWG 03-16-2023 10:15

VAN METER WILLIAMS POLLACK LLP
ARCHITECTURE | URBAN DESIGN ■ SAN FRANCISCO | DENVER | MINNEAPOLIS
333 Bryant Street, Suite 300, San Francisco, CA 94107 T 415.974.5252

CIVIL ENGINEER
BKF - SAN JOSE
1730 N. FIRST ST. STE 600
SAN JOSE, CA 95112

LANDSCAPE ARCHITECT
PLURAL STUDIO
2742 17TH STREET
SAN FRANCISCO, CA 94110

STRUCTURAL ENGINEER
HOHBACH-LEWIN
250 SHERIDAN AVE STE 100
PALO ALTO, CA 94306

MEP ENGINEER
EMERALD CITY ENGINEERS
21705 HIGHWAY 99
LYNWOOD, WA 98036

SUSTAINABILITY/ENERGY
REDWOOD ENERGY
1887 Q STREET
ARCATA, CA 95521

EMERALD CITY ENGINEERS, INC
21705 Highway 99
Lynnwood, WA 98036
TEL: 425-741-1200

REGISTERED PROFESSIONAL ENGINEER
MASSAMAGHAN KOMEILY
No. 22668
EXP: 03-31-24
MECHANICAL
STATE OF CALIFORNIA

03/16/23

ID	DATE	NAME
1	11/11/22	PERMIT SET - CONV
A	12/16/22	BID SET
B	03/20/23	BID ADDENDUM SET
2	03/20/23	PLAN CHECK COMMENT RESPONSES SET

Project:

EDUCATOR HOUSING
231 GRANT AVENUE

231 GRANT AVENUE
PALO ALTO, CA 94306

Client:

MERCY HOUSING/
ABODE COMMUNITIES

FLOOR PLAN - ROOF

JOB #: 2293-007

SCALE:

M2.05

BID ADDENDUM SET | DATE: 03/20/2023

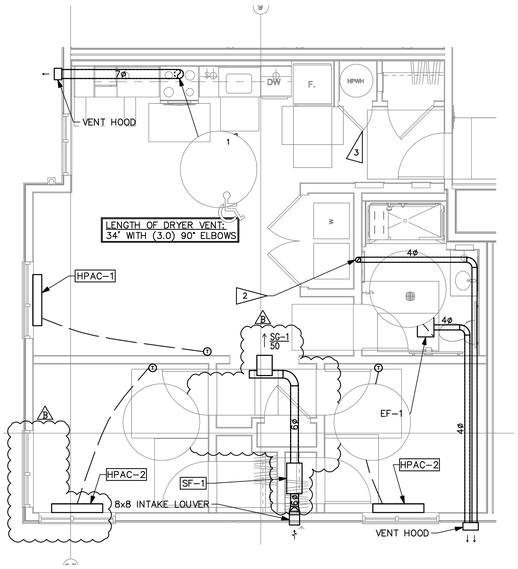

2BR MOBILITY

ENLARGED UNIT PLAN — 7 / M3.00

SCALE: 1/4" = 1'-0"

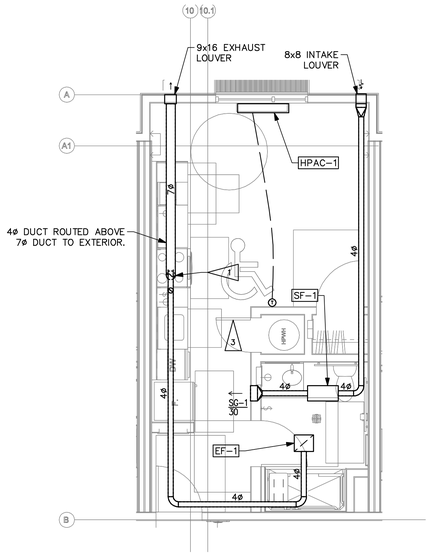

STUDIO MOBILITY

ENLARGED UNIT PLAN — 5 / M3.00

SCALE: 1/4" = 1'-0"

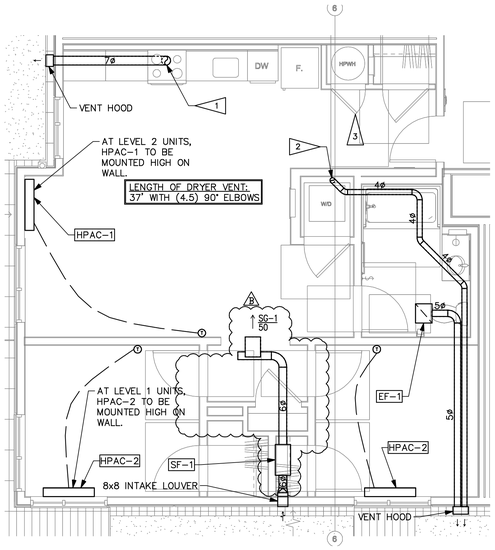

2BR

ENLARGED UNIT PLAN — 3 / M3.00

SCALE: 1/4" = 1'-0"

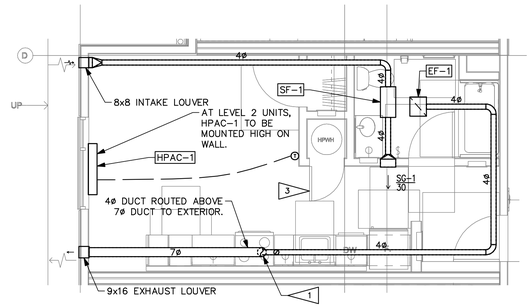

STUDIO

ENLARGED UNIT PLAN — 1 / M3.00

SCALE: 1/4" = 1'-0"

1BR MOBILITY

ENLARGED UNIT PLAN — 6 / M3.00

SCALE: 1/4" = 1'-0"

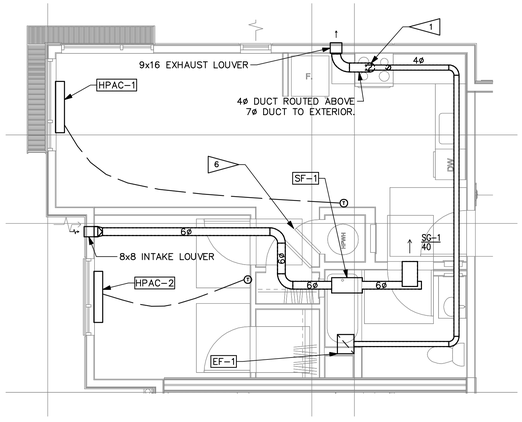

1BR CORNER

ENLARGED UNIT PLAN — 4 / M3.00

SCALE: 1/4" = 1'-0"

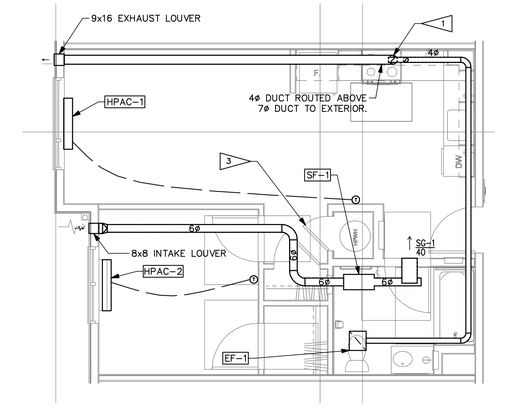

1BR

ENLARGED UNIT PLAN — 2 / M3.00

SCALE: 1/4" = 1'-0"

FLAG NOTES:

1. POC RANGE HOOD, TRANSITION AS REQUIRED.
2. POC DRYER. DRYER CONNECTIONS SHALL BE LISTED AND LABELED PER 2019 CMC. PROVIDE BACKDRAFT DAMPER.
3. PER MANUFACTURER'S INSTALLATION GUIDE. PROVIDE FULL LOUVERED DOOR FOR WATER HEATER MAKE-UP AIR.

NOTES:

1. LAUNDRY CLOSET HAS LOUVERED DOOR FOR VENTILATION AIR TO LAUNDRY CLOSET, 100 SQ-IN MIN. OPENING IN DOOR.
2. FLEXIBLE DUCTS SHALL COMPLY WITH UL181 AND SHALL BE INSTALLED PER THE MANUFACTURE'S INSTALLATION INSTRUCTIONS AND PER SMACNA HVAC DUCT CONSTRUCTION STANDARDS PER CMC 603.5.
3. EXHAUST TERMINATIONS SHALL MAINTAIN 3' SEPARATION TO OPENINGS AND 10' SEPARATION TO MECHANICAL INTAKES.
4. RESIDENTIAL UNITS AT LEVEL 2 HPAC UNITS TO BE MOUNTED HIGHER ON WALL TO KEEP EXTERIOR EXHUAST AND INTAKE LOCATION ABOVE PODIUM PLANTER WALLS.

DRYER NOTES:

PER MANUFACTURER'S INSTALLATION INSTRUCTIONS, THE MAXIMUM LENGTH OF THE DRYER VENT IS AS FOLLOWS:

125 FEET WITH 0 ELBOW
115 FEET WITH 1 ELBOW
105 FEET WITH 2 ELBOWS
95 FEET WITH 3 ELBOWS
85 FEET WITH 4 ELBOWS

DRYER MODEL LENGTHS ARE SPECIFIED FROM ELECTROLUX ELFE7537AT CONFIRM DRYER LENGTHS IF DIFFERENT MODEL IS SPECIFIED.

EXHAUST VENT CAPS

EXHAUST VENT CAPS FOR RESIDENTIAL UNIT DRYER, BATHROOM AND RANGE EXHAUST SHALL BE ALUMINUM VENT CAPS PAINTED TO MATCH ADJACENT EXTERIOR SURFACE. REVERSOMATIC MODEL ECA OR EQUAL. VENT HOODS SHALL HAVE A 4" MINIMUM OPENING DEPTH FROM THE FACE OF THE WALL FOR PROPER OPERATION OF FANS. CONTRACTOR MAY PROVIDE ALTERNATE PRICING FOR SINGLE HOODS ENCLOSING MULTIPLE VENTS – FOR EXAMPLE, (2) 4" VENTS UNDER A COMMON HOOD, REF DETAIL 1 ON M4.01.

EXHAUST HOOD DIMENSIONS

SIZE OF DUCT(S) ø"	DIMENSION (W"xH")
4	6x6
4 & 7	14x8
4, 4 & 7	18x8

RESIDENTIAL EXHAUST DUCT SIZING

DUCT TYPE	SIZE OF DUCT(S) ø"
KITCHEN	7
BATHROOM FAN	4
DRYER	4

COUNTY OF SANTA CLARA
BUILDING INSPECTION OFFICE
PLANS APPROVED FOR PERMIT
RECORD NO.: DEV22-1242
BY: Warren Krause Date: 7/28/2023
HARD COPY OF THESE STAMPED PLANS MUST BE ON THE SITE FOR INSPECTIONS

COPYRIGHT 2023, EMERALD CITY ENGINEERS, INC.
WEEBLANC J:\2293-007 231 GRANT, PALO ALTO, CA\DWG\M300 ENLARGED UNIT PLANS.DWG 03-16-2023 10:43

VAN METER WILLIAMS POLLACK LLP
ARCHITECTURE | URBAN DESIGN ■ SAN FRANCISCO | DENVER | MINNEAPOLIS
333 Bryant Street, Suite 300, San Francisco, CA 94107 T 415.974.5252

☐ CIVIL ENGINEER
BKF - SAN JOSE
1730 N. FIRST ST. STE 600
SAN JOSE, CA 95112

☐ LANDSCAPE ARCHITECT
PLURAL STUDIO
2742 17TH STREET
SAN FRANCISCO, CA 94110

☐ STRUCTURAL ENGINEER
HOHBACH-LEWIN
250 SHERIDAN AVE STE 100
PALO ALTO, CA 94306

☐ MEP ENGINEER
EMERALD CITY ENGINEERS
21705 HIGHWAY 99
LYNWOOD, WA 98036

☐ SUSTAINABILITY/ENERGY
REDWOOD ENERGY
1887 Q STREET
ARCATA, CA 95521

EMERALD CITY ENGINEERS, INC
21705 Highway 99
Lynnwood, WA 98036
TEL: 425-741-1200

REGISTERED PROFESSIONAL ENGINEER
MASSAMAGHAN KONGKEO
EXP: 03-31-24
MECHANICAL
STATE OF CALIFORNIA
03/16/23

ID	DATE	NAME
1	11/11/22	PERMIT SET - CONV
A	12/16/22	BID SET
B	03/20/23	BID ADDENDUM SET
2	03/20/23	PLAN CHECK COMMENT RESPONSES SET

Project:

EDUCATOR HOUSING
231 GRANT AVENUE

231 GRANT AVENUE
PALO ALTO, CA 94306

Client:

MERCY HOUSING/
ABODE COMMUNITIES

ENLARGED UNIT PLANS

JOB #: 2293-007

SCALE:

M3.00

BID ADDENDUM SET | DATE: 03/20/2023

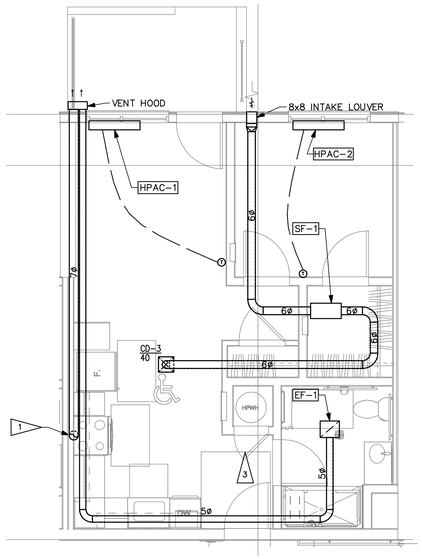

1BR SITE ADA

ENLARGED UNIT PLAN

SCALE: 1/4" = 1'-0"

3 M3.01

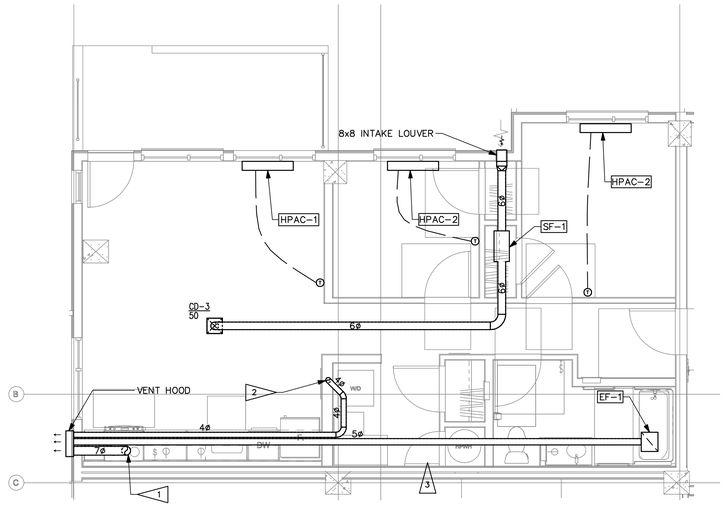

2BR SITE

ENLARGED UNIT PLAN

SCALE: 1/4" = 1'-0"

2 M3.01

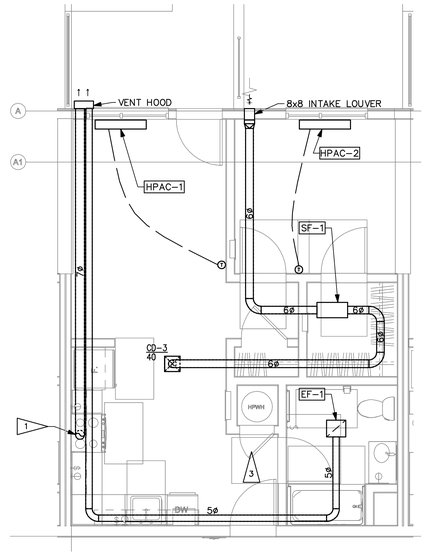

1BR SITE

ENLARGED UNIT PLAN

SCALE: 1/4" = 1'-0"

1 M3.01

FLAG NOTES:

1. POC RANGE HOOD, TRANSITION AS REQUIRED.
2. POC DRYER. DRYER CONNECTIONS SHALL BE LISTED AND LABELED PER 2019 CMC. PROVIDE BACKDRAFT DAMPER.
3. PER MANUFACTURER'S INSTALLATION GUIDE. PROVIDE FULL LOUVERED DOOR FOR WATER HEATER MAKE-UP AIR.

NOTES:

1. LAUNDRY CLOSET HAS LOUVERED DOOR FOR VENTILATION AIR TO LAUNDRY CLOSET, 100 SQ-IN MIN. OPENING IN DOOR.
2. FLEXIBLE DUCTS SHALL COMPLY WITH UL181 AND SHALL BE INSTALLED PER THE MANUFACTURE'S INSTALLATION INSTRUCTIONS AND PER SMACNA HVAC DUCT CONSTRUCTION STANDARDS PER CMC 603.5.
3. EXHAUST TERMINATIONS SHALL MAINTAIN 3' SEPARATION TO OPENINGS AND 10' SEPARATION TO MECHANICAL INTAKES.
4. RESIDENTIAL UNITS AT LEVEL 2 HPAC UNITS TO BE MOUNTED HIGHER ON WALL TO KEEP EXTERIOR EXHUAST AND INTAKE LOCATION ABOVE PODIUM PLANTER WALLS.

DRYER NOTES:

PER MANUFACTURER'S INSTALLATION INSTRUCTIONS, THE MAXIMUM LENGTH OF THE DRYER VENT IS AS FOLLOWS:

125 FEET WITH 0 ELBOW
115 FEET WITH 1 ELBOW
105 FEET WITH 2 ELBOWS
95 FEET WITH 3 ELBOWS
85 FEET WITH 4 ELBOWS

DRYER MODEL LENGTHS ARE SPECIFIED FROM ELECTROLUX ELFE7537AT CONFIRM DRYER LENGTHS IF DIFFERENT MODEL IS SPECIFIED.

EXHAUST VENT CAPS

EXHAUST VENT CAPS FOR RESIDENTIAL UNIT DRYER, BATHROOM AND RANGE EXHAUST SHALL BE ALUMINUM VENT CAPS PAINTED TO MATCH ADJACENT EXTERIOR SURFACE. REVERSOMATIC MODEL ECA OR EQUAL. VENT HOODS SHALL HAVE A 4" MINIMUM OPENING DEPTH FROM THE FACE OF THE WALL FOR PROPER OPERATION OF FANS. CONTRACTOR MAY PROVIDE ALTERNATE PRICING FOR SINGLE HOODS ENCLOSING MULTIPLE VENTS – FOR EXAMPLE, (2) 4" VENTS UNDER A COMMON HOOD, REF DETAIL 1 ON M4.01.

EXHAUST HOOD DIMENSIONS

SIZE OF DUCT(S) ø"	DIMENSION (W"xH")
4	6x6
4 & 7	14x8
4, 4 & 7	18x8

RESIDENTIAL EXHAUST DUCT SIZING

DUCT TYPE	SIZE OF DUCT(S) ø"
KITCHEN	7
BATHROOM FAN	4
DRYER	4

COUNTY OF SANTA CLARA
BUILDING INSPECTION OFFICE
PLANS APPROVED FOR PERMIT

RECORD NO.: DEV22-1242

BY: Warren Krause Date: 7/28/2023

HARD COPY OF THESE STAMPED PLANS MUST BE ON THE SITE FOR INSPECTIONS

COPYRIGHT 2023, EMERALD CITY ENGINEERS, INC.
M:\EBLANC J\2293-007 231 GRANT, PALO ALTO, CA\DWG\M301 ENLARGED UNIT PLANS.DWG 03-16-2023 10:44

VAN METER WILLIAMS POLLACK LLP
ARCHITECTURE | URBAN DESIGN ■ SAN FRANCISCO | DENVER | MINNEAPOLIS
333 Bryant Street, Suite 300, San Francisco, CA 94107 T 415.974.5252

☐ CIVIL ENGINEER
BKF - SAN JOSE
1730 N. FIRST ST. STE 600
SAN JOSE, CA 95112

☐ LANDSCAPE ARCHITECT
PLURAL STUDIO
2742 17TH STREET
SAN FRANCISCO, CA 94110

☐ STRUCTURAL ENGINEER
HOHBACH-LEWIN
250 SHERIDAN AVE STE 100
PALO ALTO, CA 94306

☐ MEP ENGINEER
EMERALD CITY ENGINEERS
21705 HIGHWAY 99
LYNWOOD, WA 98036

☐ SUSTAINABILITY/ENERGY
REDWOOD ENERGY
1887 Q STREET
ARCATA, CA 95521

EMERALD CITY ENGINEERS, INC
21705 Highway 99
Lynnwood, WA 98036
TEL: 425-741-1200

REGISTERED PROFESSIONAL ENGINEER
MASS-MAHGHAN KONSTANTINOS
No. 52668
EXP: 03-31-24
MECHANICAL
STATE OF CALIFORNIA

03/16/23

ID	DATE	NAME
1	11/11/22	PERMIT SET - CONV
A	12/16/22	BID SET
B	03/20/23	BID ADDENDUM SET
2	03/20/23	PLAN CHECK COMMENT RESPONSES SET

Project:

EDUCATOR HOUSING
231 GRANT AVENUE

231 GRANT AVENUE
PALO ALTO, CA 94306

Client:

MERCY HOUSING/
ABODE COMMUNITIES

ENLARGED UNIT PLANS

JOB #: 2293-007

SCALE:

M3.01

BID ADDENDUM SET | DATE: 03/20/2023

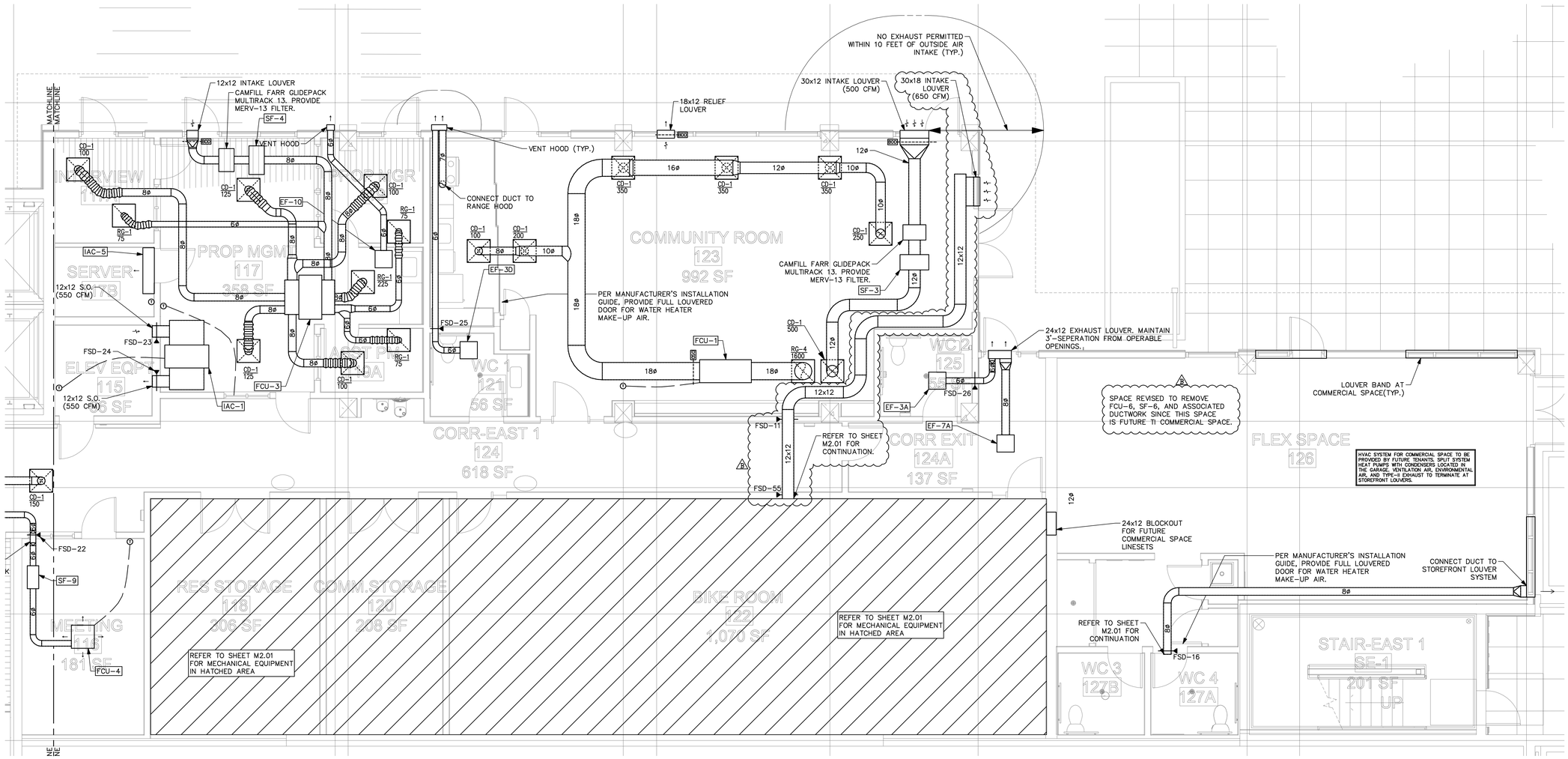

ENLARGED PLAN

SCALE: 1/4" = 1'-0"

1
M3.02

COUNTY OF SANTA CLARA
BUILDING INSPECTION OFFICE
PLANS APPROVED FOR PERMIT

RECORD NO.: DEV22-1242

BY: Warren Krause Date: 7/28/2023

HARD COPY OF THESE STAMPED PLANS MUST BE ON THE SITE FOR INSPECTIONS

COPYRIGHT 2023, EMERALD CITY ENGINEERS, INC.
M:\EBLANC J\2293-007 231 GRANT, PALO ALTO, CA\DWG\M302 ENLARGED PLANS.DWG 03-16-2023 10:15

VAN METER WILLIAMS POLLACK LLP
ARCHITECTURE | URBAN DESIGN ■ SAN FRANCISCO | DENVER | MINNEAPOLIS
333 Bryant Street, Suite 300, San Francisco, CA 94107 T 415.974.5252

☐ CIVIL ENGINEER

BKF - SAN JOSE
1730 N. FIRST ST. STE 600
SAN JOSE, CA 95112

☐ LANDSCAPE ARCHITECT

PLURAL STUDIO
2742 17TH STREET
SAN FRANCISCO, CA 94110

☐ STRUCTURAL ENGINEER

HOHBACH-LEWIN
250 SHERIDAN AVE STE 100
PALO ALTO, CA 94306

☐ MEP ENGINEER

EMERALD CITY ENGINEERS
21705 HIGHWAY 99
LYNWOOD, WA 98036

☐ SUSTAINABILITY/ENERGY

REDWOOD ENERGY
1887 Q STREET
ARCATA, CA 95521

EMERALD CITY ENGINEERS, INC
21705 Highway 99
Lynnwood, WA 98036
TEL: 425-741-1200

REGISTERED PROFESSIONAL ENGINEER
MASSAMAGHAN KONRAD
No. M 32865
EXP: 03-31-24
MECHANICAL
STATE OF CALIFORNIA

03/16/23

ID	DATE	NAME
1	11/11/22	PERMIT SET - CONV
A	12/16/22	BID SET
B	03/20/23	BID ADDENDUM SET
2	03/20/23	PLAN CHECK COMMENT RESPONSES SET

Project:

EDUCATOR HOUSING
231 GRANT AVENUE

231 GRANT AVENUE
PALO ALTO, CA 94306

Client:

MERCY HOUSING/
ABODE COMMUNITIES

ENLARGED PLANS

JOB #: 2293-007

SCALE:

M3.02

BID ADDENDUM SET | DATE: 03/20/2023

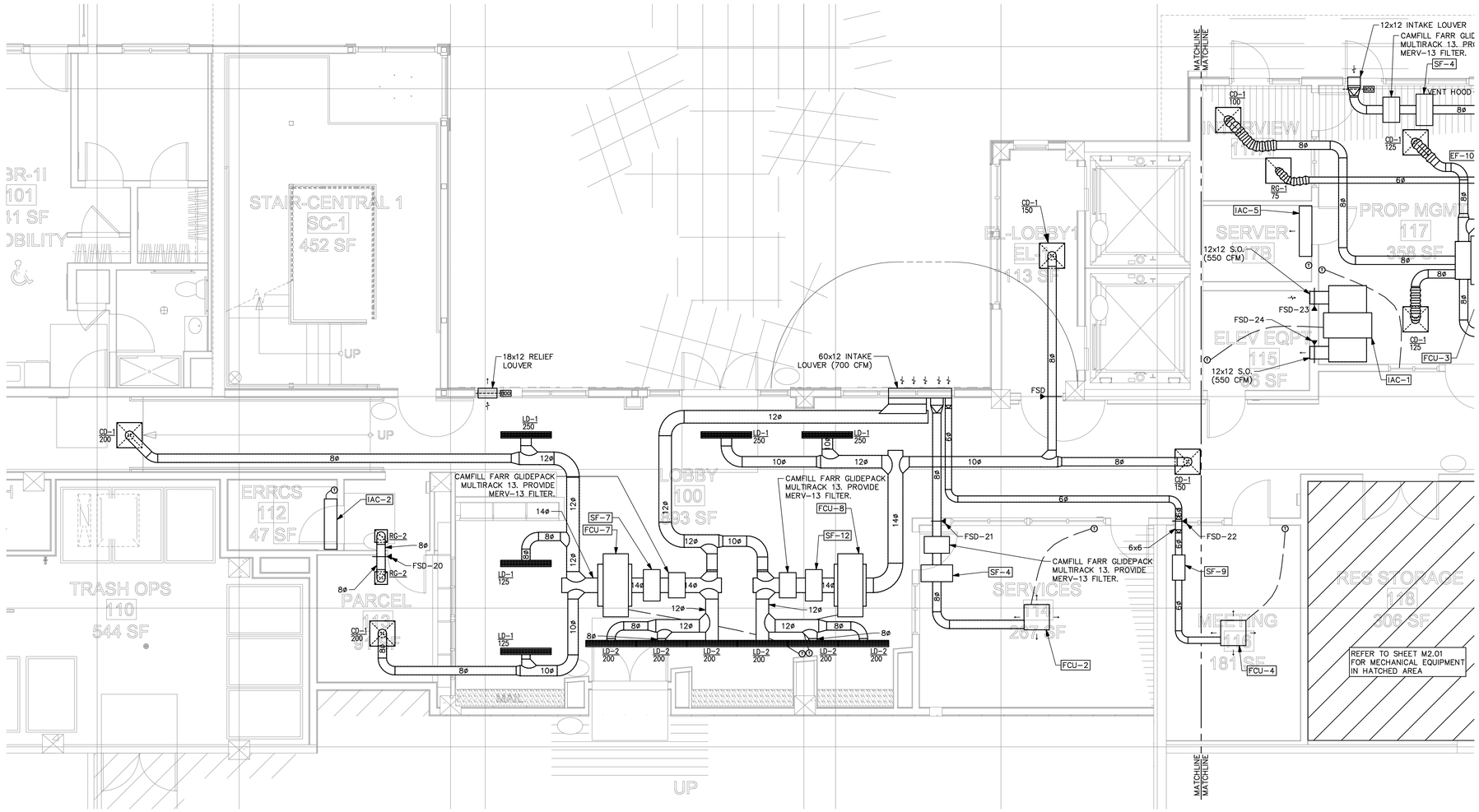

ENLARGED PLAN

SCALE: 1/4" = 1'-0"

1 / M3.03

COUNTY OF SANTA CLARA
BUILDING INSPECTION OFFICE
PLANS APPROVED FOR PERMIT

RECORD NO.: DEV22-1242

BY: Warren Kraus Date: 7/28/2023

HARD COPY OF THESE STAMPED PLANS MUST BE ON THE SITE FOR INSPECTIONS

COPYRIGHT 2023, EMERALD CITY ENGINEERS, INC.
WEEBLANC J:\2293-007 231 GRANT, PALO ALTO, CA\DWG\M303 ENLARGED PLANS.DWG 03-16-2023 10:15

VAN METER WILLIAMS POLLACK LLP
ARCHITECTURE | URBAN DESIGN ■ SAN FRANCISCO | DENVER | MINNEAPOLIS
333 Bryant Street, Suite 300, San Francisco, CA 94107 T 415.974.5252

CIVIL ENGINEER
BKF - SAN JOSE
1730 N. FIRST ST. STE 600
SAN JOSE, CA 95112

LANDSCAPE ARCHITECT
PLURAL STUDIO
2742 17TH STREET
SAN FRANCISCO, CA 94110

STRUCTURAL ENGINEER
HOHBACH-LEWIN
250 SHERIDAN AVE STE 100
PALO ALTO, CA 94306

MEP ENGINEER
EMERALD CITY ENGINEERS
21705 HIGHWAY 99
LYNWOOD, WA 98036

SUSTAINABILITY/ENERGY
REDWOOD ENERGY
1887 Q STREET
ARCATA, CA 95521

EMERALD CITY ENGINEERS, INC
21705 Highway 99
Lynnwood, WA 98036
TEL: 425-741-1200

REGISTERED PROFESSIONAL ENGINEER
MASS-MAGHAN KONRATH
No. M-38888
EXP: 03-31-24
MECHANICAL
STATE OF CALIFORNIA

03/16/23

ID	DATE	NAME
1	11/11/22	PERMIT SET - CONV
A	12/16/22	BID SET
B	03/20/23	BID ADDENDUM SET
2	03/20/23	PLAN CHECK COMMENT RESPONSES SET

Project:

EDUCATOR HOUSING
231 GRANT AVENUE

231 GRANT AVENUE
PALO ALTO, CA 94306

Client:

MERCY HOUSING/
ABODE COMMUNITIES

ENLARGED PLANS

JOB #: 2293-007

SCALE:

M3.03

BID ADDENDUM SET | DATE: 03/20/2023

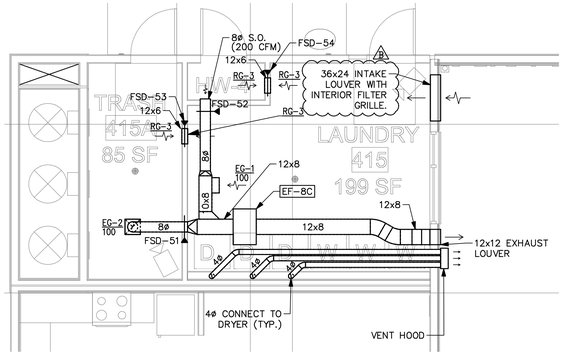

ENLARGED PLAN 3 M3.04
SCALE: 1/4" = 1'-0"

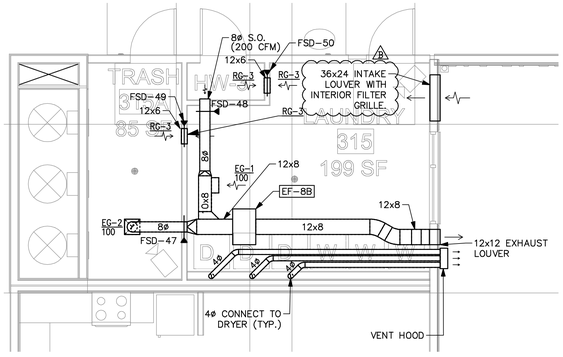

ENLARGED PLAN 2 M3.04
SCALE: 1/4" = 1'-0"

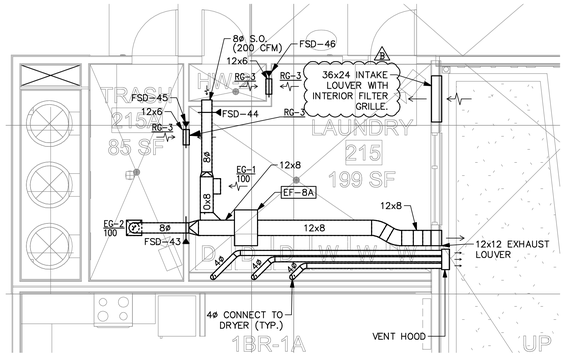

ENLARGED PLAN 1 M3.04
SCALE: 1/4" = 1'-0"

VAN METER WILLIAMS POLLACK LLP
ARCHITECTURE | URBAN DESIGN ■ SAN FRANCISCO | DENVER | MINNEAPOLIS
333 Bryant Street, Suite 300, San Francisco, CA 94107 T 415.974.5252

☐ CIVIL ENGINEER
BKF - SAN JOSE
1730 N. FIRST ST. STE 600
SAN JOSE, CA 95112

☐ LANDSCAPE ARCHITECT
PLURAL STUDIO
2742 17TH STREET
SAN FRANCISCO, CA 94110

☐ STRUCTURAL ENGINEER
HOHBACH-LEWIN
250 SHERIDAN AVE STE 100
PALO ALTO, CA 94306

☐ MEP ENGINEER
EMERALD CITY ENGINEERS
21705 HIGHWAY 99
LYNWOOD, WA 98036

☐ SUSTAINABILITY/ENERGY
REDWOOD ENERGY
1887 Q STREET
ARCATA, CA 95521

EMERALD CITY ENGINEERS, INC
21705 Highway 99
Lynnwood, WA 98036
TEL: 425-741-1200

REGISTERED PROFESSIONAL ENGINEER
MASSAMAGHAN KOV
No. 1 48 49
EXP. 03-31-24
MECHANICAL
STATE OF CALIFORNIA
03/16/23

ID	DATE	NAME
1	11/11/22	PERMIT SET - CONV
A	12/16/22	BID SET
B	03/20/23	BID ADDENDUM SET
2	03/20/23	PLAN CHECK COMMENT RESPONSES SET

Project:

EDUCATOR HOUSING
231 GRANT AVENUE

231 GRANT AVENUE
PALO ALTO, CA 94306

Client:
mercy HOUSING
abode communities
MERCY HOUSING/
ABODE COMMUNITIES

COUNTY OF SANTA CLARA
BUILDING INSPECTION OFFICE
PLANS APPROVED FOR PERMIT
RECORD NO.: DEV22-1242
BY: Warren Krause Date: 7/28/2023
HARD COPY OF THESE STAMPED PLANS MUST BE ON THE SITE FOR INSPECTIONS

ENLARGED PLANS

JOB #: 2293-007

SCALE:

M3.04

BID ADDENDUM SET | DATE: 03/20/2023

COPYRIGHT 2023, EMERALD CITY ENGINEERS, INC.
WLEBLANC J:\2293-007 231 GRANT, PALO ALTO, CA\DWG\M304 ENLARGED PLANS.DWG 03-16-2023 10:14

LEGEND		
F: _	E	ELECTRICAL CONTRACTOR
I: _	M	MECHANICAL CONTRACTOR
C: _	FA	FIRE ALARM CONTRACTOR
	CO	CARBON MONOXIDE
	- - - - -	CONTROL WIRING
	———	LINE VOLTAGE WIRING

CARBON MONOXIDE (CO) SENSOR CONTROLLER

PROVIDE COMBINATION CO SENSOR & CONTROLLER WITH LOW AND HIGH ADJUSTABLE ALARM POINT RELAYS.
–120VAC POWER SOURCE.
–DRY CONTACT ALARM RELAYS RATED FOR 5A @ 120V
–ADJUSTABLE TIME DELAYS AND ACTIVATION SETPOINTS
–ELECTROCHEMICAL CO SENSOR MOUNTED ON DEVICE
–PROVIDE AIRTEST TECHNOLOGIES #TR2000 OR EQUIVALENT
–SET TIME DELAY TO 4 MINUTES

NOTES:

1. WIRING DIAGRAM FOR GARAGE EXHAUST FANS. CONTRACTORS TO COORDINATE ALL REQUIRED WORK. DETAIL IS DIAGRAMMATIC AND WILL NEED TO BE CONFIRMED WITH THE MANUFACTURER'S SHOP DRAWING PROVIDED BY THE MECHANICAL CONTRACTOR.
2. ELECTRICAL CONTRACTOR SHALL PROVIDE CONDUIT FOR CO SYSTEM. ROUTE CONDUIT WITHIN CONCRETE SLAB WHERE POSSIBLE. CONFIRM ALL LOCATION AND CONDUIT PATHWAY WITH MECHANICAL.
3. REFER TO MECHANICAL PLANS FOR SEQUENCE OF OPERATION FOR FANS + PPM SETTINGS
4. REFER TO MECHANICAL PLANS FOR CO SENSOR/CONTROLLER LOCATIONS.
5. SYSTEM TO MEET THE REQUIREMENTS OF CMC 403.7.2 EXCEPTION 2, SYSTEM IS TO NOT HAVE ANY STROBES OR HORNS AS THIS IS NOT A CBC 915 CARBON MONOXIDE DETECTION SYSTEM (GARAGE IS EXEMPT), NO INTERCONNECTION TO FACP IS REQUIRED BY CODE.

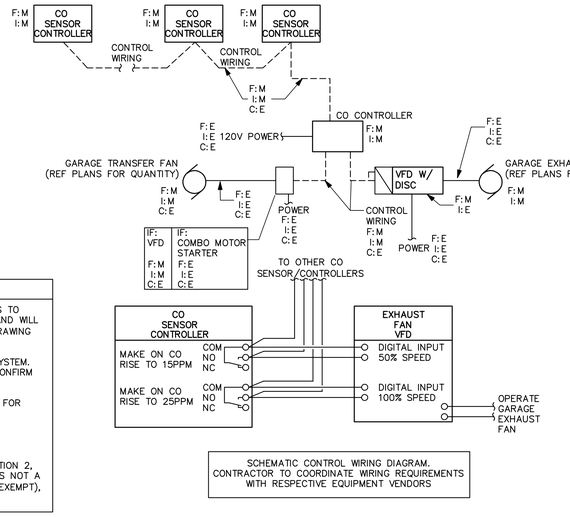

SCHEMATIC CONTROL WIRING DIAGRAM. CONTRACTOR TO COORDINATE WIRING REQUIREMENTS WITH RESPECTIVE EQUIPMENT VENDORS

GARAGE EXHAUST FAN WIRING DIAGRAM

DETAIL

SCALE: NONE

5 / M4.00

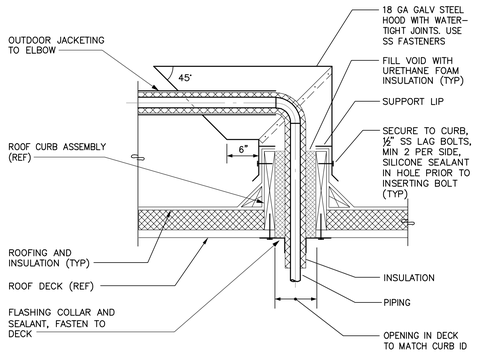

PIPE PENETRATION THROUGH ROOF

DETAIL

SCALE: NONE

6 / M4.00

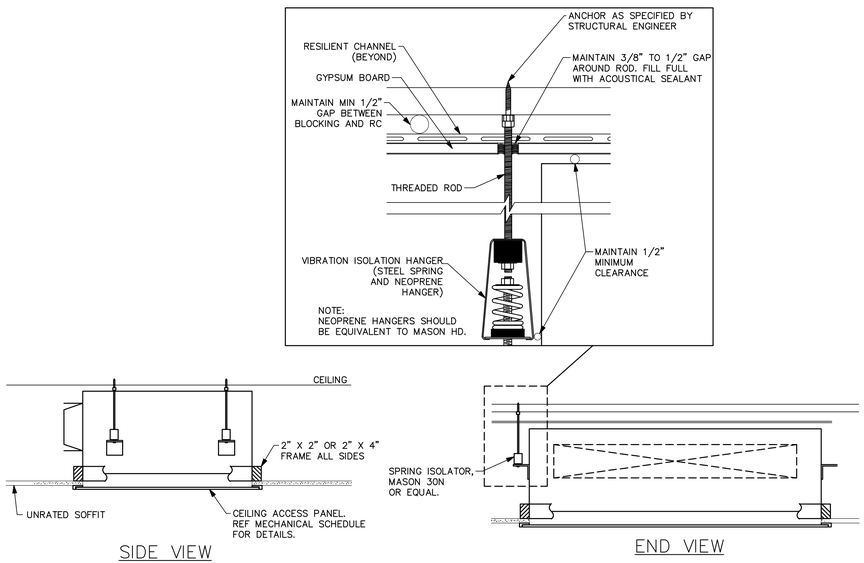

FAN COIL UNIT MOUNTING

DETAIL

SCALE: NONE

7 / M4.00

COPYRIGHT 2023, EMERALD CITY ENGINEERS, INC.
M:\EB\ANC J:\2293-007 231 GRANT, PALO ALTO, CA\DWG\M400 DETAILS & DIAGRAMS.DWG 03-16-2023 10:14

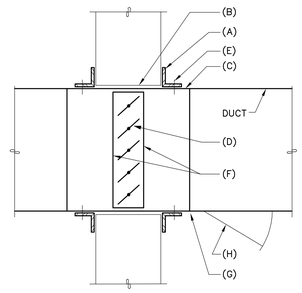

NOTES:
(A) RETAINING ANGLES, LAP OPENING 1" MINIMUM AND COVER CORNERS OF OPENING.
(B) CLEARANCE BETWEEN WALL AND SLEEVE BOTH DIMENSIONS.
(C) STEEL SLEEVE.
(D) APPROVED COMBINATION FIRE/SMOKE DAMPER.
(E) SECURE RETAINING ANGLES TO SLEEVE ONLY.
(F) SECURE DAMPER TO SLEEVE.
(G) CONNECT DUCT TO SLEEVE WITH BREAK–AWAY CONNECTION (TYP).
(H) ACCESS DOOR, SIZE TO MEET AHJ REQUIREMENTS (6x6 MINIMUM).

1. COMPLY WITH SMACNA FSRDIG AND MANUFACTURER'S INSTRUCTIONS.
2. DAMPER FREE AREA SHALL BE MINIMUM 90% OF AREA OF CONNECTING DUCT. INCREASE DAMPER SIZE AND PROVIDE TRANSITIONS TO CONNECTING DUCTS AS NECESSARY TO MEET THIS REQUIREMENT.
3. DAMPER SHALL BE PROVIDED WITH AN APPROVED MEANS OF ACCESS AND PERMANENTLY IDENTIFIED ON THE EXTERIOR, PER CMC 605.5.
4. FIRE DAMPERS SHALL BE INSTALLED IN ACCORDANCE WITH THE MANUFACTURE'S INSTALLATION INSTRUCTIONS AND SHALL BE AVAILABLE IF REQUESTED BY THE CITY INSPECTOR AT THE JOBSITE, PER CMC 605.2.

FIRE/SMOKE DAMPER NOTES:
1. LOCATION OF SMOKE DETECTOR: FULL–COVERAGE SYSTEM. SEE FIRE ALARM DRAWINGS.
2. SMOKE CONTROL NARRATIVE: SEE FIRE ALARM DRAWINGS.
3. SEQUENCE OF OPERATION:
   A. DAMPER NORMALLY CLOSED, HELD OPEN BY POWER.
   B. IF SMOKE OR EXCESS HEAT IS DETECTED IN THE AIR DUCT, DAMPER SHALL CLOSE AND RTU/FAN SHALL SHUT DOWN.
   C. IF POWER IS INTERRUPTED, DAMPER SHALL FAIL CLOSED.
4. DETECTOR BY OTHERS. SEE FIRE ALARM DRAWINGS.
5. FSD SHALL BE GREENHECK MODEL FSD–211 UL 555S GRILLE–ACCESS COMBINATION FIRE/SMOKE DAMPER WITH ELECTRIC FUSE LINK ACTUATOR.
6. OPERATING TEMPERATURE OF ACTUATOR SHALL BE 165 DEGREES F.
7. OVERRIDE SWITCH: NOT APPLICABLE – NO SECTION 909 SMOKE CONTROL SYSTEM IN THIS PROJECT.
8. DAMPER ACTUATOR SHALL BE INTERLOCKED WITH RTU/FAN TO CLOSE DAMPER WHEN FAN SHUTS DOWN.
9. DAMPER SHALL BE NORMALLY CLOSED, AND SHALL FAIL CLOSED WHEN POWER IS CUT.

COMBINATION FIRE/SMOKE DAMPER INSTALLATION

DETAIL

SCALE: NONE

1 / M4.00

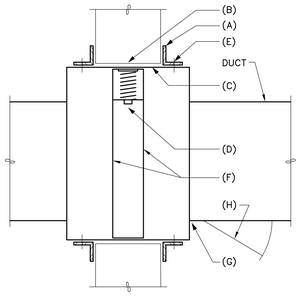

NOTES:
(A) RETAINING ANGLES, LAP OPENING 1" MINIMUM AND COVER CORNERS OF OPENING.
(B) CLEARANCE BETWEEN WALL AND SLEEVE.
(C) STEEL SLEEVE.
(D) APPROVED FIRE DAMPER (CURTAIN OR BLADE TYPE).
(E) SECURE RETAINING ANGLES TO SLEEVE ONLY.
(F) SECURE DAMPER TO SLEEVE.
(G) CONNECT DUCT TO SLEEVE WITH BREAK–AWAY CONNECTION (TYP).
(H) ACCESS DOOR, SIZE TO MEET AHJ REQUIREMENTS (6x6 MINIMUM).

1. COMPLY WITH SMACNA FSRDIG AND MANUFACTURER'S INSTRUCTIONS.
2. DAMPER FREE AREA SHALL BE MINIMUM 90% OF AREA OF CONNECTING DUCT. INCREASE DAMPER SIZE AND PROVIDE TRANSITIONS TO CONNECTING DUCTS AS NECESSARY TO MEET THIS REQUIREMENT.

FIRE DAMPER INSTALLATION

DETAIL

SCALE: NONE

2 / M4.00

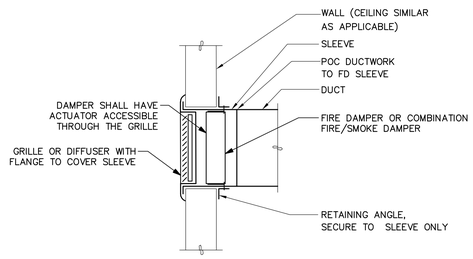

FIRE/SMOKE DAMPER NOTES:
1. LOCATION OF SMOKE DETECTOR: FULL–COVERAGE SYSTEM. SEE FIRE ALARM DRAWINGS.
2. SMOKE CONTROL NARRATIVE: SEE FIRE ALARM DRAWINGS.
3. SEQUENCE OF OPERATION:
   A. DAMPER NORMALLY CLOSED, HELD OPEN BY POWER.
   B. IF SMOKE OR EXCESS HEAT IS DETECTED IN THE AIR DUCT, DAMPER SHALL CLOSE AND RTU/FAN SHALL SHUT DOWN.
   C. IF POWER IS INTERRUPTED, DAMPER SHALL FAIL CLOSED.
4. DETECTOR BY OTHERS. SEE FIRE ALARM DRAWINGS.
5. FSD SHALL BE GREENHECK MODEL OFSD–211 UL 555S GRILLE–ACCESS COMBINATION FIRE/SMOKE DAMPER WITH ELECTRIC FUSE LINK ACTUATOR.
6. OPERATING TEMPERATURE OF ACTUATOR SHALL BE 165 DEGREES F.
7. OVERRIDE SWITCH: NOT APPLICABLE – NO SECTION 909 SMOKE CONTROL SYSTEM IN THIS PROJECT.
8. DAMPER ACTUATOR SHALL BE INTERLOCKED WITH RTU/FAN TO CLOSE DAMPER WHEN FAN SHUTS DOWN.
9. DAMPER SHALL BE NORMALLY CLOSED, AND SHALL FAIL CLOSED WHEN POWER IS CUT.

DAMPER INSTALLATION AT GRILLE OR DIFFUSER

DETAIL

SCALE: NONE

3 / M4.00

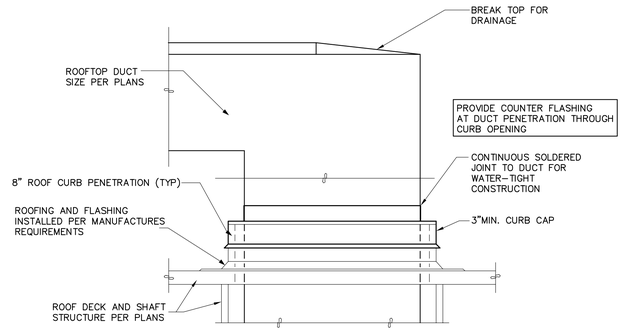

COUNTY OF SANTA CLARA
BUILDING INSPECTION OFFICE
PLANS APPROVED FOR PERMIT
RECORD NO.: DEV22-1242
BY: Warren Krause Date: 7/28/2023
HARD COPY OF THESE STAMPED PLANS MUST BE ON THE SITE FOR INSPECTIONS

DUCT PENETRATION THROUGH ROOF

DETAIL

SCALE: NONE

4 / M4.00

VAN METER WILLIAMS POLLACK LLP
ARCHITECTURE | URBAN DESIGN | SAN FRANCISCO | DENVER | MINNEAPOLIS
333 Bryant Street, Suite 300, San Francisco, CA 94107 T 415.974.5252

☐ CIVIL ENGINEER
BKF - SAN JOSE
1730 N. FIRST ST. STE 600
SAN JOSE, CA 95112

☐ LANDSCAPE ARCHITECT
PLURAL STUDIO
2742 17TH STREET
SAN FRANCISCO, CA 94110

☐ STRUCTURAL ENGINEER
HOHBACH-LEWIN
250 SHERIDAN AVE STE 100
PALO ALTO, CA 94306

☐ MEP ENGINEER
EMERALD CITY ENGINEERS
21705 HIGHWAY 99
LYNWOOD, WA 98036

☐ SUSTAINABILITY/ENERGY
REDWOOD ENERGY
1887 Q STREET
ARCATA, CA 95521

EMERALD CITY ENGINEERS, INC
21705 Highway 99
Lynnwood, WA 98036
TEL: 425-741-1200

REGISTERED PROFESSIONAL ENGINEER
MASS/MAGHAN KOHLHAAS
No. 52668
EXP: 03-31-24
MECHANICAL
STATE OF CALIFORNIA

03/16/23

ID	DATE	NAME
1	11/11/22	PERMIT SET - CONV
A	12/16/22	BID SET
B	03/20/23	BID ADDENDUM SET
2	03/20/23	PLAN CHECK COMMENT RESPONSES SET

Project:

EDUCATOR HOUSING
231 GRANT AVENUE

231 GRANT AVENUE
PALO ALTO, CA 94306

Client:
mercy HOUSING
abode communities
MERCY HOUSING/
ABODE COMMUNITIES

DETAILS & DIAGRAMS

JOB #: 2293-007

SCALE:

M4.00

BID ADDENDUM SET | DATE: 03/20/2023

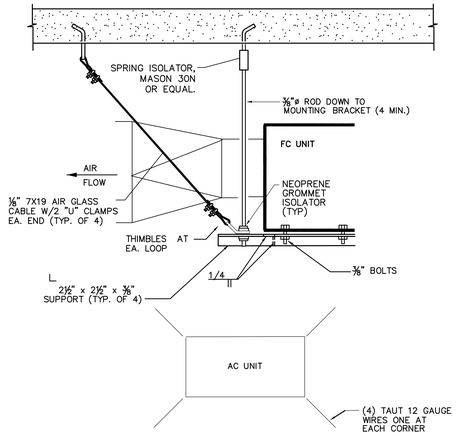

PROVIDE CABLES ONLY FOR UNITS SUSPENDED MORE THAN 2 INCHES BELOW SLAB.

FAN COIL UNIT MOUNTING

DETAIL 5 / M4.01

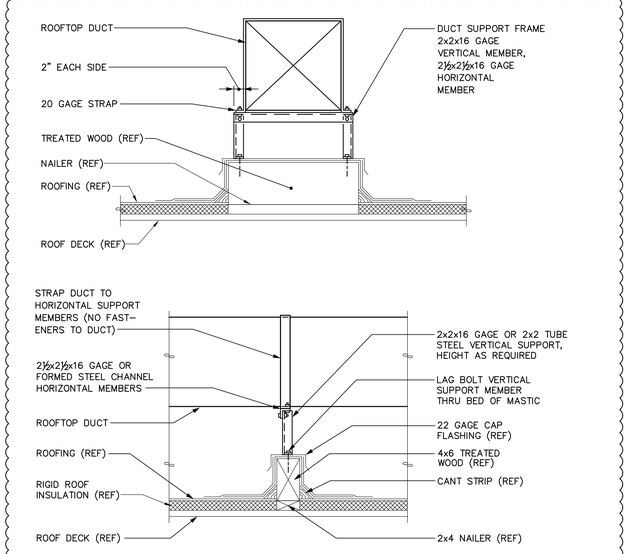

ROOFTOP DUCT SUPPORT

DETAIL 4 / M4.01

SCALE: NONE

NOTE:
VENT HOODS SHALL HAVE A 4" MINIMUM OPENING DEPTH FROM THE FACE OF THE WALL FOR PROPER OPERATION OF FANS.

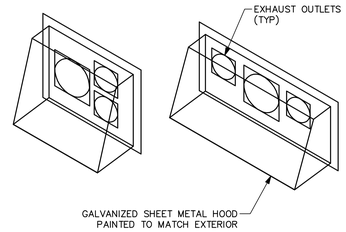

EXHAUST HOOD

DETAIL 1 / M4.01

SCALE: NONE

THE TERMINATION POINT SHALL BE 30 FEET FROM PROPERTY LINES, 10 FEET FROM OPENINGS INTO THE BUILDING, 6 FEET FROM EXTERIOR WALLS OR ROOFS, 10 FEET FROM COMBUSTIBLE WALLS OR OPENINGS INTO THE BUILDING THAT ARE IN THE DIRECTION OF THE EXHAUST DISCHARGE, AND 10 FEET ABOVE GRADE.

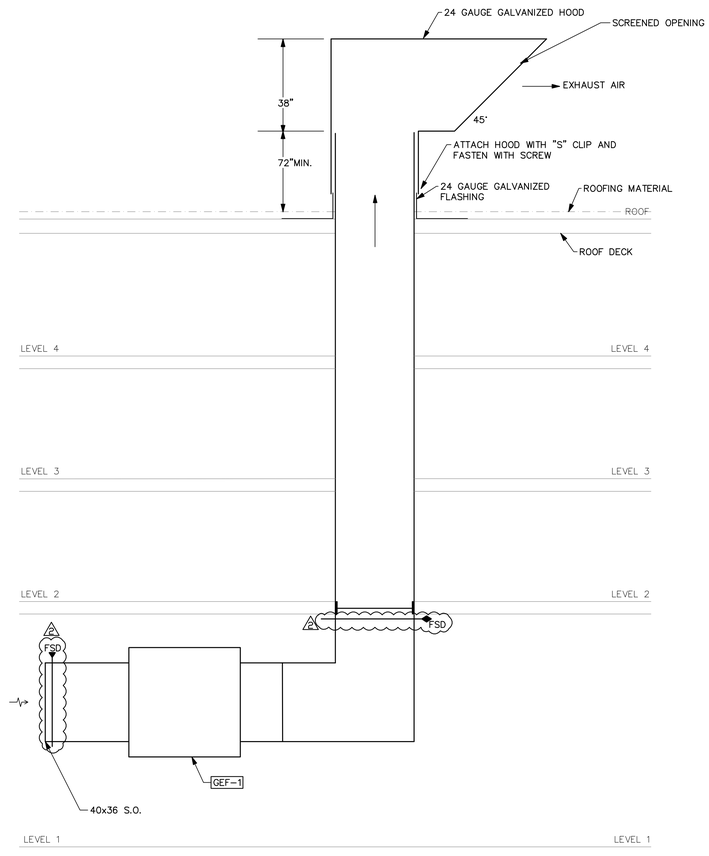

GARAGE EXHAUST DUCT RISER DIAGRAMS

DETAIL 6 / M4.01

SCALE: NONE

NOTE:
SUSPEND CONDENSER FROM CEILING ON TRAPEZE TYPE MOUNT SECURED TO FEET OF UNIT. MOUNT 12" FROM WALL. MOUNT USING 2 SECTIONS OF 1⅝" UNI-STRUT SECURED TO CEILING WITH 4 HILTI TYPE ANCHORS. SUSPEND CONDENSERS WITH ALL-THREAD ATTACHED TO UNI-STRUT WITH STRUT NUTS. PROVIDE BASKET SPRING ISOLATORS WITH SIESMIC RATED SPRINGS.

GARAGE HEAT PUMP MOUNTING

DETAIL 2 / M4.01

SCALE: NONE

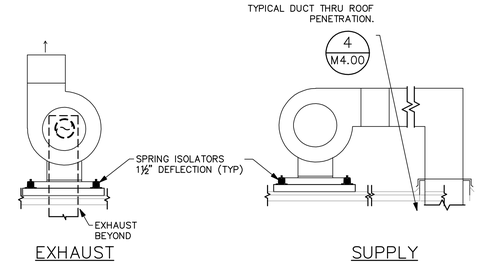

NOTES:
1. PROVIDE FLEXIBLE DUCT CONNECTIONS TO FANS.

UTILITY FAN MOUNTING

DETAIL 3 / M4.01

SCALE: NONE

COUNTY OF SANTA CLARA
BUILDING INSPECTION OFFICE
PLANS APPROVED FOR PERMIT
RECORD NO.: DEV22-1242
BY: Warren Krause Date: 7/28/2023
HARD COPY OF THESE STAMPED PLANS MUST BE ON THE SITE FOR INSPECTIONS

COPYRIGHT 2023, EMERALD CITY ENGINEERS, INC.
M:\EBLANC J:\2293-007 231 GRANT, PALO ALTO, CA\DWG\M401 DETAILS & DIAGRAMS.DWG 03-16-2023 10:14

VAN METER WILLIAMS POLLACK LLP
ARCHITECTURE | URBAN DESIGN ■ SAN FRANCISCO | DENVER | MINNEAPOLIS
333 Bryant Street, Suite 300, San Francisco, CA 94107 T 415.974.5252

☐ CIVIL ENGINEER
BKF - SAN JOSE
1730 N. FIRST ST. STE 600
SAN JOSE, CA 95112

☐ LANDSCAPE ARCHITECT
PLURAL STUDIO
2742 17TH STREET
SAN FRANCISCO, CA 94110

☐ STRUCTURAL ENGINEER
HOHBACH-LEWIN
250 SHERIDAN AVE STE 100
PALO ALTO, CA 94306

☐ MEP ENGINEER
EMERALD CITY ENGINEERS
21705 HIGHWAY 99
LYNWOOD, WA 98036

☐ SUSTAINABILITY/ENERGY
REDWOOD ENERGY
1887 Q STREET
ARCATA, CA 95521

EMERALD CITY ENGINEERS, INC
21705 Highway 99
Lynnwood, WA 98036
TEL: 425-741-1200

REGISTERED PROFESSIONAL ENGINEER
MASSAMAGHAN KOHANTER
No. M 29825
EXP. 03-31-24
MECHANICAL
STATE OF CALIFORNIA

03/16/23

ID	DATE	NAME
1	11/11/22	PERMIT SET - CONV
A	12/16/22	BID SET
B	03/20/23	BID ADDENDUM SET
2	03/20/23	PLAN CHECK COMMENT RESPONSES SET

Project:

EDUCATOR HOUSING
231 GRANT AVENUE

231 GRANT AVENUE
PALO ALTO, CA 94306

Client:

MERCY HOUSING/
ABODE COMMUNITIES

DETAILS & DIAGRAMS

JOB #: 2293-007

SCALE:

M4.01

BID ADDENDUM SET | DATE: 03/20/2023

LEGEND

ACU	AIR CONDITIONING UNIT
AFF	ABOVE FINISHED FLOOR
AHJ	AUTHORITY HAVING JURISDICTION
AHU	AIR HANDLING UNIT
BDD	BACKDRAFT DAMPER
BHP	BRAKE HORSEPOWER
BTUH	BRITISH THERMAL UNIT PER HOUR
C	COMMON
CAP	CAPACITY
CC	COOLING COIL
CD	CEILING DIFFUSER
CFM	CUBIC FEET PER MINUTE
CLG	CEILING, COOLING
CO	CLEANOUT
COMB	COMBUSTION
CONT	CONTINUE, CONTROL
CONTR	CONTRACTOR
COP	COEFFICIENT OF PERFORMANCE
COTG	CLEANOUT TO GRADE
CWS	CHILLED WATER SUPPLY
CWR	CHILLED WATER RETURN
D	DIAMETER
DB	DRY BULB, DECIBEL
DEG	DEGREE
DIM	DIMENSION
DISCH	DISCHARGE
DN	DOWN
EA	EXHAUST AIR
EAT	ENTERING AIR TEMPERATURE
EER	ENERGY EFFICIENCY RATIO
EF	EXHAUST FAN
EFF	EFFICIENCY
EG	EXHAUST GRILLE, ENGINE GENERATOR
ELEC	ELECTRIC
EQUIV	EQUIVALENT
ESP	EXTERNAL STATIC PRESSURE
EXH	EXHAUST
EXT	EXTERIOR, EXTERNAL
F	FAHRENHEIT
FD	FIRE DAMPER
FCU	FAN COIL UNIT
FLR	FLOOR
FPM	FEET PER MINUTE
FPS	FEET PER SECOND
FSD	FIRE/SMOKE DAMPER
G	GAS
GRD	GRILLES, REGISTERS, AND DIFFUSERS
GWB	GYPSUM WALLBOARD
HORIZ	HORIZONTAL
HP	HORSEPOWER, HEAT PUMP
HRU	HEAT RECOVERY UNIT
HVAC	HEATING, VENTILATING, AND AIR CONDITIONING
HVU	HEATING AND VENTILATION UNIT
HWR	HIGH WALL RETURN, HOT WATER RETURN
HWS	HIGH WALL SUPPLY, HOT WATER SUPPLY
HX	HEAT EXCHANGER
ID	INDIRECT DRAIN, INSIDE DIAMETER
IN	INCH
KW	KILOWATT
L	LONG, LENGTH
LB	POUND
LWR	LOW WALL RETURN
LWS	LOW WALL SUPPLY
MBH	THOUSAND BTU PER HOUR
MECH	MECHANICAL
MCA	MINIMUM CIRCUIT AMPACITY
MOCP	MAXIMUM OVER CURRENT PROTECTION
MTD	MOUNTED
OSA	OUTDOOR AIR
OBD	OPPOSED BLADE DAMPER
OD	OUTSIDE DIMENSION OR DIAMETER
OPNG	OPENING
P	PUMP
PD	PUMPED DRAIN, PRESSURE DROP
PW	PUMPED WASTE
POC	POINT OF CONNECTION
PRV	PRESSURE REDUCING VALVE
PSIG	POUNDS PER SQUARE INCH GAUGE
RA	RETURN AIR
REF	REFERENCE
RF	RELIEF FAN
RG	RETURN GRILLE
RPM	REVOLUTIONS PER MINUTE
SA	SUPPLY AIR
SCH	SCHEDULE
SF	SUPPLY FAN, SQUARE FOOT
SENS	SENSIBLE
SG	SUPPLY GRILLE
SMACNA	SHEET METAL AND AIR CONDITIONING CONTRACTORS NATIONAL ASSOCIATION
SO	SCREENED OPENING
SP	STATIC PRESSURE
SS	STAINLESS STEEL, SANITARY SEWER
SQ	SQUARE
TP	TRAP PRIMER
TG	TRANSFER GRILLE
TYP	TYPICAL
UH	UNIT HEATER
UON	UNLESS OTHERWISE NOTED
V	VENT
VENT	VENTILATION, VENTILATOR
VTR	VENT THRU ROOF
W	WASTE, WATT, WIDE
WB	WET BULB (TEMPERATURE)

EQUIPMENT

EF-1	TYPICAL EQUIPMENT DESIGNATION (EXHAUST FAN SHOWN)

GENERAL

- ARCHITECTURAL BACKGROUND (THIN LINE)
- NEW MECHANICAL WORK (HEAVY LINE)
- MATCHLINE OR PROPERTY LINE

SECTION INDENTIFICATION (DETAIL SIMILAR)

- INDICATES DIRECTION OF CUTTING PLANE
- LETTER INDICATES SECTION (NO. INDICATES DETAIL) — A, M-3
- SHEET # WHERE SECTION IS DRAWN
- SHEET # WHERE SECTION IS TAKEN

PIPING

CD	CONDENSATE DRAINAGE
G	NATURAL GAS – STANDARD PRESSURE
MPG	NATURAL GAS – MEDIUM PRESSURE
	WASTE (W)
PW	PUMPED WASTE (PW)
RL	RAIN LEADER (RL)
CRL	COMBINED RAIN LEADER (CRL)
OL	OVERFLOW RAIN LEADER (OL)
PD	PUMPED DRAIN (PD)
	VENT (V)
	COLD WATER (CW)
	HOT WATER, POTABLE, 120°F
140F	HOT WATER, POTABLE, TEMPERATURE OTHER THAN 120°F
	HOT WATER CIRCULATING (HWC), POTABLE, 120°F
140F	HOT WATER CIRCULATING (HWC), POTABLE, TEMPERATURE OTHER THAN 120°F
FOF	FUEL OIL FILL
FOS	FUEL OIL SUPPLY
FOR	FUEL OIL RETURN
FOV	FUEL OIL VENT
RV	RELIEF VENT
IRR	IRRIGATION
TP	TRAP PRIMER (TP)
	PIPE CAP
	PIPE PLUG
	UNION
	FLANGE
	GATE VALVE OR BALL VALVE
	BALL VALVE
	PRESSURE REDUCING VALVE (PRV)
	BREAK IN PIPING OR DUCTWORK
	CHECK VALVE
	BALANCING/MEASURING VALVE
ID	INDIRECT DRAIN, PIPE TO DRAIN
	GLOBE VALVE
	BUTTERFLY VALVE
	WYE STRAINER
	WYE STRAINER WITH CAPPED HOSE END BLOWDOWN VALVE
	AUTOMATIC CONTROL VALVE, 2–WAY
	AUTOMATIC CONTROL VALVE, 3–WAY
ID	RELIEF VALVE
RPBP	REDUCED PRESSURE BACKFLOW PREVENTER
DCVA	DOUBLE CHECK VALVE ASSEMBLY
	FLOOR DRAIN
	HOSE BIBB
	PIPE ALIGNMENT GUIDE
	FLEXIBLE CONNECTION IN PIPING
PS	PIPE SUPPORT
A	PIPE ANCHOR
	PRESSURE GAGE
	THERMOMETER
P/T	PRESSURE / TEMPERATURE TEST PORT
	VALVE STATION OR ASSEMBLY
	PUMP
##	WASTE/VENT RISER CALLOUT
*	CONDENSATE RISER
*	CONDENSATE RISER CALLOUT

COPYRIGHT 2023, EMERALD CITY ENGINEERS, INC.
KSTEPHENS J:\2293-007 231 GRANT, PALO ALTO, CA\DWG\P000.DWG 05-30-2023 16:07

GENERAL NOTES

GENERAL NOTES – MECHANICAL

1. REFERENCE TO RELATED WORK: "REF" INDICATIONS DENOTE WORK COVERED ELSEWHERE (ARCHITECTURAL, STRUCTURAL, CIVIL, ELECTRICAL, LANDSCAPE, OR KITCHEN), OR ITEM BASED ON A SPECIFIC MANUFACTURER'S DIMENSIONS (VERIFY).
2. ELECTRICAL CHARACTERISTICS: REFER TO ELECTRICAL DRAWINGS FOR ELECTRICAL CHARACTERISTICS (VOLTAGES, ETC. OF MECHANICAL EQUIPMENT, UNLESS OTHERWISE INDICATED.
3. CODES: COMPLETE INSTALLATION OF THE MECHANICAL SYSTEM SHALL BE PER THE APPLICABLE BUILDING, MECHANICAL, ENERGY, PLUMBING, FIRE, AND HEALTH CODES AND REGULATIONS AS ADOPTED BY THE LOCAL AHJ.
4. PREPARE AND SUBMIT FOR REVIEW A SHOP DRAWING BASED ON FINAL STRUCTURAL SHOP DRAWINGS FOR LOCATING AND ROUTING ALL DUCTWORK, DAMPERS, EQUIPMENT, PIPING, ETC.
   A. COORDINATE FLOOR AND BEAM PENETRATIONS WITH STRUCTURAL.
   B. COORDINATE FINAL LOCATION AND ROUTING WITH CEILING, LIGHTS, WALLS, FIRE SPRINKLER PIPING, AND OTHER TRADES WORK.
   C. INCLUDE ADDITIONAL OFFSETS, ELBOWS, ROUTING, EQUIVALENT DUCT SIZING EXCHANGE, RELOCATING, ETC. AS REQUIRED FOR A COMPLETE OPERATING MECHANICAL SYSTEM.
   D. PROVIDE SHOP DRAWINGS AT NO ADDITIONAL COST TO THE OWNER.
5. MECHANICAL CONTRACTOR SHALL LOCATE AND COORDINATE EXACT LOCATION OF ALL MECHANICAL EQUIPMENT WITHIN THE STRUCTURE.
6. ACCESS DOORS: COORDINATE WITH ARCHITECT AND LOCATE ALL ACCESS DOORS ON SHOP DRAWINGS PRIOR TO BEGINNING OF CONSTRUCTION. ACCESS DOORS IN FIRE RATED STRUCTURE SHALL BE FIRE RATED. VERIFY ACCESS DOOR LOCATIONS WITH GENERAL CONTRACTOR PRIOR TO BIDDING.
7. RATED PENETRATION: DUCT PENETRATIONS THROUGH RATED ENCLOSURES SHALL BE FIRE/SMOKE DAMPERED PER THE LATEST EDITION OF THE UNDERWRITERS LABORATORIES(UL) FIRE RESISTANCE WITH HOURLY RATINGS FOR THROUGH–PENETRATION FIRE STOPS SYSTEM VOLUME #2, OR SHALL BE INSTALLED IN STRICT ACCORDANCE WITH THE MANUFACTURER'S UL LISTINGS (3M OR EQUIVALENT). DETERMINE REQUIREMENTS WITH GENERAL CONTRACTOR PRIOR TO BID.
8. ROOF PENETRATIONS: SEE ARCHITECTURAL DRAWINGS FOR ROOF CAP, ROOF CURB, ROOF DRAIN, AND VTR DETAILS.
9. EXPOSED PIPING: PROVIDE CHROME PLATING FOR EXPOSED PIPING IN FINISHED ROOMS.
10. PENETRATIONS: PROVIDE ESCUTCHEON PLATES FOR EXPOSED PIPING PENETRATIONS AND SHEET METAL FLASHING FOR EXPOSED DUCTWORK PENETRATIONS.
11. SHAFT AND PLENUM CONNECTIONS: SEAL CONNECTIONS TO AIR SHAFTS AIRTIGHT. PROVIDE AIRTIGHT SEAL AROUND PENETRATIONS IN AIR PLENUMS.
12. LIGHT FIXTURE CLEARANCE: COORDINATE LOCATIONS OF MECHANICAL WORK TO PROVIDE CLEARANCES OVER LIGHTING FIXTURES FOR REMOVAL AND REPLACEMENT.
13. CABLE TRAYS: DUCTWORK AND PIPING INSTALLED ADJACENT TO ELECTRICAL CABLE TRAYS SHALL ALLOW MINIMUM ACCESS OF 6" ABOVE AND TO THE SIDE OF CABLE TRAYS.
14. MOTORS: COMPLY WITH ENERGY CODE ENFORCED BY AHJ FOR MINIMUM EFFICIENCIES UNDER FULL LOAD.
15. ACCESS CLEARANCES FOR MAINTENANCE AND REPLACEMENT: VERIFY PHYSICAL DIMENSIONS OF EQUIPMENT TO ENSURE THAT ACCESS CLEARANCES CAN BE MET. COORDINATE LOCATIONS OF MECHANICAL WORK AND WORK OF OTHER TRADES TO PROVIDE ACCESS CLEARANCES FOR SERVICE AND MAINTENANCE.

COORDINATION REQUIREMENTS

1. PIPING: COORDINATE WITH STRUCTURAL FOR EXACT LOCATION OF ALL STRUCTURAL FRAMING AND FOOTINGS AND FINALIZE THE EXACT ROUTING OF ALL PIPES WITH STRUCTURAL AND AT THE SITE PRIOR AND DURING THE CONSTRUCTION.
2. ADJUSTMENTS: ALL EQUIPMENT, MOTORS, FANS GAS BURNERS, IGNITION DEVICES, DRIVES, ETC. SHALL BE ADJUSTED AND BALANCED TO OPERATE AT SPECIFIED RATINGS AS REQUIRED FOR THIS PROJECT SITE AND ACCOUNTING FOR ELEVATION ABOVE SEA LEVEL.
3. APPROVALS: MECHANICAL AND PLUMBING EQUIPMENT SHALL BE APPROVED FOR INSTALLATION IN THE PROJECT LOCATION AND SHALL HAVE ALL CERTIFICATIONS AND RATINGS TO MEET ALL ENERGY, POLLUTION, ENVIRONMENTAL, SEISMIC, ETC. CODES AND REGULATIONS. THE CONTRACTOR SHALL COORDINATE WITH HIS MANUFACTURE SUPPLIERS AND SHALL INCLUDE ALL COSTS REQUIRED TO MEET THESE REQUIREMENTS IN HIS BID.
4. FIRE PROTECTION: CONTRACTOR SHALL PROVIDE A FULLY DESIGNED FIRE PROTECTION SPRINKLER SYSTEM IN COMPLIANCE WITH NFPA AND LOCAL CODES. PROVIDE DESIGN, PERMITS, MATERIALS, INSTALLATION, TESTING AND ALL OTHER FOR A FULLY OPERATIONAL SYSTEM. LOCATION OF ALL PIPING TO BE COORDINATED WITH OTHER TRADES.

> DRAWINGS ARE DIAGRAMMATIC, SHOWING THE GENERAL LOCATION, TYPE, LAYOUT, AND EQUIPMENT REQUIRED. THE DRAWINGS SHALL NOT BE SCALED FOR EXACT MEASUREMENT. REFER TO ARCHITECTURAL DRAWINGS FOR DIMENSIONS. REFER TO MANUFACTURER'S STANDARD INSTALLATION DRAWINGS FOR EQUIPMENT CONNECTIONS AND INSTALLATION REQUIREMENTS. PROVIDE DUCTWORK, CONNECTIONS, ACCESSORIES, OFFSETS, AND MATERIALS NECESSARY FOR A COMPLETE SYSTEM.

COORDINATION REQUIREMENTS

1. IRRIGATION: COORDINATE WITH IRRIGATION CONTRACTOR FOR THEIR WATER SUPPLY REQUIREMENTS AND LOCATIONS.
2. GAS: CONTRACTOR/GAS COMPANY SHALL FINALIZE GAS METER AND GAS SERVICE LOCATIONS.
3. UTILITIES: COORDINATE WITH SITE UTILITY CONTRACTOR AND CIVIL DRAWINGS FOR UTILITY CONNECTIONS AND EXTENSIONS.
4. ROOF DRAINAGE: COORDINATE WITH GENERAL CONTRACTOR FOR ROOF DRAIN AND OVERFLOWS, SCUPPER DRAINS, AND CONDENSATE DRAINS.
5. PLUMBING FIXTURES: COORDINATE WITH ARCHITECTURAL AND OTHER TRADES EXACT LOCATION OF ALL PLUMBING FIXTURES.

PLUMBING NOTES

1. CONNECTIONS: PROVIDE PLUMBING FIXTURE CONNECTIONS TO BUILDING WASTE, VENT, COLD WATER, AND HOT WATER SYSTEM IN ACCORDANCE WITH DRAWINGS, MANUFACTURER'S RECOMMENDATIONS, AND LOCAL CODES. CONNECT TO EACH FIXTURE, EQUIPMENT, ETC. WITH ALL ACCESSORIES, VALVES, VACUUM BREAKERS, REGULATORS, UNIONS, ETC. AS REQUIRED AND AS RECOMMENDED BY THE MANUFACTURERS. REFER TO PLUMBING FIXTURE CONNECTION SCHEDULE ON PLANS.
2. HOT AND COLD: WATER PIPING CONNECTION TO EACH FIXTURE SHALL BE COLD WATER ON THE RIGHT HAND SIDE AND HOT WATER ON THE LEFT HAND SIDE.
3. HOT WATER: NON–CIRCULATING HOT WATER PIPE SHALL NOT EXCEED 10' UNLESS OTHERWISE SHOWN ON DRAWINGS. HOT WATER PIPING IN UNITS DOES NOT APPLY.
4. VENT STACKS: COORDINATE VENT STACK WITH HVAC EQUIPMENT TO MAINTAIN MINIMUM 10' CLEARANCE FROM OUTSIDE AIR INTAKES.
5. CLEANOUTS: PROVIDE CLEANOUTS PER CURRENT CPC AND AS REQUIRED BY LOCAL JURISDICTIONS. CLEANOUTS SHALL BE LOCATED IN WALLS/FLOORS WHERE THEY ARE NOT HIGHLY VISIBLE. LOCATIONS SHALL BE SUBMITTED TO ARCHITECT FOR APPROVAL. NOTE: NOT ALL CLEANOUTS ARE SHOWN ON THE PLUMBING DRAWINGS.
6. SHUT–OFFS: PROVIDE SHUT–OFF VALVES/STOPS AT HOT AND COLD WATER SUPPLY TO EACH FIXTURE. EXCEPTION: PROVIDE SCREWDRIVER STOPS AT BATH/SHOWERS.
7. TUB SPOUTS SHALL BE THREADED (NO PUSH–ON FITTINGS).
8. TRAP ARMS: PROVIDE TRAP ARMS SUCH THAT THE MAXIMUM LENGTH WILL NOT EXCEED CODE REQUIREMENTS.
9. ADA INSULATION: AT PLUMBING PIPING EXPOSED UNDER LAVATORIES, INSULATE THE EXPOSED PIPING AND TRAPS WITH PRODUCT SPECIFICALLY DESIGNED FOR THIS APPLICATION MEETING ADA REQUIREMENTS. PROVIDE HANDI–LAV GUARD OR EQUIVALENT. OFFSET P–TRAPS TO CLEAR WHEELCHAIR ACCESS.
10. WATER HAMMER ARRESTERS: PROVIDE AT THE END OF HOT AND COLD WATER LINES SERVING TWO OR MORE FIXTURES; SIZE IN ACCORDANCE WITH PLUMBING AND DRAINAGE INSTITUTE (PDI) REQUIREMENTS. WATER HAMMER ARRESTORS ARE REQUIRED FOR QUICK CLOSING VALVES, SUCH AS LAUNDRY WASHERS, FLUSH VALVES (PUBLIC TOILETS), ETC.
11. REDUCED PRESSURE BACKFLOW PREVENTERS: PROVIDE INDIRECT DRAIN PIPING FROM RPBP TO NEAREST DRAIN; INSTALL FUNNEL AT RPBP IF REQUIRED.
12. TRAP PRIMERS: PROVIDE TRAP PRIMERS AND PIPING FOR DRAINS AND FLOOR SINKS. ARRANGE PIPING TO ACHIEVE EQUAL FLOW TO EACH DRAIN AND FLOOR SINK FOR TRAP PRIMERS SERVING MULTIPLE DRAINS AND FLOOR SINKS.
13. PER CPC 507.4, WATER HEATERS SHALL BE PLACED ON A CONCRETE PAD AT LEAST 3" ABOVE ADJOINING GROUND LEVEL.
14. ACCESS PANELS: PROVIDE ACCESS PANELS FOR ALL SHUT OFF VALVES.

PIPING NOTES

1. DISASSEMBLY PROVISIONS: PROVIDE UNIONS OR FLANGES AT PIPING CONNECTIONS TO EQUIPMENT, COILS, TRAPS, CONTROL VALVES, AND OTHER COMPONENTS TO ALLOW DISASSEMBLY FOR MAINTENANCE.
2. REDUCERS: PROVIDE AS REQUIRED FROM LINE PIPE SIZE TO EQUIPMENT, TRAP, COIL, AND CONTROL VALVE CONNECTION SIZES.
3. OFFSETS: PROVIDE FOR BRANCH LINES TO EQUIPMENT.
4. DIELECTRIC UNIONS: PROVIDE AT CONNECTIONS OF DISSIMILAR PIPE.
5. REFRIGERANT PIPING: PROVIDE SIZING & INSTALLATION IN STRICT ACCORDANCE WITH MANUFACTURER'S INSTRUCTIONS.
6. CONDENSATE DRAIN: PROVIDE A P–TRAP FOR EACH HVAC UNIT CONDENSATE PAN WITH PLUG TEES FOR CLEANING. CONDENSATE DRAINS SHALL BE DISCHARGED TO AN INDIRECT WASTE OR OUTSIDE.
7. PIPE AND EQUIPMENT INSULATION AND NOISE ISOLATION: ACOUSTO–PLUMB SYSTEM AT 1" OR SMALLER WATER PIPES. HOLDRITE SILENCER SYSTEM AT 1–1/4" AND LARGER.

COUNTY OF SANTA CLARA
BUILDING INSPECTION OFFICE
PLANS APPROVED FOR PERMIT
RECORD NO.: DEV22-1242
BY: Warren Krause Date: 7/28/2023
HARD COPY OF THESE STAMPED PLANS MUST BE ON THE SITE FOR INSPECTIONS

PRE-CON MEETING NOTES

CONTRACTORS SHALL ATTEND A PRE–CONSTRUCTION MEETING WITH THE ENGINEER FOR THE PURPOSE OF REVIEWING THE WORK PRIOR TO ORDERING ANY EQUIPMENT OR PERFORMING ANY WORK. THE MEETING SHALL BE LOCATED AT THE PROJECT SITE ON A DATE AND TIME TO BE MUTUALLY AGREED. THE MEETING WILL BE A WORKING SESSION. THE MEETING WILL BE FACILITATED BY THE ENGINEER AND THE AGENDA WILL INCLUDE A DETAILED REVIEW OF THE PLANS AND SPECIFICATIONS, CROSS CHECK WITH OTHER TRADES FOR COORDINATION ISSUES, REVIEW OF PROPOSED PRODUCTS, REVIEW OF PLANNED MEANS AND METHODS,AND ON–SITE INVESTIGATION OF FIELD CONDITIONS RELATIVE TO EXISTING CONDITIONS THAT COULD AFFECT THE WORK. PERSONS ATTENDING THE MEETING SHALL BE KNOWLEDGEABLE OF THE PROJECT AND SHALL BE THE SPECIFIC PERSONS INTENDED TO CONTINUE WITH THE PROJECT THROUGH TO COMPLETION. IF REQUIRED, REVISED PLANS WILL BE ISSUED THROUGH OFFICIAL CHANNELS. CHANGES IN THE BID PRICE WILL BE DISCUSSED, BUT NO CHANGE ORDERS WILL BE ISSUED UNLESS PROCESSED THOUGH OFFICIAL CHANNELS. IT SHALL BE UNDERSTOOD THAT THE ENGINEER HAS NO AUTHORITY TO ISSUE CHANGE ORDERS.

THE FOLLOWING TRADES SHALL BE REPRESENTED FOR THE MINIMUM TIME INDICATED:

MECHANICAL	2 HOURS
PLUMBING	2 HOURS
ELECTRICAL	2 HOURS
GENERAL CONTRACTOR	ALL SESSIONS

APPLICABLE CODES

–2019 CALIFORNIA BUILDING CODE
–2019 CALIFORNIA MECHANICAL CODE
–2019 CALIFORNIA PLUMBING CODE
–2019 CALIFORNIA ENERGY CODE

PIPE MATERIALS

1. UNDERGROUND SERVICE ENTRANCE PIPING: COPPER TYPE K OR DUCTILE IRON. PIPING SHALL HAVE BITUMINOUS COATING AND ENCASED IN AN 8–MIL POLYETHYLENE BAG IN ACCORDANCE WITH AWWA SPECIFICATION C–105.
2. ABOVEGROUND WATER DISTRIBUTION PIPING: CPVC SDR–11 FOR 2" AND SMALLER, CPVC SCH. 80 FOR 2" AND LARGER. COPPER TYPE–L IN MECHANICAL ROOM. PEX OR CPVC WITHIN UNITS.
3. UNDERGROUND WASTE AND VENT PIPING: SOLID CORE PVC
4. PUMPED WASTE PIPING: COPPER OR STAINLESS STEEL. UNDERGROUND COPPER TO BE ENCASED IN 6–MIL MINIMUM POLYETHYLENE IN ACCORDANCE WITH AWWA SPECIFICATION C–105. UNDERGROUND STAINLESS STEEL TO BE PRIMED AND WRAPPED WITH POLYGUARD 'RD–6'. UNDERGROUND STAINLESS STEEL SHOULD ALSO BE ISOLATED FROM OTHER METALLIC PIPELINES, REINFORCED CONCRETE STRUCTURES AND ABOVE GRADE BUILDINGS/ STRUCTURES WITH INSULATING FLANGES AND/OR COUPLINGS. CATHODIC PROTECTION UTILIZING MAGNESIUM ANODES SHOULD BE USED TO PROTECT UNDERGROUND STAINLESS STEEL IN ACCORDANCE WITH NACE STANDARD SP0169–13 AND APPLICABLE LOCAL STANDARDS.
5. ABOVEGROUND WASTE AND VENT PIPING: CAST IRON.
6. UNDERGROUND STORM PIPING: SOLID CORE PVC
7. ABOVEGROUND STORM PIPING: CAST IRON.
8. CONDENSATE DRAIN PIPING: COPPER TUBING, TYPE M. UNDERGROUND COPPER TO BE ENCASED IN 6–MIL MINIMUM POLYETHYLENE IN ACCORDANCE WITH AWWA SPECIFICATION C–105
9. IRRIGATION PIPING: CPVC SDR–11

NOTE: ALL METALLIC PIPE, FITTINGS AND PARTS OF FIXTURES BURIED IN THE GROUND SHALL BE PROTECTED BY AT LEAST 2 LAYERS OF 3 MIL PLASTIC OR EQUIVALENT WRAPPING.

DRAWING INDEX

DWG	DESCRIPTION	INCLUDED IN SET: 50% DD SET 09/13/21	100% DD SET 8/1/22	PERMIT RESUB 11/11/22	BID SET 12/22/22	PERMIT RESUB 3/16/23	PERMIT RESUB 5/30/23	PERMIT RESUB 7/27/23	
P0.00	LEGEND, GENERAL NOTES & DRAWING INDEX	●	●	●	●	●	●	●	
P0.01	SCHEDULES & CALCULATIONS	●	●	●	●	●	●	●	
P0.02	SCHEDULES & CALCULATIONS	●	●	●	●	●	●	●	
P0.03	NOTES			●	●	●	●	●	
P2.00	UNDERSLAB PLAN	●	●	●	●	●	●	●	
P2.01	FIRST FLOOR PLAN	●	●	●	●	●	●	●	
P2.01S	FIRST FLOOR PLAN – SUPPLY		●	●	●	●	●	●	
P2.02	SECOND FLOOR PLAN	●	●	●	●	●	●	●	
P2.03	THIRD FLOOR PLAN	●	●	●	●	●	●	●	
P2.04	FOURTH FLOOR PLAN	●	●	●	●	●	●	●	
P2.05	ROOF PLAN	●	●	●	●	●	●	●	
P3.00	ENLARGED PLANS	●	●	●	●	●	●	●	
P3.01	ENLARGED PLANS	●	●	●	●	●	●	●	
P3.02	ENLARGED UNIT PLANS	●	●	●	●	●	●	●	
P3.03	ENLARGED UNIT PLANS	●	●	●	●	●	●	●	
P3.04	ENLARGED UNIT PLANS			●	●	●	●	●	
P4.00	DETAILS & DIAGRAMS	●	●	●	●	●	●	●	
P4.01	DETAILS & DIAGRAMS	●	●	●	●	●	●	●	
P4.02	DETAILS & DIAGRAMS	●	●	●	●	●	●	●	
P4.03	DETAILS & DIAGRAMS	●	●	●	●	●	●	●	
P4.04	DETAILS & DIAGRAMS		●	●	●	●	●	●	
P4.05	DETAILS & DIAGRAMS		●	●	●	●	●	●	
P4.06	DETAILS & DIAGRAMS			●	●	●	●	●	
P4.07	DETAILS & DIAGRAMS			●	●	●	●	●	
P4.08	DETAILS & DIAGRAMS			●	●	●	●	●	
P4.09	STORMWATER RISER DIAGRAM			●	●	●	●	●	
P4.10	STORMWATER RISER DIAGRAM			●	●	●	●	●	
P4.11	STORMWATER RISER DIAGRAM			●	●	●	●	●	
P4.12	DETAILS & DIAGRAMS			●	●	●	●	●	
P4.13	DETAILS & DIAGRAMS								

VAN METER WILLIAMS POLLACK LLP
ARCHITECTURE | URBAN DESIGN ■ SAN FRANCISCO | DENVER | MINNEAPOLIS
333 Bryant Street, Suite 300, San Francisco, CA 94107 T 415.974.5352

CIVIL ENGINEER
BKF - SAN JOSE
1730 N. FIRST ST. STE 600
SAN JOSE, CA 95112

LANDSCAPE ARCHITECT
PLURAL STUDIO
2742 17TH STREET
SAN FRANCISCO, CA 94110

STRUCTURAL ENGINEER
HOHBACH-LEWIN
250 SHERIDAN AVE STE 100
PALO ALTO, CA 94306

MEP ENGINEER
EMERALD CITY ENGINEERS
21705 HIGHWAY 99
LYNWOOD, WA 98036

SUSTAINABILITY/ENERGY
REDWOOD ENERGY
1887 Q STREET
ARCATA, CA 95521

EMERALD CITY ENGINEERS, INC
21705 Highway 99
Lynnwood, WA 98036
TEL: 425-741-1200

REGISTERED PROFESSIONAL ENGINEER MASSAMAGHAN KONI No. M 38848 EXP. 03-31-24 MECHANICAL STATE OF CALIFORNIA
07/27/23

ID	DATE	NAME
1	11/11/22	PERMIT SET - CONV
A	12/16/22	BID SET
B	03/20/23	BID ADDENDUM SET
2	03/20/23	PLAN CHECK COMMENT RESPONSES SET
3	05/18/23	PLAN CHECK COMMENT RESPONSES SET
3	06/12/23	GRADING PERMIT
4	07/27/23	BUILDING RESUBMITTAL

Project:

EDUCATOR HOUSING
231 GRANT AVENUE

231 GRANT AVENUE
PALO ALTO, CA 94306

Client:

mercy HOUSING
abode communities
MERCY HOUSING/
ABODE COMMUNITIES

LEGEND, GENERAL NOTES, DWG INDEX

JOB #: 2293-007

SCALE:

P0.00

GRADING PERMIT | DATE: 06/12/2023

PLUMBING FIXTURE SCHEDULE (1) (4) (6)

PLAN MARK	ROOM LOCATION	SERVICE SIZE (INCHES) CW	HW	W	V	FIXTURE TYPE	FINISH	MANUFACTURER	MODEL	NOTES
BATH–1	RESIDENT UNIT BATHROOM	1/2	1/2	2	1–1/2	BATHTUB/ SHOWER COMBO	WHITE	AQUATIC	F6030STT	PROVIDE BLOCKING FOR GRAB BARS, REMOVABLE PHENOLIC SEAT
						VALVE TRIM	CHROME	GROHE	14466400	
						TUB SPOUT	CHROME	GROHE	13366000	
						SHOWER HEAD	CHROME	GROHE	26051001	1.5 GPM
						SHOWER ARM	CHROME	GROHE	27412000	
						DRAIN	CHROME	LSP RAPID FIT	R–9000	TWO HOLE OVERFLOW PLATE TOE TOUCH TUB CLOSURE, ADA
SH–1	RESIDENT UNIT BATHROOM (ADA)	1/2	1/2	2	1–1/2	SHOWER	WHITE	ASURA	XST6030	ADA, PROVIDE BLOCKING FOR GRAB BARS, FOLDABLE SEAT, SLIDE BAR FOR HANDHELD SHOWER
						CONTROLS				
						VALVE TRIM	CHROME	GROHE	14466400	
						HANDHELD SHOWER	CHROME	GROHE	26046002	1.75 GPM
						DRAIN	CHROME	LSP RAPID FIT	R–9000	TWO HOLE OVERFLOW PLATE TOE TOUCH TUB CLOSURE, ADA
LAV–1	RESIDENT UNIT BATHROOM (ADA)	1/2	1/2	2	1–1/2	LAVATORY	WHITE	AMERICAN STANDARD	0614.300	ADA
						FAUCET	CHROME	GROHE	2303600A	1.2 GPM, ADA, WATER SENSE
LAV–2	PUBLIC BATHROOM	1/2	1/2	2	1–1/2	LAVATORY	WHITE	AMERICAN STANDARD	0614.300	ADA COMPLIANT
						FAUCET	CHROME	SLOAN	EFX–275	0.5 GPM, ADA COMPLIANT
LAV–3	PUBLIC BATHROOM	1/2	1/2	2	1–1/2	LAVATORY	WHITE	AMERICAN STANDARD	9141.011	ADA COMPLIANT
						FAUCET	CHROME	SLOAN	EFX–275	0.5 GPM, ADA COMPLIANT
SK–1	RESIDENT UNIT KITCHEN	1/2	1/2	2	1–1/2	SINK	STAINLESS STEEL	AMERISINK	AS3330	UNDERMOUNT, ADA
						FAUCET	POLISHED CHROME	GROHE	CONCETTO 31453001	1.5 GPM, ADA, SPRAY FAUCET
SK–2	COMMUNITY ROOM	1/2	1/2	2	1–1/2	SINK	STAINLESS STEEL	AMERISINK	AS3330	UNDERMOUNT, ADA
						FAUCET	CHROME	GROHE	3134900E	1.5 GPM, ADA, SPRAY FAUCET
SK–3	LAUNDRY SINK	1/2	1/2	2	1–1/2	SINK	STAINLESS STEEL	DAYTON	GE12522	
						FAUCET	CHROME	CORNERSTONE	40512	1.5 GPM, ADA
WC–1	RESIDENT UNIT BATHROOM	1/2		3	2	WATER CLOSET	WHITE	STERLING	402313	1.28 GPF, ADA, WATER SENSE
						SEAT	WHITE	KOHLER	K–4636	
WC–2	PUBLIC RESTOOMS – ADA	2		4	2	WATER CLOSET	WHITE	KOHLER	K–96057	1.28 GPF, ADA COMPLAINT
						SEAT	WHITE	KOHLER	K–4731	
						FLUSH VALVE	POLISHED CHROME	KOHLER	K–10956–SV	SENSOR OPERATED
FCO	PER DWGS					FLOOR CLEANOUT	NICKEL BRONZE	JAY R. SMITH	4020	
WCO	PER DWGS					WALL CLEANOUT	STAINLESS STEEL	JAR R. SMITH	4402	
FD–1	PER DWGS			NOTE 2		FLOOR DRAIN	NICKLE BRONZE	JAY R. SMITH	2005 SERIES	
FD–2	PER DWGS			NOTE 2		FLOOR DRAIN	NICKLE BRONZE	JAY R. SMITH	2005–DX	
FS–1	PER DWGS			NOTE 2		FLOOR SINK	NICKLE BRONZE	JAY R. SMITH	3140	
HB–1	PER DWGS	3/4				WALL HYDRANT	N/A	CHAMPION ARROWHEAD	465	
HB–2	PER DWGS	3/4				ROOF HYDRANT	N/A	CHAMPION ARROWHEAD	965LF	BUILT–IN ANTI–SIPHON VACUUM BREAKER
HB–3	PER DWGS	3/4	3/4			WALL HYDRANT	N/A	ZURN	Z–1327–EZ	HOT & COLD HOSE BIBB
HD–1	PER DWGS			NOTE 2		HUB DRAIN	N/A	JAY R. SMITH	2645	
WB–1	LAUNDRY ROOM	3/4	3/4	2	1–1/2	CLOTHES WASHER BOX (NON–RATED)	WHITE	OATEY	38630	PROVIDE FIRE RATED ENCLOSURE IF LOCATED IN FIRE RATED WALL
FSV–1	LAUNDRY	1/2	1/2			FLOOD STOP VALVE	N/A	ONSITE PRO INC.	FS3/4H–90	
WP–1	LAUNDRY					WASHER PAN	WHITE	OATEY	34052	
MS–1	PER PLANS	3/4	3/4	3	2	MOP BASIN	WHITE	MUSTEE 62M	62M	
						FAUCET	CHROME	MUSTEE 63.600A		
						HOSE AND HOSE HOLDER	N/A	MUSTEE 65.700		
						WALL GUARD	STAINLESS	MUSTEE 67.2424		
DF–1	PER DWGS	1/2	––	2	1–1/2	DRINKING FOUNTAIN	STAINLESS	HAWS	1011HPS–1920HPS	ADA, DUAL WALL MOUNT WITH BOTTLE FILLER
						HO SENSOR	N/A	HAWS	3RKHO.P	
SS–1	PER DWGS	1/2	1/2	2	1–1/2	SERVICE SINK	WHITE	MUSTEE	18F	
FD–1	PER DWGS			NOTE 2		AREA DRAIN	N/A	JAY R. SMITH	2010	
FD–2	PER DWGS			NOTE 2		AREA DRAIN	N/A	JAY R. SMITH	220–Y02	
GD–1	GARAGE			NOTE 2		GARAGE DRAIN	N/A	JAY R. SMITH	2614	
PD–1	PER DWGS			NOTE 2		PLANTER DRAIN (2–STAGE)	N/A	MIFAB	F1100–C–PLA	
PD–2	PER DWGS			NOTE 2		PODIUM DRAIN		MIFAB	F1100–C–BP	
BWV–1	PER DWGS	––	4	––		BACKWATER VALVE	N/A	SIOUX CHEIF	869–S4PS	PROVIDE REQUIRED ACCESS
BWV–2	PER DWGS	––	4	––		BACKWATER VALVE	N/A	SIOUX CHEIF	869–S4PS	PROVIDE REQUIRED ACCESS

NOTES:
(1) PROVIDE RED/HOT AND BLUE/COLD WATER INDICATORS TO ALL FIXTURES.
(2) SIZE PER PLANS
(3) FLUSH TRIGGER SHALL BE ON WIDE SIDE OF ROOM
(4) CONTRACTOR SHALL CONFIRM MAKE, MODEL, AND FINISH OF ALL FIXTURES WITH OWNER, ARCHITECT, AND INTERIOR DESIGNER PRIOR TO ORDERING.
(5) UNDERMOUNT SINK FOR SELECT GROUNDFLOOR UNITS WITH SOLID COUNTER TOPS. REF ARCH PLANS FOR LOCATIONS.
(6) PROVIDE LISTED FIXTURE OR APPROVED EQUAL.
(7) PROVIDE THERMOSTATIC MIXING VALVE UNDER SINK.
(8) PROVIDE ASSE 1070 APPROVED BELOW DECK THERMOSTATIC MIXING VALVE AND SET TO 105F. PROVIDE WITH HAND SHIELD ASTM E 84 UNDER SINK PROTECTIVE/SAFETY COVER

INTERCEPTOR SCHEDULE

EQUIP NO.	SERVICE	BASIS OF DESIGN	NOTES
OWS–1	GARAGE	JENSEN JP320EE–SO	320 GAL OIL/SAND SEPARATOR (1)(2)(3)

NOTES:
(1) ENTIRE SEPARATOR SHALL BE "H20" TRAFFIC RATED.
(2) OIL WATER SEPARATOR SHALL HAVE OWN INDEPENDENT VENT TO THE ROOF.
(3) ANCHOR INTERCEPTOR TO SLAB WITH CC16 CLAMPING COLLAR KIT

BACKWATER VALVE SCHEDULE

EQUIP NO.	MANUFACTURER	MODEL	LOCATION	SIZE	TYPE
BWV–1	SIOUX CHIEF	PRO–CHECK	P1 GARAGE	4"	NORMALLY CLOSED
BWV–2	SIOUX CHIEF	PRO–CHECK	P1 GARAGE	3"	NORMALLY CLOSED
BWV–3	SIOUX CHIEF	PRO–CHECK	P1 GARAGE	2"	NORMALLY CLOSED
BWV–4	SIOUX CHIEF	PRO–CHECK	P1 GARAGE	4"	NORMALLY CLOSED

EXPANSION TANK SCHEDULE

EQUIP NO.	SERVICE	CAPACITY, GALLONS	TANK SIZE, IN DIA.	HEIGHT	WEIGHT	BASIS OF DESIGN
ET–1	RESIDENTIAL UNIT WATER	2	8	14	30	AMTROL ST–5C–DD
ET–2	LAUNDRY WATER	6.4	17	20	75	AMTROL ST–12C–DD

PLUMBING PIPE INSULATION SCHEDULE

SERVICE	MATERIAL	THICKNESS	FIELD APPLIED JACKET	VAPOR RETARDER REQUIRED
DOMESTIC, HOT AND RECIRCULATED HOT WATER, OPERATING TEMPERATURE: 105 TO 140 DEG F. (NOTE: THIS APPLIES TO ALL HOT WATER AND RECIRCULATED HOT WATER PIPING).	MINERAL–FIBER WITH JACKET	½"–¾" PIPE: 1" 1"–1½" PIPE: 1½" 2"–6" PIPE: 2"	NONE	YES
HORIZONTAL RAINWATER CONDUCTORS LOCATED IN CONDITIONED SPACES.	MINERAL–FIBER OR CELLULAR GLASS, WITH JACKET	ALL SIZES: 1/2"	FOIL AND PAPER	YES
ROOF DRAIN BODIES	MINERAL–FIBER OR CELLULAR GLASS WITH JACKET	1"	NONE	YES
EXPOSED SANITARY DRAINS AND DOMESTIC WATER SUPPLIES AND STOPS FOR FIXTURES FOR THE DISABLED.	"LAV–GUARD" AS MANUFACTURED BY TRUEBRO	N/A	PVC P–TRAP AND SUPPLY COVERS	NO

DOMESTIC WATER HEATER SCHEDULE – HEAT PUMP

EQUIP NO.	AREA SERVED	STORAGE GALLONS	VOLTAGE	ELECTRICAL BREAKER SIZE	UNIFORM ENERGY FACTOR	STORAGE TEMP, °F	GPH RECOVERY AT 90°F TR	ELECTRICAL ELEMENT	BASIS OF DESIGN
WH–1	STUDIO UNITS	50	208V/1P	15	3.75	120	16	2,250 W	RHEEM PROPH50 T2 RH375–15 (1)
WH–2	1 BEDROOM UNITS	50	208V/1P	30	3.75	120	27	4,500 W	RHEEM PROPH50 T2 RH375–30 (1)
WH–3	2 BEDROOM UNITS	65	208V/1P	30	3.85	120	27	4,500 W	RHEEM PROPH65 T2 RH375–30 (1)
WH–4	COMMUNITY ROOM	80	208V/1P	30	4.00	120	27	4,500 W	RHEEM PROPH80 T2 RH375–30 (1)
WH–5	LAUNDRY	80	208V/1P	30	4.00	120	27	4,500 W	RHEEM PROPH80 T2 RH375–30 (1)(2)

NOTES:
(1) PROVIDE SPECIFIED UNIT OR EQUAL.
(2) MULTIPLE WATER HEATERS ARE IDENTIFIED WITH A LETTER SUFFIX (WH–5A, WH–5B, ETC.). THERE MAY BE GAPS IN THE SEQUENCE

DOMESTIC WATER HEATER SCHEDULE –ELEC

EQUIP NO.	SERVICE	HEAT EXCHANGER FUEL SOURCE	GPH RECOVERY AT 100°F TR	STORAGE, GALLONS	STORAGE, DEG. F	ELECTRICAL	BASIS OF DESIGN
EWH–1	MAINTENANCE	ELEC	7	2.5	110	120V/1P, 1.5 KW	RELIANCE 6 2 SSUSK (1)
EWH–2	PUBLIC RESTROOM	ELEC	7	2.5	110	120V/1P, 1.5 KW	RELIANCE 6 2 SSUSK (1)

(1) MULTIPLE HEATERS ARE IDENTIFIED WITH A LETTER SUFFIX (EWH–1A, EWH–1B, ETC.). THERE MAY BE GAPS IN THE SEQUENCE.

PACKAGED BOOSTER PUMP SCHEDULE

EQUIP NO.	SERVICE	TYPE	FLOW PER PUMP, GPM	TOTAL FLOW, GPM	PRESSURE RISE INLET/OUTLET PSIG	MOTOR HP (EACH)	STORAGE TANK TYPE/GAL	ELECTRICAL	BASIS OF DESIGN
BP–1	DOMESTIC WATER	DUPLEX	110	220	44/80	10	INTEGRAL/120	208V/3P (1)	FLOWTHERM OR EQUAL (2)(3)

NOTES:
(1) SINGLE POINT CONNECTION.
(2) PROVIDE ALL REQUIRED VALVES, PIPING, CONTROLS, ETC. FOR A COMPLETE SYSTEM.
(3) PROVIDE VFD'S FOR EACH PUMP, 304 STAINLESS STEEL HEADERS, INDIVIDUAL CHECK VALVE PER PUMP.
(4) PROVIDE HYDROPNEUMATIC TANK WITH ACCESSORY PACKAGE PIPED AND MOUNTED ON SKID.
(5) SYSTEM CONTROLS AND VFD'S SHALL BE MOUNTED AND WIRED TO THE SYSTEM.
(6) MOTORS TO BE RATED FOR VFD APPLICATION.

EJECTOR PUMP SCHEDULE

EQUIP NO.	SERVICE	TYPE	NO. OF PUMPS	FLOW PER PUMP, GPM	HEAD PER PUMP, FT	ELECTRICAL VOLTAGE	HP (EACH)	SUMP PIT (1) SIZE	DEPTH	BASIS OF DESIGN
EPS–1	SANITARY SEWER(FIRE DISCHARGE)	SUMP	2	30	45	208V/3P	1.5	198x96	84	WEIL 1601 (2)(3)(4)(5)(6)

NOTES:
(1) SUMP SIZES ARE INSIDE CLEAR DIMENSIONS.
(2) PUMP SHALL ALTERNATE OPERATION IN NORMAL USE AND INDEPENDENTLY IN CASE OF OVERLOAD OR MECHANICAL FAILURE.
(3) EXPLOSION PROOF
(4) EACH EJECTOR PUMP STATION SHALL HAVE OWN INDEPENDENT VENT TO THE ROOF.
(5) REFERENCE DETAIL 2 ON SHEET P4.03 FOR DETAILS.
(6) EJECTOR PUMP SYSTEM AND ENCLOSURE SHALL BE H20 TRAFFIC RATED, PROVIDE ALL REQUIRED ACCESSORIES AND EQUIPMENT FOR HIGH WATER TABLE APPLICATIONS. PROVIDE H20 42x42 ACCESS DOOR – HALLIDAY PRODUCTS H2R4242

COPYRIGHT 2023, EMERALD CITY ENGINEERS, INC.
KSTEPHENS J:\2293-007 231 GRANT, PALO ALTO, CA\DWG\P001.DWG 03-16-2023 21:38

VAN METER WILLIAMS POLLACK LLP
ARCHITECTURE | URBAN DESIGN ■ SAN FRANCISCO | DENVER | MINNEAPOLIS
333 Bryant Street, Suite 300, San Francisco, CA 94107 T 415.974.5352

CIVIL ENGINEER
BKF - SAN JOSE
1730 N. FIRST ST. STE 600
SAN JOSE, CA 95112

LANDSCAPE ARCHITECT
PLURAL STUDIO
2742 17TH STREET
SAN FRANCISCO, CA 94110

STRUCTURAL ENGINEER
HOHBACH-LEWIN
250 SHERIDAN AVE STE 100
PALO ALTO, CA 94306

MEP ENGINEER
EMERALD CITY ENGINEERS
21705 HIGHWAY 99
LYNWOOD, WA 98036

SUSTAINABILITY/ENERGY
REDWOOD ENERGY
1887 Q STREET
ARCATA, CA 95521

EMERALD CITY ENGINEERS, INC
21705 Highway 99
Lynnwood, WA 98036
TEL: 425-741-1200

REGISTERED PROFESSIONAL ENGINEER
MASSAMAGHAN KONJ
No. M38848
EXP. 03-31-24
MECHANICAL
STATE OF CALIFORNIA
07/27/23

ID	DATE	NAME
1	11/11/22	PERMIT SET - CONV
A	12/16/22	BID SET
B	03/20/23	BID ADDENDUM SET
2	03/20/23	PLAN CHECK COMMENT RESPONSES SET
3	05/18/23	PLAN CHECK COMMENT RESPONSES SET
3	06/12/23	GRADING PERMIT
4	07/27/23	BUILDING RESUBMITTAL

Project:

EDUCATOR HOUSING
231 GRANT AVENUE

231 GRANT AVENUE
PALO ALTO, CA 94306

Client:
mercy HOUSING
abode communities
MERCY HOUSING/
ABODE COMMUNITIES

SCHEDULES & CALCULATIONS

COUNTY OF SANTA CLARA
BUILDING INSPECTION OFFICE
PLANS APPROVED FOR PERMIT
RECORD NO.: DEV22-1242
BY: Warren Krause Date: 7/28/2023
HARD COPY OF THESE STAMPED PLANS MUST BE ON THE SITE FOR INSPECTIONS

JOB #: 2293-007
SCALE:

P0.01

GRADING PERMIT | DATE: 06/12/2023

NOTES & SCHEDULES

CALGREEN NOTES

PROJECT SHALL COMPLY WITH THE CURRENT CALGREEN CODE REQUIREMENTS PER BELOW:

RESIDENTIAL MEASURES:
A4.303.1: PLUMBING FIXTURES AND FITTINGS SHALL COMPLY WITH THE PRESCRIPTIVE REQUIREMENTS OF 4.303.1.1 THROUGH 4.303.1.4.4.

A4.303.2: PLUMBING FIXTURES AND FITTINGS REQUIRED IN SECTION

A4.303.1 SHALL BE INSTALLED IN ACCORDANCE WITH THE CPC.

A4.303.1.1: THE EFFECTIVE FLUSH VOLUME OF ALL WATER CLOSETS SHALL NOT EXCEED 1.28 GPF

A4.303.1.3.1: SHOWERHEADS SHALL HAVE A MAXIMUM FLOW RATE OF NOT MORE THAN 1.8 GPM AT 80 PSI.

A4.303.1.4.1: THE MAXIMUM FLOW RATE OF RESIDENTIAL LAVATORY FAUCETS SHALL NOT EXCEED 1.2 GPM AT 60 PSI AND NOT LESS THAN 0.8 GPM AT 20 PSI.

A4.303.1: KITCHEN FAUCETS. MAXIMUM FLOW RATE OF KITCHEN FAUCETS SHALL NOT EXCEED 1.8 GPM AT 60 PSI. NOTE: AERATORS OR OTHER MEANS MAY BE USED TO ACHIEVE REDUCTION.

NON-RESIDENTIAL MEASURES:
A5.303.2.3.1 TIER 1 – 12 PERCENT WATER SAVINGS: A SCHEDULE OF PLUMBING FIXTURES SHALL REDUCE THE OVERALL POTABLE WATER USE WITHIN THE BUILDING BY 12 PERCENT.

NOTE: BUILDING SHALL COMPLY WITH 2019 GREEN CODE 5.303.4 BY THE INSTALLATION OF WATER-CONSERVING FIXTURES (WATER CLOSETS, URINALS) MEETING THE CRITERIA ESTABLISHED IN SECTIONS 5.303.2 OR 5.303.3.

PLUMBING FIXTURES (WATER CLOSETS AND URINALS) AND FITTINGS (FAUCETS AND SHOWERHEADS) SHALL MEET THE STANDARDS REFERENCED IN TABLE 5.303.6.

1. PER 5.504 & 4.504, ALL ADHESIVES, SEALANTS, AND COATINGS SHALL MEET THE VOC LIMITS INDICATED IN CALGREEN.
2. 5.410.2 COMMISSIONING. [N] FOR NEW BUILDINGS 10,000 SQUARE FEET AND OVER, BUILDING COMMISSIONING SHALL BE INCLUDED IN THE DESIGN AND CONSTRUCTION PROCESSES OF THE BUILDING PROJECT TO VERIFY THAT THE BUILDING SYSTEMS AND COMPONENTS MEET THE OWNER'S OR OWNER REPRESENTATIVE'S PROJECT REQUIREMENTS. COMMISSIONING SHALL BE PERFORMED IN ACCORDANCE WITH THIS SECTION BY TRAINED PERSONNEL WITH EXPERIENCE ON PROJECTS OF COMPARABLE SIZE AND COMPLEXITY. COMMISSIONING REQUIREMENTS SHALL INCLUDE:
    1. OWNER'S OR OWNER REPRESENTATIVE'S PROJECT REQUIREMENTS.
    2. BASIS OF DESIGN.
    3. COMMISSIONING MEASURES SHOWN IN THE CONSTRUCTION DOCUMENTS.
    4. COMMISSIONING PLAN.
    5. FUNCTIONAL PERFORMANCE TESTING.
    6. DOCUMENTATION AND TRAINING.
    7. COMMISSIONING REPORT.
3. THIRD PARTY INSPECTION REQUIRED TO CERTIFY THE CALGREEN MEASURES.
4. 4.406.1: SECTION 4.406.1 –– SEAL BUILDING ENVELOPE JOINTS AND OPENINGS ACCORDING TO CEC

CALGREEN REQUIREMENTS

RESIDENTIAL TABLE 4.303.1 RESIDENTIAL MANDATORY FLOWRATES

FIXTURE TYPE	MAXIMUM FLOW RATE (CALGREEN)	MAXIMUM FLOW RATE (WATERSENSE)
WATER CLOSETS – FLUSHOMETER VALVE TYPE	1.28 GAL/FLUSH	1.28 GAL/FLUSH
WATER CLOSETS – TANK TYPE	1.28 GAL/FLUSH	1.28 GAL/FLUSH
URINALS	0.5 OR 0.125 GAL/FLUSH	0.5 GAL/FLUSH
BATHROOM LAVATORY	0.5 GPM @ 60 PSI	1.2 GPM @ 60 PSI
KITCHEN FAUCETS	1.8 GPM @ 60 PSI	1.8 GPM @ 60 PSI
KITCHEN SPRAY FAUCETS	1.6 GPM @ 60 PSI	N/A
SHOWERHEADS	1.8 GPM @ 80 PSI	2.0 GPM @ 60 PSI

NOTE: 1. FLOW RATES REDUCE WATER USAGE AND WASTEWATER

NON-RESIDENTIAL TABLE 5.303.6 REQUIRED STANDARDS FOR PLUMBING FIXTURES AND FIXTURE FITTINGS

WATER CLOSETS – FLUSHOMETER VALVE TYPE	ASME A 112.19.2/CSA B45.1 1.28 GAL (4.8 L)
WATER CLOSETS – TANK TYPE	U.S. EPA WATERSENSE TANK-TYPE HIGH-EFFICIENCY TOILET SPECIFICATION
URINALS	ASME A 112.19.2/CSA B45.1 0.5 GAL (1.9 L)
PUBLIC LAVATORY FAUCETS: MAXIMUM FLOW RATE – 0.5 GPM (1.9 L/MIN)	ASME A 112.18.1/CSA B125.1

NOTE: APPLICABLE TO THE NON-RESIDENTAL PORTIONS OF THE BUILDING
REFER TO CH.5, TABLE 5.303.6 OF THE CALGREEN CODE FOR ENTIRE TABLE.

NON-RESIDENTIAL TABLE 5.303.2.3 INDOOR WATER USE FLOWRATES

FIXTURE TYPE	MAXIMUM FLOW RATE
WATER CLOSETS – FLUSHOMETER VALVE TYPE	1.28 GAL/FLUSH
WATER CLOSETS – TANK TYPE	1.28 GAL/FLUSH
URINALS	0.5 OR 0.125 GAL/FLUSH
PUBLIC LAVATORY	0.5 GPM @ 60 PSI
KITCHEN FAUCETS	1.8 GPM @ 60 PSI
KITCHEN SPRAY FAUCETS	1.6 GPM @ 60 PSI
SHOWERHEADS	1.8 GPM @ 80 PSI

NOTE: 1. FLOW RATES REDUCE WATER USAGE AND WASTEWATER
2. APPLICABLE TO NON-RESIDENTAL PORTIONS OF THE BUILDING

WATER SUPPLY SIZING CALCULATIONS

HORIZONTAL MAINS

Emerald City Engineers, Inc.
21705 HIGHWAY 99
LYNWOOD, WA 98036

Project Name: 231 GRANT
Project Number: 2293-007
Edited By: KS
Edit Date: 4/29/2021

SIZING IS PER 2016 CPC & APPENDIX A, CHARTS A-2, A-3 & A-4.

WATER SUPPLY PIPE SIZING CALCULATION FORM - HORIZONTAL MAINS

UTILITY SUPPLY WATER PRESSURE: 62.0 PSI STATIC PRESSURE

WATER METER LOSS: 5.0 PSI
TYPICALLY 3-8 PSI.

BACKFLOW PREVENTER LOSS: 10.0 PSI
TYPICALLY 5-10 PSI.

FRICTION LOSS FROM METER TO BUILDING 3.0 PSI

AVAILABLE PRESSURE BEFORE BOOSTER PUMP: 44.0 PSI

AVAILABLE PRESSURE AFTER BOOSTER PUMP: 80.0 PSI

STATIC LIFT: 17 FEET = 7.4 PSI

REQUIRED MINIMUM PRESSURE AT BASE OF FURTHEST RISER: 57.0 PSI

PRESSURE AVAILABLE TO OFFSET FRICTION LOSSES: 15.6 PSI

PIPING SYSTEM LENGTH FROM SERVICE TO FURTHEST FIXTURE: 385.0 FEET
FITTING ALLOWANCE: 192.5 FEET

MAXIMUM FRICTION LOSS FACTOR: 2.7 PSI/100 FT

SELECTED FRICTION LOSS FACTOR: 2.7 PSI/100 FT

MAX CW & HW VELOCITY 8 FPS FOR 1/2" - 2".
MAX CW & HW VELOCITY 5 FPS FOR PIPES 2-1/2" & LARGER.

SUPPLY PIPE SIZING SCHEDULE

PIPE SIZE IN	FLUSH TANK CW FLOW, GPM	FLUSH TANK CW VEL. FPS	FLUSH TANK CW FIXTURE UNITS	HOT WATER FLOW, GPM	HOT WATER VEL. FPS	HOT WATER FIXTURE UNITS	FLUSH VALVE CW FLOW, GPM	FLUSH VALVE CW VEL. FPS	FLUSH VALVE CW FIXTURE UNITS	PIPE MATERIAL
3"	100.4	5.0	382.0	100.4	5.0	382.0	100.4	5.0	247.0	CPVC - SCHEDULE 80
4"	174.4	5.0	775.0	174.4	5.0	775.0	174.4	5.0	735.0	CPVC - SCHEDULE 80
6"	398.7	5.0	2655.0	398.7	5.0	2655.0	398.7	5.0	2655.0	CPVC - SCHEDULE 80
8"	700.1	5.0	5380.0	700.1	5.0	5380.0	700.1	5.0	5380.0	CPVC - SCHEDULE 80

VERTICAL RISERS & RUNOUTS

Enter Your Domestic Water Supply Parameters: **Calculation:**

Input	Parameter		Calculation
57	Pressure Available at Building		+ 57.00 PSI
30	Min. Fixture Working Pressure		- 30.00 PSI
37	Static Loss - System Height (ft.)	37.00 x 0.433	- 16.02 PSI
3	Additional Component Loss		- 3.00 PSI

Available Pressure For Friction Loss = 7.98 PSI

Enter Your Piping Supply Information: **Calculation:**

Input	Parameter	Calculation
70	Longest Run to Fixture (ft.)	+ 70.00 FT
50	Fitting Allowance (% of number above)	+ 35.00 FT

Total Developed Length = 105.00 FT

Friction Loss Rate Per Foot (Friction Loss / TDL) = 0.075 PSI/FT

Friction Loss Rate per 100 Feet (Friction Loss / TDL * 100) = 7.599 PSI/100FT

Water Size Chart for Uponor AquaPEX:

Uponor AquaPEX Water Size Table
UPC - Flush Tank
100% Water @ **60°F**
7.599 PSI/100ft.
Max. Velocity = **8 ft./sec.**

Pipe Size	WSFU Range	Velocity (ft./sec.)	GPM
3/8"	0 -- 0	3.10	0.93
1/2"	1 -- 1	3.90	2.15
3/4"	2 -- 6	5.00	5.51
1"	7 -- 14	5.90	10.73
1 1/4"	15 -- 26	6.80	18.49
1 1/2"	27 -- 51	7.70	29.17
2"	52 -- 134	8.00	51.97
2 1/2"	135 -- 270	8.00	79.21
3"	271 -- 443	8.00	112.63

Uponor AquaPEX Water Size Table
UPC - Flush Tank
100% Water @ **120°F**
7.599 PSI/100ft.
Max. Velocity = **8 ft./sec.**

Pipe Size	WSFU Range	Velocity (ft./sec.)	GPM
3/8"	0 -- 0	3.50	1.05
1/2"	1 -- 1	4.30	2.38
3/4"	2 -- 7	5.50	6.06
1"	8 -- 15	6.50	11.82
1 1/4"	16 -- 30	7.50	20.40
1 1/2"	31 -- 54	8.00	30.31
2"	55 -- 134	8.00	51.97
2 1/2"	135 -- 270	8.00	79.21
3"	271 -- 443	8.00	112.63

Uponor AquaPEX Water Size Table
UPC - Flush Tank
100% Water @ **110°F**
7.599 PSI/100ft.
Max. Velocity = **2 ft./sec.**

Pipe Size	WSFU Range	Velocity (ft./sec.)	GPM
3/8"	0 -- 0	2.00	0.60
1/2"	0 -- 0	2.00	1.10
3/4"	1 -- 1	2.00	2.20
1"	2 -- 3	2.00	3.64
1 1/4"	4 -- 6	2.00	5.44
1 1/2"	7 -- 9	2.00	7.58
2"	10 -- 17	2.00	12.99
2 1/2"	18 -- 29	2.00	19.80
3"	30 -- 49	2.00	28.16

WATER PRESSURE DATA

---------- Forwarded message ---------
From: **Schneider, Karl** <Karl.Schneider@cityofpaloalto.org>
Date: Tue, Mar 2, 2021 at 1:55 PM
Subject: Water Flow Information For The Area Around 231 Grant Ave, Palo Alto
To: Elaine Uang <elaine@vmwp.com>
Cc: Shum, Claire <Claire.Shum@cityofpaloalto.org>

Hi Elaine -

Here's the fire hydrant water flow data we have for this area taken on Nov 29, 2017 :

- 0700 hrs. Park/Sherman - Static = 62; Residual = 56; Pitot = 40; Hydrant Flowing 1061 GPM; Projected Available Flow 3035 GPM
- 0745 hrs. Birch/Sherman - Static = 62; Residual = 50; Pitot = 34; Hydrant Flowing 978 GPM; Projected Available Flow 1924 GPM
- 0815 hrs. Ash/Sherman - Static = 61; Residual = 56; Pitot = 38; Hydrant Flowing 1034 GPM; Projected Available Flow 3222 GPM

We're hoping to have a meeting toward the end of next week with you & Fire Inspector Eric Schiil regarding ground ladder access to the bedroom rescue windows.

Thanks-

Karl Schneider
PAFD/Safebuilt
cell 669-234-0491

COUNTY OF SANTA CLARA
BUILDING INSPECTION OFFICE
PLANS APPROVED FOR PERMIT
RECORD NO.: DEV22-1242
BY: Warren Krause Date: 7/28/2023
HARD COPY OF THESE STAMPED PLANS MUST BE ON THE SITE FOR INSPECTIONS

COPYRIGHT 2023, EMERALD CITY ENGINEERS, INC.
KSTEPHENS J:\2293-007 231 GRANT, PALO ALTO, CA\DWG\P002.DWG 03-16-2023 10:07

VAN METER WILLIAMS POLLACK LLP
ARCHITECTURE | URBAN DESIGN ■ SAN FRANCISCO | DENVER | MINNEAPOLIS
333 Bryant Street, Suite 300, San Francisco, CA 94107 T 415.974.5352

CIVIL ENGINEER
BKF - SAN JOSE
1730 N. FIRST ST. STE 600
SAN JOSE, CA 95112

LANDSCAPE ARCHITECT
PLURAL STUDIO
2742 17TH STREET
SAN FRANCISCO, CA 94110

STRUCTURAL ENGINEER
HOHBACH-LEWIN
250 SHERIDAN AVE STE 100
PALO ALTO, CA 94306

MEP ENGINEER
EMERALD CITY ENGINEERS
21705 HIGHWAY 99
LYNWOOD, WA 98036

SUSTAINABILITY/ENERGY
REDWOOD ENERGY
1887 Q STREET
ARCATA, CA 95521

EMERALD CITY ENGINEERS, INC
21705 Highway 99
Lynnwood, WA 98036
TEL: 425-741-1200

REGISTERED PROFESSIONAL ENGINEER
MASSAMAGHAN KONI
EXP. 03-31-24
MECHANICAL
STATE OF CALIFORNIA
07/27/23

ID	DATE	NAME
1	11/11/22	PERMIT SET - CONV
A	12/16/22	BID SET
B	03/20/23	BID ADDENDUM SET
2	03/20/23	PLAN CHECK COMMENT RESPONSES SET
3	05/18/23	PLAN CHECK COMMENT RESPONSES SET
3	06/12/23	GRADING PERMIT
4	07/27/23	BUILDING RESUBMITTAL

Project:

EDUCATOR HOUSING
231 GRANT AVENUE

231 GRANT AVENUE
PALO ALTO, CA 94306

Client:
MERCY HOUSING/
ABODE COMMUNITIES

SCHEDULES & CALCULATIONS

JOB #: 2293-007
SCALE:

P0.02

GRADING PERMIT | DATE: 06/12/2023

NOTES

PLUMBING SCOPE OF WORK

COLD WATER SERVICE: THERE WILL BE (1) DOMESTIC WATER METER AND (1) RETAIL WATER METER. THERE WILL ALSO BE A SEPARATE IRRIGATION METER, SIZE DETERMINED BY THE LANDSCAPE DESIGNER. THE BACKFLOW PREVENTERS WILL BE LOCATED OUTDOORS. BASED ON THE AVAILABLE WATER PRESSURE, A DOMESTIC BOOSTER PUMP WILL BE REQUIRED.

DOMESTIC HOT AND COLD WATER PIPING (FACTORY BUILT): THE PIPING FOR HOT AND COLD WATER SUPPLY IN THE UNITS WILL BE A STANDARD SYSTEM UTILIZING PEX. DEPENDING ON THE CLASSIFICATION OF THE PROJECT SUBMETERS MAY BE REQUIRED FOR EACH UNIT. THE SYSTEM WILL BE DESIGNED TO DELIVER A MINIMUM OF 25 PSI TO EACH FIXTURE. COLD WATER STUB WILL BE PROVIDED INTO THE PLUMBING CHASE FOR SITE CONNECTION.

DOMESTIC HOT AND COLD WATER PIPING (SITE BUILT): THE PIPING FOR COLD WATER SUPPLY TO THE RESIDENTIAL UNITS (SITE BUILT) WILL BE A STANDARD SYSTEM UTILIZING CPVC FOR THE MAINS AND RISERS AND CONNECTING INTO STUBS FROM THE RESIDENTIAL UNITS (FACTORY BUILT). THE PIPING FOR HOT AND COLD WATER TO THE PUBLIC AMENITIES WILL BE A STANDARD SYSTEM UTILIZING CPVC. THE WATER DISTRIBUTION MAINS WILL BE LOCATED AT THE CEILING OF THE GARAGE AND FIRST FLOOR CORRIDOR.

HOT WATER SERVICE: THERE WILL BE AN INDIVIDUAL TANK-TYPE HEAT PUMP WATER HEATER LOCATED WITHIN EACH RESIDENTIAL UNIT. THE WATER HEATERS WILL STORE THE WATER AT 140 DEGREES, AND A THERMOSTATIC MIXING VALVE WILL BE PROVIDED TO REDUCE THE TEMPERATURE TO 120 DEGREES. HEAT PUMP WATERS WITH A SEPARATE STORAGE TANKS WILL BE PROVIDING HOT WATER TO THE PUBLIC AMENITIES AND OTHER AREAS OF THE BUILDING.

SOLAR HOT WATER: THE PROJECT WILL NOT HAVE ANY SOLAR THERMAL, ONLY PHOTOVOLTAIC PANELS AS OUTLINED IN THE ELECTRICAL SECTION OF THIS DESIGN NARRATIVE.

WASTE AND VENT SYSTEM: A STANDARD WASTE AND VENT SYSTEM UTILIZING NO-HUB CAST IRON ABOVE GRADE AND ABS OR PVC BELOW GRADE WILL BE DESIGNED. DUE TO CORROSIVE SOILS, ANY METALLIC PIPING INSTALLED UNDERGROUND WILL NEED TO BE WRAPPED FOR CORROSION PROTECTION. THE WASTE AND VENT CONNECTION FROM THE FACTORY-BUILT UNITS TO THE SITE-BUILT BUILDING WILL BE LOCATED IN PLUMBING CHASES.

SEWER/STORM EJECTOR PUMPS: UNLESS REQUIRED DUE TO INVERT ISSUES, THERE IS NO PLAN TO HAVE SANITARY SEWER OR STORM EJECTOR PUMP STATIONS OTHER THAN THE ONE REQUIRED FOR FIRE SUPPRESSION SYSTEM DRAINAGE

STORM DRAINAGE: THE ROOFS WILL DRAIN VIA DOWNSPOUTS AND OVERFLOW SCUPPERS. SOME OF THE WATER WILL BE ROUTED THROUGH INFILTRATION PLANTERS AND A MECHANICAL TREATMENT DEVICE AS REQUIRED PER THE STORM WATER CONTROL PLAN. THIS WILL ULTIMATELY BE DETERMINED AS PART OF THE STORMWATER MANAGEMENT PLAN GENERATED BY THE PROJECT'S CIVIL ENGINEER.

MISCELLANEOUS DRAINAGE: FLOOR DRAINS WILL BE PROVIDED IN THE FIRST-FLOOR LEVEL TRASH ROOM, IN THE LAUNDRY ROOMS, MECHANICAL ROOMS AND PUMP ROOMS. PLANTER AND PODIUM DRAINS WILL BE PROVIDED ON THE COURTYARDS. AREA DRAINS AND TRENCH DRAINS WILL BE PROVIDED FOR THE PARKING GARAGE, ROUTED THROUGH AN OIL/WATER SEPARATOR. STANDPIPE DRAINS WILL BE INSTALLED FOR FIRE SERVICE DRAINAGE. FLOOR SINKS WILL BE PROVIDED NEAR THE HEAT PUMPS LOCATED IN THE GARAGE TO COLLECT CONDENSATE DRAINAGE. THE CONDENSATE FROM PTAC'S AND SPLIT SYSTEM HEAT PUMPS WILL BE ROUTED EITHER TO LANDSCAPING OR TO INDIRECT DRAINS. THE HEAT PUMP WATER HEATERS WILL BE PROVIDED WITH DRAIN PANS AND HUB DRAINS WILL BE PROVIDED FOR THE HEAT PUMP WATER HEATER DRAIN PANS AND T&P RELIEF FROM EACH WATER HEATER.

IRRIGATION PIPING: IRRIGATION PIPING WILL BE ROUTED THROUGH THE BUILDING TO LANDSCAPING AREAS FOLLOWING THE IRRIGATION DESIGNERS ROUTING AND SIZING OF IRRIGATION PIPING.

MISCELLANEOUS PIPING: A COLD WATER HOSE BIBB WILL BE PROVIDED ON THE ROOF NEAR THE SOLAR PANELS. HOT AND COLD WATER HOSE BIBBS WILL BE PROVIDED IN THE FIRST FLOOR TRASH ROOM. HOT WATER WILL BE PIPED TO THE TOP FLOOR FOR THE TRASH CHUTE SANITIZERS. COLD WATER HOSE BIBBS WILL BE PROVIDED AT BUILDING PERIMETER AND AT THE PODIUM.

PLUMBING FIXTURES: LOW-FLOW FIXTURES WILL BE INSTALLED TO COMPLY WITH THE PROJECT'S CALGREEN AND GREENPOINT REQUIREMENTS.

GAS SERVICE: THE PROJECT WILL NOT HAVE ANY GAS SERVICE.

VAN METER WILLIAMS POLLACK LLP
ARCHITECTURE | URBAN DESIGN ■ SAN FRANCISCO | DENVER | MINNEAPOLIS
333 Bryant Street, Suite 300, San Francisco, CA 94107 T 415.974.5252

☐ **CIVIL ENGINEER**

BKF - SAN JOSE
1730 N. FIRST ST. STE 600
SAN JOSE, CA 95112

☐ **LANDSCAPE ARCHITECT**

PLURAL STUDIO
2742 17TH STREET
SAN FRANCISCO, CA 94110

☐ **STRUCTURAL ENGINEER**

HOHBACH-LEWIN
250 SHERIDAN AVE STE 100
PALO ALTO, CA 94306

☐ **MEP ENGINEER**

EMERALD CITY ENGINEERS
21705 HIGHWAY 99
LYNWOOD, WA 98036

☐ **SUSTAINABILITY/ENERGY**

REDWOOD ENERGY
1887 Q STREET
ARCATA, CA 95521

EMERALD CITY ENGINEERS, INC
21705 Highway 99
Lynnwood, WA 98036
TEL: 425-741-1200

REGISTERED PROFESSIONAL ENGINEER
MASSAMAGHAN KONGKEO
No. 36866
EXP: 03-31-24
MECHANICAL
STATE OF CALIFORNIA

07/27/23

ID	DATE	NAME
1	11/11/22	PERMIT SET - CONV
A	12/16/22	BID SET
B	03/20/23	BID ADDENDUM SET
2	03/20/23	PLAN CHECK COMMENT RESPONSES SET
3	05/18/23	PLAN CHECK COMMENT RESPONSES SET
3	06/12/23	GRADING PERMIT
4	07/27/23	BUILDING RESUBMITTAL

Project:

EDUCATOR HOUSING
231 GRANT AVENUE

231 GRANT AVENUE
PALO ALTO, CA 94306

Client:

MERCY HOUSING/
ABODE COMMUNITIES

NOTES

COUNTY OF SANTA CLARA
BUILDING INSPECTION OFFICE
PLANS APPROVED FOR PERMIT

RECORD NO.: DEV22-1242

BY: Warren Krause Date: 7/28/2023

HARD COPY OF THESE STAMPED PLANS MUST BE ON THE SITE FOR INSPECTIONS

JOB #: 2293-007

SCALE:

P0.03

GRADING PERMIT | DATE: 06/12/2023

COPYRIGHT 2023, EMERALD CITY ENGINEERS, INC.
X:\PROJECTS\2293-007 231 GRANT, PALO ALTO, CA\DWG\P003.DWG 03-16-2023 10:07

CONDENSATE PIPE SIZING (2019 CPC – TABLE 814.3)	
EQUIP CAPACITY IN TONS OF REFRIGERATION	MIN CONDENSATE PIPE DIAMETER IN INCHES
UP TO 20	3/4
21–40	1
41–90	1–1/4
91–125	1–1/2
126–250	2

STORM DRAIN SIZING NOTE

SIZE STORM DRAIN PIPING PER 2019 CPC TABLE 1103.2, AT THE FOLLOWING SLOPES AND AND RAINFALL RATES:

SLOPE = ⅛" PER FOOT

PIPE SIZE	2" PER HOUR	4" PER HOUR
3"	1,644 SF	1,096 SF
4"	3,760 SF	2,507 SF
6"	10,700 SF	7,134 SF
8"	23,000 SF	15,334 SF
10"	41,400 SF	27,600 SF
12"	88,800 SF	44,400 SF
15"	158,667 SF	79,334 SF

VERTICAL RAIN WATER PIPING:

PIPE SIZE	4" PER HOUR
3"	1,096 SF
4"	2,507 SF
6"	7,134 SF
8"	15,334 SF

FLAG NOTES:

1. MECHANICAL EQUIPMENT REF.
2. CONDENSATE TO INDIRECT DRAIN
3. ¾" CONDENSATE DOWN
4. DAYLIGHT RAIN LEADER ABOVE FLOW THRU PLANTER
5. TRANSITION PUMPED WASTE TO GRAVITY
6. CONDENSATE TO LANDSCAPE
7. PROVIDE FLOW SWITCHES AT SECONDARY OVERFLOW DRAIN
8. PROVIDE 4" WASTE (40 DFU) FOR FUTURE RETAIL
9. PROVIDE 3" VENT
10. PROVIDE CONDENSATE PUMP

PLAN NOTES:

1. DOWNSPOUTS MAY BE ROUND, SQUARE, OR RECTANGULAR. SQUARE PIPE SHALL BE SIZED TO ENCLOSE ITS EQUIVALENT ROUND PIPE. RECTANGULAR PIPE SHALL HAVE AT LEAST THE SAME CROSS-SECTIONAL AREA AS ITS EQUIVALENT ROUND PIPE. REF. ARCH DRAWINGS FOR DETAILS.
2. ALL HORIZONTAL WASTE PIPING 4" AND LARGER SHALL SLOPE ⅛" PER L.F. MINIMUM.
3. PROVIDE CONDENSATE PIPING FROM MECHANICAL EQUIPMENT AND DISCHARGE AT INDIRECT DRAIN OR TAILPIECE OF LAVATORY/SINK. CONDENSATE SLOPES AT 1/8" PER FOOT PER CPC SECTION 814.1. REFER TO MECHANICAL PLANS FOR EQUIPMENT LOCATIONS. SIZE CONDENSATE PIPING PER CPC TABLE 814.3:
4. PROVIDE CLEANOUTS PER 2019 CPC 707.0 AND AS REQUIRED BY LOCAL JURISDICTIONS. EACH HORIZONTAL DRAINAGE PIPE SHALL BE PROVIDED HORIZONTAL DRAINAGE PIPE SHALL BE PROVIDED WITH A CLEANOUT AT ITS UPPER TERMINAL, AND EACH RUN THAT IS MORE THAN 100 FEET OF TOTAL DEVELOPED LENGTH. AN ADDITIONAL CLEANOUT SHALL BE PROVIDED IN DRAINAGE LINES FOR EACH AGGREGATE HORIZONTAL CHANGE IN DIRECTION EXCEEDING CURRENT CODE. CLEANOUTS SHALL BE THE SAME SIZE AS THE PIPING SERVED BY THE CLEANOUT, UP TO 4 INCHES. CLEANOUTS SERVING GREASE WASTE LINES SHALL BE PROVIDED AT EACH SECTION 50 FEET OF TOTAL DEVELOPED LENGTH. CLEANOUTS SHALL BE LOCATED IN WALLS/FLOORS WHERE THEY ARE NOT HIGHLY VISIBLE. FLOOR FLOOR CLEANOUTS IN CARPETED AREAS ARE TO FLOOR CLEANOUTS IN CARPETED AREAS ARE TO BE FITTED WITH CARPET INSERTS. LOCATIONS SHALL BE SUBMITTED TO THE ARCHITECT FOR APPROVAL. SEE DETAIL 7 ON SHEET P4.02 FOR CLEANOUT DETAILS. NOTE: NOT ALL CLEANOUTS ARE SHOWN ON THE PLUMBING DRAWINGS.
5. RAIN LEADERS AND CONDUCTORS CONNECTED TO A BUILDING STORM DRAIN SHALL HAVE A CLEANOUT INSTALLED AT THE BASE OF THE LEADER IT CONNECTS TO THE HORIZONTAL DRAIN. CPC 1101.13
6. SANITARY SEWER UPSTREAM MANHOLE RIM ELEVATION: 28.74' STORM SEWER UPSTREAM MANHOLE RIM ELEVATION: 28.50'

◇ = WATER SUPPLY RISER IDENTIFICATION (RISER "B", FOR EXAMPLE). REFER TO DWG P4.00 FOR RISER DETAILS/ PIPE SIZES.

(1) = WASTE/VENT RISER IDENTIFICATION (RISER "5", FOR EXAMPLE). REFER TO DWG P4.00 FOR RISER DETAILS/ PIPE SIZES.

STUDIO = UNIT TYPE (UNIT TYPE STUDIO A FOR EXAMPLE).

1 / P4.00 = ENLARGED PLAN. FOR EXAMPLE, REFER TO DETAIL 1 ON SHEET P3.01

FOR WATER SUPPLY AND WASTE PIPING WITHIN UNITS, REFER TO ENLARGED UNIT PLANS ON SHEETS P3.01–P3.03

ALL FLOOR DRAINS CONNECTED TO THE SANITARY SEWER SYSTEM TO BE PROPERLY TRAPPED, VENTED AND EQUIPPED WITH TRAP PRIMERS.

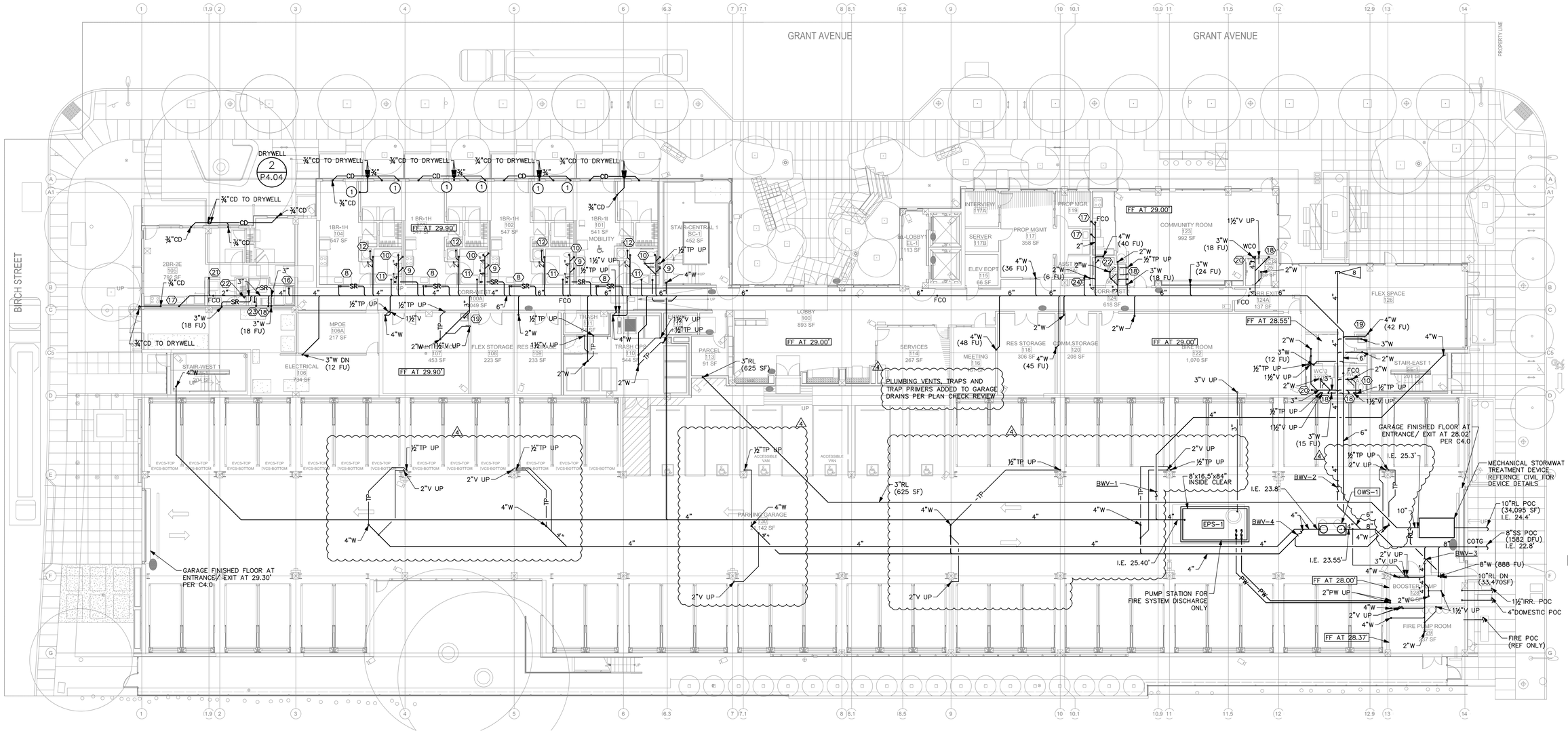

UNDERSLAB PLAN

SCALE: 3/32" = 1'-0"

COUNTY OF SANTA CLARA
BUILDING INSPECTION OFFICE
PLANS APPROVED FOR PERMIT

RECORD NO.: DEV22-1242

BY: Warren Krause Date: 7/28/2023

HARD COPY OF THESE STAMPED PLANS MUST BE ON THE SITE FOR INSPECTIONS

COPYRIGHT 2023, EMERALD CITY ENGINEERS, INC.
KSTEPHENS J:\2293-007 231 GRANT, PALO ALTO, CA\DWG\P200 UNDERSLABLONG 06-06-2023 16:11

VAN METER WILLIAMS POLLACK LLP
ARCHITECTURE | URBAN DESIGN ■ SAN FRANCISCO | DENVER | MINNEAPOLIS
333 Bryant Street, Suite 300, San Francisco, CA 94107 T 415.974.5252

☐ CIVIL ENGINEER
BKF - SAN JOSE
1730 N. FIRST ST. STE 600
SAN JOSE, CA 95112

☐ LANDSCAPE ARCHITECT
PLURAL STUDIO
2742 17TH STREET
SAN FRANCISCO, CA 94110

☐ STRUCTURAL ENGINEER
HOHBACH-LEWIN
250 SHERIDAN AVE STE 100
PALO ALTO, CA 94306

☐ MEP ENGINEER
EMERALD CITY ENGINEERS
21705 HIGHWAY 99
LYNWOOD, WA 98036

☐ SUSTAINABILITY/ENERGY
REDWOOD ENERGY
1887 Q STREET
ARCATA, CA 95521

EMERALD CITY ENGINEERS, INC
21705 Highway 99
Lynnwood, WA 98036
TEL: 425-741-1200

REGISTERED PROFESSIONAL ENGINEER MASSAMAGHAN KOHEN STEPHENS No. 22826 EXP: 03-31-24 MECHANICAL STATE OF CALIFORNIA
07/27/23

ID	DATE	NAME
1	11/11/22	PERMIT SET - CONV
A	12/16/22	BID SET
B	03/20/23	BID ADDENDUM SET
2	03/20/23	PLAN CHECK COMMENT RESPONSES SET
3	05/18/23	PLAN CHECK COMMENT RESPONSES SET
3	06/12/23	GRADING PERMIT
4	07/27/23	BUILDING RESUBMITTAL

Project:

EDUCATOR HOUSING
231 GRANT AVENUE

231 GRANT AVENUE
PALO ALTO, CA 94306

Client:

MERCY HOUSING/
ABODE COMMUNITIES

UNDERSLAB PLAN

JOB #: 2293-007

SCALE:

P2.00

GRADING PERMIT | DATE: 06/12/2023

STORM DRAIN SIZING NOTE

SIZE STORM DRAIN PIPING PER 2019 CPC TABLE 1103.2, AT THE FOLLOWING SLOPES AND AND RAINFALL RATES:

SLOPE = ⅛" PER FOOT

PIPE SIZE	2" PER HOUR	4" PER HOUR
3"	1,644 SF	1,096 SF
4"	3,760 SF	2,507 SF
6"	10,700 SF	7,134 SF
8"	23,000 SF	15,334 SF
10"	41,400 SF	27,600 SF
12"	88,800 SF	44,400 SF
15"	158,667 SF	79,334 SF

VERTICAL RAIN WATER PIPING:

PIPE SIZE	4" PER HOUR
3"	1,096 SF
4"	2,507 SF
6"	7,134 SF
8"	15,334 SF

FLAG NOTES:

1. MECHANICAL EQUIPMENT REF.
2. CONDENSATE TO INDIRECT DRAIN
3. ¾" CONDENSATE DOWN
4. DAYLIGHT RAIN LEADER ABOVE FLOW THRU PLANTER
5. TRANSITION PUMPED WASTE TO GRAVITY
6. CONDENSATE TO LANDSCAPE
7. PROVIDE FLOW SWITCHES AT SECONDARY OVERFLOW DRAIN
8. PROVIDE 4" WASTE (40 DFU) FOR FUTURE RETAIL
9. PROVIDE 3" VENT
10. PROVIDE CONDENSATE PUMP

PLAN NOTES:

1. DOWNSPOUTS MAY BE ROUND, SQUARE, OR RECTANGULAR. SQUARE PIPE SHALL BE SIZED TO ENCLOSE ITS EQUIVALENT ROUND PIPE. RECTANGULAR PIPE SHALL HAVE AT LEAST THE SAME CROSS-SECTIONAL AREA AS ITS EQUIVALENT ROUND PIPE. REF. ARCH DRAWINGS FOR DETAILS.
2. ALL HORIZONTAL WASTE PIPING 4" AND LARGER SHALL SLOPE ⅛" PER L.F. MINIMUM.
3. PROVIDE CONDENSATE PIPING FROM MECHANICAL EQUIPMENT AND DISCHARGE AT INDIRECT DRAIN OR TAILPIECE OF LAVATORY/SINK. CONDENSATE SLOPES AT 1/8" PER FOOT PER CPC SECTION 814.1. REFER TO MECHANICAL PLANS FOR EQUIPMENT LOCATIONS. SIZE CONDENSATE PIPING PER CPC TABLE 814.3:

CONDENSATE PIPE SIZING (2019 CPC – TABLE 814.3)	
EQUIP CAPACITY IN TONS OF REFRIGERATION	MIN CONDENSATE PIPE DIAMETER IN INCHES
UP TO 20	3/4
21–40	1
41–90	1–1/4
91–125	1–1/2
126–250	2

◇ = WATER SUPPLY RISER IDENTIFICATION (RISER "B", FOR EXAMPLE). REFER TO DWG P4.00 FOR RISER DETAILS/ PIPE SIZES.

(1) = WASTE/VENT RISER IDENTIFICATION (RISER "5", FOR EXAMPLE). REFER TO DWG P4.00 FOR RISER DETAILS/ PIPE SIZES.

STUDIO = UNIT TYPE (UNIT TYPE STUDIO A FOR EXAMPLE).

1 / P4.00 = ENLARGED PLAN. FOR EXAMPLE, REFER TO DETAIL 1 ON SHEET P3.01

FOR WATER SUPPLY AND WASTE PIPING WITHIN UNITS, REFER TO ENLARGED UNIT PLANS ON SHEETS P3.01–P3.03

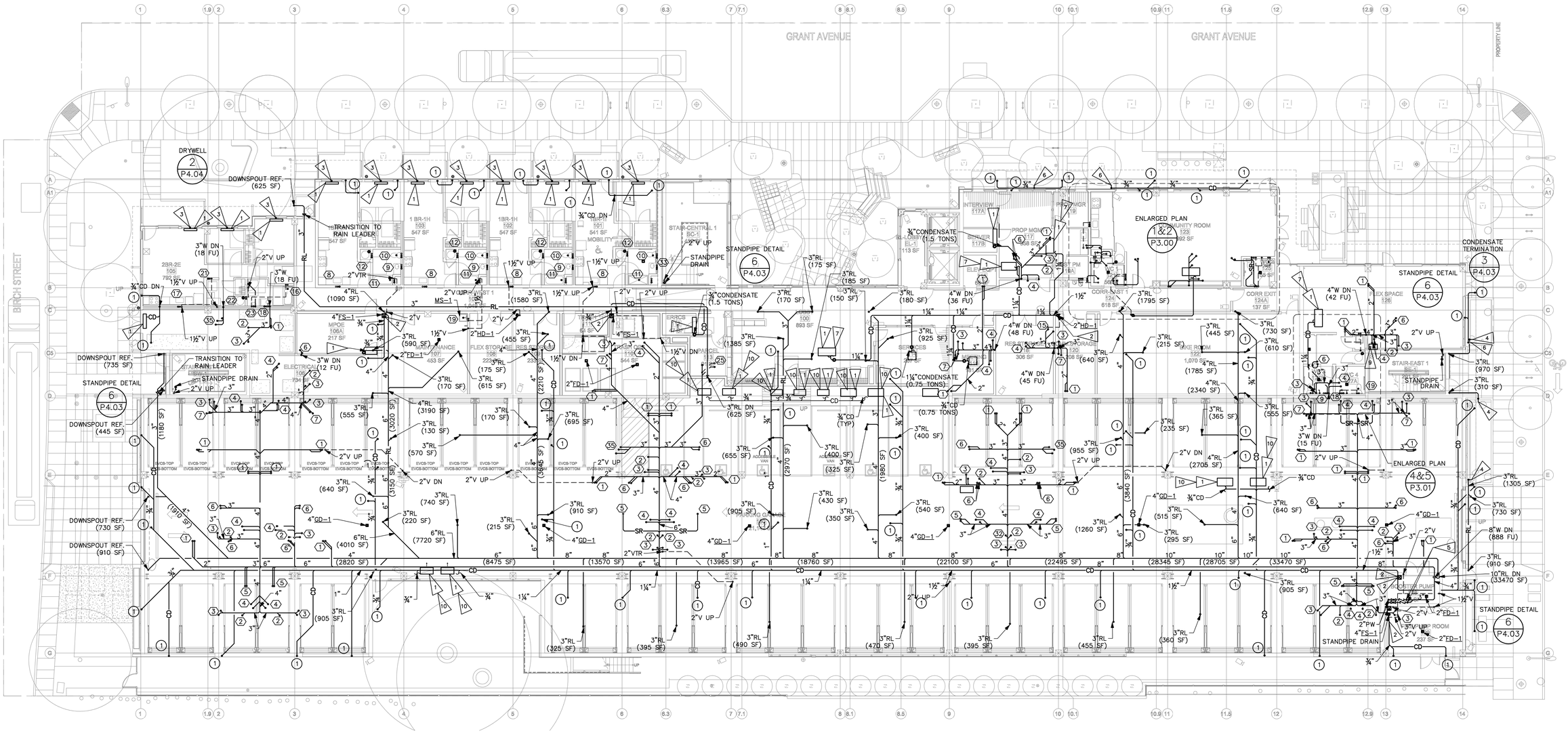
GRANT AVENUE
GRANT AVENUE
PROPERTY LINE
BIRCH STREET
DRYWELL
2 / P4.04
DOWNSPOUT REF. (625 SF)
TRANSITION TO RAIN LEADER
STANDPIPE DETAIL
6 / P4.03
STANDPIPE DRAIN
DOWNSPOUT REF. (735 SF)
DOWNSPOUT REF. (445 SF)
DOWNSPOUT REF. (730 SF)
DOWNSPOUT REF. (910 SF)
ENLARGED PLAN
1&2 / P3.00
CONDENSATE TERMINATION
3 / P4.03
ENLARGED PLAN
485 / P3.01
1 BR-1H 103 547 SF
1BR-1H 102 547 SF
1 BR-1H 101 541 SF
2BR-2E 105 792 SF
STAIR-CENTRAL 1 SC-1
ELEV-1 113 SF
INTERVIEW 117A
SERVER 117B
PROP MGMT 117
968 SF
LOBBY 119
COMMUNITY ROOM 123 1,092 SF
CORR EAST 1 124 618 SF
CORR EXIT 124A 137 SF
EX SPACE 126
STAIR-EAST 1 SC-1
MPOE 106A 217 SF
ELECTRICAL 106 734 SF
MAINTENANCE 107 453 SF
FLEX STORAGE 108 229 SF
RES STORAGE 109 233 SF
RETAIL 110 544 SF
ERRCS 111 64 SF
100 893 SF
SERVICES 201 SF
STORAGE 120 308 SF
BIKE ROOM 122 1,070 SF
SHAFT PM 118A
SHAFT PM 118B
SHAFT PM 118C
SHAFT PM 118D
SHAFT PM 118E
SHAFT PM 118F
SHAFT PM 118G
SHAFT PM 118H
SHAFT PM 118I
SHAFT PM 118J
SHAFT PM 118K
SHAFT PM 118L
SHAFT PM 118M
SHAFT PM 118N
SHAFT PM 118O
SHAFT PM 118P
SHAFT PM 118Q
SHAFT PM 118R
SHAFT PM 118S
SHAFT PM 118T
SHAFT PM 118U
SHAFT PM 118V
SHAFT PM 118W
SHAFT PM 118X
SHAFT PM 118Y
SHAFT PM 118Z
SHAFT PM 118AA
SHAFT PM 118AB
SHAFT PM 118AC
SHAFT PM 118AD
SHAFT PM 118AE
SHAFT PM 118AF
SHAFT PM 118AG
SHAFT PM 118AH
SHAFT PM 118AI
SHAFT PM 118AJ
SHAFT PM 118AK
SHAFT PM 118AL
SHAFT PM 118AM
SHAFT PM 118AN
SHAFT PM 118AO
SHAFT PM 118AP
SHAFT PM 118AQ
SHAFT PM 118AR
SHAFT PM 118AS
SHAFT PM 118AT
SHAFT PM 118AU
SHAFT PM 118AV
SHAFT PM 118AW
SHAFT PM 118AX
SHAFT PM 118AY
SHAFT PM 118AZ
SHAFT PM 118BA
SHAFT PM 118BB
SHAFT PM 118BC
SHAFT PM 118BD
SHAFT PM 118BE
SHAFT PM 118BF
SHAFT PM 118BG
SHAFT PM 118BH
SHAFT PM 118BI
SHAFT PM 118BJ
SHAFT PM 118BK
SHAFT PM 118BL
SHAFT PM 118BM
SHAFT PM 118BN
SHAFT PM 118BO
SHAFT PM 118BP
SHAFT PM 118BQ
SHAFT PM 118BR
SHAFT PM 118BS
SHAFT PM 118BT
SHAFT PM 118BU
SHAFT PM 118BV
SHAFT PM 118BW
SHAFT PM 118BX
SHAFT PM 118BY
SHAFT PM 118BZ
SHAFT PM 118CA
SHAFT PM 118CB
SHAFT PM 118CC
SHAFT PM 118CD
SHAFT PM 118CE
SHAFT PM 118CF
SHAFT PM 118CG
SHAFT PM 118CH
SHAFT PM 118CI
SHAFT PM 118CJ
SHAFT PM 118CK
SHAFT PM 118CL
SHAFT PM 118CM
SHAFT PM 118CN
SHAFT PM 118CO
SHAFT PM 118CP
SHAFT PM 118CQ
SHAFT PM 118CR
SHAFT PM 118CS
SHAFT PM 118CT
SHAFT PM 118CU
SHAFT PM 118CV
SHAFT PM 118CW
SHAFT PM 118CX
SHAFT PM 118CY
SHAFT PM 118CZ
SHAFT PM 118DA
SHAFT PM 118DB
SHAFT PM 118DC
SHAFT PM 118DD
SHAFT PM 118DE
SHAFT PM 118DF
SHAFT PM 118DG
SHAFT PM 118DH
SHAFT PM 118DI
SHAFT PM 118DJ
SHAFT PM 118DK
SHAFT PM 118DL
SHAFT PM 118DM
SHAFT PM 118DN
SHAFT PM 118DO
SHAFT PM 118DP
SHAFT PM 118DQ
SHAFT PM 118DR
SHAFT PM 118DS
SHAFT PM 118DT
SHAFT PM 118DU
SHAFT PM 118DV
SHAFT PM 118DW
SHAFT PM 118DX
SHAFT PM 118DY
SHAFT PM 118DZ
SHAFT PM 118EA
SHAFT PM 118EB
SHAFT PM 118EC
SHAFT PM 118ED
SHAFT PM 118EE
SHAFT PM 118EF
SHAFT PM 118EG
SHAFT PM 118EH
SHAFT PM 118EI
SHAFT PM 118EJ
SHAFT PM 118EK
SHAFT PM 118EL
SHAFT PM 118EM
SHAFT PM 118EN
SHAFT PM 118EO
SHAFT PM 118EP
SHAFT PM 118EQ
SHAFT PM 118ER
SHAFT PM 118ES
SHAFT PM 118ET
SHAFT PM 118EU
SHAFT PM 118EV
SHAFT PM 118EW
SHAFT PM 118EX
SHAFT PM 118EY
SHAFT PM 118EZ
SHAFT PM 118FA
SHAFT PM 118FB
SHAFT PM 118FC
SHAFT PM 118FD
SHAFT PM 118FE
SHAFT PM 118FF
SHAFT PM 118FG
SHAFT PM 118FH
SHAFT PM 118FI
SHAFT PM 118FJ
SHAFT PM 118FK
SHAFT PM 118FL
SHAFT PM 118FM
SHAFT PM 118FN
SHAFT PM 118FO
SHAFT PM 118FP
SHAFT PM 118FQ
SHAFT PM 118FR
SHAFT PM 118FS
SHAFT PM 118FT
SHAFT PM 118FU
SHAFT PM 118FV
SHAFT PM 118FW
SHAFT PM 118FX
SHAFT PM 118FY
SHAFT PM 118FZ
SHAFT PM 118GA
SHAFT PM 118GB
SHAFT PM 118GC
SHAFT PM 118GD
SHAFT PM 118GE
SHAFT PM 118GF
SHAFT PM 118GG
SHAFT PM 118GH
SHAFT PM 118GI
SHAFT PM 118GJ
SHAFT PM 118GK
SHAFT PM 118GL
SHAFT PM 118GM
SHAFT PM 118GN
SHAFT PM 118GO
SHAFT PM 118GP
SHAFT PM 118GQ
SHAFT PM 118GR
SHAFT PM 118GS
SHAFT PM 118GT
SHAFT PM 118GU
SHAFT PM 118GV
SHAFT PM 118GW
SHAFT PM 118GX
SHAFT PM 118GY
SHAFT PM 118GZ
SHAFT PM 118HA
SHAFT PM 118HB
SHAFT PM 118HC
SHAFT PM 118HD
SHAFT PM 118HE
SHAFT PM 118HF
SHAFT PM 118HG
SHAFT PM 118HH
SHAFT PM 118HI
SHAFT PM 118HJ
SHAFT PM 118HK
SHAFT PM 118HL
SHAFT PM 118HM
SHAFT PM 118HN
SHAFT PM 118HO
SHAFT PM 118HP
SHAFT PM 118HQ
SHAFT PM 118HR
SHAFT PM 118HS
SHAFT PM 118HT
SHAFT PM 118HU
SHAFT PM 118HV
SHAFT PM 118HW
SHAFT PM 118HX
SHAFT PM 118HY
SHAFT PM 118HZ
SHAFT PM 118IA
SHAFT PM 118IB
SHAFT PM 118IC
SHAFT PM 118ID
SHAFT PM 118IE
SHAFT PM 118IF
SHAFT PM 118IG
SHAFT PM 118IH
SHAFT PM 118II
SHAFT PM 118IJ
SHAFT PM 118IK
SHAFT PM 118IL
SHAFT PM 118IM
SHAFT PM 118IN
SHAFT PM 118IO
SHAFT PM 118IP
SHAFT PM 118IQ
SHAFT PM 118IR
SHAFT PM 118IS
SHAFT PM 118IT
SHAFT PM 118IU
SHAFT PM 118IV
SHAFT PM 118IW
SHAFT PM 118IX
SHAFT PM 118IY
SHAFT PM 118IZ
SHAFT PM 118JA
SHAFT PM 118JB
SHAFT PM 118JC
SHAFT PM 118JD
SHAFT PM 118JE
SHAFT PM 118JF
SHAFT PM 118JG
SHAFT PM 118JH
SHAFT PM 118JI
SHAFT PM 118JJ
SHAFT PM 118JK
SHAFT PM 118JL
SHAFT PM 118JM
SHAFT PM 118JN
SHAFT PM 118JO
SHAFT PM 118JP
SHAFT PM 118JQ
SHAFT PM 118JR
SHAFT PM 118JS
SHAFT PM 118JT
SHAFT PM 118JU
SHAFT PM 118JV
SHAFT PM 118JW
SHAFT PM 118JX
SHAFT PM 118JY
SHAFT PM 118JZ
SHAFT PM 118KA
SHAFT PM 118KB
SHAFT PM 118KC
SHAFT PM 118KD
SHAFT PM 118KE
SHAFT PM 118KF
SHAFT PM 118KG
SHAFT PM 118KH
SHAFT PM 118KI
SHAFT PM 118KJ
SHAFT PM 118KK
SHAFT PM 118KL
SHAFT PM 118KM
SHAFT PM 118KN
SHAFT PM 118KO
SHAFT PM 118KP
SHAFT PM 118KQ
SHAFT PM 118KR
SHAFT PM 118KS
SHAFT PM 118KT
SHAFT PM 118KU
SHAFT PM 118KV
SHAFT PM 118KW
SHAFT PM 118KX
SHAFT PM 118KY
SHAFT PM 118KZ
SHAFT PM 118LA
SHAFT PM 118LB
SHAFT PM 118LC
SHAFT PM 118LD
SHAFT PM 118LE
SHAFT PM 118LF
SHAFT PM 118LG
SHAFT PM 118LH
SHAFT PM 118LI
SHAFT PM 118LJ
SHAFT PM 118LK
SHAFT PM 118LL
SHAFT PM 118LM
SHAFT PM 118LN
SHAFT PM 118LO
SHAFT PM 118LP
SHAFT PM 118LQ
SHAFT PM 118LR
SHAFT PM 118LS
SHAFT PM 118LT
SHAFT PM 118LU
SHAFT PM 118LV
SHAFT PM 118LW
SHAFT PM 118LX
SHAFT PM 118LY
SHAFT PM 118LZ
SHAFT PM 118MA
SHAFT PM 118MB
SHAFT PM 118MC
SHAFT PM 118MD
SHAFT PM 118ME
SHAFT PM 118MF
SHAFT PM 118MG
SHAFT PM 118MH
SHAFT PM 118MI
SHAFT PM 118MJ
SHAFT PM 118MK
SHAFT PM 118ML
SHAFT PM 118MM
SHAFT PM 118MN
SHAFT PM 118MO
SHAFT PM 118MP
SHAFT PM 118MQ
SHAFT PM 118MR
SHAFT PM 118MS
SHAFT PM 118MT
SHAFT PM 118MU
SHAFT PM 118MV
SHAFT PM 118MW
SHAFT PM 118MX
SHAFT PM 118MY
SHAFT PM 118MZ
SHAFT PM 118NA
SHAFT PM 118NB
SHAFT PM 118NC
SHAFT PM 118ND
SHAFT PM 118NE
SHAFT PM 118NF
SHAFT PM 118NG
SHAFT PM 118NH
SHAFT PM 118NI
SHAFT PM 118NJ
SHAFT PM 118NK
SHAFT PM 118NL
SHAFT PM 118NM
SHAFT PM 118NN
SHAFT PM 118NO
SHAFT PM 118NP
SHAFT PM 118NQ
SHAFT PM 118NR
SHAFT PM 118NS
SHAFT PM 118NT
SHAFT PM 118NU
SHAFT PM 118NV
SHAFT PM 118NW
SHAFT PM 118NX
SHAFT PM 118NY
SHAFT PM 118NZ
SHAFT PM 118OA
SHAFT PM 118OB
SHAFT PM 118OC
SHAFT PM 118OD
SHAFT PM 118OE
SHAFT PM 118OF
SHAFT PM 118OG
SHAFT PM 118OH
SHAFT PM 118OI
SHAFT PM 118OJ
SHAFT PM 118OK
SHAFT PM 118OL
SHAFT PM 118OM
SHAFT PM 118ON
SHAFT PM 118OO
SHAFT PM 118OP
SHAFT PM 118OQ
SHAFT PM 118OR
SHAFT PM 118OS
SHAFT PM 118OT
SHAFT PM 118OU
SHAFT PM 118OV
SHAFT PM 118OW
SHAFT PM 118OX
SHAFT PM 118OY
SHAFT PM 118OZ
SHAFT PM 118PA
SHAFT PM 118PB
SHAFT PM 118PC
SHAFT PM 118PD
SHAFT PM 118PE
SHAFT PM 118PF
SHAFT PM 118PG
SHAFT PM 118PH
SHAFT PM 118PI
SHAFT PM 118PJ
SHAFT PM 118PK
SHAFT PM 118PL
SHAFT PM 118PM
SHAFT PM 118PN
SHAFT PM 118PO
SHAFT PM 118PP
SHAFT PM 118PQ
SHAFT PM 118PR
SHAFT PM 118PS
SHAFT PM 118PT
SHAFT PM 118PU
SHAFT PM 118PV
SHAFT PM 118PW
SHAFT PM 118PX
SHAFT PM 118PY
SHAFT PM 118PZ
SHAFT PM 118QA
SHAFT PM 118QB
SHAFT PM 118QC
SHAFT PM 118QD
SHAFT PM 118QE
SHAFT PM 118QF
SHAFT PM 118QG
SHAFT PM 118QH
SHAFT PM 118QI
SHAFT PM 118QJ
SHAFT PM 118QK
SHAFT PM 118QL
SHAFT PM 118QM
SHAFT PM 118QN
SHAFT PM 118QO
SHAFT PM 118QP
SHAFT PM 118QQ
SHAFT PM 118QR
SHAFT PM 118QS
SHAFT PM 118QT
SHAFT PM 118QU
SHAFT PM 118QV
SHAFT PM 118QW
SHAFT PM 118QX
SHAFT PM 118QY
SHAFT PM 118QZ
SHAFT PM 118RA
SHAFT PM 118RB
SHAFT PM 118RC
SHAFT PM 118RD
SHAFT PM 118RE
SHAFT PM 118RF
SHAFT PM 118RG
SHAFT PM 118RH
SHAFT PM 118RI
SHAFT PM 118RJ
SHAFT PM 118RK
SHAFT PM 118RL
SHAFT PM 118RM
SHAFT PM 118RN
SHAFT PM 118RO
SHAFT PM 118RP
SHAFT PM 118RQ
SHAFT PM 118RR
SHAFT PM 118RS
SHAFT PM 118RT
SHAFT PM 118RU
SHAFT PM 118RV
SHAFT PM 118RW
SHAFT PM 118RX
SHAFT PM 118RY
SHAFT PM 118RZ
SHAFT PM 118SA
SHAFT PM 118SB
SHAFT PM 118SC
SHAFT PM 118SD
SHAFT PM 118SE
SHAFT PM 118SF
SHAFT PM 118SG
SHAFT PM 118SH
SHAFT PM 118SI
SHAFT PM 118SJ
SHAFT PM 118SK
SHAFT PM 118SL
SHAFT PM 118SM
SHAFT PM 118SN
SHAFT PM 118SO
SHAFT PM 118SP
SHAFT PM 118SQ
SHAFT PM 118SR
SHAFT PM 118SS
SHAFT PM 118ST
SHAFT PM 118SU
SHAFT PM 118SV
SHAFT PM 118SW
SHAFT PM 118SX
SHAFT PM 118SY
SHAFT PM 118SZ
SHAFT PM 118TA
SHAFT PM 118TB
SHAFT PM 118TC
SHAFT PM 118TD
SHAFT PM 118TE
SHAFT PM 118TF
SHAFT PM 118TG
SHAFT PM 118TH
SHAFT PM 118TI
SHAFT PM 118TJ
SHAFT PM 118TK
SHAFT PM 118TL
SHAFT PM 118TM
SHAFT PM 118TN
SHAFT PM 118TO
SHAFT PM 118TP
SHAFT PM 118TQ
SHAFT PM 118TR
SHAFT PM 118TS
SHAFT PM 118TT
SHAFT PM 118TU
SHAFT PM 118TV
SHAFT PM 118TW
SHAFT PM 118TX
SHAFT PM 118TY
SHAFT PM 118TZ
SHAFT PM 118UA
SHAFT PM 118UB
SHAFT PM 118UC
SHAFT PM 118UD
SHAFT PM 118UE
SHAFT PM 118UF
SHAFT PM 118UG
SHAFT PM 118UH
SHAFT PM 118UI
SHAFT PM 118UJ
SHAFT PM 118UK
SHAFT PM 118UL
SHAFT PM 118UM
SHAFT PM 118UN
SHAFT PM 118UO
SHAFT PM 118UP
SHAFT PM 118UQ
SHAFT PM 118UR
SHAFT PM 118US
SHAFT PM 118UT
SHAFT PM 118UU
SHAFT PM 118UV
SHAFT PM 118UW
SHAFT PM 118UX
SHAFT PM 118UY
SHAFT PM 118UZ
SHAFT PM 118VA
SHAFT PM 118VB
SHAFT PM 118VC
SHAFT PM 118VD
SHAFT PM 118VE
SHAFT PM 118VF
SHAFT PM 118VG
SHAFT PM 118VH
SHAFT PM 118VI
SHAFT PM 118VJ
SHAFT PM 118VK
SHAFT PM 118VL
SHAFT PM 118VM
SHAFT PM 118VN
SHAFT PM 118VO
SHAFT PM 118VP
SHAFT PM 118VQ
SHAFT PM 118VR
SHAFT PM 118VS
SHAFT PM 118VT
SHAFT PM 118VU
SHAFT PM 118VV
SHAFT PM 118VW
SHAFT PM 118VX
SHAFT PM 118VY
SHAFT PM 118VZ
SHAFT PM 118WA
SHAFT PM 118WB
SHAFT PM 118WC
SHAFT PM 118WD
SHAFT PM 118WE
SHAFT PM 118WF
SHAFT PM 118WG
SHAFT PM 118WH
SHAFT PM 118WI
SHAFT PM 118WJ
SHAFT PM 118WK
SHAFT PM 118WL
SHAFT PM 118WM
SHAFT PM 118WN
SHAFT PM 118WO
SHAFT PM 118WP
SHAFT PM 118WQ
SHAFT PM 118WR
SHAFT PM 118WS
SHAFT PM 118WT
SHAFT PM 118WU
SHAFT PM 118WV
SHAFT PM 118WW
SHAFT PM 118WX
SHAFT PM 118WY
SHAFT PM 118WZ
SHAFT PM 118XA
SHAFT PM 118XB
SHAFT PM 118XC
SHAFT PM 118XD
SHAFT PM 118XE
SHAFT PM 118XF
SHAFT PM 118XG
SHAFT PM 118XH
SHAFT PM 118XI
SHAFT PM 118XJ
SHAFT PM 118XK
SHAFT PM 118XL
SHAFT PM 118XM
SHAFT PM 118XN
SHAFT PM 118XO
SHAFT PM 118XP
SHAFT PM 118XQ
SHAFT PM 118XR
SHAFT PM 118XS
SHAFT PM 118XT
SHAFT PM 118XU
SHAFT PM 118XV
SHAFT PM 118XW
SHAFT PM 118XX
SHAFT PM 118XY
SHAFT PM 118XZ
SHAFT PM 118YA
SHAFT PM 118YB
SHAFT PM 118YC
SHAFT PM 118YD
SHAFT PM 118YE
SHAFT PM 118YF
SHAFT PM 118YG
SHAFT PM 118YH
SHAFT PM 118YI
SHAFT PM 118YJ
SHAFT PM 118YK
SHAFT PM 118YL
SHAFT PM 118YM
SHAFT PM 118YN
SHAFT PM 118YO
SHAFT PM 118YP
SHAFT PM 118YQ
SHAFT PM 118YR
SHAFT PM 118YS
SHAFT PM 118YT
SHAFT PM 118YU
SHAFT PM 118YV
SHAFT PM 118YW
SHAFT PM 118YX
SHAFT PM 118YY
SHAFT PM 118YZ
SHAFT PM 118ZA
SHAFT PM 118ZB
SHAFT PM 118ZC
SHAFT PM 118ZD
SHAFT PM 118ZE
SHAFT PM 118ZF
SHAFT PM 118ZG
SHAFT PM 118ZH
SHAFT PM 118ZI
SHAFT PM 118ZJ
SHAFT PM 118ZK
SHAFT PM 118ZL
SHAFT PM 118ZM
SHAFT PM 118ZN
SHAFT PM 118ZO
SHAFT PM 118ZP
SHAFT PM 118ZQ
SHAFT PM 118ZR
SHAFT PM 118ZS
SHAFT PM 118ZT
SHAFT PM 118ZU
SHAFT PM 118ZV
SHAFT PM 118ZW
SHAFT PM 118ZX
SHAFT PM 118ZY
SHAFT PM 118ZZ
SHAFT PM 118AAA
SHAFT PM 118AAB
SHAFT PM 118AAC
SHAFT PM 118AAD
SHAFT PM 118AAE
SHAFT PM 118AAF
SHAFT PM 118AAG
SHAFT PM 118AAH
SHAFT PM 118AAI
SHAFT PM 118AAJ
SHAFT PM 118AAK
SHAFT PM 118AAL
SHAFT PM 118AAM
SHAFT PM 118AAN
SHAFT PM 118AAO
SHAFT PM 118AAP
SHAFT PM 118AAQ
SHAFT PM 118AAR
SHAFT PM 118AAS
SHAFT PM 118AAT
SHAFT PM 118AAU
SHAFT PM 118AAV
SHAFT PM 118AAW
SHAFT PM 118AAX
SHAFT PM 118AAY
SHAFT PM 118AAZ
SHAFT PM 118ABA
SHAFT PM 118ABB
SHAFT PM 118ABC
SHAFT PM 118ABD
SHAFT PM 118ABE
SHAFT PM 118ABF
SHAFT PM 118ABG
SHAFT PM 118ABH
SHAFT PM 118ABI
SHAFT PM 118ABJ
SHAFT PM 118ABK
SHAFT PM 118ABL
SHAFT PM 118ABM
SHAFT PM 118ABN
SHAFT PM 118ABO
SHAFT PM 118ABP
SHAFT PM 118ABQ
SHAFT PM 118ABR
SHAFT PM 118ABS
SHAFT PM 118ABT
SHAFT PM 118ABU
SHAFT PM 118ABV
SHAFT PM 118ABW
SHAFT PM 118ABX
SHAFT PM 118ABY
SHAFT PM 118ABZ
SHAFT PM 118ACA
SHAFT PM 118ACB
SHAFT PM 118ACC
SHAFT PM 118ACD
SHAFT PM 118ACE
SHAFT PM 118ACF
SHAFT PM 118ACG
SHAFT PM 118ACH
SHAFT PM 118ACI
SHAFT PM 118ACJ
SHAFT PM 118ACK
SHAFT PM 118ACL
SHAFT PM 118ACM
SHAFT PM 118ACN
SHAFT PM 118ACO
SHAFT PM 118ACP
SHAFT PM 118ACQ
SHAFT PM 118ACR
SHAFT PM 118ACS
SHAFT PM 118ACT
SHAFT PM 118ACU
SHAFT PM 118ACV
SHAFT PM 118ACW
SHAFT PM 118ACX
SHAFT PM 118ACY
SHAFT PM 118ACZ
SHAFT PM 118ADA
SHAFT PM 118ADB
SHAFT PM 118ADC
SHAFT PM 118ADD
SHAFT PM 118ADE
SHAFT PM 118ADF
SHAFT PM 118ADG
SHAFT PM 118ADH
SHAFT PM 118ADI
SHAFT PM 118ADJ
SHAFT PM 118ADK
SHAFT PM 118ADL
SHAFT PM 118ADM
SHAFT PM 118ADN
SHAFT PM 118ADO
SHAFT PM 118ADP
SHAFT PM 118ADQ
SHAFT PM 118ADR
SHAFT PM 118ADS
SHAFT PM 118ADT
SHAFT PM 118ADU
SHAFT PM 118ADV
SHAFT PM 118ADW
SHAFT PM 118ADX
SHAFT PM 118ADY
SHAFT PM 118ADZ
SHAFT PM 118AEA
SHAFT PM 118AEB
SHAFT PM 118AEC
SHAFT PM 118AED
SHAFT PM 118AEE
SHAFT PM 118AEF
SHAFT PM 118AEG
SHAFT PM 118AEH
SHAFT PM 118AEI
SHAFT PM 118AEJ
SHAFT PM 118AEK
SHAFT PM 118AEL
SHAFT PM 118AEM
SHAFT PM 118AEN
SHAFT PM 118AEO
SHAFT PM 118AEP
SHAFT PM 118AEQ
SHAFT PM 118AER
SHAFT PM 118AES
SHAFT PM 118AET
SHAFT PM 118AEU
SHAFT PM 118AEV
SHAFT PM 118AEW
SHAFT PM 118AEX
SHAFT PM 118AEY
SHAFT PM 118AEZ
SHAFT PM 118AFA
SHAFT PM 118AFB
SHAFT PM 118AFC
SHAFT PM 118AFD
SHAFT PM 118AFE
SHAFT PM 118AFF
SHAFT PM 118AFG
SHAFT PM 118AFH
SHAFT PM 118AFI
SHAFT PM 118AFJ
SHAFT PM 118AFK
SHAFT PM 118AFL
SHAFT PM 118AFM
SHAFT PM 118AFN
SHAFT PM 118AFO
SHAFT PM 118AFP
SHAFT PM 118AFQ
SHAFT PM 118AFR
SHAFT PM 118AFS
SHAFT PM 118AFT
SHAFT PM 118AFU
SHAFT PM 118AFV
SHAFT PM 118AFW
SHAFT PM 118AFX
SHAFT PM 118AFY
SHAFT PM 118AFZ
SHAFT PM 118AGA
SHAFT PM 118AGB
SHAFT PM 118AGC
SHAFT PM 118AGD
SHAFT PM 118AGE
SHAFT PM 118AGF
SHAFT PM 118AGG
SHAFT PM 118AGH
SHAFT PM 118AGI
SHAFT PM 118AGJ
SHAFT PM 118AGK
SHAFT PM 118AGL
SHAFT PM 118AGM
SHAFT PM 118AGN
SHAFT PM 118AGO
SHAFT PM 118AGP
SHAFT PM 118AGQ
SHAFT PM 118AGR
SHAFT PM 118AGS
SHAFT PM 118AGT
SHAFT PM 118AGU
SHAFT PM 118AGV
SHAFT PM 118AGW
SHAFT PM 118AGX
SHAFT PM 118AGY
SHAFT PM 118AGZ
SHAFT PM 118AHA
SHAFT PM 118AHB
SHAFT PM 118AHC
SHAFT PM 118AHD
SHAFT PM 118AHE
SHAFT PM 118AHF
SHAFT PM 118AHG
SHAFT PM 118AHH
SHAFT PM 118AHI
SHAFT PM 118AHJ
SHAFT PM 118AHK
SHAFT PM 118AHL
SHAFT PM 118AHM
SHAFT PM 118AHN
SHAFT PM 118AHO
SHAFT PM 118AHP
SHAFT PM 118AHQ
SHAFT PM 118AHR
SHAFT PM 118AHS
SHAFT PM 118AHT
SHAFT PM 118AHU
SHAFT PM 118AHV
SHAFT PM 118AHW
SHAFT PM 118AHX
SHAFT PM 118AHY
SHAFT PM 118AHZ
SHAFT PM 118AIA
SHAFT PM 118AIB
SHAFT PM 118AIC
SHAFT PM 118AID
SHAFT PM 118AIE
SHAFT PM 118AIF
SHAFT PM 118AIG
SHAFT PM 118AIH
SHAFT PM 118AII
SHAFT PM 118AIJ
SHAFT PM 118AIK
SHAFT PM 118AIL
SHAFT PM 118AIM
SHAFT PM 118AIN
SHAFT PM 118AIO
SHAFT PM 118AIP
SHAFT PM 118AIQ
SHAFT PM 118AIR
SHAFT PM 118AIS
SHAFT PM 118AIT
SHAFT PM 118AIU
SHAFT PM 118AIV
SHAFT PM 118AIW
SHAFT PM 118AIX
SHAFT PM 118AIY
SHAFT PM 118AIZ
SHAFT PM 118AJA
SHAFT PM 118AJB
SHAFT PM 118AJC
SHAFT PM 118AJD
SHAFT PM 118AJE
SHAFT PM 118AJF
SHAFT PM 118AJG
SHAFT PM 118AJH
SHAFT PM 118AJI
SHAFT PM 118AJJ
SHAFT PM 118AJK
SHAFT PM 118AJL
SHAFT PM 118AJM
SHAFT PM 118AJN
SHAFT PM 118AJO
SHAFT PM 118AJP
SHAFT PM 118AJQ
SHAFT PM 118AJR
SHAFT PM 118AJS
SHAFT PM 118AJT
SHAFT PM 118AJU
SHAFT PM 118AJV
SHAFT PM 118AJW
SHAFT PM 118AJX
SHAFT PM 118AJY
SHAFT PM 118AJZ
SHAFT PM 118AKA
SHAFT PM 118AKB
SHAFT PM 118AKC
SHAFT PM 118AKD
SHAFT PM 118AKE
SHAFT PM 118AKF
SHAFT PM 118AKG
SHAFT PM 118AKH
SHAFT PM 118AKI
SHAFT PM 118AKJ
SHAFT PM 118AKK
SHAFT PM 118AKL
SHAFT PM 118AKM
SHAFT PM 118AKN
SHAFT PM 118AKO
SHAFT PM 118AKP
SHAFT PM 118AKQ
SHAFT PM 118AKR
SHAFT PM 118AKS
SHAFT PM 118AKT
SHAFT PM 118AKU
SHAFT PM 118AKV
SHAFT PM 118AKW
SHAFT PM 118AKX
SHAFT PM 118AKY
SHAFT PM 118AKZ
SHAFT PM 118ALA
SHAFT PM 118ALB
SHAFT PM 118ALC
SHAFT PM 118ALD
SHAFT PM 118ALE
SHAFT PM 118ALF
SHAFT PM 118ALG
SHAFT PM 118ALH
SHAFT PM 118ALI
SHAFT PM 118ALJ
SHAFT PM 118ALK
SHAFT PM 118ALL
SHAFT PM 118ALM
SHAFT PM 118ALN
SHAFT PM 118ALO
SHAFT PM 118ALP
SHAFT PM 118ALQ
SHAFT PM 118ALR
SHAFT PM 118ALS
SHAFT PM 118ALT
SHAFT PM 118ALU
SHAFT PM 118ALV
SHAFT PM 118ALW
SHAFT PM 118ALX
SHAFT PM 118ALY
SHAFT PM 118ALZ
SHAFT PM 118AMA
SHAFT PM 118AMB
SHAFT PM 118AMC
SHAFT PM 118AMD
SHAFT PM 118AME
SHAFT PM 118AMF
SHAFT PM 118AMG
SHAFT PM 118AMH
SHAFT PM 118AMI
SHAFT PM 118AMJ
SHAFT PM 118AMK
SHAFT PM 118AML
SHAFT PM 118AMM
SHAFT PM 118AMN
SHAFT PM 118AMO
SHAFT PM 118AMP
SHAFT PM 118AMQ
SHAFT PM 118AMR
SHAFT PM 118AMS
SHAFT PM 118AMT
SHAFT PM 118AMU
SHAFT PM 118AMV
SHAFT PM 118AMW
SHAFT PM 118AMX
SHAFT PM 118AMY
SHAFT PM 118AMZ
SHAFT PM 118ANA
SHAFT PM 118ANB
SHAFT PM 118ANC
SHAFT PM 118AND
SHAFT PM 118ANE
SHAFT PM 118ANF
SHAFT PM 118ANG
SHAFT PM 118ANH
SHAFT PM 118ANI
SHAFT PM 118ANJ
SHAFT PM 118ANK
SHAFT PM 118ANL
SHAFT PM 118ANM
SHAFT PM 118ANN
SHAFT PM 118ANO
SHAFT PM 118ANP
SHAFT PM 118ANQ
SHAFT PM 118ANR
SHAFT PM 118ANS
SHAFT PM 118ANT
SHAFT PM 118ANU
SHAFT PM 118ANV
SHAFT PM 118ANW
SHAFT PM 118ANX
SHAFT PM 118ANY
SHAFT PM 118ANZ
SHAFT PM 118AOA
SHAFT PM 118AOB
SHAFT PM 118AOC
SHAFT PM 118AOD
SHAFT PM 118AOE
SHAFT PM 118AOF
SHAFT PM 118AOG
SHAFT PM 118AOH
SHAFT PM 118AOI
SHAFT PM 118AOJ
SHAFT PM 118AOK
SHAFT PM 118AOL
SHAFT PM 118AOM
SHAFT PM 118AON
SHAFT PM 118AOO
SHAFT PM 118AOP
SHAFT PM 118AOQ
SHAFT PM 118AOR
SHAFT PM 118AOS
SHAFT PM 118AOT
SHAFT PM 118AOU
SHAFT PM 118AOV
SHAFT PM 118AOW
SHAFT PM 118AOX
SHAFT PM 118AOY
SHAFT PM 118AOZ
SHAFT PM 118APA
SHAFT PM 118APB
SHAFT PM 118APC
SHAFT PM 118APD
SHAFT PM 118APE
SHAFT PM 118APF
SHAFT PM 118APG
SHAFT PM 118APH
SHAFT PM 118API
SHAFT PM 118APJ
SH

FLAG NOTES:

1. MECHANICAL EQUIPMENT REF.
2. CONDENSATE TO INDIRECT DRAIN
3. ¾" CONDENSATE DOWN
4. DAYLIGHT RAIN LEADER ABOVE FLOW THRU PLANTER
5. TRANSITION PUMPED WASTE TO GRAVITY
6. CONDENSATE TO LANDSCAPE
7. PROVIDE FLOW SWITCHES AT SECONDARY OVERFLOW DRAIN
8. PROVIDE 4" WASTE (40 DFU) FOR FUTURE RETAIL
9. PROVIDE 3" VENT
10. PROVIDE CONDENSATE PUMP

◇ =WATER SUPPLY RISER IDENTIFICATION (RISER "B", FOR EXAMPLE). REFER TO DWG P4.00 FOR RISER DETAILS/ PIPE SIZES.

⟨1⟩ =WASTE/VENT RISER IDENTIFICATION (RISER "5", FOR EXAMPLE). REFER TO DWG P4.00 FOR RISER DETAILS/ PIPE SIZES.

STUDIO = UNIT TYPE (UNIT TYPE STUDIO A FOR EXAMPLE).

1/P4.00 = ENLARGED PLAN. FOR EXAMPLE, REFER TO DETAIL 1 ON SHEET P3.01

FOR WATER SUPPLY AND WASTE PIPING WITHIN UNITS, REFER TO ENLARGED UNIT PLANS ON SHEETS P3.01–P3.03

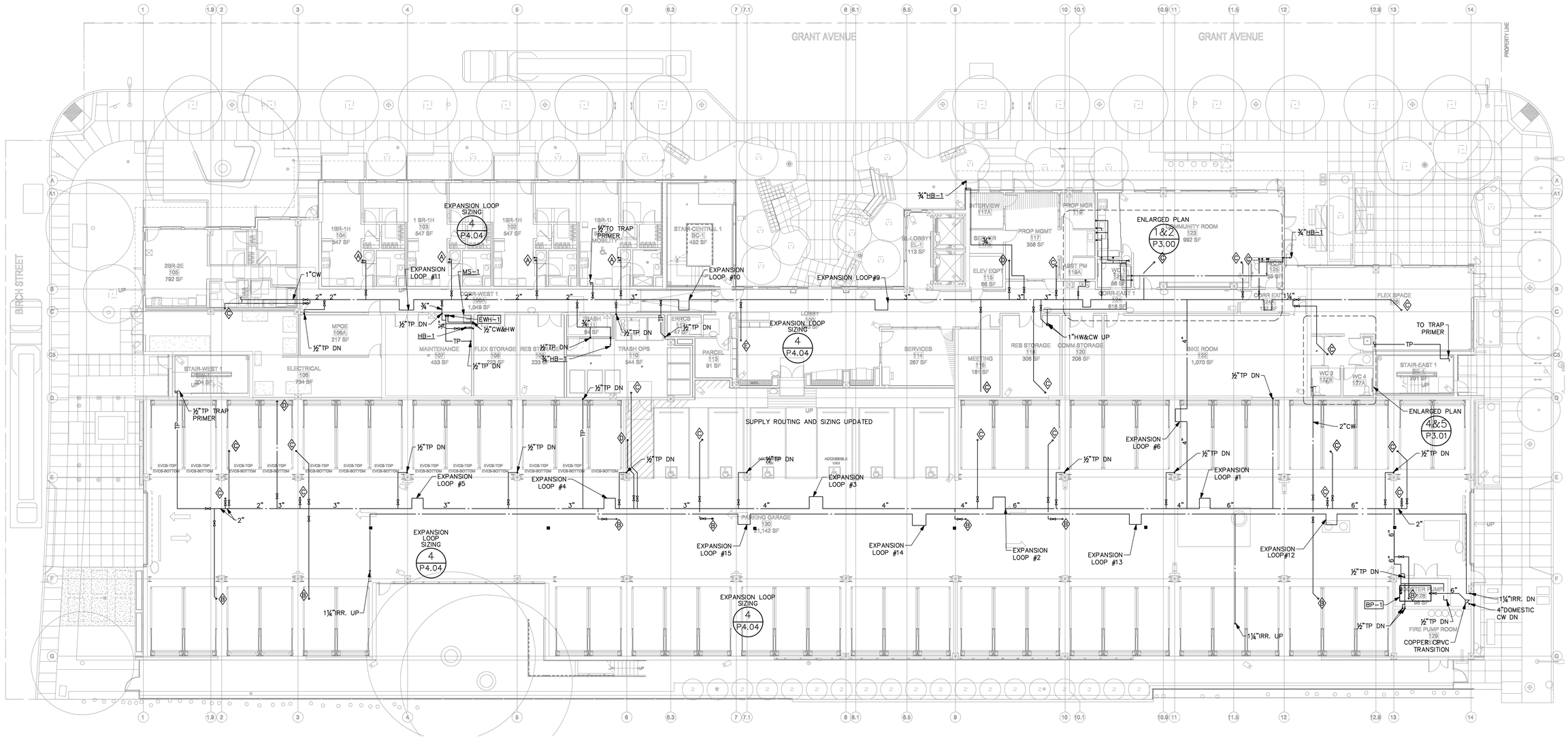

FIRST FLOOR PLAN – SUPPLY

SCALE: 3/32" = 1'–0"

COUNTY OF SANTA CLARA
BUILDING INSPECTION OFFICE
PLANS APPROVED FOR PERMIT
RECORD NO.: DEV22-1242
BY: Warren Krause Date: 7/28/2023
HARD COPY OF THESE STAMPED PLANS MUST BE ON THE SITE FOR INSPECTIONS

COPYRIGHT 2023, EMERALD CITY ENGINEERS, INC.
K:\STEPHENS a\2293-007 231 GRANT, PALO ALTO, CA\DWG\P2015 FIRST FLOOR SUPPLY.DWG 03-16-2023 13:46

VAN METER WILLIAMS POLLACK LLP
ARCHITECTURE | URBAN DESIGN ■ SAN FRANCISCO | DENVER | MINNEAPOLIS
333 Bryant Street, Suite 300, San Francisco, CA 94107 T 415.974.5282

☐ CIVIL ENGINEER
BKF - SAN JOSE
1730 N. FIRST ST. STE 600
SAN JOSE, CA 95112

☐ LANDSCAPE ARCHITECT
PLURAL STUDIO
2742 17TH STREET
SAN FRANCISCO, CA 94110

☐ STRUCTURAL ENGINEER
HOHBACH-LEWIN
250 SHERIDAN AVE STE 100
PALO ALTO, CA 94306

☐ MEP ENGINEER
EMERALD CITY ENGINEERS
21705 HIGHWAY 99
LYNWOOD, WA 98036

☐ SUSTAINABILITY/ENERGY
REDWOOD ENERGY
1887 Q STREET
ARCATA, CA 95521

EMERALD CITY ENGINEERS, INC
21705 Highway 99
Lynnwood, WA 98036
TEL: 425-741-1200

REGISTERED PROFESSIONAL ENGINEER
MASSAMAGHAN KONG HUI
EXP: 03-31-24
MECHANICAL
STATE OF CALIFORNIA

07/27/23

ID	DATE	NAME
1	11/11/22	PERMIT SET - CONV
A	12/16/22	BID SET
B	03/20/23	BID ADDENDUM SET
2	03/20/23	PLAN CHECK COMMENT RESPONSES SET
3	05/18/23	PLAN CHECK COMMENT RESPONSES SET
3	06/12/23	GRADING PERMIT
4	07/27/23	BUILDING RESUBMITTAL

Project:

EDUCATOR HOUSING
231 GRANT AVENUE

231 GRANT AVENUE
PALO ALTO, CA 94306

Client:
mercy HOUSING
abode communities
MERCY HOUSING/
ABODE COMMUNITIES

FIRST FLOOR
PLAN SUPPLY

JOB #: 2293-007

SCALE:

P2.01S

GRADING PERMIT | DATE: 06/12/2023

STORM DRAIN SIZING NOTE

SIZE STORM DRAIN PIPING PER 2019 CPC TABLE 1103.2, AT THE FOLLOWING SLOPES AND AND RAINFALL RATES:

SLOPE = ⅛" PER FOOT

PIPE SIZE	2" PER HOUR	4" PER HOUR
3"	1,644 SF	1,096 SF
4"	3,760 SF	2,507 SF
6"	10,700 SF	7,134 SF
8"	23,000 SF	15,334 SF
10"	41,400 SF	27,600 SF
12"	88,800 SF	44,400 SF
15"	158,667 SF	79,334 SF

VERTICAL RAIN WATER PIPING:

PIPE SIZE	4" PER HOUR
3"	1,096 SF
4"	2,507 SF
6"	7,134 SF
8"	15,334 SF

FLAG NOTES:

1. MECHANICAL EQUIPMENT REF.
2. CONDENSATE TO INDIRECT DRAIN
3. ¾" CONDENSATE DOWN
4. DAYLIGHT RAIN LEADER ABOVE FLOW THRU PLANTER
5. TRANSITION PUMPED WASTE TO GRAVITY
6. CONDENSATE TO LANDSCAPE
7. PROVIDE FLOW SWITCHES AT SECONDARY OVERFLOW DRAIN
8. PROVIDE 4" WASTE (40 DFU) FOR FUTURE RETAIL
9. PROVIDE 3" VENT
10. PROVIDE CONDENSATE PUMP

PLAN NOTES:

1. DOWNSPOUTS MAY BE ROUND, SQUARE, OR RECTANGULAR. SQUARE PIPE SHALL BE SIZED TO ENCLOSE ITS EQUIVALENT ROUND PIPE. RECTANGULAR PIPE SHALL HAVE AT LEAST THE SAME CROSS-SECTIONAL AREA AS ITS EQUIVALENT ROUND PIPE. REF. ARCH DRAWINGS FOR DETAILS.
2. ALL HORIZONTAL WASTE PIPING 4" AND LARGER SHALL SLOPE ⅛" PER L.F. MINIMUM.
3. PROVIDE CONDENSATE PIPING FROM MECHANICAL EQUIPMENT AND DISCHARGE AT INDIRECT DRAIN OR TAILPIECE OF LAVATORY/SINK. CONDENSATE SLOPES AT 1/8" PER FOOT PER CPC SECTION 814.1. REFER TO MECHANICAL PLANS FOR EQUIPMENT LOCATIONS. SIZE CONDENSATE PIPING PER CPC TABLE 814.3:

CONDENSATE PIPE SIZING (2019 CPC – TABLE 814.3)	
EQUIP CAPACITY IN TONS OF REFRIGERATION	MIN CONDENSATE PIPE DIAMETER IN INCHES
UP TO 20	3/4
21–40	1
41–90	1–1/4
91–125	1–1/2
126–250	2

◈ =WATER SUPPLY RISER IDENTIFICATION (RISER "B", FOR EXAMPLE). REFER TO DWG P4.00 FOR RISER DETAILS/ PIPE SIZES.

(1) =WASTE/VENT RISER IDENTIFICATION (RISER "5", FOR EXAMPLE). REFER TO DWG P4.00 FOR RISER DETAILS/ PIPE SIZES.

STUDIO = UNIT TYPE (UNIT TYPE STUDIO A FOR EXAMPLE).

1 / P4.00 = ENLARGED PLAN. FOR EXAMPLE, REFER TO DETAIL 1 ON SHEET P3.01

FOR WATER SUPPLY AND WASTE PIPING WITHIN UNITS, REFER TO ENLARGED UNIT PLANS ON SHEETS P3.01–P3.03

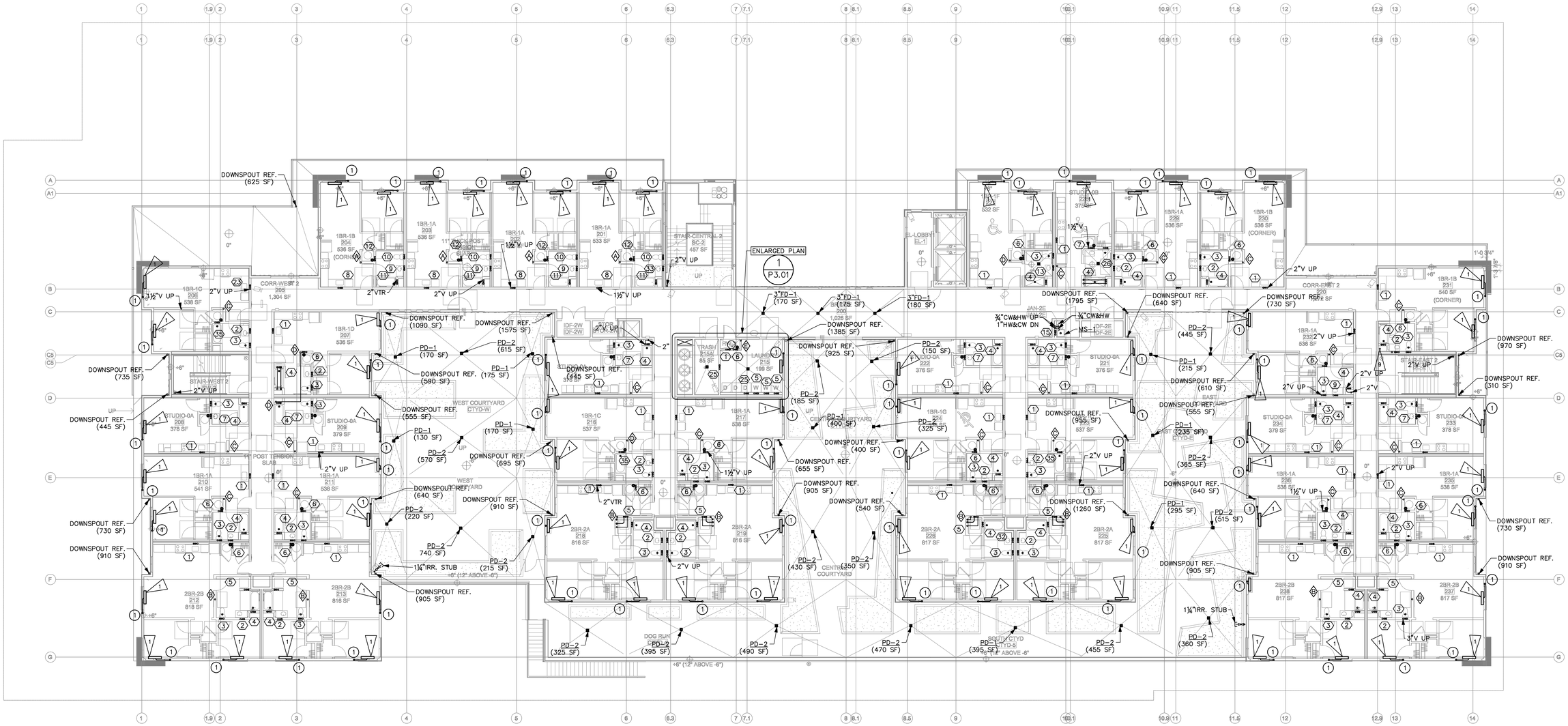

SECOND FLOOR PLAN

SCALE: 3/32" = 1'-0"

COUNTY OF SANTA CLARA
BUILDING INSPECTION OFFICE
PLANS APPROVED FOR PERMIT
RECORD NO.: DEV22-1242
BY: Warren Krause Date: 7/28/2023
HARD COPY OF THESE STAMPED PLANS MUST BE ON THE SITE FOR INSPECTIONS

COPYRIGHT 2023, EMERALD CITY ENGINEERS, INC.
K:\STEPHENS A\2293-007 231 GRANT, PALO ALTO, CA\DWG\P202 SECOND FLOOR.DWG 03-16-2023 10:06

VAN METER WILLIAMS POLLACK LLP
ARCHITECTURE | URBAN DESIGN ■ SAN FRANCISCO | DENVER | MINNEAPOLIS
333 Bryant Street, Suite 300, San Francisco, CA 94107 T 415.974.5282

☐ CIVIL ENGINEER
BKF - SAN JOSE
1730 N. FIRST ST. STE 600
SAN JOSE, CA 95112

☐ LANDSCAPE ARCHITECT
PLURAL STUDIO
2742 17TH STREET
SAN FRANCISCO, CA 94110

☐ STRUCTURAL ENGINEER
HOHBACH-LEWIN
250 SHERIDAN AVE STE 100
PALO ALTO, CA 94306

☐ MEP ENGINEER
EMERALD CITY ENGINEERS
21705 HIGHWAY 99
LYNWOOD, WA 98036

☐ SUSTAINABILITY/ENERGY
REDWOOD ENERGY
1887 Q STREET
ARCATA, CA 95521

EMERALD CITY ENGINEERS, INC
21705 Highway 99
Lynnwood, WA 98036
TEL: 425-741-1200

REGISTERED PROFESSIONAL ENGINEER THOMAS MAGHAN KNIGHT No. 24966 EXP: 03-31-24 MECHANICAL STATE OF CALIFORNIA

07/27/23

ID	DATE	NAME
1	11/11/22	PERMIT SET - CONV
A	12/16/22	BID SET
B	03/20/23	BID ADDENDUM SET
2	03/20/23	PLAN CHECK COMMENT RESPONSES SET
3	05/18/23	PLAN CHECK COMMENT RESPONSES SET
3	06/12/23	GRADING PERMIT
4	07/27/23	BUILDING RESUBMITTAL

Project:

EDUCATOR HOUSING 231 GRANT AVENUE

231 GRANT AVENUE
PALO ALTO, CA 94306

Client:

MERCY HOUSING/
ABODE COMMUNITIES

SECOND FLOOR PLAN

JOB #: 2293-007

SCALE:

P2.02

GRADING PERMIT | DATE: 06/12/2023

FLAG NOTES:

1. MECHANICAL EQUIPMENT REF.
2. CONDENSATE TO INDIRECT DRAIN
3. ¾" CONDENSATE DOWN
4. DAYLIGHT RAIN LEADER ABOVE FLOW THRU PLANTER
5. TRANSITION PUMPED WASTE TO GRAVITY
6. CONDENSATE TO LANDSCAPE
7. PROVIDE FLOW SWITCHES AT SECONDARY OVERFLOW DRAIN
8. PROVIDE 4" WASTE (40 DFU) FOR FUTURE RETAIL
9. PROVIDE 3" VENT
10. PROVIDE CONDENSATE PUMP

PLAN NOTES:

1. DOWNSPOUTS MAY BE ROUND, SQUARE, OR RECTANGULAR. SQUARE PIPE SHALL BE SIZED TO ENCLOSE ITS EQUIVALENT ROUND PIPE. RECTANGULAR PIPE SHALL HAVE AT LEAST THE SAME CROSS-SECTIONAL AREA AS ITS EQUIVALENT ROUND PIPE. REF. ARCH DRAWINGS FOR DETAILS.
2. ALL HORIZONTAL WASTE PIPING 4" AND LARGER SHALL SLOPE ⅛" PER L.F. MINIMUM.
3. PROVIDE CONDENSATE PIPING FROM MECHANICAL EQUIPMENT AND DISCHARGE AT INDIRECT DRAIN OR TAILPIECE OF LAVATORY/SINK. CONDENSATE SLOPES AT 1/8" PER FOOT PER CPC SECTION 814.1. REFER TO MECHANICAL PLANS FOR EQUIPMENT LOCATIONS. SIZE CONDENSATE PIPING PER CPC TABLE 814.3:

CONDENSATE PIPE SIZING (2019 CPC – TABLE 814.3)	
EQUIP CAPACITY IN TONS OF REFRIGERATION	MIN CONDENSATE PIPE DIAMETER IN INCHES
UP TO 20	3/4
21–40	1
41–90	1–1/4
91–125	1–1/2
126–250	2

◈ =WATER SUPPLY RISER IDENTIFICATION (RISER "B", FOR EXAMPLE). REFER TO DWG P4.00 FOR RISER DETAILS/ PIPE SIZES.

(1) =WASTE/VENT RISER IDENTIFICATION (RISER "5", FOR EXAMPLE). REFER TO DWG P4.00 FOR RISER DETAILS/ PIPE SIZES.

STUDIO = UNIT TYPE (UNIT TYPE STUDIO A FOR EXAMPLE).

1 / P4.00 = ENLARGED PLAN. FOR EXAMPLE, REFER TO DETAIL 1 ON SHEET P3.01

FOR WATER SUPPLY AND WASTE PIPING WITHIN UNITS, REFER TO ENLARGED UNIT PLANS ON SHEETS P3.01–P3.03

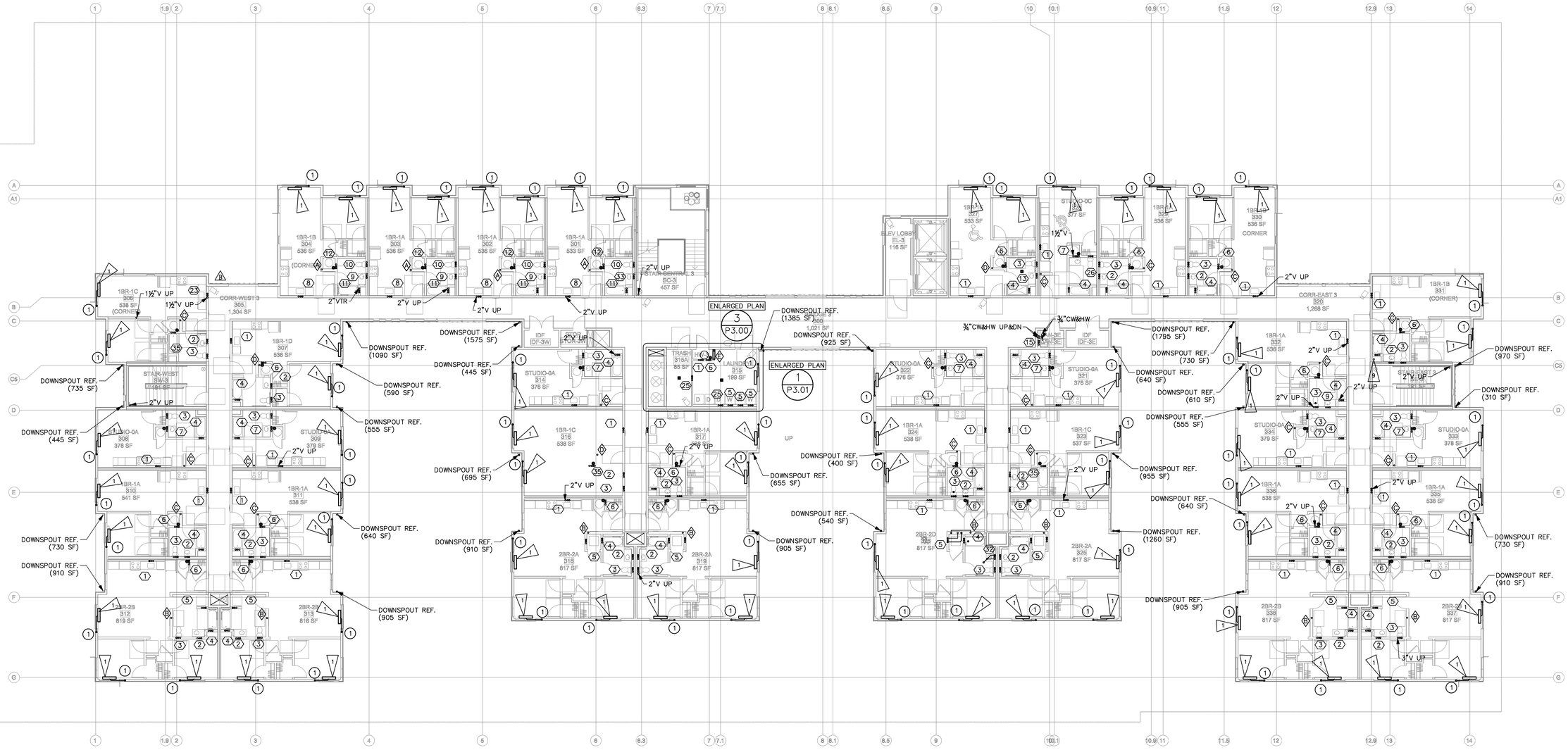

THIRD FLOOR PLAN

SCALE: 3/32" = 1'-0"

COUNTY OF SANTA CLARA
BUILDING INSPECTION OFFICE
PLANS APPROVED FOR PERMIT
RECORD NO.: DEV22-1242
BY: Warren Krause Date: 7/28/2023
HARD COPY OF THESE STAMPED PLANS MUST BE ON THE SITE FOR INSPECTIONS

COPYRIGHT 2023, EMERALD CITY ENGINEERS, INC.
K:\STEPHENS a\2293-007 231 GRANT, PALO ALTO, CA\DWG\P203 THIRD FLOOR.DWG 03-16-2023 10:05

VAN METER WILLIAMS POLLACK LLP
ARCHITECTURE | URBAN DESIGN ■ SAN FRANCISCO | DENVER | MINNEAPOLIS
333 Bryant Street, Suite 300, San Francisco, CA 94107 T 415.974.5282

☐ CIVIL ENGINEER
BKF - SAN JOSE
1730 N. FIRST ST. STE 600
SAN JOSE, CA 95112

☐ LANDSCAPE ARCHITECT
PLURAL STUDIO
2742 17TH STREET
SAN FRANCISCO, CA 94110

☐ STRUCTURAL ENGINEER
HOHBACH-LEWIN
250 SHERIDAN AVE STE 100
PALO ALTO, CA 94306

☐ MEP ENGINEER
EMERALD CITY ENGINEERS
21705 HIGHWAY 99
LYNWOOD, WA 98036

☐ SUSTAINABILITY/ENERGY
REDWOOD ENERGY
1887 Q STREET
ARCATA, CA 95521

EMERALD CITY ENGINEERS, INC
21705 Highway 99
Lynnwood, WA 98036
TEL: 425-741-1200

REGISTERED PROFESSIONAL ENGINEER
THOMAS MAGHAN KINNEY
EXP: 03-31-24
MECHANICAL
STATE OF CALIFORNIA
07/27/23

ID	DATE	NAME
1	11/11/22	PERMIT SET - CONV
A	12/16/22	BID SET
B	03/20/23	BID ADDENDUM SET
2	03/20/23	PLAN CHECK COMMENT RESPONSES SET
3	05/18/23	PLAN CHECK COMMENT RESPONSES SET
3	06/12/23	GRADING PERMIT
4	07/27/23	BUILDING RESUBMITTAL

Project:

EDUCATOR HOUSING
231 GRANT AVENUE

231 GRANT AVENUE
PALO ALTO, CA 94306

Client:
MERCY HOUSING/
ABODE COMMUNITIES

THIRD FLOOR PLAN

JOB #: 2293-007

SCALE:

P2.03

GRADING PERMIT | DATE: 06/12/2023

FLAG NOTES:

1. MECHANICAL EQUIPMENT REF.
2. CONDENSATE TO INDIRECT DRAIN
3. ¾" CONDENSATE DOWN
4. DAYLIGHT RAIN LEADER ABOVE FLOW THRU PLANTER
5. TRANSITION PUMPED WASTE TO GRAVITY
6. CONDENSATE TO LANDSCAPE
7. PROVIDE FLOW SWITCHES AT SECONDARY OVERFLOW DRAIN
8. PROVIDE 4" WASTE (40 DFU) FOR FUTURE RETAIL
9. PROVIDE 3" VENT
10. PROVIDE CONDENSATE PUMP

PLAN NOTES:

1. DOWNSPOUTS MAY BE ROUND, SQUARE, OR RECTANGULAR. SQUARE PIPE SHALL BE SIZED TO ENCLOSE ITS EQUIVALENT ROUND PIPE. RECTANGULAR PIPE SHALL HAVE AT LEAST THE SAME CROSS-SECTIONAL AREA AS ITS EQUIVALENT ROUND PIPE. REF. ARCH DRAWINGS FOR DETAILS.
2. ALL HORIZONTAL WASTE PIPING 4" AND LARGER SHALL SLOPE ⅛" PER L.F. MINIMUM.
3. PROVIDE CONDENSATE PIPING FROM MECHANICAL EQUIPMENT AND DISCHARGE AT INDIRECT DRAIN OR TAILPIECE OF LAVATORY/SINK. CONDENSATE SLOPES AT 1/8" PER FOOT PER CPC SECTION 814.1. REFER TO MECHANICAL PLANS FOR EQUIPMENT LOCATIONS. SIZE CONDENSATE PIPING PER CPC TABLE 814.3:

CONDENSATE PIPE SIZING (2019 CPC – TABLE 814.3)	
EQUIP. CAPACITY IN TONS OF REFRIGERATION	MIN CONDENSATE PIPE DIAMETER IN INCHES
UP TO 20	3/4
21–40	1
41–90	1–1/4
91–125	1–1/2
126–250	2

◇ =WATER SUPPLY RISER IDENTIFICATION (RISER "B", FOR EXAMPLE). REFER TO DWG P4.00 FOR RISER DETAILS/ PIPE SIZES.

(1) =WASTE/VENT RISER IDENTIFICATION (RISER "5", FOR EXAMPLE). REFER TO DWG P4.00 FOR RISER DETAILS/ PIPE SIZES.

STUDIO = UNIT TYPE (UNIT TYPE STUDIO A FOR EXAMPLE).

1 / P4.00 = ENLARGED PLAN. FOR EXAMPLE, REFER TO DETAIL 1 ON SHEET P3.01

FOR WATER SUPPLY AND WASTE PIPING WITHIN UNITS, REFER TO ENLARGED UNIT PLANS ON SHEETS P3.01–P3.03

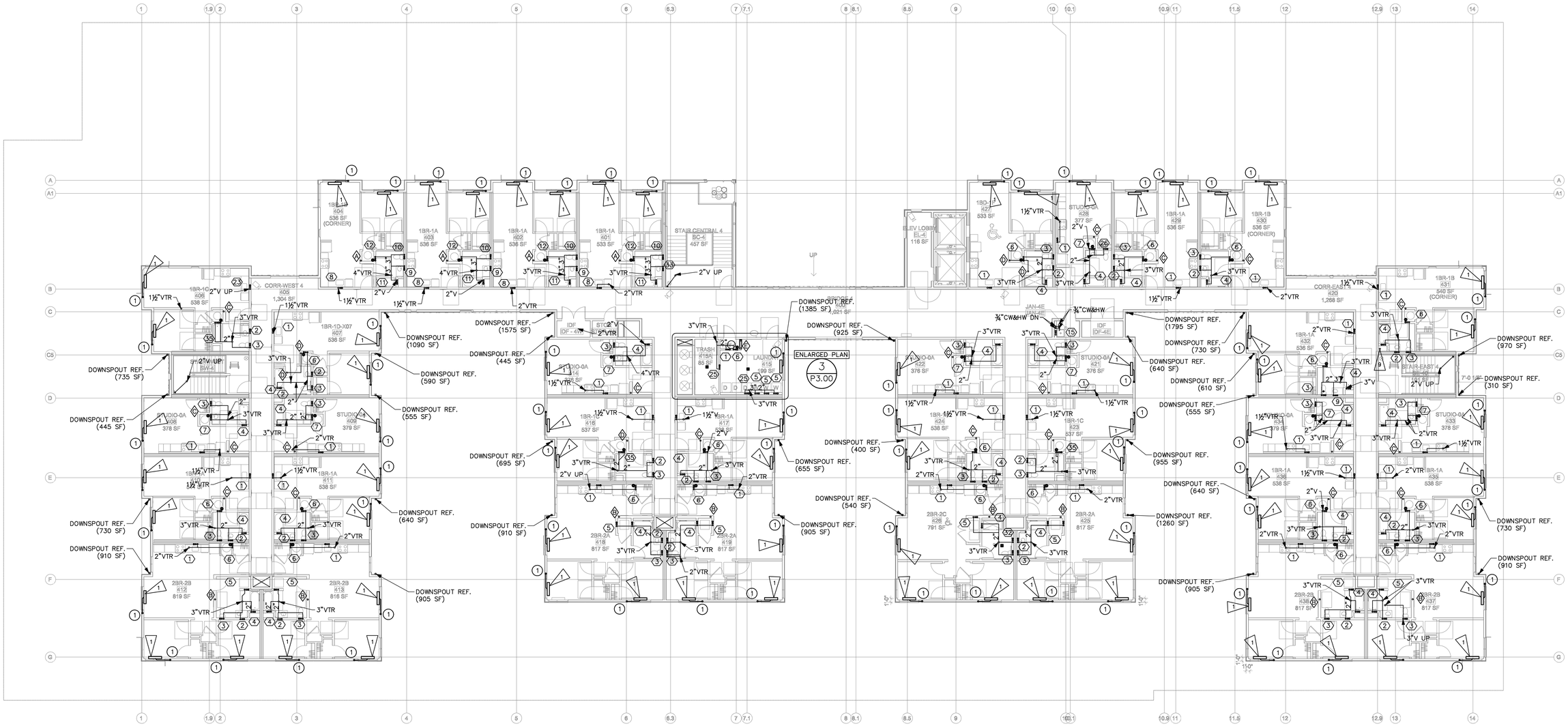

FOURTH FLOOR PLAN

SCALE: 3/32" = 1'-0"

COUNTY OF SANTA CLARA
BUILDING INSPECTION OFFICE
PLANS APPROVED FOR PERMIT
RECORD NO.: DEV22-1242
BY: Warren Krause Date: 7/28/2023
HARD COPY OF THESE STAMPED PLANS MUST BE ON THE SITE FOR INSPECTIONS

COPYRIGHT 2023, EMERALD CITY ENGINEERS, INC.
K:\STEPHENS J\2293-007 231 GRANT, PALO ALTO, CA\DWG\P204 FOURTH FLOOR.DWG 03-16-2023 10:05

VAN METER WILLIAMS POLLACK LLP
ARCHITECTURE | URBAN DESIGN ■ SAN FRANCISCO | DENVER | MINNEAPOLIS
333 Bryant Street, Suite 300, San Francisco, CA 94107 T 415.974.5282

☐ CIVIL ENGINEER
BKF - SAN JOSE
1730 N. FIRST ST. STE 600
SAN JOSE, CA 95112

☐ LANDSCAPE ARCHITECT
PLURAL STUDIO
2742 17TH STREET
SAN FRANCISCO, CA 94110

☐ STRUCTURAL ENGINEER
HOHBACH-LEWIN
250 SHERIDAN AVE STE 100
PALO ALTO, CA 94306

☐ MEP ENGINEER
EMERALD CITY ENGINEERS
21705 HIGHWAY 99
LYNWOOD, WA 98036

☐ SUSTAINABILITY/ENERGY
REDWOOD ENERGY
1887 Q STREET
ARCATA, CA 95521

EMERALD CITY ENGINEERS, INC
21705 Highway 99
Lynnwood, WA 98036
TEL: 425-741-1200

REGISTERED PROFESSIONAL ENGINEER JAMES MAGHAN KOHLER No. 24686 EXP: 03-31-24 MECHANICAL STATE OF CALIFORNIA

07/27/23

ID	DATE	NAME
1	11/11/22	PERMIT SET - CONV
A	12/16/22	BID SET
B	03/20/23	BID ADDENDUM SET
2	03/20/23	PLAN CHECK COMMENT RESPONSES SET
3	05/18/23	PLAN CHECK COMMENT RESPONSES SET
3	06/12/23	GRADING PERMIT
4	07/27/23	BUILDING RESUBMITTAL

Project:

EDUCATOR HOUSING
231 GRANT AVENUE

231 GRANT AVENUE
PALO ALTO, CA 94306

Client:

MERCY HOUSING/
ABODE COMMUNITIES

FOURTH FLOOR PLAN

JOB #: 2293-007

SCALE:

P2.04

GRADING PERMIT | DATE: 06/12/2023

STORM DRAIN SIZING NOTE

SIZE STORM DRAIN PIPING PER 2019 CPC TABLE 1103.2, AT THE FOLLOWING SLOPES AND AND RAINFALL RATES:

SLOPE = ⅛" PER FOOT

PIPE SIZE	2" PER HOUR	4" PER HOUR
3"	1,644 SF	1,096 SF
4"	3,760 SF	2,507 SF
6"	10,700 SF	7,134 SF
8"	23,000 SF	15,334 SF
10"	41,400 SF	27,600 SF
12"	88,800 SF	44,400 SF
15"	158,667 SF	79,334 SF

VERTICAL RAIN WATER PIPING:

PIPE SIZE	4" PER HOUR
3"	1,096 SF
4"	2,507 SF
6"	7,134 SF
8"	15,334 SF

FLAG NOTES:

1. MECHANICAL EQUIPMENT REF.
2. CONDENSATE TO INDIRECT DRAIN
3. ¾" CONDENSATE DOWN
4. DAYLIGHT RAIN LEADER ABOVE FLOW THRU PLANTER
5. TRANSITION PUMPED WASTE TO GRAVITY
6. CONDENSATE TO LANDSCAPE
7. PROVIDE FLOW SWITCHES AT SECONDARY OVERFLOW DRAIN
8. PROVIDE 4" WASTE (40 DFU) FOR FUTURE RETAIL
9. PROVIDE 3" VENT
10. PROVIDE CONDENSATE PUMP

PLAN NOTES:

1. DOWNSPOUTS MAY BE ROUND, SQUARE, OR RECTANGULAR. SQUARE PIPE SHALL BE SIZED TO ENCLOSE ITS EQUIVALENT ROUND PIPE. RECTANGULAR PIPE SHALL HAVE AT LEAST THE SAME CROSS-SECTIONAL AREA AS ITS EQUIVALENT ROUND PIPE. REF. ARCH DRAWINGS FOR DETAILS.
2. ALL HORIZONTAL WASTE PIPING 4" AND LARGER SHALL SLOPE ⅛" PER L.F. MINIMUM.
3. PROVIDE CONDENSATE PIPING FROM MECHANICAL EQUIPMENT AND DISCHARGE AT INDIRECT DRAIN OR TAILPIECE OF LAVATORY/SINK. CONDENSATE SLOPES AT 1/8" PER FOOT PER CPC SECTION 814.1. REFER TO MECHANICAL PLANS FOR EQUIPMENT LOCATIONS. SIZE CONDENSATE PIPING PER CPC TABLE 814.3:

CONDENSATE PIPE SIZING (2019 CPC – TABLE 814.3)	
EQUIP CAPACITY IN TONS OF REFRIGERATION	MIN CONDENSATE PIPE DIAMETER IN INCHES
UP TO 20	3/4
21–40	1
41–90	1–1/4
91–125	1–1/2
126–250	2

◈ =WATER SUPPLY RISER IDENTIFICATION (RISER "B", FOR EXAMPLE). REFER TO DWG P4.00 FOR RISER DETAILS/ PIPE SIZES.

⟨1⟩ =WASTE/VENT RISER IDENTIFICATION (RISER "5", FOR EXAMPLE). REFER TO DWG P4.00 FOR RISER DETAILS/ PIPE SIZES.

STUDIO = UNIT TYPE (UNIT TYPE STUDIO A FOR EXAMPLE).

1 / P4.00 = ENLARGED PLAN. FOR EXAMPLE, REFER TO DETAIL 1 ON SHEET P3.01

FOR WATER SUPPLY AND WASTE PIPING WITHIN UNITS, REFER TO ENLARGED UNIT PLANS ON SHEETS P3.01–P3.03

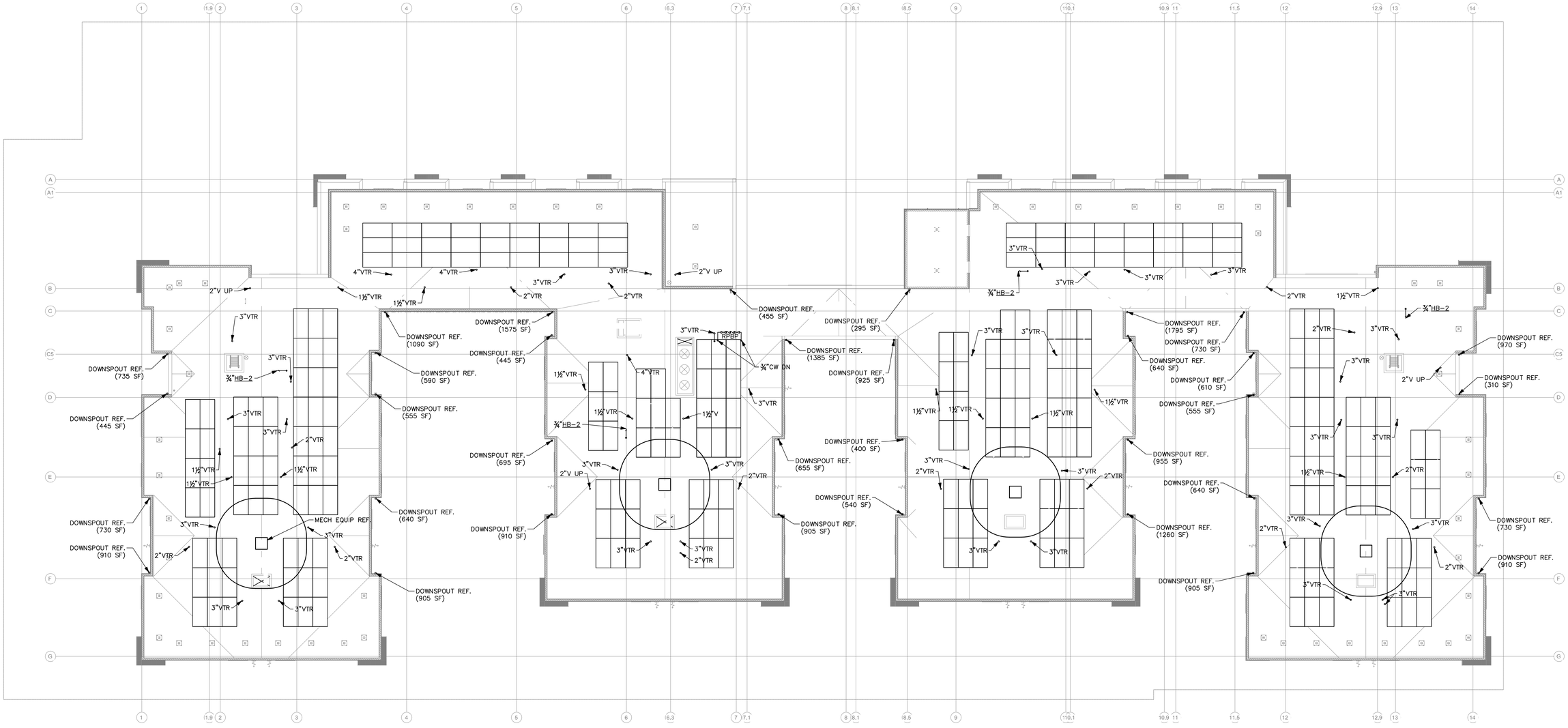

ROOF PLAN

SCALE: 3/32" = 1'-0"

COUNTY OF SANTA CLARA
BUILDING INSPECTION OFFICE
PLANS APPROVED FOR PERMIT
RECORD NO.: DEV22-1242
BY: Warren Krause Date: 7/28/2023
HARD COPY OF THESE STAMPED PLANS MUST BE ON THE SITE FOR INSPECTIONS

COPYRIGHT 2023, EMERALD CITY ENGINEERS, INC.
N:\STEPHENS A\2293-007 231 GRANT, PALO ALTO, CA\DWG\P205 ROOF FLOORLOWG 06-13-2023 11:10

VAN METER WILLIAMS POLLACK LLP
ARCHITECTURE | URBAN DESIGN ■ SAN FRANCISCO | DENVER | MINNEAPOLIS
333 Bryant Street, Suite 300, San Francisco, CA 94107 T 415.974.5282

☐ CIVIL ENGINEER
BKF - SAN JOSE
1730 N. FIRST ST. STE 600
SAN JOSE, CA 95112

☐ LANDSCAPE ARCHITECT
PLURAL STUDIO
2742 17TH STREET
SAN FRANCISCO, CA 94110

☐ STRUCTURAL ENGINEER
HOHBACH-LEWIN
250 SHERIDAN AVE STE 100
PALO ALTO, CA 94306

☐ MEP ENGINEER
EMERALD CITY ENGINEERS
21705 HIGHWAY 99
LYNWOOD, WA 98036

☐ SUSTAINABILITY/ENERGY
REDWOOD ENERGY
1887 Q STREET
ARCATA, CA 95521

EMERALD CITY ENGINEERS, INC
21705 Highway 99
Lynnwood, WA 98036
TEL: 425-741-1200

REGISTERED PROFESSIONAL ENGINEER
DOUGLAS MAGHAN KNUTSEN
No. 25855
EXP: 03-31-24
MECHANICAL
STATE OF CALIFORNIA

07/27/23

ID	DATE	NAME
1	11/11/22	PERMIT SET - CONV
A	12/16/22	BID SET
B	03/20/23	BID ADDENDUM SET
2	03/20/23	PLAN CHECK COMMENT RESPONSES SET
3	05/18/23	PLAN CHECK COMMENT RESPONSES SET
3	06/12/23	GRADING PERMIT
4	07/27/23	BUILDING RESUBMITTAL

Project:

EDUCATOR HOUSING
231 GRANT AVENUE

231 GRANT AVENUE
PALO ALTO, CA 94306

Client:

MERCY HOUSING/
ABODE COMMUNITIES

ROOF PLAN

JOB #: 2293-007

SCALE:

P2.05

GRADING PERMIT | DATE: 06/12/2023

WATER PIPE SIZING TABLE		
FIXTURE	HOT WATER	COLD WATER
LAV–2 (0.75 FU)	1/2"	1/2"
LAV–3 (0.75 FU)	1/2"	1/2"
WC–2 (2.50 FU)	–	1/2"
SK–2 (1.25 FU)	1/2"	1/2"
SK–3 (1.25 FU)	1/2"	1/2"
DF–1 (1 FU)	1/2"	1/2"
CLOTHES WASHER (2.25 FU)	1/2"	1/2"
MS–1 (2.25 FU)	1/2"	1/2"

FLAG NOTES:

1. HVAC EQUIPMENT (REF).
2. CONDENSATE TO INDIRECT DRAIN
7. PROVIDE FLOW SWITCHES AT SECONDARY OVERFLOW DRAIN

NOTES:

1. REFER TO DETAIL 4 ON SHEET P4.03 FOR WATER HEATER T&P RELIEF ROUTING TO AN INDIRECT DRAIN.

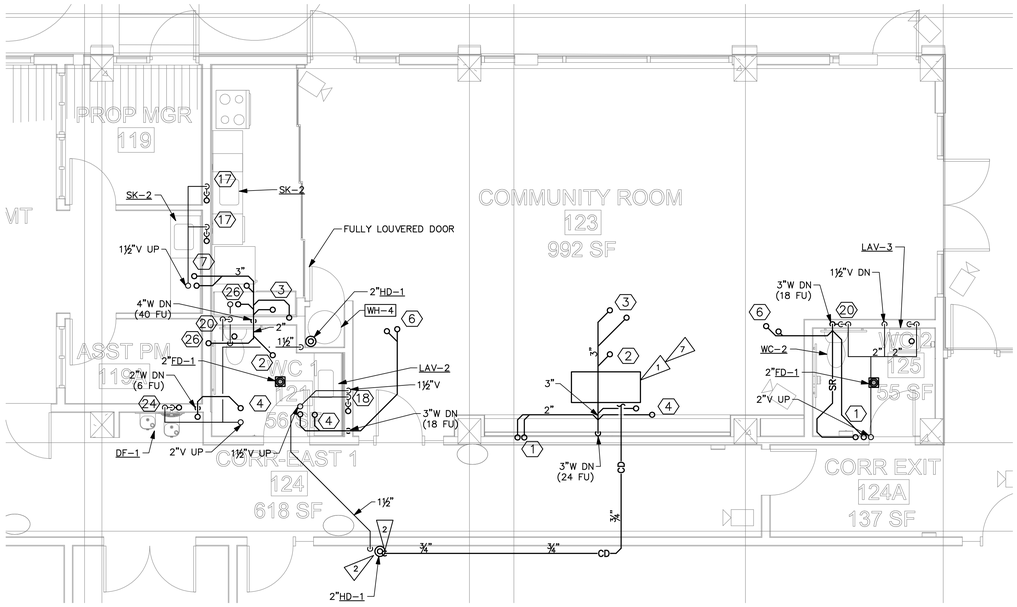

COMMUNITY ROOM – WASTE & VENT

ENLARGED PLAN

SCALE: 1/4" = 1'–0"

1 P3.00

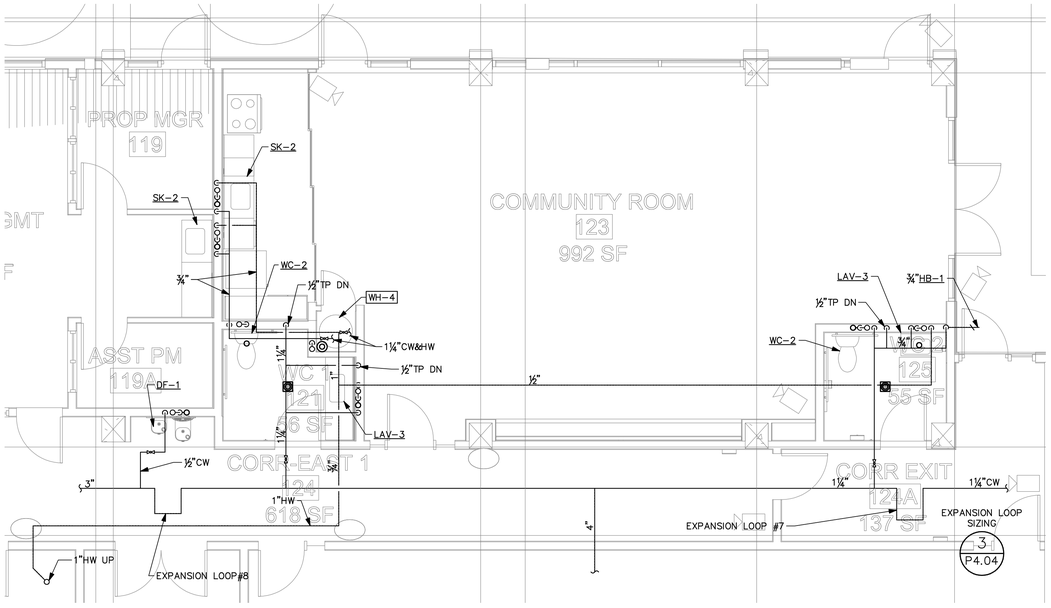

COMMUNITY ROOM – SUPPLY

ENLARGED PLAN

SCALE: 1/4" = 1'–0"

2 P3.00

COPYRIGHT 2023, EMERALD CITY ENGINEERS, INC.
K:\STEPHENS A\2293-007 231 GRANT, PALO ALTO, CA\DWG\P300 ENLARGED PLANS.DWG 03-16-2023 10:04

VAN METER WILLIAMS POLLACK LLP
ARCHITECTURE | URBAN DESIGN ■ SAN FRANCISCO | DENVER | MINNEAPOLIS
333 Bryant Street, Suite 300, San Francisco, CA 94107 T 415.974.5252

☐ CIVIL ENGINEER

BKF - SAN JOSE
1730 N. FIRST ST. STE 600
SAN JOSE, CA 95112

☐ LANDSCAPE ARCHITECT

PLURAL STUDIO
2742 17TH STREET
SAN FRANCISCO, CA 94110

☐ STRUCTURAL ENGINEER

HOHBACH-LEWIN
250 SHERIDAN AVE STE 100
PALO ALTO, CA 94306

☐ MEP ENGINEER

EMERALD CITY ENGINEERS
21705 HIGHWAY 99
LYNWOOD, WA 98036

☐ SUSTAINABILITY/ENERGY

REDWOOD ENERGY
1887 Q STREET
ARCATA, CA 95521

EMERALD CITY ENGINEERS, INC
21705 Highway 99
Lynnwood, WA 98036
TEL: 425-741-1200

REGISTERED PROFESSIONAL ENGINEER
MASSAMAGHAN KONG
No. 28965
EXP. 03-31-24
MECHANICAL
STATE OF CALIFORNIA

07/27/23

ID	DATE	NAME
1	11/11/22	PERMIT SET - CONV
A	12/16/22	BID SET
B	03/20/23	BID ADDENDUM SET
2	03/20/23	PLAN CHECK COMMENT RESPONSES SET
3	05/18/23	PLAN CHECK COMMENT RESPONSES SET
3	06/12/23	GRADING PERMIT
4	07/27/23	BUILDING RESUBMITTAL

Project:

EDUCATOR HOUSING
231 GRANT AVENUE

231 GRANT AVENUE
PALO ALTO, CA 94306

Client:

MERCY HOUSING/
ABODE COMMUNITIES

ENLARGED PLANS

COUNTY OF SANTA CLARA
BUILDING INSPECTION OFFICE
PLANS APPROVED FOR PERMIT
RECORD NO.: DEV22-1242
BY: Warren Krause Date: 7/28/2023
HARD COPY OF THESE STAMPED PLANS MUST BE ON THE SITE FOR INSPECTIONS

JOB #: 2293-007
SCALE:

P3.00

GRADING PERMIT | DATE: 06/12/2023

FLAG NOTES:

1. HVAC EQUIPMENT (REF).
2. CONDENSATE TO INDIRECT DRAIN
7. PROVIDE FLOW SWITCHES AT SECONDARY OVERFLOW DRAIN

NOTES:

1. REFER TO DETAIL 4 ON SHEET P4.03 FOR WATER HEATER T&P RELIEF ROUTING TO AN INDIRECT DRAIN.

WATER PIPE SIZING TABLE		
FIXTURE	HOT WATER	COLD WATER
LAV-2 (0.75 FU)	1/2"	1/2"
LAV-3 (0.75 FU)	1/2"	1/2"
WC-2 (2.50 FU)	–	1/2"
SK-2 (1.25 FU)	1/2"	1/2"
SK-3 (1.25 FU)	1/2"	1/2"
DF-1 (1 FU)	1/2"	1/2"
CLOTHES WASHER (2.25 FU)	1/2"	1/2"
MS-1 (2.25 FU)	1/2"	1/2"

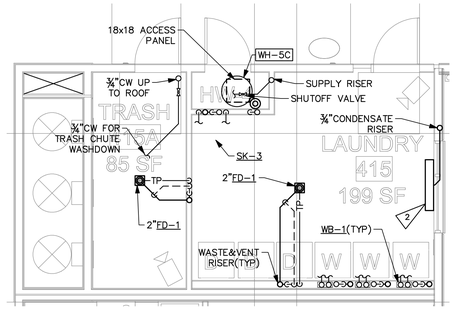

LAUNDRY WASTE & VENT

ENLARGED PLAN

SCALE: 1/4" = 1'-0"

3 P3.01

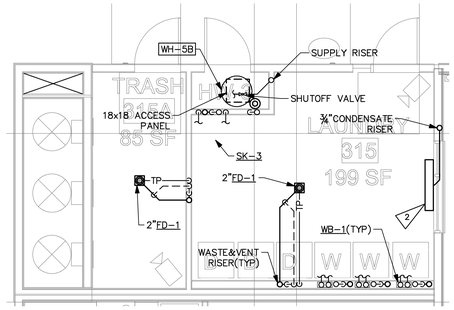

LAUNDRY WASTE & VENT

ENLARGED PLAN

SCALE: 1/4" = 1'-0"

2 P3.01

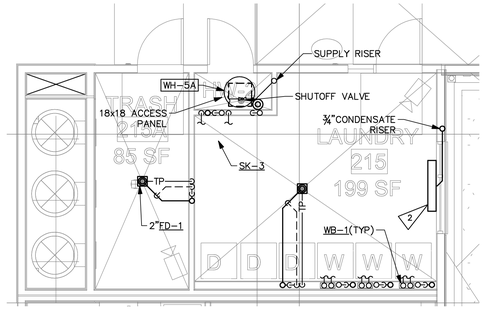

LAUNDRY WASTE & VENT

ENLARGED PLAN

SCALE: 1/4" = 1'-0"

1 P3.01

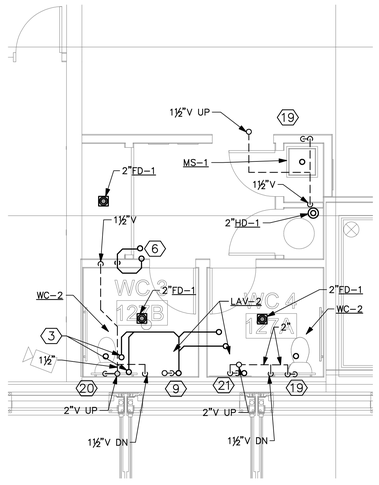

FLEX SPACE PUBLIC BATHROOM

ENLARGED PLAN

SCALE: 1/4" = 1'-0"

5 P3.01

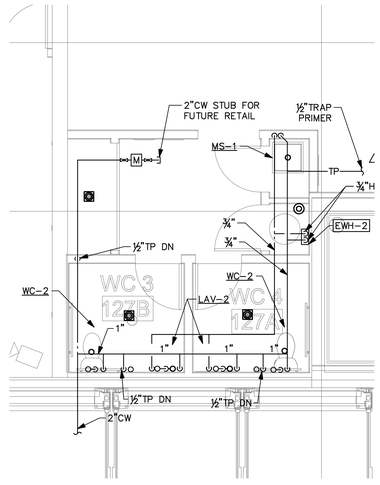

FLEX SPACE PUBLIC BATHROOM

ENLARGED PLAN

SCALE: 1/4" = 1'-0"

4 P3.01

VAN METER WILLIAMS POLLACK LLP

ARCHITECTURE | URBAN DESIGN ■ SAN FRANCISCO | DENVER | MINNEAPOLIS

333 Bryant Street, Suite 300, San Francisco, CA 94107 T 415.974.5252

CIVIL ENGINEER

BKF - SAN JOSE
1730 N. FIRST ST. STE 600
SAN JOSE, CA 95112

LANDSCAPE ARCHITECT

PLURAL STUDIO
2742 17TH STREET
SAN FRANCISCO, CA 94110

STRUCTURAL ENGINEER

HOHBACH-LEWIN
250 SHERIDAN AVE STE 100
PALO ALTO, CA 94306

MEP ENGINEER

EMERALD CITY ENGINEERS
21705 HIGHWAY 99
LYNWOOD, WA 98036

SUSTAINABILITY/ENERGY

REDWOOD ENERGY
1887 Q STREET
ARCATA, CA 95521

EMERALD CITY ENGINEERS, INC
21705 Highway 99
Lynnwood, WA 98036
TEL: 425-741-1200

REGISTERED PROFESSIONAL ENGINEER
MASSAMAGHAN KONAKTI
No. 32826
EXP: 03-31-24
MECHANICAL
STATE OF CALIFORNIA

07/27/23

ID	DATE	NAME
1	11/11/22	PERMIT SET - CONV
A	12/16/22	BID SET
B	03/20/23	BID ADDENDUM SET
2	03/20/23	PLAN CHECK COMMENT RESPONSES SET
3	05/18/23	PLAN CHECK COMMENT RESPONSES SET
3	06/12/23	GRADING PERMIT
4	07/27/23	BUILDING RESUBMITTAL

Project:

EDUCATOR HOUSING
231 GRANT AVENUE

231 GRANT AVENUE
PALO ALTO, CA 94306

Client:

MERCY HOUSING/
ABODE COMMUNITIES

ENLARGED PLANS

COUNTY OF SANTA CLARA
BUILDING INSPECTION OFFICE
PLANS APPROVED FOR PERMIT

RECORD NO.: DEV22-1242

BY: Warren Krause Date: 7/28/2023

HARD COPY OF THESE STAMPED PLANS MUST BE ON THE SITE FOR INSPECTIONS

JOB #: 2293-007

SCALE:

P3.01

GRADING PERMIT | DATE: 06/12/2023

COPYRIGHT 2023, EMERALD CITY ENGINEERS, INC.
K:\STEPHENS A\2293-007 231 GRANT, PALO ALTO, CA\DWG\P3D\ ENLARGED PLANS.DWG 03-16-2023 10:03

NOTES:

1. REFER TO DETAIL 4 ON SHEET P4.03 FOR WATER HEATER T&P RELIEF ROUTING TO AN INDIRECT DRAIN.
2. REFER TO DETAIL 12 ON SHEET P4.02 FOR HUB DRAIN PIPING.

FLAG NOTES:

1 HVAC EQUIPMENT (REF).

2 REMOTE SUBMETER DISPLAY. MOUNT NO HIGHER THAN 48" AFF.

WATER PIPE SIZING TABLE		
FIXTURE	HOT WATER	COLD WATER
LAV–1 (0.75 FU)	½"	½"
WC–1 (2.50 FU)	–	½"
BATH–1 (3.00 FU)	½"	½"
SH–1 (3.00 FU)	½"	½"
SK–1 (1.25 FU)	½"	½"
CLOTHES WASHER (2.25 FU)	½"	½"

NOTE: SIZING APPLIES TO ALL UNIT PLANS.

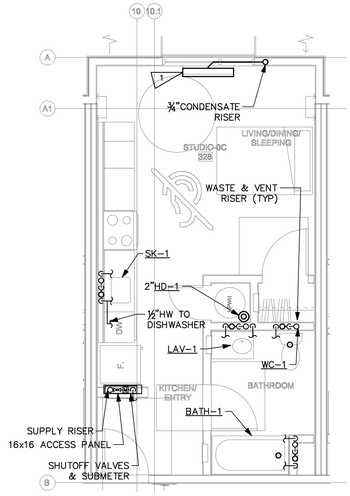

STUDIO–0C

ENLARGED PLAN

SCALE: 1/4" = 1'–0"

3 P3.02

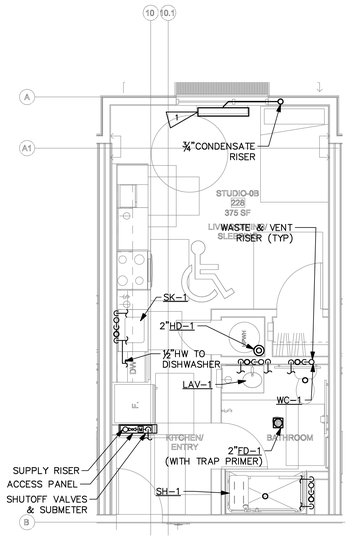

STUDIO–0B ADA

ENLARGED PLAN

SCALE: 1/4" = 1'–0"

2 P3.02

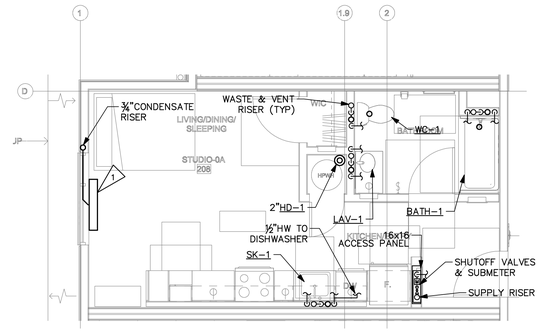

STUDIO–0A

ENLARGED PLAN

SCALE: 1/4" = 1'–0"

1 P3.02

VAN METER WILLIAMS POLLACK LLP

ARCHITECTURE | URBAN DESIGN ■ SAN FRANCISCO | DENVER | MINNEAPOLIS

333 Bryant Street, Suite 300, San Francisco, CA 94107 T 415.974.5282

☐ **CIVIL ENGINEER**

BKF - SAN JOSE
1730 N. FIRST ST. STE 600
SAN JOSE, CA 95112

☐ **LANDSCAPE ARCHITECT**

PLURAL STUDIO
2742 17TH STREET
SAN FRANCISCO, CA 94110

☐ **STRUCTURAL ENGINEER**

HOHBACH-LEWIN
250 SHERIDAN AVE STE 100
PALO ALTO, CA 94306

☐ **MEP ENGINEER**

EMERALD CITY ENGINEERS
21705 HIGHWAY 99
LYNWOOD, WA 98036

☐ **SUSTAINABILITY/ENERGY**

REDWOOD ENERGY
1887 Q STREET
ARCATA, CA 95521

EMERALD CITY ENGINEERS, INC
21705 Highway 99
Lynnwood, WA 98036
TEL: 425-741-1200

REGISTERED PROFESSIONAL ENGINEER MASSAMAGHAN KONG No. M 32845 EXP. 03-31-24 MECHANICAL STATE OF CALIFORNIA

07/27/23

ID	DATE	NAME
1	11/11/22	PERMIT SET - CONV
A	12/16/22	BID SET
B	03/20/23	BID ADDENDUM SET
2	03/20/23	PLAN CHECK COMMENT RESPONSES SET
3	05/18/23	PLAN CHECK COMMENT RESPONSES SET
3	06/12/23	GRADING PERMIT
4	07/27/23	BUILDING RESUBMITTAL

Project:

EDUCATOR HOUSING 231 GRANT AVENUE

231 GRANT AVENUE
PALO ALTO, CA 94306

Client:

MERCY HOUSING/
ABODE COMMUNITIES

ENLARGED UNIT PLANS

COUNTY OF SANTA CLARA
BUILDING INSPECTION OFFICE
PLANS APPROVED FOR PERMIT

RECORD NO.: DEV22-1242

BY: Warren Krause Date: 7/28/2023

HARD COPY OF THESE STAMPED PLANS MUST BE ON THE SITE FOR INSPECTIONS

JOB #: 2293-007

SCALE:

P3.02

GRADING PERMIT | DATE: 06/12/2023

COPYRIGHT 2023, EMERALD CITY ENGINEERS, INC.
X:\PROJECTS\2293-007 231 GRANT, PALO ALTO, CA\MEP\P302 ENLARGED UNIT PLANS.DWG 03-16-2023 10:01

FLAG NOTES:

1. HVAC EQUIPMENT (REF).
2. REMOTE SUBMETER DISPLAY. MOUNT NO HIGHER THAN 48" AFF.

WATER PIPE SIZING TABLE		
FIXTURE	HOT WATER	COLD WATER
LAV–1 (0.75 FU)	½"	½"
WC–1 (2.50 FU)	–	½"
BATH–1 (3.00 FU)	½"	½"
SH–1 (3.00 FU)	½"	½"
SK–1 (1.25 FU)	½"	½"
CLOTHES WASHER (2.25 FU)	½"	½"

NOTE: SIZING APPLIES TO ALL UNIT PLANS.

NOTES:

1. REFER TO DETAIL 4 ON SHEET P4.03 FOR WATER HEATER T&P RELIEF ROUTING TO AN INDIRECT DRAIN.
2. REFER TO DETAIL 12 ON SHEET P4.02 FOR HUB DRAIN PIPING.

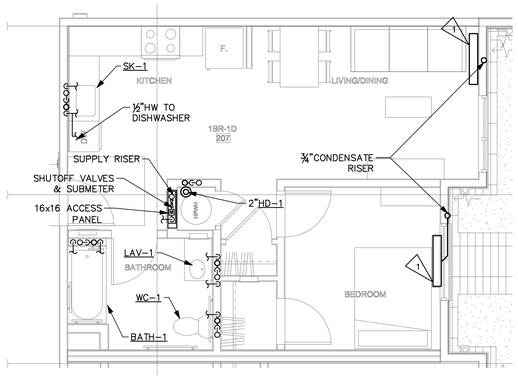

1BR–1D

ENLARGED PLAN

SCALE: 1/4" = 1'–0"

4 P3.03

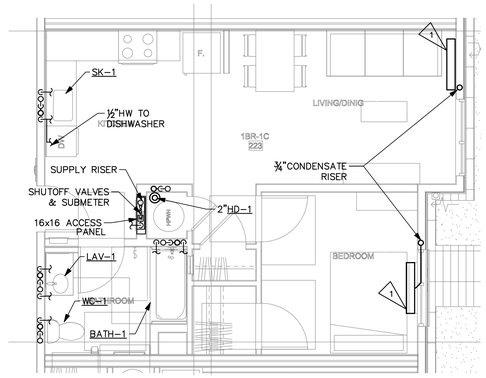

1BR–1C

ENLARGED PLAN

SCALE: 1/4" = 1'–0"

3 P3.03

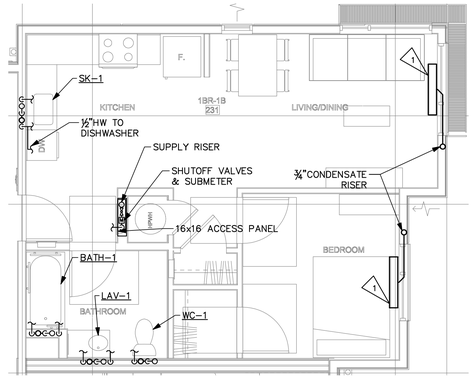

1BR–1B

ENLARGED PLAN

SCALE: 1/4" = 1'–0"

2 P3.03

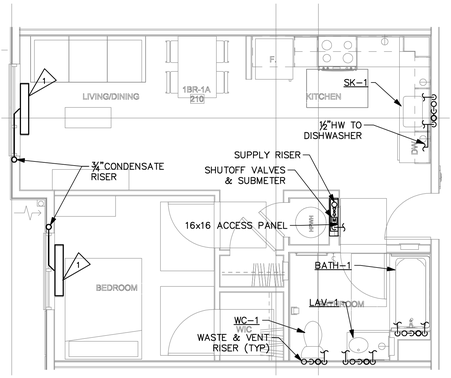

1BR–1A

ENLARGED PLAN

SCALE: 1/4" = 1'–0"

1 P3.03

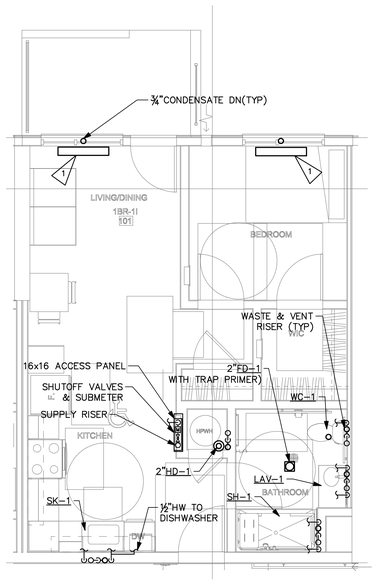

1 BR ADA

ENLARGED PLAN

SCALE: 1/4" = 1'–0"

7 P3.03

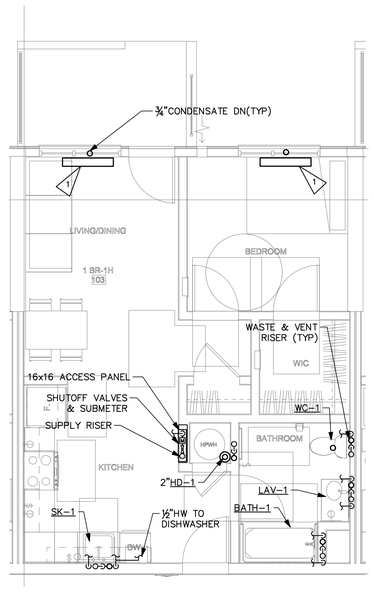

1 BR

ENLARGED PLAN

SCALE: 1/4" = 1'–0"

6 P3.03

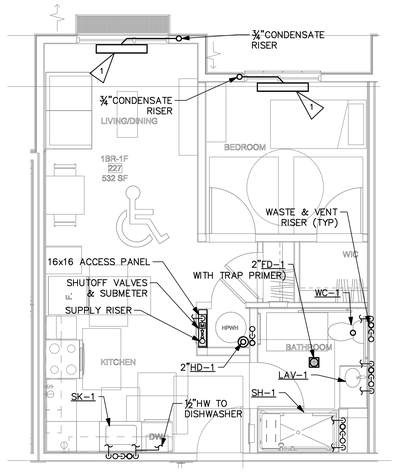

1 BR–1F ADA

ENLARGED PLAN

SCALE: 1/4" = 1'–0"

5 P3.03

COUNTY OF SANTA CLARA
BUILDING INSPECTION OFFICE
PLANS APPROVED FOR PERMIT
RECORD NO.: DEV22-1242
BY: Warren Krause Date: 7/28/2023
HARD COPY OF THESE STAMPED PLANS MUST BE ON THE SITE FOR INSPECTIONS

COPYRIGHT 2023, EMERALD CITY ENGINEERS, INC.
K:\STEPHENS A\2293-007 231 GRANT, PALO ALTO, CA\DWG\P303 ENLARGED UNIT PLANS.DWG 03-16-2023 10:01

VAN METER WILLIAMS POLLACK LLP
ARCHITECTURE | URBAN DESIGN ■ SAN FRANCISCO | DENVER | MINNEAPOLIS
333 Bryant Street, Suite 300, San Francisco, CA 94107 T 415.974.5282

☐ CIVIL ENGINEER

BKF - SAN JOSE
1730 N. FIRST ST. STE 600
SAN JOSE, CA 95112

☐ LANDSCAPE ARCHITECT

PLURAL STUDIO
2742 17TH STREET
SAN FRANCISCO, CA 94110

☐ STRUCTURAL ENGINEER

HOHBACH-LEWIN
250 SHERIDAN AVE STE 100
PALO ALTO, CA 94306

☐ MEP ENGINEER

EMERALD CITY ENGINEERS
21705 HIGHWAY 99
LYNWOOD, WA 98036

☐ SUSTAINABILITY/ENERGY

REDWOOD ENERGY
1887 Q STREET
ARCATA, CA 95521

EMERALD CITY ENGINEERS, INC
21705 Highway 99
Lynnwood, WA 98036
TEL: 425-741-1200

REGISTERED PROFESSIONAL ENGINEER
MASSAMAGHAN KONGTHAI
No. 22626
EXP: 03-31-24
MECHANICAL
STATE OF CALIFORNIA

07/27/23

ID	DATE	NAME
1	11/11/22	PERMIT SET - CONV
A	12/16/22	BID SET
B	03/20/23	BID ADDENDUM SET
2	03/20/23	PLAN CHECK COMMENT RESPONSES SET
3	05/18/23	PLAN CHECK COMMENT RESPONSES SET
3	06/12/23	GRADING PERMIT
4	07/27/23	BUILDING RESUBMITTAL

Project:

EDUCATOR HOUSING
231 GRANT AVENUE

231 GRANT AVENUE
PALO ALTO, CA 94306

Client:

MERCY HOUSING/
ABODE COMMUNITIES

ENLARGED UNIT PLANS

JOB #: 2293-007

SCALE:

P3.03

GRADING PERMIT | DATE: 06/12/2023

FLAG NOTES:

1. HVAC EQUIPMENT (REF).
2. REMOTE SUBMETER DISPLAY. MOUNT NO HIGHER THAN 48" AFF.

WATER PIPE SIZING TABLE		
FIXTURE	HOT WATER	COLD WATER
LAV–1 (0.75 FU)	½"	½"
WC–1 (2.50 FU)	–	½"
BATH–1 (3.00 FU)	½"	½"
SH–1 (3.00 FU)	½"	½"
SK–1 (1.25 FU)	½"	½"
CLOTHES WASHER (2.25 FU)	½"	½"

NOTE: SIZING APPLIES TO ALL UNIT PLANS.

NOTES:

1. REFER TO DETAIL 4 ON SHEET P4.03 FOR WATER HEATER T&P RELIEF ROUTING TO AN INDIRECT DRAIN.
2. REFER TO DETAIL 12 ON SHEET P4.02 FOR HUB DRAIN PIPING.

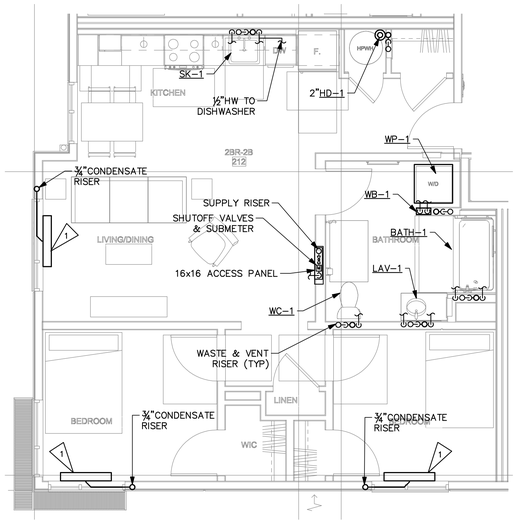

2 BED

ENLARGED PLAN

SCALE: 1/4" = 1'–0"

2 P3.04

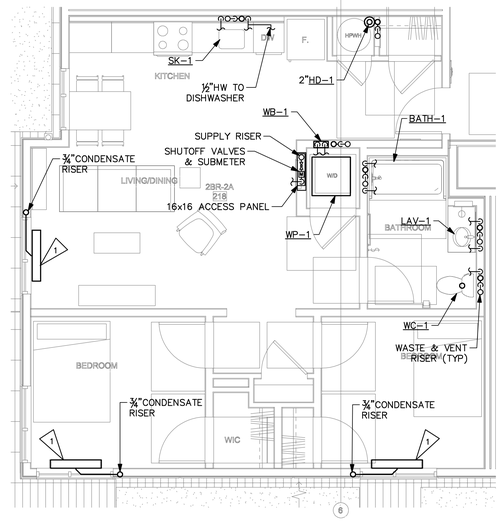

2 BR–2A

ENLARGED PLAN

SCALE: 1/4" = 1'–0"

1 P3.04

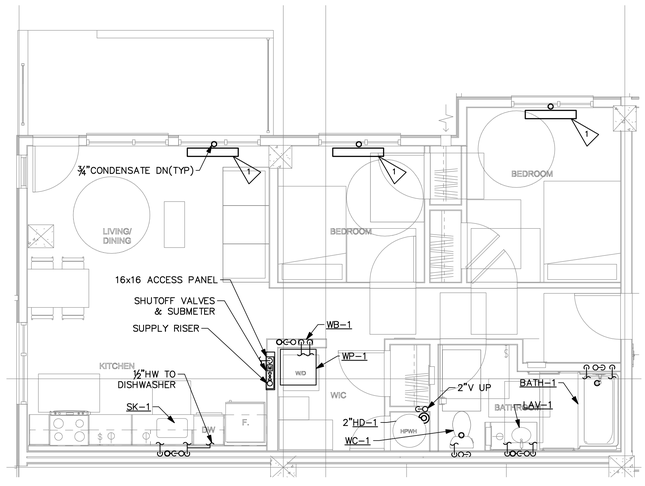

2 BR

ENLARGED PLAN

SCALE: 1/4" = 1'–0"

5 P3.04

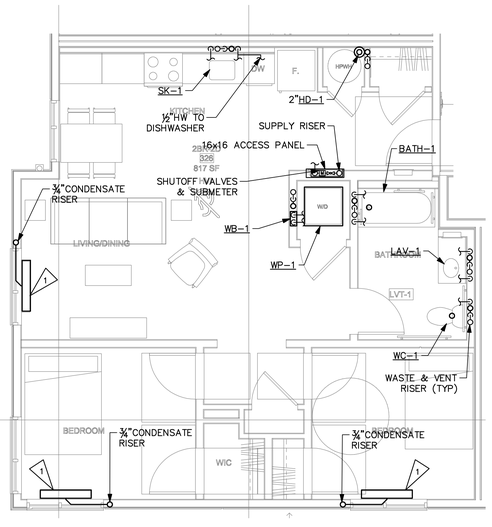

2 BR–2D

ENLARGED PLAN

SCALE: 1/4" = 1'–0"

4 P3.04

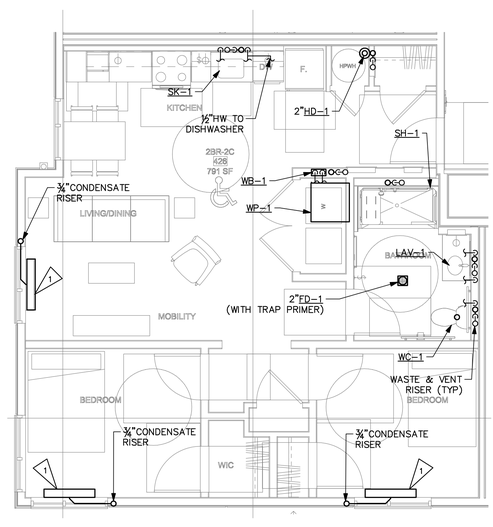

2 BR–2C ADA

ENLARGED PLAN

SCALE: 1/4" = 1'–0"

3 P3.04

COUNTY OF SANTA CLARA
BUILDING INSPECTION DIVISION
PLANS APPROVED FOR PERMIT
RECORD NO.: DEV22-1242
BY: Warren Krause Date: 7/28/2023
HARD COPY OF THESE STAMPED PLANS MUST BE ON THE SITE FOR INSPECTIONS

COPYRIGHT 2023, EMERALD CITY ENGINEERS, INC.
K:\STEPHENS A\2293-007 231 GRANT, PALO ALTO, CA\DWG\P304 ENLARGED UNIT PLANS.DWG 03-16-2023 10:00

VAN METER WILLIAMS POLLACK LLP
ARCHITECTURE | URBAN DESIGN ■ SAN FRANCISCO | DENVER | MINNEAPOLIS
333 Bryant Street, Suite 300, San Francisco, CA 94107 T 415.974.5252

☐ CIVIL ENGINEER

BKF - SAN JOSE
1730 N. FIRST ST. STE 600
SAN JOSE, CA 95112

☐ LANDSCAPE ARCHITECT

PLURAL STUDIO
2742 17TH STREET
SAN FRANCISCO, CA 94110

☐ STRUCTURAL ENGINEER

HOHBACH-LEWIN
250 SHERIDAN AVE STE 100
PALO ALTO, CA 94306

☐ MEP ENGINEER

EMERALD CITY ENGINEERS
21705 HIGHWAY 99
LYNWOOD, WA 98036

☐ SUSTAINABILITY/ENERGY

REDWOOD ENERGY
1887 Q STREET
ARCATA, CA 95521

EMERALD CITY ENGINEERS, INC
21705 Highway 99
Lynnwood, WA 98036
TEL: 425-741-1200

REGISTERED PROFESSIONAL ENGINEER
MASSAMAGHAN KOHLER
No. M 32866
EXP: 03-31-24
MECHANICAL
STATE OF CALIFORNIA

07/27/23

ID	DATE	NAME
1	11/11/22	PERMIT SET - CONV
A	12/16/22	BID SET
B	03/20/23	BID ADDENDUM SET
2	03/20/23	PLAN CHECK COMMENT RESPONSES SET
3	05/18/23	PLAN CHECK COMMENT RESPONSES SET
3	06/12/23	GRADING PERMIT
4	07/27/23	BUILDING RESUBMITTAL

Project:

EDUCATOR HOUSING
231 GRANT AVENUE

231 GRANT AVENUE
PALO ALTO, CA 94306

Client:

mercy HOUSING
abode communities
MERCY HOUSING/
ABODE COMMUNITIES

ENLARGED UNIT PLANS

JOB #: 2293-007

SCALE:

P3.04

GRADING PERMIT | DATE: 06/12/2023

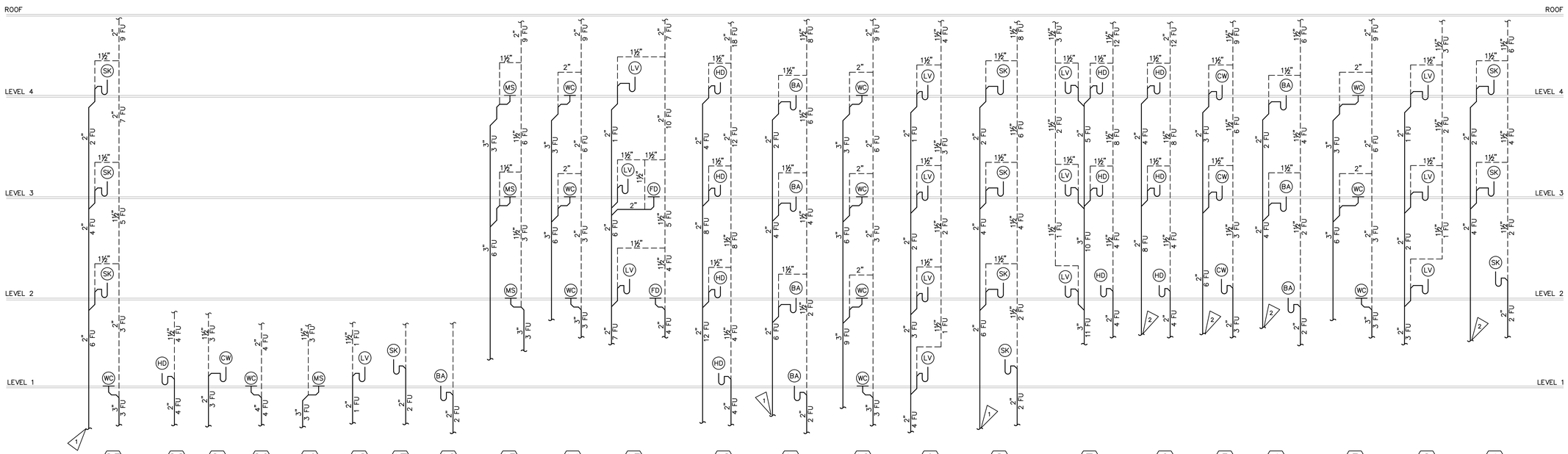

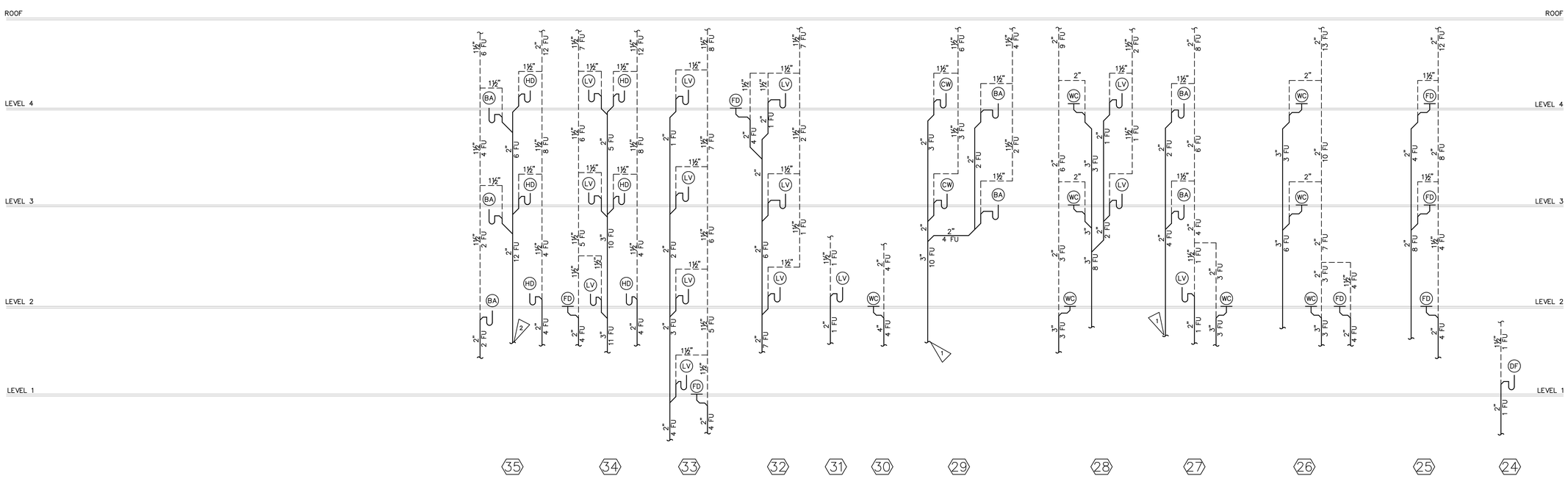

FLAG NOTES

1. PROVIDE SUDS RELIEF FOR 4-STORY BUILDINGS PER CPC 711.0. SEE DETAIL 1 ON DWG P4.03.
2. PROVIDE SUDS RELIEF FOR 4-STORY BUILDINGS PER CPC 711.0. SEE DETAIL 1 ON DWG P4.03.

LAVATORY = (1 FU)
WATER CLOSET = (3 FU)
SHOWER = (2 FU)
BATHTUB = (2 FU)

KITCHEN SINK = (2 FU)
FLOOR DRAIN = (4 OR 8 FU))

WASTE & VENT RISER DIAGRAMS

SCALE: NONE

1 P4.00

COUNTY OF SANTA CLARA
BUILDING INSPECTION OFFICE
PLANS APPROVED FOR PERMIT
RECORD NO.: DEV22-1242
BY: Warren Krause Date: 7/28/2023
HARD COPY OF THESE STAMPED PLANS MUST BE ON THE SITE FOR INSPECTIONS

COPYRIGHT 2023, EMERALD CITY ENGINEERS, INC.
K:\STEPHENS A\2293-007 231 GRANT, PALO ALTO, CA\DWG\P400 DETAILS & DIAGRAMS.DWG 03-16-2023 10:00

VAN METER WILLIAMS POLLACK LLP
ARCHITECTURE | URBAN DESIGN | SAN FRANCISCO | DENVER | MINNEAPOLIS
333 Bryant Street, Suite 300, San Francisco, CA 94107 T 415.974.5252

☐ CIVIL ENGINEER
BKF - SAN JOSE
1730 N. FIRST ST. STE 600
SAN JOSE, CA 95112

☐ LANDSCAPE ARCHITECT
PLURAL STUDIO
2742 17TH STREET
SAN FRANCISCO, CA 94110

☐ STRUCTURAL ENGINEER
HOHBACH-LEWIN
250 SHERIDAN AVE STE 100
PALO ALTO, CA 94306

☐ MEP ENGINEER
EMERALD CITY ENGINEERS
21705 HIGHWAY 99
LYNWOOD, WA 98036

☐ SUSTAINABILITY/ENERGY
REDWOOD ENERGY
1887 Q STREET
ARCATA, CA 95521

EMERALD CITY ENGINEERS, INC
21705 Highway 99
Lynnwood, WA 98036
TEL: 425-741-1200

REGISTERED PROFESSIONAL ENGINEER
MASS/MAGHAN KONRATH
No. 36866
EXP: 03-31-24
MECHANICAL
STATE OF CALIFORNIA

07/27/23

ID	DATE	NAME
1	11/11/22	PERMIT SET - CONV
A	12/16/22	BID SET
B	03/20/23	BID ADDENDUM SET
2	03/20/23	PLAN CHECK COMMENT RESPONSES SET
3	05/18/23	PLAN CHECK COMMENT RESPONSES SET
3	06/12/23	GRADING PERMIT
4	07/27/23	BUILDING RESUBMITTAL

Project:

EDUCATOR HOUSING
231 GRANT AVENUE

231 GRANT AVENUE
PALO ALTO, CA 94306

Client:

MERCY HOUSING/
ABODE COMMUNITIES

DETAILS &
DIAGRAMS

JOB #: 2293-007

SCALE:

P4.00

GRADING PERMIT | DATE: 06/12/2023

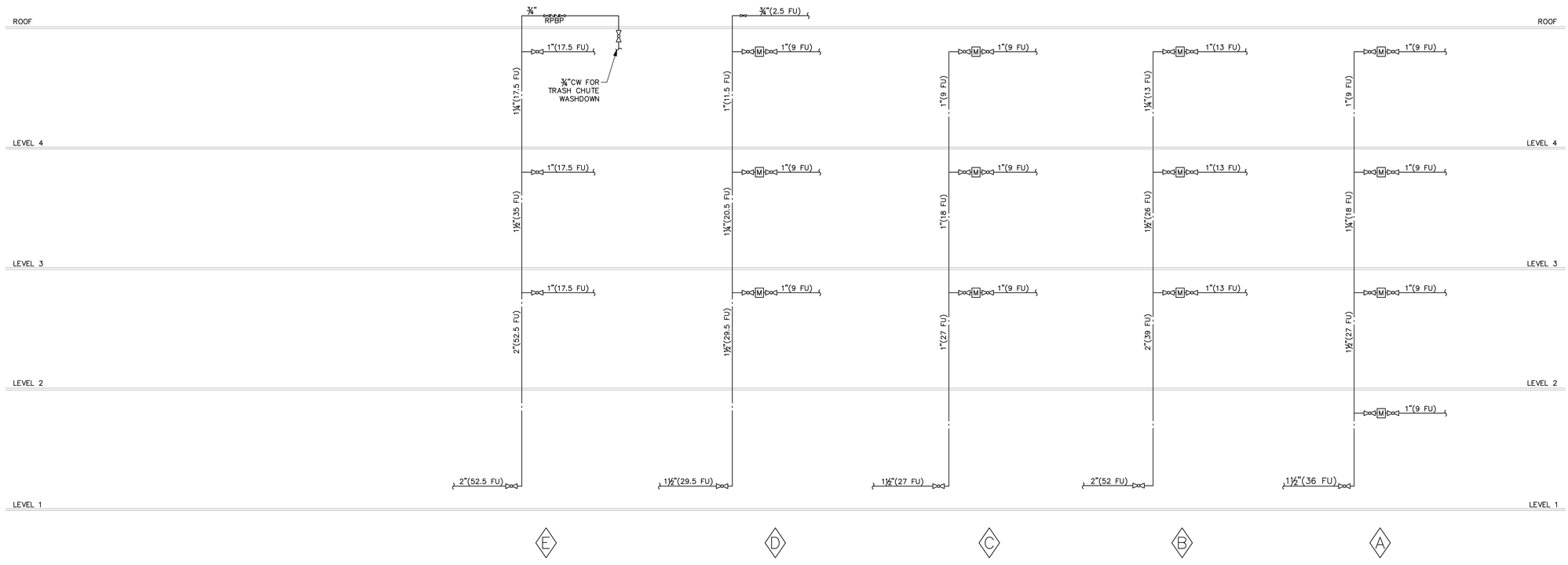

NOTE: PROVIDE SUFFICIENT CONNECTIONS (SWING JOINTS, ETC.) TO PROTECT THE PIPING FROM STRAIN AND STRESS DUE TO MULTISTORY BUILDING EXPANSION AND CONTRACTION.

REFER TO ENLARGED PLANS FOR EXTENSION OF PIPING INSIDE RESIDENTIAL UNITS.

REFER TO FLOOR PLANS FOR WATER SUPPLY RISER CONNECTIONS TO MAINS.

SUBMETERS TO BE MOUNTED NO HIGHER THAN 48" AFF. SUBMETERS MUST BE DIRECTLY VISIBLE BY OCCUPANTS.

WATER SUPPLY RISER DIAGRAMS

SCALE: NONE

1 / P4.01

COUNTY OF SANTA CLARA
BUILDING INSPECTION OFFICE
PLANS APPROVED FOR PERMIT

RECORD NO.: DEV22-1242

BY: Warren Krause Date: 7/28/2023

HARD COPY OF THESE STAMPED PLANS MUST BE ON THE SITE FOR INSPECTIONS

COPYRIGHT 2023, EMERALD CITY ENGINEERS, INC.
KSTEPHENS Z:\2293-007 231 GRANT, PALO ALTO, CA\DWG\P401 DETAILS & DIAGRAMS.DWG 03-16-2023 10:00

VAN METER WILLIAMS POLLACK LLP
ARCHITECTURE | URBAN DESIGN ■ SAN FRANCISCO | DENVER | MINNEAPOLIS
333 Bryant Street, Suite 300, San Francisco, CA 94107 T 415.974.5252

☐ **CIVIL ENGINEER**
BKF - SAN JOSE
1730 N. FIRST ST. STE 600
SAN JOSE, CA 95112

☐ **LANDSCAPE ARCHITECT**
PLURAL STUDIO
2742 17TH STREET
SAN FRANCISCO, CA 94110

☐ **STRUCTURAL ENGINEER**
HOHBACH-LEWIN
250 SHERIDAN AVE STE 100
PALO ALTO, CA 94306

☐ **MEP ENGINEER**
EMERALD CITY ENGINEERS
21705 HIGHWAY 99
LYNWOOD, WA 98036

☐ **SUSTAINABILITY/ENERGY**
REDWOOD ENERGY
1887 Q STREET
ARCATA, CA 95521

EMERALD CITY ENGINEERS, INC
21705 Highway 99
Lynnwood, WA 98036
TEL: 425-741-1200

REGISTERED PROFESSIONAL ENGINEER
MASSAMAGHAN KOMEILI
No. M 36846
EXP: 03-31-24
MECHANICAL
STATE OF CALIFORNIA

07/27/23

ID	DATE	NAME
1	11/11/22	PERMIT SET - CONV
A	12/16/22	BID SET
B	03/20/23	BID ADDENDUM SET
2	03/20/23	PLAN CHECK COMMENT RESPONSES SET
3	05/18/23	PLAN CHECK COMMENT RESPONSES SET
3	06/12/23	GRADING PERMIT
4	07/27/23	BUILDING RESUBMITTAL

Project:

EDUCATOR HOUSING
231 GRANT AVENUE

231 GRANT AVENUE
PALO ALTO, CA 94306

Client:

MERCY HOUSING/
ABODE COMMUNITIES

DETAILS &
DIAGRAMS

JOB #: 2293-007

SCALE:

P4.01

GRADING PERMIT | DATE: 06/12/2023

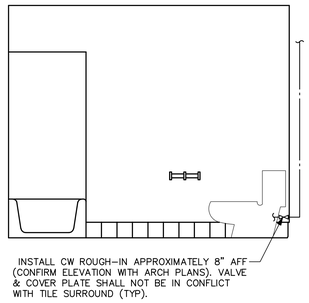

WATER CLOSET CW SUPPLY DETAIL

SCALE: NONE

5 / P4.02

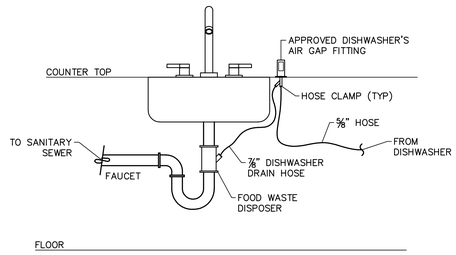

DISHWASHER DRAIN CONNECTION DETAIL

SCALE: NONE

4 / P4.02

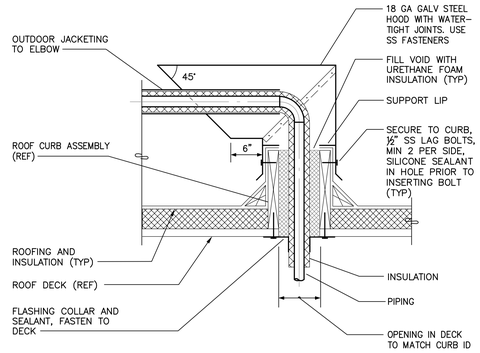

PIPE PENETRATION THROUGH ROOF DETAIL

SCALE: NONE

7 / P4.02

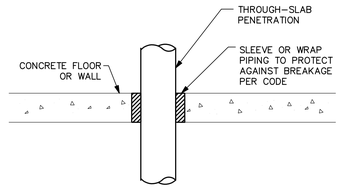

PIPE SLAB PENETRATION DETAIL

SCALE: NONE

1 / P4.02

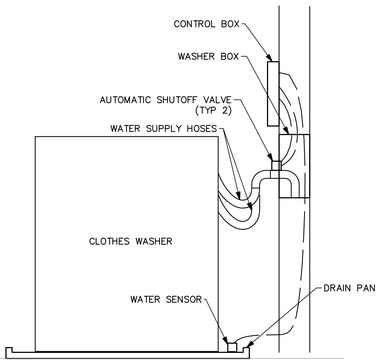

LAUNDRY TRAY WITH FLOOD STOP VALVE DETAIL

SCALE: NONE

8 / P4.02

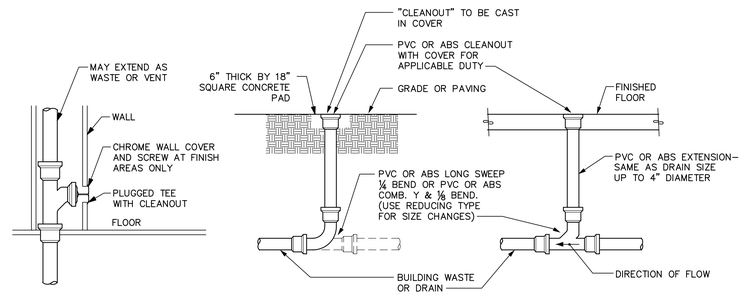

INTERIOR WALL CLEANOUT (WCO) EXTERIOR CLEANOUT TO GRADE (COTG) INTERIOR FLOOR CLEANOUT (FCO)

CLEANOUT DETAIL

SCALE: NONE

7 / P4.02

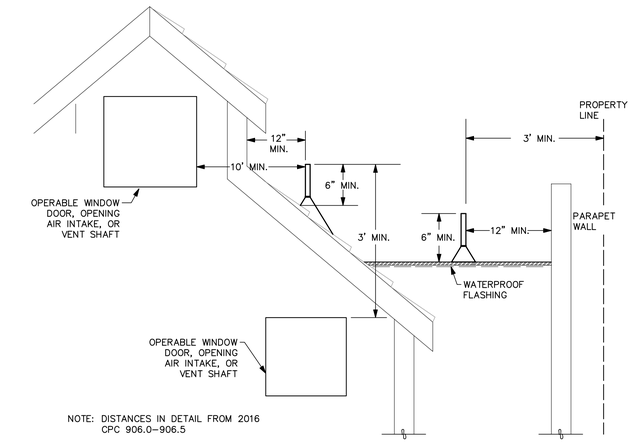

NOTE: DISTANCES IN DETAIL FROM 2016 CPC 906.0-906.5

VENT TERMINATION DETAIL

SCALE: NONE

6 / P4.02

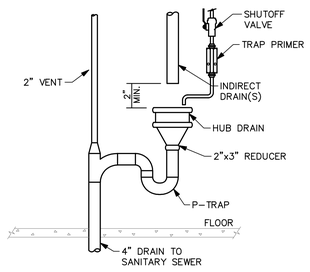

HUB DRAIN DETAIL

SCALE: NONE

12 / P4.02

HANGERS AND SUPPORTS: PIPE SPACING AND SUPPORT			
PIPE MATERIAL	TYPES OF JOINTS	HORIZONTAL	VERTICAL
CAST-IRON	SHIELDED COUPLING	EVERY OTHER JOINT, UNLESS OVER 4 FEET THEN SUPPORT EACH JOINT	BASE AND EACH FLOOR. NOT TO EXCEED 15 FEET
CPVC	SOLVENT CEMENTED	1 INCH AND SMALLER; 3 FEET 1¼ INCHES AND LARGER; 10 FEET	BASE AND EACH FLOOR. NOT TO EXCEED 15 FEET
PVC/ABS	SOLVENT CEMENTED	ALL SIZES, 4 FETT; ALLOW FOR EXPANSION EVERY 30'	BASE AND EACH FLOOR PROVDE MID STORY GUIDES; PROVIDE FOR EXPANSION EVERY 30'
STEEL,BRASS,TINNED COPPER FOR GAS	THREADED OR WELDED	½ INCH,6 FEET; ¾ INCH AND 1 INCH, 8 FEET;1¼ INCHES & LARGER, 10 FEET	½ INCH,6 FEET;¾ INCH AND 1 INCH, 8 FEET;1¼ INCHES EVERY FLOOR LEVEL
COPPER TUBE AND PIPE	SOLDERED OR BRAZED	1½ INCHES AND SMALLER, 6 FEET 2 INCHES AND LARGER, 10 FEET	½ INCH,6 FEET;¾ INCH AND 1 INCH, 8 FEET;1¼ INCHES EVERY FLOOR LEVEL

HANGER ROD SIZES	
PIPE SIZE (INCHES)	ROD SIZE (INCHES)
1/2 TO 4	3/8
5 TO 8	1/2
10 TO 12	5/8

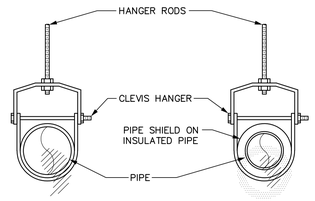

INDIVIDUAL PIPE SUPPORTS DETAIL

SCALE: NONE

10 / P4.02

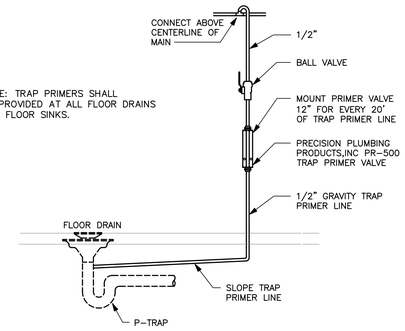

TRAP PRIMER DETAIL

SCALE: NONE

9 / P4.02

COUNTY OF SANTA CLARA
BUILDING INSPECTION OFFICE
PLANS APPROVED FOR PERMIT
RECORD NO.: DEV22-1242
BY: Warren Krause Date: 7/28/2023
HARD COPY OF THESE STAMPED PLANS MUST BE ON THE SITE FOR INSPECTIONS

COPYRIGHT 2023, EMERALD CITY ENGINEERS, INC.
K:\STEPHENS A\2293-007 231 GRANT, PALO ALTO, CA\DWG\P402 DETAILS & DIAGRAMS.DWG 03-16-2023 10:00

VAN METER WILLIAMS POLLACK LLP
ARCHITECTURE | URBAN DESIGN ■ SAN FRANCISCO | DENVER | MINNEAPOLIS
333 Bryant Street, Suite 300, San Francisco, CA 94107 T 415.974.5282

CIVIL ENGINEER
BKF - SAN JOSE
1730 N. FIRST ST. STE 600
SAN JOSE, CA 95112

LANDSCAPE ARCHITECT
PLURAL STUDIO
2742 17TH STREET
SAN FRANCISCO, CA 94110

STRUCTURAL ENGINEER
HOHBACH-LEWIN
250 SHERIDAN AVE STE 100
PALO ALTO, CA 94306

MEP ENGINEER
EMERALD CITY ENGINEERS
21705 HIGHWAY 99
LYNWOOD, WA 98036

SUSTAINABILITY/ENERGY
REDWOOD ENERGY
1887 Q STREET
ARCATA, CA 95521

EMERALD CITY ENGINEERS, INC
21705 Highway 99
Lynnwood, WA 98036
TEL: 425-741-1200

REGISTERED PROFESSIONAL ENGINEER — THOMAS MAGHAN KNOTTS — No. 28826 — EXP: 03-31-24 — MECHANICAL — STATE OF CALIFORNIA

07/27/23

ID	DATE	NAME
1	11/11/22	PERMIT SET - CONV
A	12/16/22	BID SET
B	03/20/23	BID ADDENDUM SET
2	03/20/23	PLAN CHECK COMMENT RESPONSES SET
3	05/18/23	PLAN CHECK COMMENT RESPONSES SET
3	06/12/23	GRADING PERMIT
4	07/27/23	BUILDING RESUBMITTAL

Project:

EDUCATOR HOUSING
231 GRANT AVENUE

231 GRANT AVENUE
PALO ALTO, CA 94306

Client:

MERCY HOUSING/
ABODE COMMUNITIES

DETAILS & DIAGRAMS

JOB #: 2293-007

SCALE:

P4.02

GRADING PERMIT | DATE: 06/12/2023

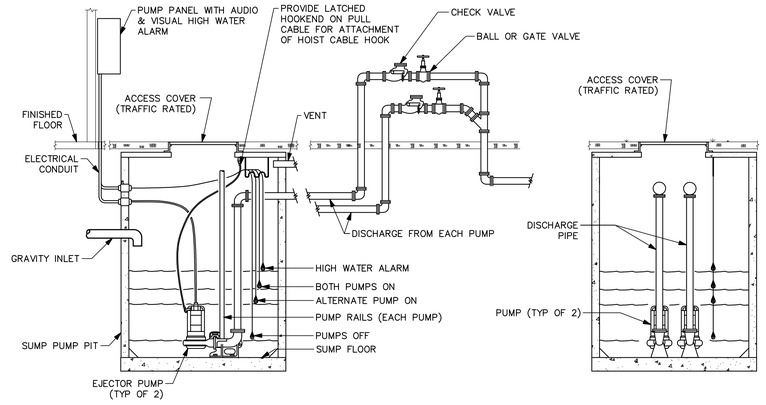

EPS-1 SUMP BASIN

LEVEL SENSOR ELEVATION SCHEDULE	
ITEM	DIM
SUMP COVER	83"
INLET PIPE IE AT SUMP WALL	42"
HIGH WATER ALARM	40"
LAG PUMP ON	36"
LEAD PUMP ON	24"
PUMPS OFF	12"
SUMP FLOOR	0"

DIMENSIONS ARE HEIGHTS ABOVE SUMP FLOOR

THE LOWEST INLET SHALL HAVE A CLEARANCE OF NOT LESS THAN 2 INCHES FROM THE HIGH WATER OR "STARTING" LEVEL OF THE SUMP.

SANITARY SEWER EJECTOR PUMP STATION DETAIL

SCALE: NONE

2 / P4.03

NOTES
ACW=AUTO CLOTHESWASHER

CLOTHESWASHERS ARE USED IN THESE DRAWINGS TO ILLUSTRATE AN EXAMPLE OF A SUDS PRODUCING FIXTURE. SECTION 711.0 REQUIRES THAT BATHTUBS, LAUNDRIES, WASHING MACHINE STANDPIPES, KITCHEN SINKS AND DISHWASHERS BE CONSIDERED AS SUDS-PRODUCING FIXTURES.

SECTION 711.0 STATES..."DRAINAGE CONNECTIONS SHALL NOT BE MADE INTO A DRAINAGE PIPING SYSTEM WITHIN EIGHT (8) FEET (2438 mm) OF ANY VERTICAL TO HORIZONTAL CHANGE OF DIRECTION OF A STACK CONTAINING SUDS-PRODUCING FIXTURES." PREVIOUS CODE WORDING USED THE PHRASE "FIXTURE CONNECTIONS" WHICH WAS DIFFICULT TO INTERPRET SINCE IT WAS NOT DEFINED IN CHAPTER 2. A "DRAINAGE CONNECTION" BY DICTIONARY DEFINITION IS SIMPLY ANY FITTING CONVEYING LIQUID WASTE OR SOIL INTO A DRAINAGE PIPING SYSTEM. SECTION 711 WOULD NOT PREVENT THE INSTALLATION OF A "VENTING CONNECTION" (OTHER THAN A REQUIRED PARALLEL VENT STACK) INSTALLED TO RELIEVE AIR PRESSURES IN THE SYSTEM WITHIN EIGHT FEET OF THE VERTICAL TO HORIZONTAL CHANGE IN DIRECTION.

CORRECT INSTALLATION

THE INSTALLATION AT LEFT IS A CORRECT ONE IN THAT IT MEETS THE REQUIREMENT OF THE SECOND EXCEPTION TO SECTION 711.0. THE CLOTHESWASHERS ON THE FIRST AND SECOND FLOOR ARE NOW SERVED BY A SEPARATE STACK. THE 3RD AND 4TH FLOORS ARE LIKEWISE SERVED BY A SEPARATE STACK. THE BASE OF EACH STACK RECEIVES THE DISCHARGE FROM LESS THAN 3 STORIES OF PLUMBING FIXTURES.

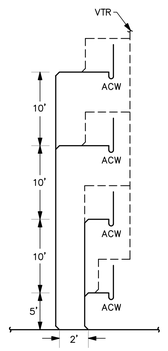

WASTE STACKS FOR 3 OR 4 STORY BUILDINGS DETAIL

SCALE: NONE

1 / P4.03

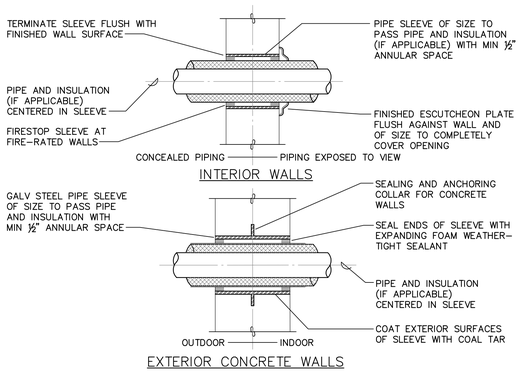

PIPE SLEEVES THROUGH WALLS DETAIL

SCALE: NONE

5 / P4.03

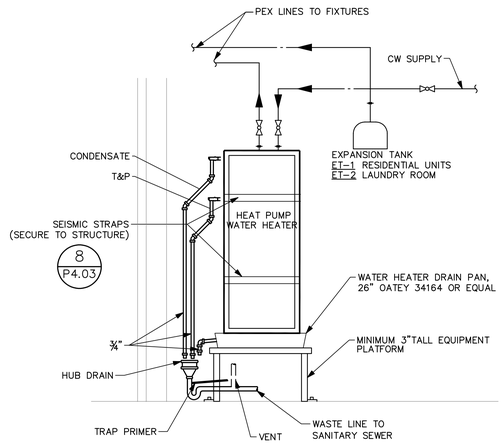

RESIDENTIAL UNIT WATER HEATER DETAIL

SCALE: NONE

4 / P4.03

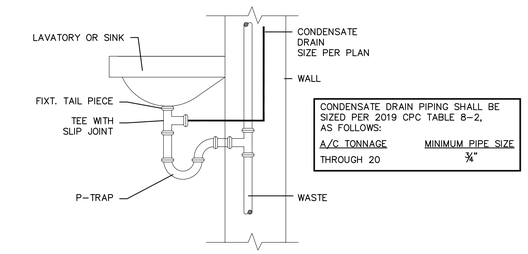

CONDENSATE DRAIN PIPING SHALL BE SIZED PER 2019 CPC TABLE 8-2, AS FOLLOWS:

A/C TONNAGE	MINIMUM PIPE SIZE
THROUGH 20	¾"

CONDENSATE TERMINATION AT LAV/SINK DETAIL

SCALE: NONE

3 / P4.03

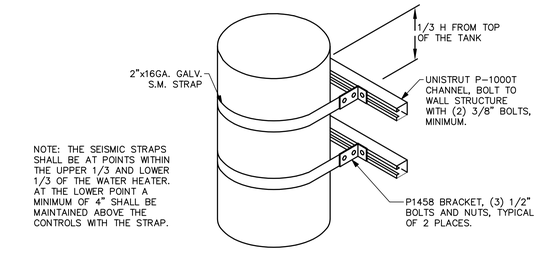

WATER HEATER SEISMIC STRAPPING DETAIL

SCALE: NONE

8 / P4.03

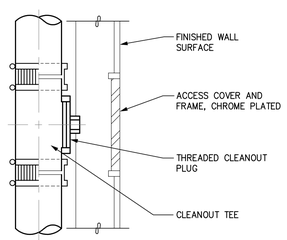

NOTE: PROVIDE MINIMUM AT BASE OF EACH RISER.

RAINLEADER AND OVERFLOW RAINLEADER CLEANOUT WITH ACCESS COVER DETAIL

SCALE: NONE

7 / P4.03

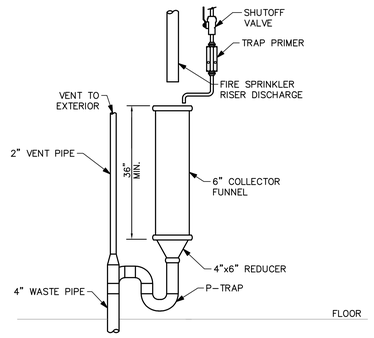

STANDPIPE DRAIN DETAIL

SCALE: NONE

6 / P4.03

COUNTY OF SANTA CLARA
BUILDING INSPECTION OFFICE
PLANS APPROVED FOR PERMIT
RECORD NO.: DEV22-1242
BY: Warren Krause Date: 7/28/2023
HARD COPY OF THESE STAMPED PLANS MUST BE ON THE SITE FOR INSPECTIONS

VAN METER WILLIAMS POLLACK LLP
ARCHITECTURE | URBAN DESIGN ■ SAN FRANCISCO | DENVER | MINNEAPOLIS
333 Bryant Street, Suite 300, San Francisco, CA 94107 T 415.974.5252

☐ CIVIL ENGINEER
BKF - SAN JOSE
1730 N. FIRST ST. STE 600
SAN JOSE, CA 95112

☐ LANDSCAPE ARCHITECT
PLURAL STUDIO
2742 17TH STREET
SAN FRANCISCO, CA 94110

☐ STRUCTURAL ENGINEER
HOHBACH-LEWIN
250 SHERIDAN AVE STE 100
PALO ALTO, CA 94306

☐ MEP ENGINEER
EMERALD CITY ENGINEERS
21705 HIGHWAY 99
LYNWOOD, WA 98036

☐ SUSTAINABILITY/ENERGY
REDWOOD ENERGY
1887 Q STREET
ARCATA, CA 95521

EMERALD CITY ENGINEERS, INC
21705 Highway 99
Lynnwood, WA 98036
TEL: 425-741-1200

REGISTERED PROFESSIONAL ENGINEER
THOMAS MAGHAN KNUTSEN
EXP: 03-31-24
MECHANICAL
STATE OF CALIFORNIA
07/27/23

ID	DATE	NAME
1	11/11/22	PERMIT SET - CONV
A	12/16/22	BID SET
B	03/20/23	BID ADDENDUM SET
2	03/20/23	PLAN CHECK COMMENT RESPONSES SET
3	05/18/23	PLAN CHECK COMMENT RESPONSES SET
3	06/12/23	GRADING PERMIT
4	07/27/23	BUILDING RESUBMITTAL

Project:

EDUCATOR HOUSING
231 GRANT AVENUE

231 GRANT AVENUE
PALO ALTO, CA 94306

Client:
MERCY HOUSING/
ABODE COMMUNITIES

DETAILS & DIAGRAMS

JOB #: 2293-007

SCALE:

P4.03

GRADING PERMIT | DATE: 06/12/2023

COPYRIGHT 2023, EMERALD CITY ENGINEERS, INC.

K:\STEPHENS A\2293-007 231 GRANT, PALO ALTO, CA\DWG\P403 DETAILS & DIAGRAMS.DWG 03-16-2023 10:00

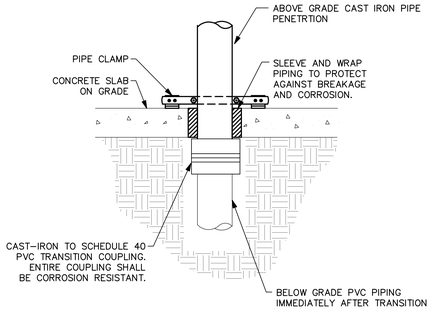

CAST IRON TO PVC UNDERGROUND PIPE TRANSITION

SCALE: NONE

3 P4.04

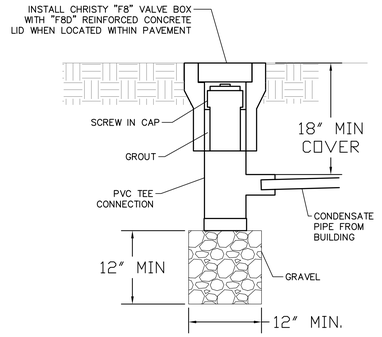

DRYWELL DETAIL

SCALE: NONE

2 P4.04

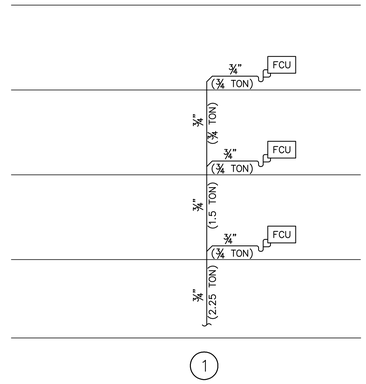

NOTES:

1. CONDENSATE SHALL BE PIPED TO SANITARY SYSTEM VIA. AIR GAP OR DISCHARGED TO LANDSCAPE.

CONDENSATE PIPE SIZING (CPC 2019 – TABLE 814.3)	
EQUIP. CAPACITY IN TONS OF REFRIGERATION	MIN CONDENSATE PIPE DIAMETER IN INCHES
UP TO 20	3/4
21–40	1
41–90	1–1/4

CONDENSATE RISERS

SCALE: NONE

1 P4.04

NOTE:
EXPANSION LOOP CALCULATION SIZES ARE FOR CPVC PIPING. IF ALTERNATE PIPING MATERIAL IS USED, CONTACT ENGINEER TO VERIFY EXPANSION LOOP SIZES.

Example: Pipe Size – ½ inch (12.7 mm) Length of Run – 60 feet (18288 mm): (38") (965 mm) (from table).

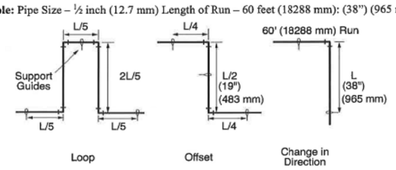

NOTE: INSTALL PIPE ANCHORS AT ENDS OF RUNS AND AT MIDPOINT BETWEEN EXPANSION LOOPS.

EMERALD CITY ENGINEERS
21705 HIGHWAY 99
LYNNWOOD, WA 98036

Project Name: 231 Grant
Project Number: 2293-007
Edited By: KS
Edit Date: 3.14.2023
Template Date: 5/2/2022

EXPANSION LOOP CALCULATIONS								
LOOP	PIPE TYPE	PIPE DIAMETER (IN)	PIPE RUN LENGTH (FT)	TEMP DIFF (F)	CHANGE IN LENGTH OF PIPE (IN)	EXPANSION LOOP LENGTH L (FT)	LOOP SECTION LENGTH (IN) L/5	2L/5
1	COLD WATER	6	50	40	0.99	4.72	12	24
2	COLD WATER	4	51	40	1.01	3.93	10	20
3	COLD WATER	4	52	40	1.03	3.97	10	20
4	COLD WATER	3	51	40	1.01	3.46	9	18
5	COLD WATER	3	50	40	0.99	3.43	9	18
6	COLD WATER	6	55	40	1.09	4.95	12	24
7	COLD WATER	1 1/4	40	40	0.79	2.11	6	12
8	COLD WATER	3	50	40	0.99	3.43	9	18
9	COLD WATER	3	51	40	1.01	3.46	9	18
10	COLD WATER	3	52	40	1.03	3.5	9	18
11	COLD WATER	2	64	40	1.26	3.19	8	16
12	COLD WATER	1 1/4	44	40	0.87	2.22	6	12
13	COLD WATER	2	51	40	1.01	2.85	7	14
14	COLD WATER	1 1/4	51	40	1.01	2.39	6	12
15	COLD WATER	1 1/4	54	40	1.07	2.46	6	12
16	COLD WATER	3	100	40	1.97	4.84	12	24

NOTE: LOOP DIMENSIONS CALCULATED FROM LARGEST DIAMETER PIPE IN LOOP.

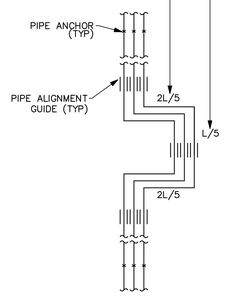

EXPANSION LOOP

EXPANSION LOOP SIZING

SCALE: NONE

4 P4.04

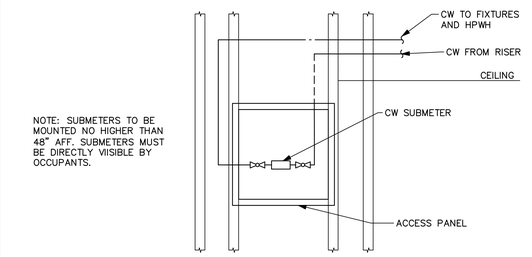

NOTE: SUBMETERS TO BE MOUNTED NO HIGHER THAN 48" AFF. SUBMETERS MUST BE DIRECTLY VIISIBLE BY OCCUPANTS.

SUBMETER VALVE ASSEMBLY DETAIL

SCALE: NONE

5 P4.04

COUNTY OF SANTA CLARA
BUILDING INSPECTION OFFICE
PLANS APPROVED FOR PERMIT
RECORD NO.: DEV22-1242
BY: Warren Krause Date: 7/28/2023
HARD COPY OF THESE STAMPED PLANS MUST BE ON THE SITE FOR INSPECTIONS

COPYRIGHT 2023, EMERALD CITY ENGINEERS, INC.
K:\STEPHENS A\2293-007 231 GRANT, PALO ALTO, CA\DWG\P4404 DETAILS & DIAGRAMS.DWG 05-30-2023 16:06

VAN METER WILLIAMS POLLACK LLP
ARCHITECTURE | URBAN DESIGN SAN FRANCISCO | DENVER | MINNEAPOLIS
333 Bryant Street, Suite 300, San Francisco, CA 94107 T 415.974.5282

CIVIL ENGINEER
BKF - SAN JOSE
1730 N. FIRST ST. STE 600
SAN JOSE, CA 95112

LANDSCAPE ARCHITECT
PLURAL STUDIO
2742 17TH STREET
SAN FRANCISCO, CA 94110

STRUCTURAL ENGINEER
HOHBACH-LEWIN
250 SHERIDAN AVE STE 100
PALO ALTO, CA 94306

MEP ENGINEER
EMERALD CITY ENGINEERS
21705 HIGHWAY 99
LYNWOOD, WA 98036

SUSTAINABILITY/ENERGY
REDWOOD ENERGY
1887 Q STREET
ARCATA, CA 95521

EMERALD CITY ENGINEERS, INC
21705 Highway 99
Lynnwood, WA 98036
TEL: 425-741-1200

REGISTERED PROFESSIONAL ENGINEER — KRISTOPHER MASSAGHAN KNUTSEN — EXP: 03-31-24 — MECHANICAL — STATE OF CALIFORNIA

07/27/23

ID	DATE	NAME
1	11/11/22	PERMIT SET - CONV
A	12/16/22	BID SET
B	03/20/23	BID ADDENDUM SET
2	03/20/23	PLAN CHECK COMMENT RESPONSES SET
3	05/18/23	PLAN CHECK COMMENT RESPONSES SET
3	06/12/23	GRADING PERMIT
4	07/27/23	BUILDING RESUBMITTAL

Project:

EDUCATOR HOUSING
231 GRANT AVENUE

231 GRANT AVENUE
PALO ALTO, CA 94306

Client:

MERCY HOUSING/
ABODE COMMUNITIES

DETAILS & DIAGRAMS

JOB #: 2293-007

SCALE:

P4.04

GRADING PERMIT | DATE: 06/12/2023

System No. W-L-5225

WL 5225

3. Pipe Covering* — Nom 1-1/2 in. (38 mm) thick hollow cylindrical heavy density (min 3.5 pcf or 56 kg/m3) glass fiber units jacketed on the outside with an all service jacket. Longitudinal joints sealed with metal fasteners or factory-applied self-sealing lap tape. Transverse joints secured with metal fasteners or with butt tape supplied with the product. A nom annular space of min 0 in. (point contact) to max 1 in. (25 mm) is required within the firestop system.
See Pipe and Equipment Covering - Materials (BRGU) category in the Building Materials Directory for names of manufacturers. Any pipe covering material meeting the above specifications and bearing the UL Classification Marking with a Flame Spread Index of 25 or less and a Smoke Developed Index of 50 or less may be used.

3A. Tube Insulation — Plastics+ — (Optional for pipes with nom diam of 2 in. (51 mm) or less) Max 1 in.(25 mm) thick acrylonitrile butadiene/polyvinyl chloride (AB/PVC) flexible foam furnished in the form of tubing. The annular space shall be min 1/8 in. to max 1/4 in. (3 to 6 mm).
See Plastics+ (QMFZ2)category in the Recognized Component Directory for names of manufacturers. Any Recognized Component tube insulation material meeting the above specifications and having a UL 94 Flammability Classification of 94-5VA may be used.
The hourly T, FT, FTH rating of the firestop system is equal to the hourly assembly rating of the wall assembly in which it is install unless Item 3 is used and nom pipe size is less than 4 in. (102 mm). For openings with Item 3 glass fiber insulation and pipe sizes less than 4 in (102 mm), when hourly rating for of the wall assembly is 1 hr, the T, FT, FTH rating is 1 hr. and when the hourly rating is of the wall assembly is 2 hr, then the T, FT, FTH Rating is 1-1/2 hr. The T, FT, FTH Rating Is 0 hr if Item 3A is less than 1 in. (25 mm) thick.

4. Firestop System — The firestop system shall consist of the following:
   A. Fill, Void or Cavity Material* - Sealant — Min 5/8 in. (16 mm) thickness of fill material applied within the annulus, flush with both surfaces of wall.
   HILTI CONSTRUCTION CHEMICALS, DIV OF HILTI INC — FS-ONE Sealant or FS-ONE MAX Intumescent Sealant
   B. Fill, Void or Cavity Material* — Wrap Strip — Nom 3/16 in. (5 mm) thick by 1-3/4 in. (44 mm) wide intumescent wrap strip. Layers individually wrapped around the through-penetrant with the ends butted and held in place with tape. Butted ends in successive layers shall be offset. Each wrap strip layer is to be installed flush with both surfaces of wall. Wrap strips are installed on each surface of the wall.

Product Designation	Max Pipe Size, in. (mm)	Number of Layers
CP648-E W25/1-3/4"	2 (51)	1
CP648-E W25/1-3/4"	4 (102)	3

   HILTI CONSTRUCTION CHEMICALS, DIV OF HILTI INC — CP-648E Wrap Strip
   C. Steel Collar — Steel collar fabricated from coils of precut min 0.016 in. (0.4 mm) thick (No. 28 gauge) galv steel available from fill material manufacturer. Collar shall be nom 1-3/4 in. (44 mm) deep with 1 in. (25 mm) wide by 2 in. (51 mm) long anchor tabs on 1-3/4 in. (44 mm) centers for securement to both surfaces of wall. In addition, collars contain retainer tabs 1/2 in. (13 mm) wide by 3/16 in. (5 mm) long, located opposite the anchor tabs. Collar shall be tightly wrapped over the wrap strip, overlapping min 1 in. (25 mm) at seam and compressed with a min 0.028 in. (0.7 mm) thick stainless steel band at collar mid-height. The retainer tabs are folded 90 deg towards the pipe to maintain the annular space around the pipe and to retain the wrap strip. Each tab of collar secured to surface of wall by means of nom 1-1/4 in. (32 mm) long steel laminating drywall screws in conjunction with 1-1/4 in. (32 mm) diam steel fender washers.

* Indicates such products shall bear the UL or cUL Certification Mark for jurisdictions employing the UL or cUL Certification (such as Canada), respectively.

Hilti Firestop Systems

Reproduced by HILTI, Inc. Courtesy of Underwriters Laboratories, Inc. January 23, 2015

Page: 2 of 2

CLASSIFIED UL
Classified by Underwriters Laboratories, Inc. to UL 1479

System No. W-L-5225

WL 5225

ANSI/UL1479 (ASTM E814)	CAN/ULC S115
F Rating — 1 or 2 Hr (See Item 1)	F Rating — 1 or 2 Hr (See Item 1)
T Rating — 0, 1, 1-1/2 or 2 Hr (See Item 3)	FT Rating — 0, 1, 1-1/2 or 2 Hr (See Item 3)
	FH Rating — 1 or 2 Hr (See Item 1)
	FTH Rating — 0, 1, 1-1/2 or 2 Hr (See Item 3)

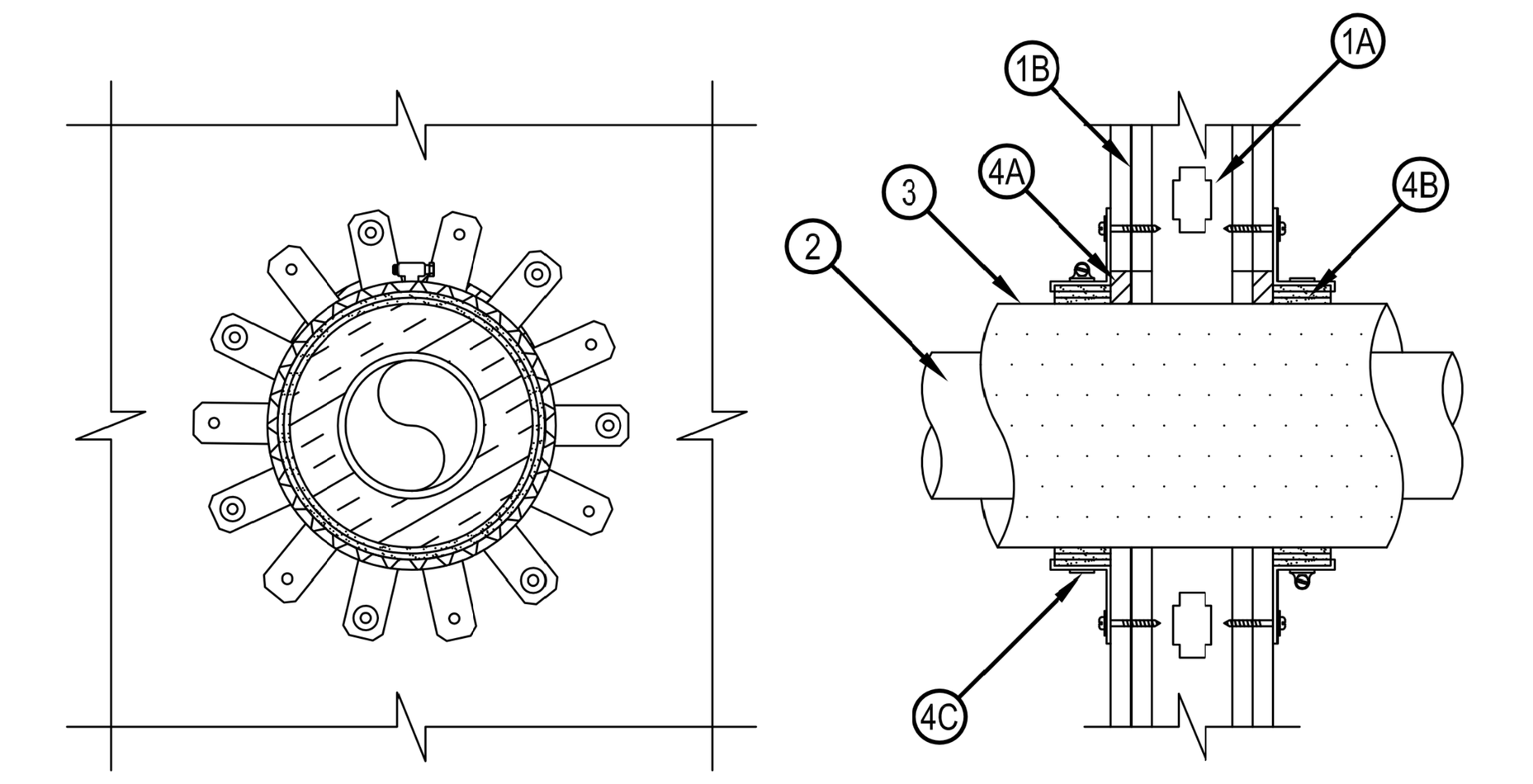

SECTION A-A

System tested with a pressure differential of 2.5 Pa between the exposed and the unexposed surfaces with the higher pressure on the exposed side.

1. Wall Assembly — The fire-rated gypsum board/stud wall assembly shall be constructed of the materials and in the manner specified in the individual U300, U400, V400 or W400 Series Wall and Partition Designs in the UL Fire Resistance Directory and shall include the following construction features:
   A. Studs — Wall framing may consist of either wood studs or steel channel studs. Wood studs to consist of nom 2 by 4 in. (51 by 102 mm) lumber spaced 16 in. OC (406 mm). Steel studs to be min 2-1/2 in. (64 mm) wide and spaced max 24 in. (610 mm) OC.
   B. Gypsum Board* — Thickness, type and number of layers as specified in the individual Wall and Partition Design. Max diam of opening is 8-1/2 in. (178 mm).
   The hourly F, FH Ratings of the firestop system are equal to the hourly assembly rating of the wall assembly in which it is installed.
2. Through Penetrants — One nonmetallic pipe or conduit to be centered within the firestop system. Pipe to be rigidly supported on both sides of wall. The following types and sizes of pipes may be used:
   A. Polyvinyl Chloride (PVC) Pipe — Nom 4 in. (102 mm) diam (or smaller) Schedule 40 cellular or solid core PVC pipe for use in closed (process or supply) or vented (drain, waste, or vent) piping systems.
   B. Chlorinated Polyvinyl Chloride (CPVC) Pipe — Nom 4 in. (102 mm) diam (or smaller) SDR 13.5 CPVC pipe for use in closed (process or supply) piping systems.

Hilti Firestop Systems

Reproduced by HILTI, Inc. Courtesy of Underwriters Laboratories, Inc. January 23, 2015

Page: 1 of 2

CPVC PIPING PENETRATION 4" AND SMALLER

DETAIL

SCALE: NONE

1
P4.05

CLASSIFIED UL
Classified by Underwriters Laboratories, Inc. to UL 1479

System No. C-AJ-2570

CAJ 2570

3. Firestop System — The firestop system shall consist of the following:
   A. Fill, Void or Cavity Material* — Wrap Strip - One layer of intumescent wrap strip is continuously wrapped around the pipe with ends held in place with tape. Wrap strip is to be secured to the pipe with the steel collar and then slid up the pipe so that the collar and the strip are extending 1/2 in. (13 mm) from the surface of the floor or wall.
   HILTI CONSTRUCTION CHEMICALS, DIV OF HILTI INC — CP648-S/6" Wrap Strip
   B. Steel Collar — Steel collar fabricated from coils of precut min 0.016 in. thick (No. 28 gauge) galv steel available from fill material manufacturer. Collar shall be nom 1-/34 in. (for 1-3/4 in. wide wrap strip) deep with a nominal 1/2 in. (13 mm) lip. A nom 1/2 in. (13 mm) wide stainless steel hose clamp shall be secured to the collar at its mid-height. Optional securement of the collar may be accomplished with two sheet metal screws screwed though the overlapping portion of the collar. The length of the sheet metal screws shall not exceed the thickness of the wrap strip.
   C. Fill, Void or Cavity Materials* — Sealant -Min 6 mm (1/4 in.) thickness of fill material applied within the annulus, flush with bottom surface of floor or both surfaces of wall.
   HILTI CONSTRUCTION CHEMICALS, DIV OF HILTI INC — FS-ONE Sealant or FS-ONE MAX Intumescent Sealant
   D. Fill, Void or Cavity Materials* - (Optional Not Shown) — Sealant -Min 6 mm (1/4 in.) thickness of fill material applied within the annulus, flush with top surface of floor or both surfaces of wall. W Rating only applies when Cp 604 sealant is used.
   HILTI CONSTRUCTION CHEMICALS, DIV OF HILTI INC — FS One or Hilti CP 604
   E. Fill, Void or Cavity Materials - (Optional Not Shown) — 1/2 in. (13 mm) Minimum depth mineral wool inserted into the annular space at the top of the floor or wall assembly.

+Bearing the UL Listing Mark

* Indicates such products shall bear the UL or cUL Certification Mark for jurisdictions employing the UL or cUL Certification (such as Canada), respectively.

Hilti Firestop Systems

Reproduced by HILTI, Inc. Courtesy of Underwriters Laboratories, Inc. January 09, 2015

Page: 2 of 2

CLASSIFIED UL
Classified by Underwriters Laboratories, Inc. to UL 1479

System No. C-AJ-2570

F Rating — 2 Hr
T Rating — 0 Hr
W Rating — Class 1 (See item 3)

CAJ 2570

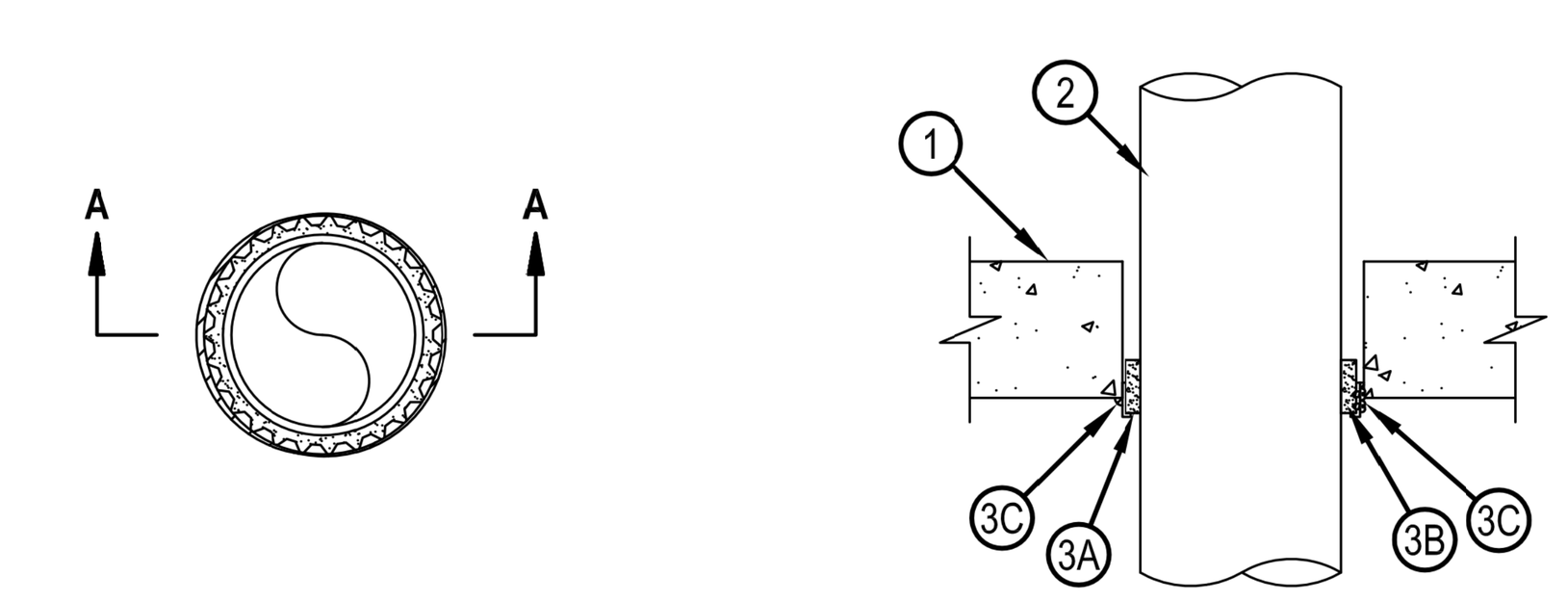

SECTION A-A

1. Floor or Wall Assembly — Min 4-1/2 in. (114 mm) thick reinforced lightweight or normal weight 100-150 pcf (1600-2400 kg/m3) concrete. Floor may also be constructed of any min 6 in. (152 mm) thick UL Classified hollow core Precast Concrete Units*. Wall may also be constructed of any UL Classified Concrete Blocks*. Max diam of opening is 8 in. (203 mm). Max diam of opening in floors constructed of hollow-core concrete is 7 in. (178 mm).
   See Concrete Blocks (CAZT) and Precast Concrete Units (CFTV) categories in the Fire Resistance Directory for names of manufacturers.
2. Through Penetrants — One nonmetallic pipe to be installed concentrically or eccentrically within the firestop system. Annular space between pipe and periphery of opening shall be min 1/2 in. (13 mm) to max 1 in. (25 mm). The following types and sizes of nonmetallic pipes may be used:
   A. Polyvinyl Chloride (PVC) Pipe — Nom 6 in (152 mm) diam (or smaller) Schedule 40 solid or cellular core PVC for use in closed (process or supply) or vented (drain, waste or vent) piping systems.
   B. Chlorinated Polyvinyl Chloride (CPVC) Pipe — Nom 6 in (152 mm) diam (or smaller) SDR13.5 CPVC for use in closed (process or supply) piping systems.
   C. Rigid Nonmetallic Conduit+ — Nom 6 in. (152mm) diam (or smaller) Schedule 40 PVC conduit installed in accordance with the National Electrical Code (NFPA No. 70).

Hilti Firestop Systems

Reproduced by HILTI, Inc. Courtesy of Underwriters Laboratories, Inc. January 09, 2015

Page: 1 of 2

CPVC PIPING PENETRATION 6" AND SMALLER

DETAIL

SCALE: NONE

2
P4.05

COUNTY OF SANTA CLARA
BUILDING INSPECTION OFFICE
PLANS APPROVED FOR PERMIT
RECORD NO.: DEV22-1242
BY: Warren Krause Date: 7/28/2023
HARD COPY OF THESE STAMPED PLANS MUST BE ON THE SITE FOR INSPECTIONS

COPYRIGHT 2023, EMERALD CITY ENGINEERS, INC.
KSTEPHENS J:\2293-007 231 GRANT, PALO ALTO, CA\DWG\P405 DETAILS & DIAGRAMS.DWG 03-16-2023 10:00

VAN METER WILLIAMS POLLACK LLP
ARCHITECTURE | URBAN DESIGN ■ SAN FRANCISCO | DENVER | MINNEAPOLIS
333 Bryant Street, Suite 300, San Francisco, CA 94107 T 415.974.5352

CIVIL ENGINEER
BKF - SAN JOSE
1730 N. FIRST ST. STE 600
SAN JOSE, CA 95112

LANDSCAPE ARCHITECT
PLURAL STUDIO
2742 17TH STREET
SAN FRANCISCO, CA 94110

STRUCTURAL ENGINEER
HOHBACH-LEWIN
250 SHERIDAN AVE STE 100
PALO ALTO, CA 94306

MEP ENGINEER
EMERALD CITY ENGINEERS
21705 HIGHWAY 99
LYNWOOD, WA 98036

SUSTAINABILITY/ENERGY
REDWOOD ENERGY
1887 Q STREET
ARCATA, CA 95521

EMERALD CITY ENGINEERS, INC
21705 Highway 99
Lynnwood, WA 98036
TEL: 425-741-1200

REGISTERED PROFESSIONAL ENGINEER
MASSAMAGHAN KONI
No. M38848
EXP. 03-31-24
MECHANICAL
STATE OF CALIFORNIA
07/27/23

ID	DATE	NAME
1	11/11/22	PERMIT SET - CONV
A	12/16/22	BID SET
B	03/20/23	BID ADDENDUM SET
2	03/20/23	PLAN CHECK COMMENT RESPONSES SET
3	05/18/23	PLAN CHECK COMMENT RESPONSES SET
3	06/12/23	GRADING PERMIT
4	07/27/23	BUILDING RESUBMITTAL

Project:

EDUCATOR HOUSING
231 GRANT AVENUE

231 GRANT AVENUE
PALO ALTO, CA 94306

Client:

mercy HOUSING
abode communities
MERCY HOUSING/
ABODE COMMUNITIES

DETAILS &
DIAGRAMS

JOB #: 2293-007

SCALE:

P4.05

GRADING PERMIT | DATE: 06/12/2023

System No. W-L-1056 WL 1056

Classified by Underwriters Laboratories, Inc. to UL 1479 and CAN/ULC-S115

ANSI/UL1479 (ASTM E814)	CAN/ULC S115
F Rating — 2 Hr	F Rating — 2 Hr
T Rating — 0 Hr	FT Rating — 0 Hr
L Rating At Ambient - Less Than 1 CFM/sq ft	FH Rating — 2 Hr
L Rating At 400 F - 4 CFM/sq ft	FTH Rating — 0 Hr
	L Rating At Ambient - Less Than 1 CFM/sq ft
	L Rating At 400 F - 4 CFM/sq ft

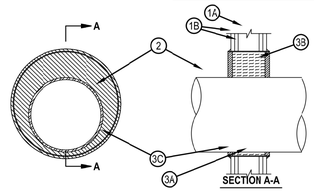

SECTION A-A

1. Wall Assembly — The fire-rated gypsum wallboard/stud wall assembly shall be constructed of the materials and in the manner specified in the individual U300 or U400 Series Wall and Partition Designs in the UL Fire Resistance Directory and shall include the following construction features:
   A. Studs — Wall framing may consist of either wood studs or steel channel studs. Wood studs to consist of nom 2 by 4 in. (51 by 102 mm) lumber spaced 16 in. (406 mm) OC. Steel studs to be min 2-1/2 in. (64 mm) wide and spaced max 24 in. (610 mm) OC.
   B. Gypsum Board* — Two layers of nom 5/8 in. (16 mm) thick gypsum wallboard, as specified in the individual Wall and Partition Design. Max diam of opening is 18-3/4 in. (476 mm).
2. Through Penetrants — One metallic pipe or tubing to be installed either concentrically or eccentrically within the firestop system. Pipe or tubing to be rigidly supported on both sides of wall assembly. The annular space shall be min 3/4 in. (19 mm) to max 4-1/2 in. (114 mm). The following types and sizes of metallic pipes or tubing may be used:
   A. Steel Pipe — Nom 12 in. (305 mm) diam (or smaller) Schedule 10 (or heavier) steel pipe.
   B. Iron Pipe — Nom 12 in. (305 mm) diam (or smaller) cast or ductile iron pipe.
   C. Copper Tubing — Nom 4 in. (102 mm) diam (or smaller) Type L (or heavier) copper tubing.
   D. Copper Pipe — Nom 4 in. (102 mm) diam (or smaller) Regular (or heavier) copper pipe.
3. Firestop System — The firestop system shall consist of the following:
   A. Metallic Sleeve — Cylindrical sleeve fabricated from min 0.028 in. thick (24 gauge) galv sheet steel and having a min 1 in. (25 mm) lap along the longitudinal seam. Length of steel sleeve to be 1 in. (25 mm) more than the overall thickness of the wall such that, when installed in circular opening, the ends of the sleeves project 1/2 in. (13 mm) from each surface of the wall. The diam of the openings cut in the gypsum wallboard layers on each side of the wall assembly to be 1-1/2 to 6 in. (38 to 152 mm) larger than outside diam of pipe such that, when the sleeve is installed, a 3/4 to 4-1/2 in. (19 to 114 mm) annular space will be present between the steel sleeve and the pipe around the entire circumference of the pipe. Sleeve installed by coiling the sheet steel to a diam smaller than the through opening, inserting the coil through the openings and releasing the coil to let it uncoil against the circular cutouts in the gypsum wallboard layers.

Hilti Firestop Systems

Reproduced by HILTI, Inc. Courtesy of Underwriters Laboratories, Inc. January 23, 2015

Page: 1 of 2

System No. W-L-1056 WL 1056

B. Packing Material — Min 4 in. thickness of min 4.0 pcf (64 kg/m3) mineral wool batt insulation firmly packed into opening as a permanent form. Packing material to be recessed from both surfaces of wall as required to accommodate the requirec thickness of fill material.
C. Fill, Void or Cavity Material* — Sealant — Min 3/4 in. (19 mm) thickness of tightly packed fill material applied within the annulus, flush with the ends of the steel sleeve. Additional fill material to be installed to the outer perimeter of the steel sleeve at its egress from the opening.
HILTI CONSTRUCTION CHEMICALS, DIV OF HILTI INC — FS-One Sealant or FS-ONE MAX Intumescent Sealant

* Indicates such products shall bear the UL or cUL Certification Mark for jurisdictions employing the UL or cUL Certification (such as Canada), respectively.

Hilti Firestop Systems

Reproduced by HILTI, Inc. Courtesy of Underwriters Laboratories, Inc. January 23, 2015

Page: 2 of 2

METALLIC PIPING PENETRATION 12" AND SMALLER DETAIL

SCALE: NONE

1 P4.06

System No. C-AJ-1150 CAJ 1150

Classified by Underwriters Laboratories, Inc. to UL 1479 and CAN/ULC-S115

ANSI/UL1479 (ASTM E814)	CAN/ULC S115
F Rating — 3 Hr	F Rating — 3 Hr
T Rating —0 Hr	FT Rating — 0 Hr
L Rating At Ambient — Less Than 1 CFM/sq ft	FH Rating — 3 Hr
L Rating At 400 F — 4 CFM/sq ft	FTH Rating — 0 Hr
W Rating — Class 1 (See Item 4)	L Rating At Ambient — Less Than 1 CFM/sq ft
	L Rating At 400 F — 4 CFM/sq ft

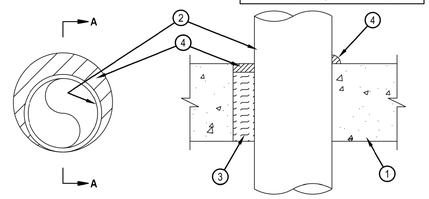

SECTION A-A

1. Floor or Wall Assembly — Min 4-1/2 in. (114 mm) thick reinforced lightweight or normal weight (100-150 pcf or 1600-2400 kg/m3) concrete. Wall may also be constructed of any UL Classified Concrete Blocks *. Max diam of opening is 8 in. (203 mm).
See Concrete Blocks (CAZT) category in the Fire Resistance Directory for names of manufacturers.
2. Through Penetrants — One metallic pipe or conduit to be installed within the firestop system. Pipe or conduit to be rigidly supported on both sides of floor or wall assembly. The annular space shall be min 0 in. (point contact) to max 1-3/8 in. (35 mm). The following types and sizes of metallic pipes or conduits may be used:
   A. Steel Pipe — Nom 6 in. (152 mm) diam (or smaller) Schedule 40 (or heavier) steel pipe.
   B. Iron Pipe — Nom 6 in. (152 mm) diam (or smaller) cast or ductile iron pipe.
   C. Conduit — Nom 4 in. (102 mm) diam (or smaller) steel electrical metallic tubing or nom 6 in. diam (or smaller) steel conduit.
3. Packing Material — Min 4 in. (102 mm) thickness of min 4 pcf (64 kg/m3) mineral wool batt insulation firmly packed into opening as a permanent form. Packing material to be recessed from top surface of floor or from both surfaces of wall to accommodate the required thickness of fill material.
4. Fill, Void or Cavity Material* — Sealant — Min 1/4 in. (6 mm) thickness of fill material applied within the annulus, flush with top surface of floor and with both surfaces of wall. At the point contact location between pipe and concrete, a min 1/2 in. (13 mm) diam bead of fill material shall be applied at the concrete/pipe interface on the top surface of floor and on both surfaces of wall. W Rating applies only when CFS-S SIL GG, CFS-S SIL SL (floors only), CP601S or CP604 sealant is used.
HILTI CONSTRUCTION CHEMICALS, DIV OF HILTI INC — CP601S, CP604, CFS-S SIL GG, CFS-S SIL SL (floors only), CP606 or FS-ONE Sealant or FS-ONE MAX Intumescent Sealant

* Indicates such products shall bear the UL or cUL Certification Mark for jurisdictions employing the UL or cUL Certification (such as Canada), respectively.

Hilti Firestop Systems

Reproduced by HILTI, Inc. Courtesy of Underwriters Laboratories, Inc. January 06, 2015

METALLIC PIPING PENETRATION 6" AND SMALLER DETAIL

SCALE: NONE

2 P4.06

COUNTY OF SANTA CLARA
BUILDING INSPECTION OFFICE
PLANS APPROVED FOR PERMIT

RECORD NO.: DEV22-1242

BY: Warren Krause Date: 7/28/2023

HARD COPY OF THESE STAMPED PLANS MUST BE ON THE SITE FOR INSPECTIONS

COPYRIGHT 2023, EMERALD CITY ENGINEERS, INC.
K:\PROJECTS\2293-007 231 GRANT, PALO ALTO, CA\DWG\P406 DETAILS & DIAGRAMS.DWG 03-16-2023 10:00

VAN METER WILLIAMS POLLACK LLP
ARCHITECTURE | URBAN DESIGN ■ SAN FRANCISCO | DENVER | MINNEAPOLIS
333 Bryant Street, Suite 300, San Francisco, CA 94107 T 415.974.5282

☐ CIVIL ENGINEER
BKF - SAN JOSE
1730 N. FIRST ST. STE 600
SAN JOSE, CA 95112

☐ LANDSCAPE ARCHITECT
PLURAL STUDIO
2742 17TH STREET
SAN FRANCISCO, CA 94110

☐ STRUCTURAL ENGINEER
HOHBACH-LEWIN
250 SHERIDAN AVE STE 100
PALO ALTO, CA 94306

☐ MEP ENGINEER
EMERALD CITY ENGINEERS
21705 HIGHWAY 99
LYNWOOD, WA 98036

☐ SUSTAINABILITY/ENERGY
REDWOOD ENERGY
1887 Q STREET
ARCATA, CA 95521

EMERALD CITY ENGINEERS, INC
21705 Highway 99
Lynnwood, WA 98036
TEL: 425-741-1200

REGISTERED PROFESSIONAL ENGINEER
MASSAMAGHAN KOHANIM
No. 22866
EXP: 03-31-24
MECHANICAL
STATE OF CALIFORNIA

07/27/23

ID	DATE	NAME
1	11/11/22	PERMIT SET - CONV
A	12/16/22	BID SET
B	03/20/23	BID ADDENDUM SET
2	03/20/23	PLAN CHECK COMMENT RESPONSES SET
3	05/18/23	PLAN CHECK COMMENT RESPONSES SET
3	06/12/23	GRADING PERMIT
4	07/27/23	BUILDING RESUBMITTAL

Project:

EDUCATOR HOUSING
231 GRANT AVENUE

231 GRANT AVENUE
PALO ALTO, CA 94306

Client:

MERCY HOUSING/
ABODE COMMUNITIES

DETAILS & DIAGRAMS

JOB #: 2293-007

SCALE:

P4.06

GRADING PERMIT | DATE: 06/12/2023

System No. F-A-2054

FA 2054

The firestop devices and nonmetallic penetrants shall be sized as follows in Table 1 below:

Nom Pipe Diameter	Firestop Device	T Rating-Hr
1/2 in. to 2 in. (19 mm to 51 mm)	CP 680-75/2.5"N CP 680-P 2" CP 680-PX 2"	3
3 in. (76 mm)	CP 680-110/4"N CP 680-P 3" CP 680-PX 3" CP 680-P 4"	0 and 3+
4 in. (102 mm)	CP 680-110/4"N CP 680-P 4"	3
6 in. (152 mm)	CP 680-160/6"N CP 680-P 6"	0

+3 hr T Rating applies when CP 680-P(X) 3" and CP 680-P 4" devices are used. 3 hr T Rating also applied when CP 680-110/4"N device is used provided that min 4 in. (102 mm) thickness of nom 4 pcf (64 kg.m3) mineral wool batt insulation tightly packed within annulus between pipe and wall of CP 680-110/4"N device.

++ L Rating applies only to CP 680-P(X) devices and only when the nom diam of pipe equals size of device (2 in. diam pipe in 2" device etc.) L Rating does not apply to CP 680N devices.

+++ T Rating is 0 hr for firestop systems with M Rating (Movement)

4. Firestop Device — Top seal plug for use with CP 680-P(X) 2" device installed in accordance with the manufacturer's instructions. The Top Seal Plug is optional for nom 1-1/2 in. (38 mm) pipes and conduits. Top Seal Plugs are required for all pipes and conduits less than nom 1-1/2 in. (38 mm). W Rating applies only to the IPS Top Seal Plug and nom 2 in. diam penetrants and CPS Top Seal Plug for nom 1/2 to 2 in. (13 to 51 mm) diam penetrants.
HILTI CONSTRUCTION CHEMICALS, DIV OF HILTI INC — IPS and CPS Top Seal Plugs

4A. Firestop Device* - Water Barrier Module — (Optional, Not Shown) - Alternate to Top Seal Plug (Item 4). Applies to nom 2", 3", 4" and 6" water barrier modules used in combination with the CP 680-P(X) 2", CP 680-P(X) 3", CP 680-P 4" and CP 680-P 6" devices, respectively, and supplied by device manufacturer. Module is threaded onto top of device. W Rating applies only when water barrier module is used and nom diam of penetrant equals size of device.
HILTI CONSTRUCTION CHEMICALS, DIV OF HILTI INC — Water Barrier Module

THE M RATING FOR THE FIRESTOP SYSTEM IS DEPENDENT ON THE VARIABLES AS NOTED IN TABLE 2 BELOW.

Movement Direction	Penetrant Item	NOMINAL PENETRANT DIAMETER	Device Size	Movement	Sealant Depth	L Rating	W Rating
Y	3A	2 in.	2 in.	100%	N/A	N/A	N/A
Z	3A	2 in.	2 in.	3.21 in.	N/A	N/A	N/A

** PERCENTAGE MOVEMENT BASED ON THE MINIMUM DISTANCE BETWEEN PENETRANT OD AND DEVICE ID.

* INDICATES SUCH PRODUCTS SHALL BEAR THE UL OR CUL CERTIFICATION MARK FOR JURISDICTIONS EMPLOYING THE UL OR CUL CERTIFICATION (SUCH AS CANADA), RESPECTIVELY.

Hilti Firestop Systems

Reproduced by HILTI, Inc. Courtesy of Underwriters Laboratories, Inc. January 21, 2020

Page: 2 of 2

System No. F-A-2054

FA 2054

CLASSIFIED — Classified by Underwriters Laboratories, Inc. to UL 1479

F Rating — 3 Hr
T Ratings — 0 and 3 Hr (See Item 3)
L Rating (Without Movement) At Ambient — Less Than 1 CFM/sq ft (See Item 3 and Table 1)
L Rating (Without Movement) At 400 F — Less Than 1 CFM/sq ft (See item 3 and Table 1)
W Rating (Without Movement) — Class 1 (See Items 3, 4 and 4A)
M RATING (Movement) — See Table 2

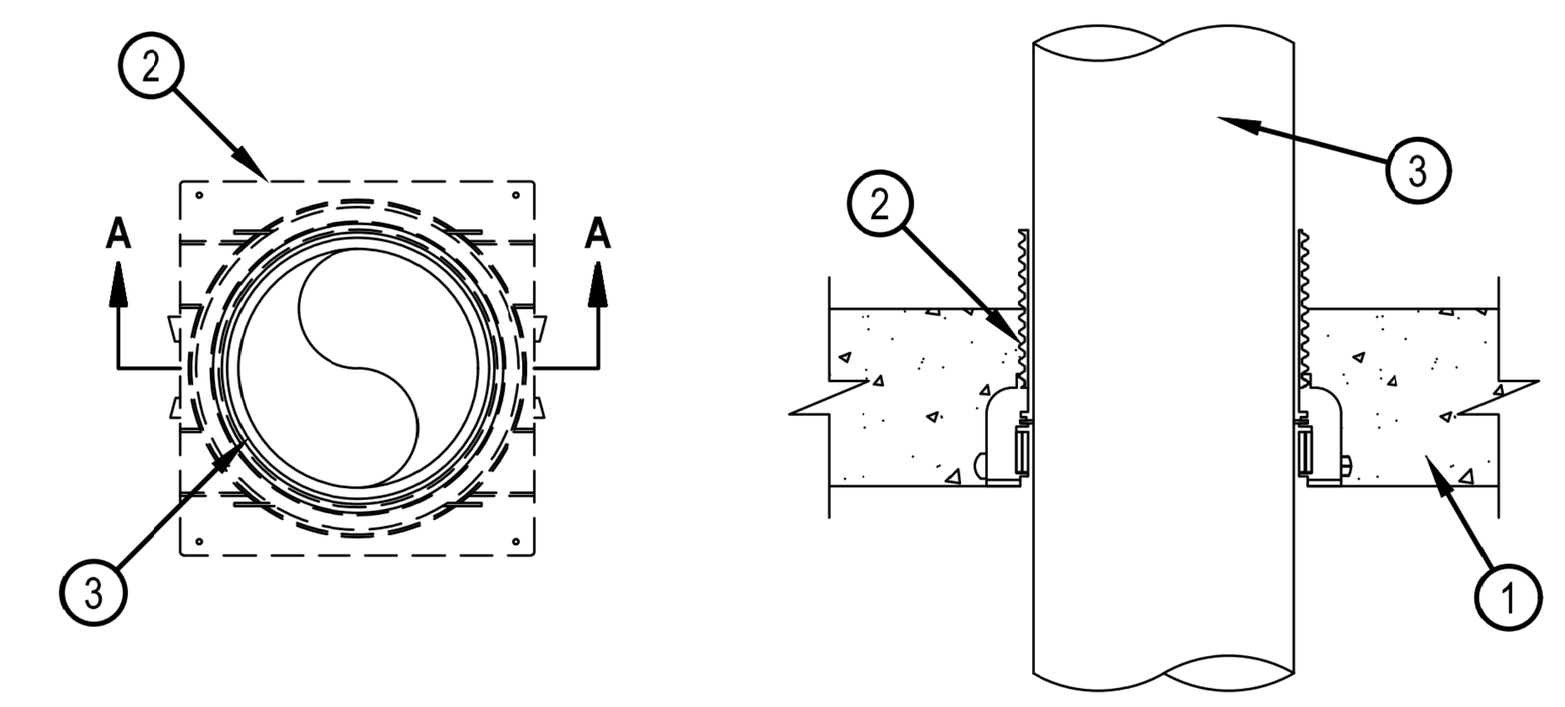

SECTION A-A

1. Floor Assembly — Min 4-1/2 in. (114 mm) thick reinforced lightweight or normal weight (100-150 pcf or 1600-2400 kg/m3) concrete.
1A. Floor Assembly - (Optional - Not Shown) — The fire rated unprotected concrete and steel floor assembly shall be constructed of the materials and in the manner specified in the individual D900 Series designs in the UL Fire Resistance Directory and as summarized below:
   A. Concrete — Min 4-1/2 in (114 mm) thick reinforced lightweight or normal weight (100-150 pcf or 1600-2400 kg/m3) concrete.
   B. Steel Floor and Form Units* — Composite or non-composite max 3 in. (76 mm) deep galv steel fluted units as specified in the individual Floor-Ceiling Design.
2. Firestop Device* — Cast in place firestop device permanently embedded during concrete placement or grouted in concrete assembly in accordance with accompanying installation instructions. The devices may extend a max 2 in. (51 mm) above the top surface of the concrete.
HILTI CONSTRUCTION CHEMICALS, DIV OF HILTI INC — CP 680-75/2.5"N, CP 680-110/4"N, CP 680-160/6"N, CP 680-P 2", CP 680-P 3", CP 680-P 4", CP 680-P 6", CP 680-PX 2", CP 680-PX 3"
3. Through Penetrants — One nonmetallic pipe or conduit to be installed within the firestop system. Pipe or conduit to be rigidly supported on both sides of floor assembly. For W Rating with Water Barrier Module, pipe shall be installed from bottom of device. The following types and sizes of nonmetallic pipes or conduits may be used:
   A. Polyvinyl Chloride (PVC) Pipe — Nom 6 in. (152 mm) diam (or smaller) Schedule 40 solid or cellular core PVC pipe for use in closed (process or supply) or vented (drain, waste or vent) piping systems.
   B. Chlorinated Polyvinyl Chloride (CPVC) Pipe — Pipe-Nom 6 in. (152 mm) diam (or smaller) SDR11 or SDR13.5 CPVC pipe for use in closed (process or supply) piping systems.
   C. Rigid Nonmetallic Conduit+ — Nom 6 in. (152 mm) diam (or smaller) Schedule 40 PVC conduit installed in accordance with the National Electrical Code (NFPA No. 70).
   D. Cross Linked Polyethylene (PEX) Tubing — Nom 4 in. (102 mm) diam (or smaller) SDR 9 PEX tubing for use in closed (process or supply) piping systems.

Hilti Firestop Systems

Reproduced by HILTI, Inc. Courtesy of Underwriters Laboratories, Inc. January 21, 2020

Page: 1 of 2

PEX PIPING PENETRATION 4" AND SMALLER

DETAIL

SCALE: NONE

1 P4.07

System No. W-L-2078

WL 2078

E. Polyvinylidene Fluoride (PVDF) Pipe — Nom 4 in. (102 mm) diam (or smaller) PVDF pipe for use in closed (process or supply) or vented (drain, waste or vent) piping system.
F. Crosslinked Polyethylene (PEX) Tubing — Nom 4 in. (102 mm) diam (or smaller) SDR 9 Uponor AquaPEX or Wirsbo hePEX PEX tube for use in closed (process or supply) piping systems.
When max 6 in. diam pipe is used, T Rating is equal to the hourly fire rating of the wall except that when penetrant type 2F is used, T Rating is 0 hr. When nom 8 in. or 10 in. (203 or 254 mm) diam pipe is used, T Rating is 0 hr. For systems with M Rating, the T Rating is 0 hr.

3. Firestop Device* — Firestop Collar — Firestop collar shall be installed in accordance with the accompanying installation instructions. Collar to be installed and latched around the pipe and secured to both sides of the wall using the anchor hooks provided with the collar. (Minimum two anchor hooks for 1-1/2 and 2 in. (38 and 51 mm) diam pipes, three anchor hooks for 3 and 4 in. (76 and 102 mm) diam pipes, four anchor hooks for 6 in. (152 mm) diam pipes, ten anchor hooks for 8 in. (203 mm) diam pipes and twelve anchor hooks for 10 in. (254 mm) diam pipes. The anchor hooks are to be secured to the surface of wall with 3/16 in. (4.8 mm) diam by 2-1/2 in. (64 mm) long steel toggle bolts along with washers. As an alternate for pipe sizes of nom 4 in. diam or less, min No. 10 by 1-1/2 in. (254 by 38 mm) long drywall or laminate screws with min 3/4 in. (19 mm) steel washers may be used. When the drywall or laminate screw is used, T Rating shall not exceed 1 hr.
HILTI CONSTRUCTION CHEMICALS, DIV OF HILTI INC — CP 643 50/1.5"N, CP 643 63/2"N, CP 643 90/3"N, CP 643 110/4"N, CP 643 160/6"N, CP 644-200/8" US and CP 644-250/10" US Firestop Collars
4. Fill, Void or Cavity Material* — Sealant - (Not Shown) — Min 1/2 in. (13 mm) thickness of sealant applied within the annular space for nom 8 in. and 10 in. (203 and 254 mm) diam pipes, flush with each side of wall. Sealant in annular space is optional for max 6 in. (152 mm) diam pipes except that for penetrant type 2F, sealant is required. A min 1/4 in. (6 mm) thickness of sealant is required within the annular space, flush with each side of wall, to attain the L Ratings for max 6 in. (152 mm) diam pipes. For systems with M Rating, the sealant should not be installed.
HILTI CONSTRUCTION CHEMICALS, DIV OF HILTI INC — FS-ONE MAX Intumescent Sealant

The M Rating for the firestop system is dependent on the variables as noted in the Table 1 below.

Table 1

Movement Direction	Penetrant Item	Nominal Penetrant Diameter	Annular Space	Movement	Sealant Depth	F Rating	L Rating
Y	2A	2 in.	Max 1/4 in.	100%	5/8 in.	1 hr.	N/A
Z	2A	2 in.	Min. 1/4 in.	3.21 in.	5/8 in.	1 hr.	N/A

* Indicates such products shall bear the UL or cUL Certification Mark for jurisdictions employing the UL or cUL Certification (such as Canada), respectively.

Hilti Firestop Systems

Reproduced by HILTI, Inc. Courtesy of Underwriters Laboratories, Inc. January 21, 2020

Page: 2 of 2

System No. W-L-2078

WL 2078

CLASSIFIED — Classified by Underwriters Laboratories, Inc. to UL 1479

F Ratings — 1 and 2 Hr (See Item 1)
T Ratings — 0, 1 and 2 Hr (See Items 2 and 3)
L Rating (Without Movement) At Ambient — 3 CFM/sq ft
L Rating (Without Movement) At 400°F — Less Than 1 CFM/sq ft
M Rating (Movement) — See Table 1

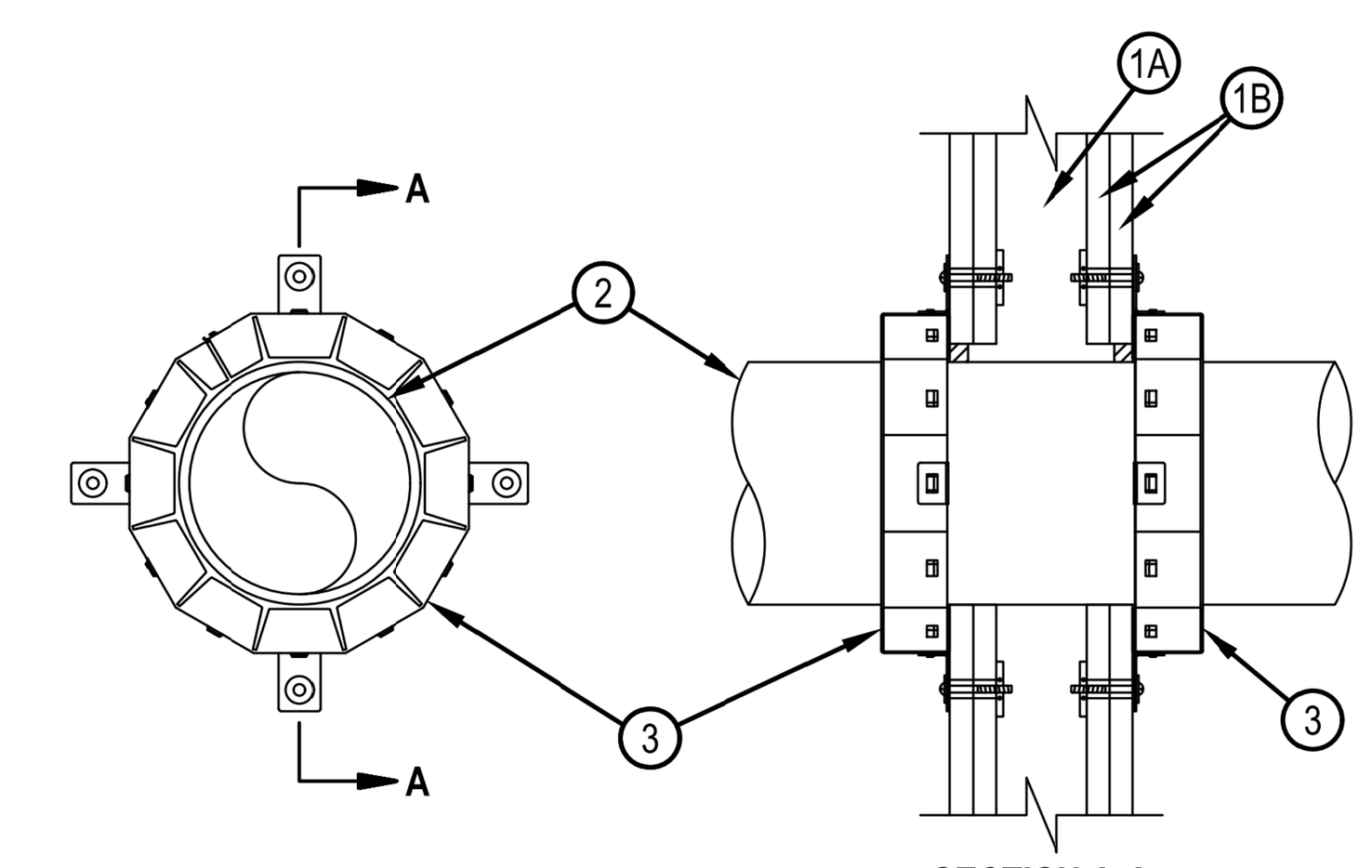

SECTION A-A

1. Wall Assembly — The fire-rated gypsum board/stud wall assembly shall be constructed of the materials and in the manner specified in the individual U300, U400, V400 or W400 Series Wall and Partition Designs in the UL fire Resistance Directory and shall include the construction features noted below:
   A. Studs — Wall framing may consist of either wood studs or steel channel studs. Wood studs to consist of nom 2 by 4 in. (51 by 102 mm) lumber spaced max 16 in. (406 mm) OC. Steel studs to be min 2-1/2 in. (64 mm) wide and spaced max 24 in. (610 mm) OC. For M Rating, steel studs to be min 3-5/8 in. (92 mm) wide.
   B. Gypsum Board* — Nom 5/8 in. (16 mm) thick gypsum board, as specified in the individual Wall and Partition Design. Max diam of opening is 11-1/2 in. (292 mm).
   The hourly F Rating of the firestop system is equal to the hourly fire rating of the wall assembly in which it is installed. The M Rating is applicable only to 1 hr rated walls and the T Rating is 0 hr.
2. Through-Penetrants — One nonmetallic pipe, conduit or tubing to be installed within the firestop system. The annular space between pipe and periphery of opening shall be min 0 in. (point contact) to max 1/2 in. (13 mm). Pipe or conduit to be rigidly supported on both sides of the wall assembly. The following types and sizes of nonmetallic pipes may be used:
   A. Polyvinyl Chloride (PVC) Pipe — Nom 10 in. (254 mm) diam (or smaller) Schedule 40 solid-core or cellular core PVC pipe for use in closed (process or supply) or vented (drain, waste or vent) piping system.
   B. Chlorinated Polyvinyl Chloride (CPVC) Pipe — Nom 10 in. (254 mm) diam (or smaller) SDR13.5 CPVC pipe for use in closed (process or supply) piping systems.
   C. Acrylonitrile Butadiene Styrene (ABS) Pipe — Nom 6 in. (152 mm) diam (or smaller) Schedule 40 solid-core or cellular core ABS pipe for use in closed (process or supply) or vented (drain, waste or vent) piping systems
   D. Flame Retardant Polypropylene (FRPP) Pipe — Nom 6 in. (152 mm) diam (or smaller) Schedule 40 FRPP pipe for use in closed (process or supply) or vented (drain, waste or vent) piping system.

Hilti Firestop Systems

Reproduced by HILTI, Inc. Courtesy of Underwriters Laboratories, Inc. January 21, 2020

Page: 1 of 2

PEX PIPING PENETRATION 4" AND SMALLER

DETAIL

SCALE: NONE

2 P4.07

VAN METER WILLIAMS POLLACK LLP
ARCHITECTURE | URBAN DESIGN ■ SAN FRANCISCO | DENVER | MINNEAPOLIS
333 Bryant Street, Suite 300, San Francisco, CA 94107 T 415.974.5352

☐ **CIVIL ENGINEER**

BKF - SAN JOSE
1730 N. FIRST ST. STE 600
SAN JOSE, CA 95112

☐ **LANDSCAPE ARCHITECT**

PLURAL STUDIO
2742 17TH STREET
SAN FRANCISCO, CA 94110

☐ **STRUCTURAL ENGINEER**

HOHBACH-LEWIN
250 SHERIDAN AVE STE 100
PALO ALTO, CA 94306

☐ **MEP ENGINEER**

EMERALD CITY ENGINEERS
21705 HIGHWAY 99
LYNWOOD, WA 98036

☐ **SUSTAINABILITY/ENERGY**

REDWOOD ENERGY
1887 Q STREET
ARCATA, CA 95521

EMERALD CITY ENGINEERS, INC
21705 Highway 99
Lynnwood, WA 98036
TEL: 425-741-1200

REGISTERED PROFESSIONAL ENGINEER MASSAMAGHAN KON... No. ...8848 EXP. 03-31-24 MECHANICAL STATE OF CALIFORNIA

07/27/23

ID	DATE	NAME
1	11/11/22	PERMIT SET - CONV
A	12/16/22	BID SET
B	03/20/23	BID ADDENDUM SET
2	03/20/23	PLAN CHECK COMMENT RESPONSES SET
3	05/18/23	PLAN CHECK COMMENT RESPONSES SET
3	06/12/23	GRADING PERMIT
4	07/27/23	BUILDING RESUBMITTAL

Project:

EDUCATOR HOUSING 231 GRANT AVENUE

231 GRANT AVENUE
PALO ALTO, CA 94306

Client:

mercy HOUSING

abode communities

MERCY HOUSING/
ABODE COMMUNITIES

DETAILS & DIAGRAMS

COUNTY OF SANTA CLARA
BUILDING INSPECTION OFFICE
PLANS APPROVED FOR PERMIT
RECORD NO.: DEV22-1242
BY: Warren Krause Date: 7/28/2023
HARD COPY OF THESE STAMPED PLANS MUST BE ON THE SITE FOR INSPECTIONS

JOB #: 2293-007

SCALE:

P4.07

GRADING PERMIT | DATE: 06/12/2023

COPYRIGHT 2023, EMERALD CITY ENGINEERS, INC.
KSTEPHENS J:\2293-007 231 GRANT, PALO ALTO, CA\DWG\P407 DETAILS & DIAGRAMS.DWG 03-16-2023 10:00

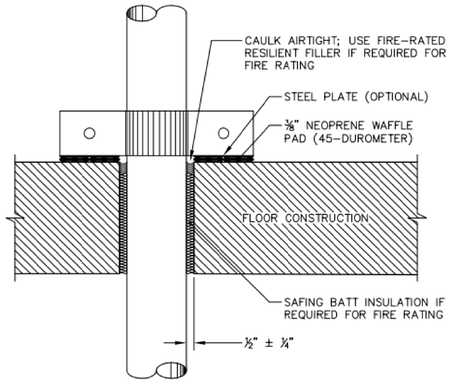

NOTE: IF PIPE IS SUSPENDED FROM-OR DIRECTLY ATTACHED TO-STRUCTURE OR OTHER BUILDING ELEMENTS, USE ⅜" THICK FELT, OR 40-DUROMETER NEOPRENE AS SLEEVE BETWEEN PIPE AND PIPE HANGER

SALTER © 2021
FOR ACOUSTICAL DESIGN INFORMATION ONLY

PIPE RISER ISOLATION | FIGURE 14
538 3.1.1, 8.3 | EBM 03.14.17

Salter San Francisco San Jose Los Angeles Honolulu Seattle www.salter-inc.com

ACOUSTICAL PIPE RISERS

DETAIL 2 P4.08

SCALE: NONE

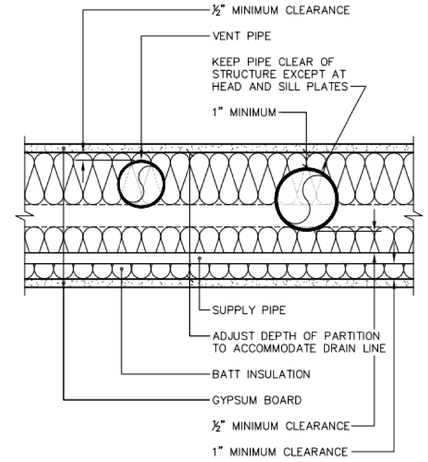

SALTER © 2021
FOR ACOUSTICAL DESIGN INFORMATION ONLY

PIPING WALL WIDTH AND CLEARANCES | FIGURE 5
1266N 4.4 | EBM 05.25.16

Salter San Francisco San Jose Los Angeles Honolulu Seattle www.salter-inc.com

ACOUSTICAL PIPE CLEARANCES

DETAIL 1 P4.08

SCALE: NONE

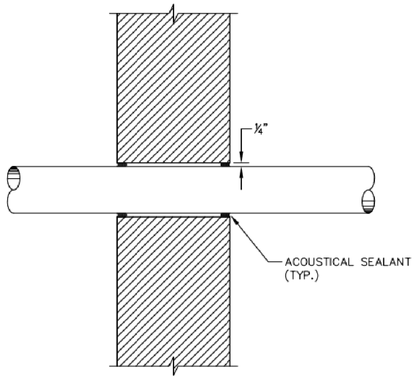

(PIPE OR CONDUIT LESS THAN 3" DIAMETER)

NOTE: APPLICABLE AT ALL SOUND-RATED CONSTRUCTION INCLUDING INTERIOR INSULATED ASSEMBLIES

SALTER © 2021
FOR ACOUSTICAL DESIGN INFORMATION ONLY

TYPICAL PIPE OR CONDUIT PENETRATION THROUGH SOUND-RATED CONSTRUCTION | FIGURE 16
182 3.1.1, 3.1.3 | EBM 03.14.17

Salter San Francisco San Jose Los Angeles Honolulu Seattle www.salter-inc.com

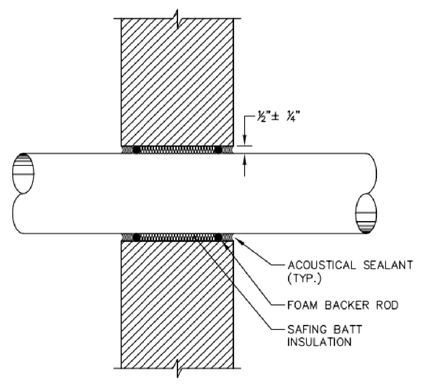

(DUCT, PIPE, OR CONDUIT 3" DIAMETER OR GREATER)

NOTE: APPLICABLE AT ALL SOUND-RATED CONSTRUCTION INCLUDING INTERIOR INSULATED ASSEMBLIES

SALTER © 2021
FOR ACOUSTICAL DESIGN INFORMATION ONLY

TYPICAL DUCT, PIPE, OR CONDUIT PENETRATION THROUGH SOUND-RATED CONSTRUCTION | FIGURE 15
181 3.1.1, 3.1.2, 3.1.3 | EBM 03.14.17

Salter San Francisco San Jose Los Angeles Honolulu Seattle www.salter-inc.com

ACOUSTICAL PIPE PENETRATIONS

DETAIL 3 P4.08

SCALE: NONE

COUNTY OF SANTA CLARA
BUILDING INSPECTION OFFICE
PLANS APPROVED FOR PERMIT
RECORD NO.: DEV22-1242
BY: Warren Krause Date: 7/28/2023
HARD COPY OF THESE STAMPED PLANS MUST BE ON THE SITE FOR INSPECTIONS

COPYRIGHT 2023, EMERALD CITY ENGINEERS, INC.
K:\STEPHENS A\2293-007 231 GRANT, PALO ALTO, CA\DWG\P4OB DETAILS & DIAGRAMS.DWG 03-16-2023 09:59

VAN METER WILLIAMS POLLACK LLP
ARCHITECTURE | URBAN DESIGN ■ SAN FRANCISCO | DENVER | MINNEAPOLIS
333 Bryant Street, Suite 300, San Francisco, CA 94107 T 415.974.5252

☐ CIVIL ENGINEER
BKF - SAN JOSE
1730 N. FIRST ST. STE 600
SAN JOSE, CA 95112

☐ LANDSCAPE ARCHITECT
PLURAL STUDIO
2742 17TH STREET
SAN FRANCISCO, CA 94110

☐ STRUCTURAL ENGINEER
HOHBACH-LEWIN
250 SHERIDAN AVE STE 100
PALO ALTO, CA 94306

☐ MEP ENGINEER
EMERALD CITY ENGINEERS
21705 HIGHWAY 99
LYNWOOD, WA 98036

☐ SUSTAINABILITY/ENERGY
REDWOOD ENERGY
1887 Q STREET
ARCATA, CA 95521

EMERALD CITY ENGINEERS, INC
21705 Highway 99
Lynnwood, WA 98036
TEL: 425-741-1200

REGISTERED PROFESSIONAL ENGINEER
MASSAMAGHAN KONGKEO
No. 32806
EXP: 03-31-24
MECHANICAL
STATE OF CALIFORNIA

07/27/23

ID	DATE	NAME
1	11/11/22	PERMIT SET - CONV
A	12/16/22	BID SET
B	03/20/23	BID ADDENDUM SET
2	03/20/23	PLAN CHECK COMMENT RESPONSES SET
3	05/18/23	PLAN CHECK COMMENT RESPONSES SET
3	06/12/23	GRADING PERMIT
4	07/27/23	BUILDING RESUBMITTAL

Project:

EDUCATOR HOUSING
231 GRANT AVENUE

231 GRANT AVENUE
PALO ALTO, CA 94306

Client:

MERCY HOUSING/
ABODE COMMUNITIES

DETAILS & DIAGRAMS

JOB #: 2293-007

SCALE:

P4.08

GRADING PERMIT | DATE: 06/12/2023

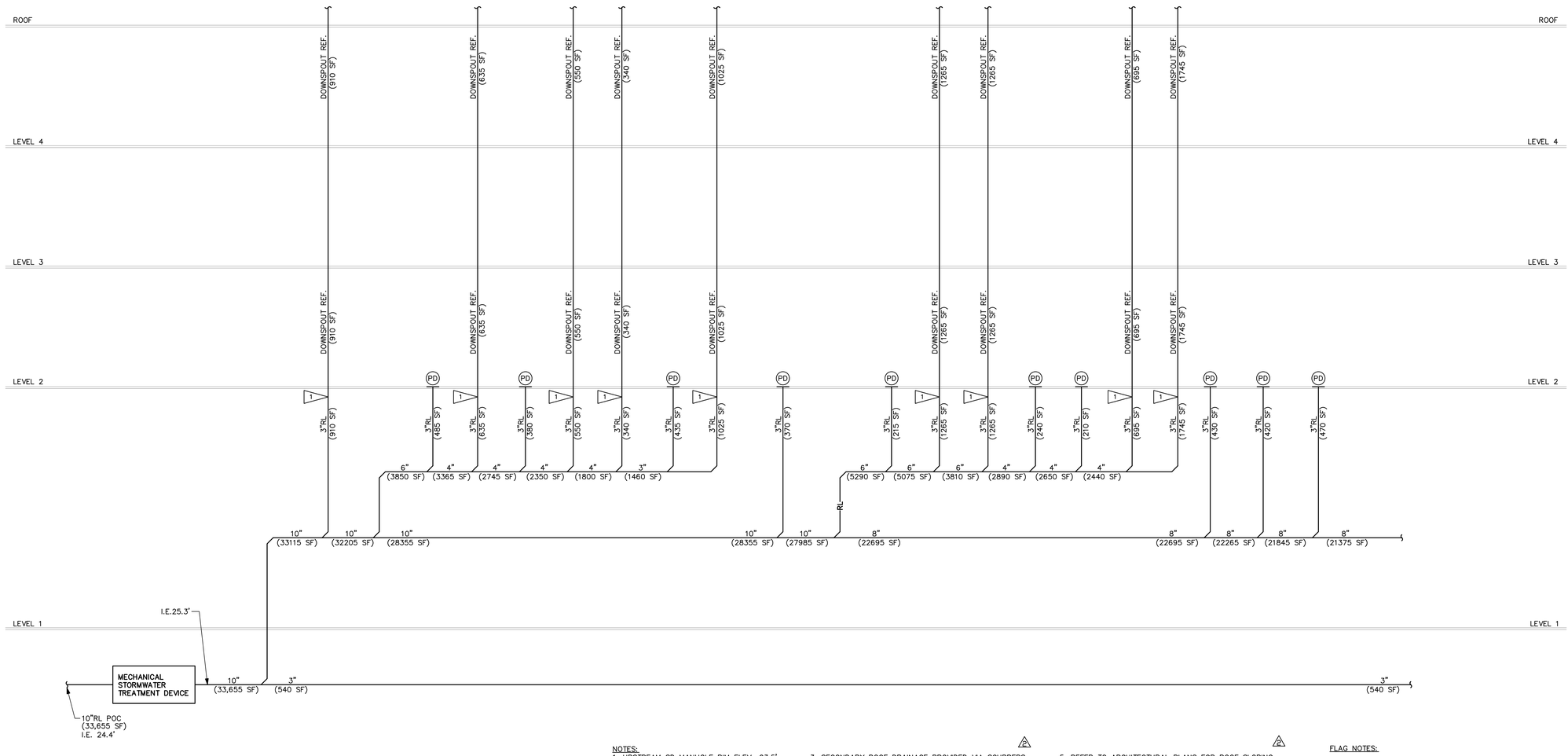

NOTES:
1. UPSTREAM SD MANHOLE RIM ELEV: 23.5'
2. PD= PLANTER DRAIN
   FD= FLOOR DRAIN
   TD= AREA DRAIN
   RD= ROOF DRAIN
   OD= ROOF OVERFLOW DRAIN
   OD= ROOF OVERFLOW DRAIN
   BRD=BIORETENTION DRAIN
3. SECONDARY ROOF DRAINAGE PROVIDED VIA SCUPPERS IN ACCORDANCE WITH 2019 CPC 1101.12.2.1
4. RAIN LEADERS AND CONDUCTORS CONNECTED TO A BUILDING STORM DRAIN SHALL HAVE A CLEANOUT INSTALLED AT THE BASE OF THE LEADER IT CONNECTS TO THE HORIZONTAL DRAIN. 2019 CPC 1101.13.
5. REFER TO ARCHITECTURAL PLANS FOR ROOF SLOPING, DOWNSPOUT AND ROOF SCUPPER DETAILS.

FLAG NOTES:
1. TRANSITION TO RAIN LEADER
2. STORMWATER DAYLIGHTED ABOVE FLOW THROUGH PLANTER

STORMWATER RISER DIAGRAM

SCALE: NONE

1 / P4.09

COUNTY OF SANTA CLARA
BUILDING INSPECTION OFFICE
PLANS APPROVED FOR PERMIT
RECORD NO.: DEV22-1242
BY: Warren Krause Date: 7/28/2023
HARD COPY OF THESE STAMPED PLANS MUST BE ON THE SITE FOR INSPECTIONS

COPYRIGHT 2023, EMERALD CITY ENGINEERS, INC.
K:\STEPHENS A\2293-007 231 GRANT, PALO ALTO, CA\DWG\P409 DETAILS & DIAGRAMS.DWG 03-16-2023 09:59

VAN METER WILLIAMS POLLACK LLP
ARCHITECTURE | URBAN DESIGN ■ SAN FRANCISCO | DENVER | MINNEAPOLIS
333 Bryant Street, Suite 300, San Francisco, CA 94107 T 415.974.5252

☐ CIVIL ENGINEER
BKF - SAN JOSE
1730 N. FIRST ST. STE 600
SAN JOSE, CA 95112

☐ LANDSCAPE ARCHITECT
PLURAL STUDIO
2742 17TH STREET
SAN FRANCISCO, CA 94110

☐ STRUCTURAL ENGINEER
HOHBACH-LEWIN
250 SHERIDAN AVE STE 100
PALO ALTO, CA 94306

☐ MEP ENGINEER
EMERALD CITY ENGINEERS
21705 HIGHWAY 99
LYNWOOD, WA 98036

☐ SUSTAINABILITY/ENERGY
REDWOOD ENERGY
1887 Q STREET
ARCATA, CA 95521

EMERALD CITY ENGINEERS, INC
21705 Highway 99
Lynnwood, WA 98036
TEL: 425-741-1200

REGISTERED PROFESSIONAL ENGINEER
MASS MAGHAN KINNEALEY
No. 56868
EXP: 03-31-24
MECHANICAL
STATE OF CALIFORNIA

07/27/23

ID	DATE	NAME
1	11/11/22	PERMIT SET - CONV
A	12/16/22	BID SET
B	03/20/23	BID ADDENDUM SET
2	03/20/23	PLAN CHECK COMMENT RESPONSES SET
3	05/18/23	PLAN CHECK COMMENT RESPONSES SET
3	06/12/23	GRADING PERMIT
4	07/27/23	BUILDING RESUBMITTAL

Project:

EDUCATOR HOUSING
231 GRANT AVENUE

231 GRANT AVENUE
PALO ALTO, CA 94306

Client:

MERCY HOUSING/
ABODE COMMUNITIES

STORMWATER
RISER DIAGRAM

JOB #: 2293-007

SCALE:

P4.09

GRADING PERMIT | DATE: 06/12/2023

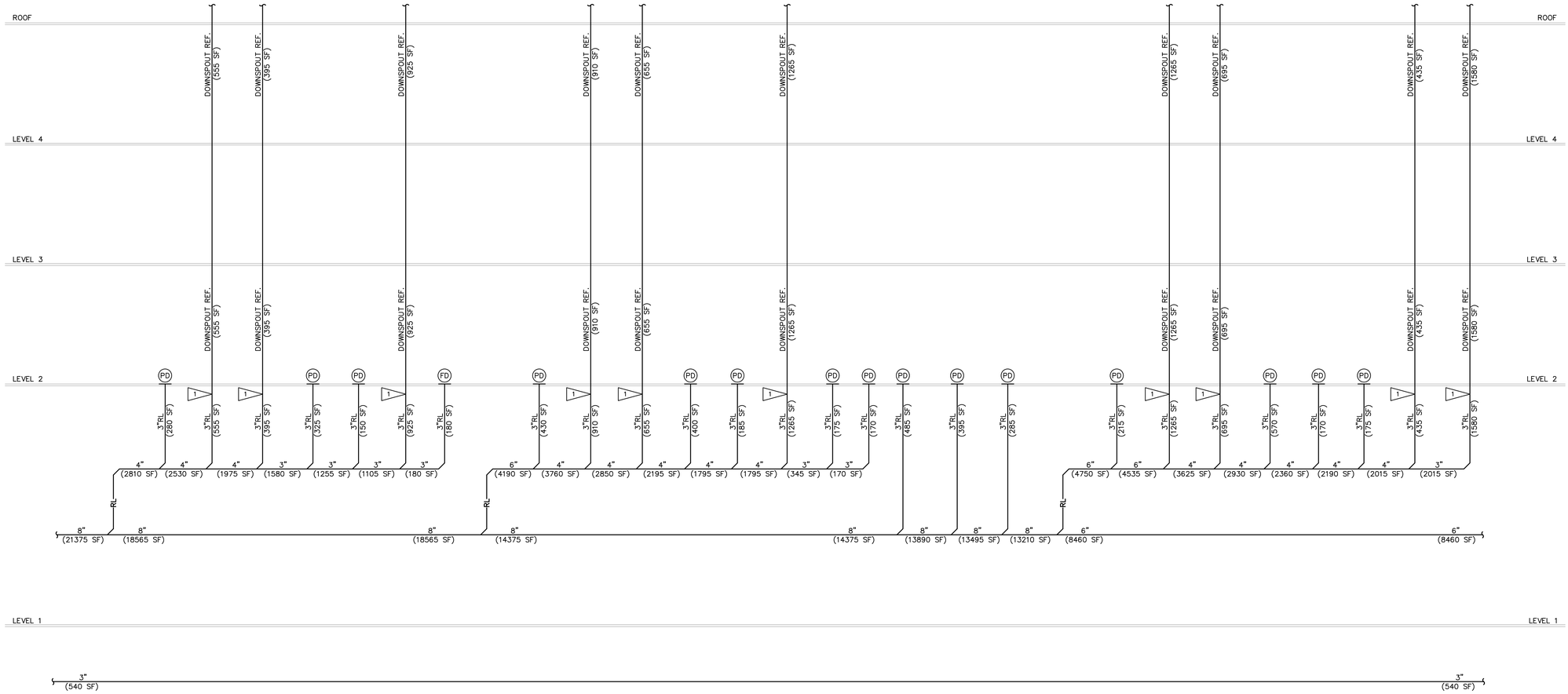

NOTES:
1. UPSTREAM SD MANHOLE RIM ELEV: 23.5'
2. PD= PLANTER DRAIN
   FD= FLOOR DRAIN
   TD= AREA DRAIN
   RD= ROOF DRAIN
   OD= ROOF OVERFLOW DRAIN
   OD= ROOF OVERFLOW DRAIN
   BRD=BIORETENTION DRAIN
3. SECONDARY ROOF DRAINAGE PROVIDED VIA SCUPPERS
4. RAIN LEADERS AND CONDUCTORS CONNECTED TO A BUILDING STORM DRAIN SHALL HAVE A CLEANOUT INSTALLED AT THE BASE OF THE LEADER IT CONNECTS TO THE HORIZONTAL DRAIN. 2019 CPC 1101.13.
5. REFER TO ARCHITECTURAL PLANS FOR ROOF SLOPING, DOWNSPOUT AND ROOF SCUPPER DETAILS.

FLAG NOTES:
1. TRANSITION TO RAIN LEADER
2. STORMWATER DAYLIGHTED ABOVE FLOW THROUGH PLANTER

STORMWATER RISER DIAGRAM

SCALE: NONE

1 / P4.10

COUNTY OF SANTA CLARA
BUILDING INSPECTION OFFICE
PLANS APPROVED FOR PERMIT
RECORD NO.: DEV22-1242
BY: Warren Krause Date: 7/28/2023
HARD COPY OF THESE STAMPED PLANS MUST BE ON THE SITE FOR INSPECTIONS

COPYRIGHT 2023, EMERALD CITY ENGINEERS, INC.
K:\STEPHENS A\2293-007 231 GRANT, PALO ALTO, CA\DWG\P410 DETAILS & DIAGRAMS.DWG 03-16-2023 09:58

VAN METER WILLIAMS POLLACK LLP
ARCHITECTURE | URBAN DESIGN ■ SAN FRANCISCO | DENVER | MINNEAPOLIS
333 Bryant Street, Suite 300, San Francisco, CA 94107 T 415.974.5252

☐ CIVIL ENGINEER
BKF - SAN JOSE
1730 N. FIRST ST. STE 600
SAN JOSE, CA 95112

☐ LANDSCAPE ARCHITECT
PLURAL STUDIO
2742 17TH STREET
SAN FRANCISCO, CA 94110

☐ STRUCTURAL ENGINEER
HOHBACH-LEWIN
250 SHERIDAN AVE STE 100
PALO ALTO, CA 94306

☐ MEP ENGINEER
EMERALD CITY ENGINEERS
21705 HIGHWAY 99
LYNWOOD, WA 98036

☐ SUSTAINABILITY/ENERGY
REDWOOD ENERGY
1887 Q STREET
ARCATA, CA 95521

EMERALD CITY ENGINEERS, INC
21705 Highway 99
Lynnwood, WA 98036
TEL: 425-741-1200

REGISTERED PROFESSIONAL ENGINEER
JAMES MAGHAN KNUTSEN
No. 25866
EXP. 03-31-24
MECHANICAL
STATE OF CALIFORNIA
07/27/23

ID	DATE	NAME
1	11/11/22	PERMIT SET - CONV
A	12/16/22	BID SET
B	03/20/23	BID ADDENDUM SET
2	03/20/23	PLAN CHECK COMMENT RESPONSES SET
3	05/18/23	PLAN CHECK COMMENT RESPONSES SET
3	06/12/23	GRADING PERMIT
4	07/27/23	BUILDING RESUBMITTAL

Project:

EDUCATOR HOUSING
231 GRANT AVENUE

231 GRANT AVENUE
PALO ALTO, CA 94306

Client:
mercy HOUSING
abode communities
MERCY HOUSING/
ABODE COMMUNITIES

STORMWATER
RISER DIAGRAM

JOB #: 2293-007

SCALE:

P4.10

GRADING PERMIT | DATE: 06/12/2023

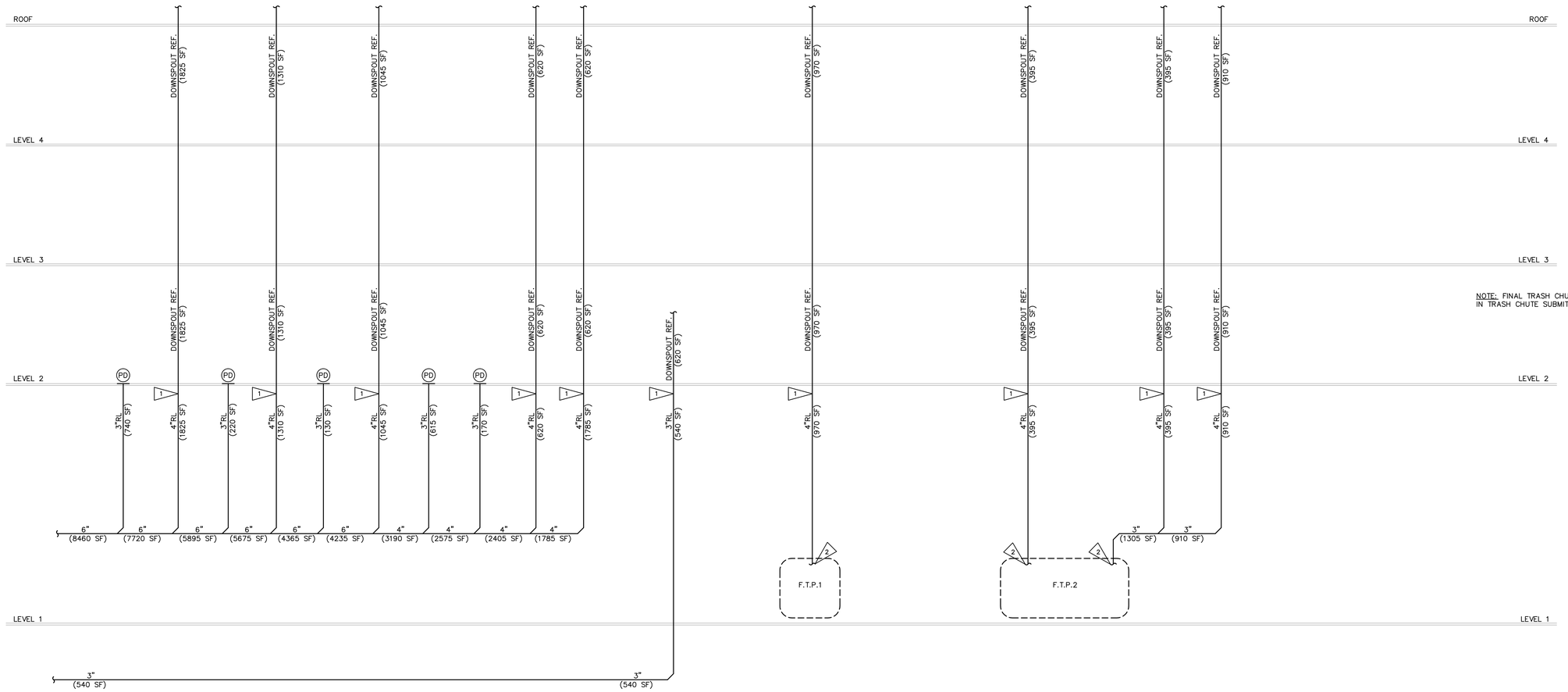

NOTE: FINAL TRASH CHUTE DESIG IN TRASH CHUTE SUBMITTAL.

NOTES:
1. UPSTREAM SD MANHOLE RIM ELEV: 23.5'
2. PD= PLANTER DRAIN
   FD= FLOOR DRAIN
   TD= AREA DRAIN
   RD= ROOF DRAIN
   OD= ROOF OVERFLOW DRAIN
   OD= ROOF OVERFLOW DRAIN
   BRD=BIORETENTION DRAIN
3. SECONDARY ROOF DRAINAGE PROVIDED VIA SCUPPERS
4. RAIN LEADERS AND CONDUCTORS CONNECTED TO A BUILDING STORM DRAIN SHALL HAVE A CLEANOUT INSTALLED AT THE BASE OF THE LEADER IT CONNECTS TO THE HORIZONTAL DRAIN. 2019 CPC 1101.13.
5. REFER TO ARCHITECTURAL PLANS FOR ROOF SLOPING, DOWNSPOUT AND ROOF SCUPPER DETAILS.

FLAG NOTES:
1. TRANSITION TO RAIN LEADER
2. STORMWATER DAYLIGHTED ABOVE FLOW THROUGH PLANTER

STORMWATER RISER DIAGRAM

SCALE: NONE

1 / P4.11

COUNTY OF SANTA CLARA
BUILDING INSPECTION OFFICE
PLANS APPROVED FOR PERMIT
RECORD NO.: DEV22-1242
BY: Warren Krause Date: 7/28/2023
HARD COPY OF THESE STAMPED PLANS MUST BE ON THE SITE FOR INSPECTIONS

COPYRIGHT 2023, EMERALD CITY ENGINEERS, INC.
K:\STEPHENS a\2293-007 231 GRANT, PALO ALTO, CA\DWG\P411 DETAILS & DIAGRAMS.DWG 03-16-2023 09:59

VAN METER WILLIAMS POLLACK LLP
ARCHITECTURE | URBAN DESIGN ■ SAN FRANCISCO | DENVER | MINNEAPOLIS
333 Bryant Street, Suite 300, San Francisco, CA 94107 T 415.974.5252

CIVIL ENGINEER
BKF - SAN JOSE
1730 N. FIRST ST. STE 600
SAN JOSE, CA 95112

LANDSCAPE ARCHITECT
PLURAL STUDIO
2742 17TH STREET
SAN FRANCISCO, CA 94110

STRUCTURAL ENGINEER
HOHBACH-LEWIN
250 SHERIDAN AVE STE 100
PALO ALTO, CA 94306

MEP ENGINEER
EMERALD CITY ENGINEERS
21705 HIGHWAY 99
LYNWOOD, WA 98036

SUSTAINABILITY/ENERGY
REDWOOD ENERGY
1887 Q STREET
ARCATA, CA 95521

EMERALD CITY ENGINEERS, INC
21705 Highway 99
Lynnwood, WA 98036
TEL: 425-741-1200

REGISTERED PROFESSIONAL ENGINEER
MASS/MAGHAN KINNEALEY
No. 56866
EXP: 03-31-24
MECHANICAL
STATE OF CALIFORNIA

07/27/23

ID	DATE	NAME
1	11/11/22	PERMIT SET - CONV
A	12/16/22	BID SET
B	03/20/23	BID ADDENDUM SET
2	03/20/23	PLAN CHECK COMMENT RESPONSES SET
3	05/18/23	PLAN CHECK COMMENT RESPONSES SET
3	06/12/23	GRADING PERMIT
4	07/27/23	BUILDING RESUBMITTAL

Project:

EDUCATOR HOUSING
231 GRANT AVENUE

231 GRANT AVENUE
PALO ALTO, CA 94306

Client:
mercy HOUSING
abode communities
MERCY HOUSING/
ABODE COMMUNITIES

STORMWATER
RISER DIAGRAM

JOB #: 2293-007

SCALE:

P4.11

GRADING PERMIT | DATE: 06/12/2023

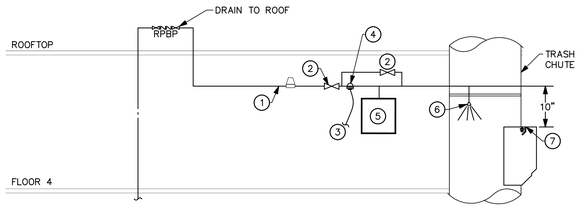

NOTES:

1. ¾" DOMESTIC HOT WATER INLET
2. ¾—TURN GATE VALVE (SHUTOFF & BY—PASS)
3. ½" CONDUIT TO SOLENOID VALVE (ABOVE HIGHEST INTAKE) FROM TRASH ROOM.
4. 6 VDC SOLENOID VALVE.
5. D & S UNIT: 1— GALLON CONTAINER, MOUNTING BRACKET & PROPORTIONING VALVE AT REMOTE LOCATION.
6. FLUSHING HEAD AT HIGHEST INTAKE.
7. FIRE SPRINKLER HEAD AT HIGHEST INTAKE.
8. FINAL DESIGN OF TRASH CHUTE WASHDOWN BY TRASH CHUTE CONSULTANT AND TRASH CHUTE FINAL SUBMITTAL

TRASH CHUTE WASHDOWN

DETAIL

SCALE: NONE

2 / P4.12

Rheem

The new degree of comfort*

Water | Residential Electric
Professional *Prestige* ProTerra Hybrid Water Heaters

Professional *Prestige*® ProTerra™ Hybrid Electric with LeakGuard™ is the most efficient water heater available

Efficiency
- Up to 4.0 UEF reduces operating cost
- ENERGY STAR® rated
- Title 24 Compliant (JA13 Ready)

Performance
- Delivers hot water faster than most standard electric water heaters
- Ambient operating range: 37-145° F is widest in class, offering more days of HP operation annually designed to meet Northern Climate Spec (Tier 4)

Easy Installation
- Easy access side connections
- Quick access to electrical junction box
- Easily replaces a standard electric water heater

Integration
- LED Screen with built-in water sensor alert with audible alarm[1]
- Integrated EcoNet® WiFi-connected[2] technology and free mobile app gives users control over water heater, allowing for customizable temperature, vacation settings, energy savings and system monitoring at home or away
- Demand Response Ready with built-in EcoPort (CTA-2045 Port)
- LeakGuard™ and LeakSense™ integrated leak detection and prevention system with factory installed auto water shut-off valve limits leaks to no more than 20 ounces of water[1, 3]

Operation Modes
- Energy Saver
- Heat Pump
- High Demand
- Electric
- Vacation/Away: 2-28 days (or placed on hold indefinitely)

Plus...
- Premium grade anode rod with resistor extends the life of the tank
- 3/4" NPT water inlet and outlet; 3/4" condensate drain connections
- Incoloy stainless steel resistor elements
- Dry-fire protection
- Easy access, top mounted washable air filter
- 2" Non-CFC foam insulation
- Enhanced flow brass drain valve
- Temperature and pressure relief valve installed
- Design certified to NSF/ANSI 372 (Lead Content)

Warranty
- 10-Year limited tank and parts warranty

See Residential Warranty Certificate for complete information

Units meet or exceed ANSI requirements and have been tested according to D.O.E. procedures. Units meet or exceed the energy efficiency requirements of NAECA. ASHRAE standard 90. ICC Code and all state energy efficiency performance criteria.



Professional *Prestige* ProTerra Hybrid
40, 50, 65 and 80-Gallon Capacities
208-240 Volt / 1 PH Electric

c UL us | LEED Points = 3

[1]Available with select models. [2]WiFi broadband internet connection required. [3]Source: Rheem Leak-Sensing Data; testing under a vacuum lock using 50-gallon tank, no expansion tank, average tank pressure of 40 psi, assuming no additional faucets are opened.

See specifications chart on next page.

INTEGRATED HOME COMFORT

04/22 WP FORM NO. HP-375-SG Rev. 1

Professional *Prestige*® ProTerra Hybrid Specifications

DESCRIPTION					ENERGY INFO		FEATURES							SHIPPING WEIGHTS	
NOMINAL GALLON CAPACITY	RATED GALLON CAPACITY	MODEL NUMBER	MODEL WARRANT	ELECTRIC BREAKER SIZE	UNIFORM ENERGY FACTOR (UEF)	EST. ENERGY ENERGY COST	COMPRESSOR BTUH	LRT TEMP. FOR FULL S.P.H.	RECOVERY IN G.P.H. 80° F RISE	ELEMENT WATTAGE	TOTAL UNIT WATTAGE	MAX AMPS	UNIT WT. (LBS)	APPROX. SHIP WT. (LBS.)
ProTerra with LeakGuard															
40	36	PROPH40 T2 RH375-SO	700646	30	3.75	$104	4,200	60	26	4,500	5,000	21	157	174
50	45	PROPH50 T2 RH375-SO	700643	30	3.75	$104	4,200	67	27	4,500	5,000	21	178	218
65	59	PROPH65 T2 RH375-SO	700644	30	3.85	$155	4,200	75	27	4,500	5,000	21	225	262
80	72	PROPH80 T2 RH375-SO	700645	30	4.00	$149	4,200	87	27	4,500	5,000	21	244	281

Estimated energy cost based on a national average electricity cost of $0.12 /kWh. Uniform Energy Factor and rated gallon capacity based on Department of Energy (DOE) requirements. All units have integrated WiFi control board.

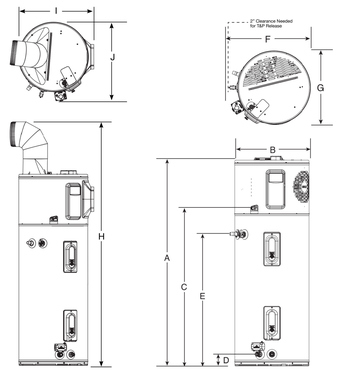

DESCRIPTION		DIMENSIONS (SHOWN IN INCHES)									
NOMINAL GALLON CAPACITY	MODEL NUMBER	A	B	C	D	E	F	G	H	I	J
40	PROPH40	62-5/16	20-1/4	47	3-5/8	39-5/8	25-3/8	20-1/2	78-7/8	22-3/8	23-1/4
50	PROPH50	61-3/4	22-1/4	47	3-5/8	39-5/8	27-3/8	22-1/2	78-5/8	24-3/8	25-9/16
65	PROPH65	64-3/16	24-1/4	49	3-7/8	42-3/8	29-1/2	24-5/8	81-1/8	26-1/2	28-1/16
80	PROPH80	74-3/16	24-1/4	59	3-7/8	42-3/8	29-1/2	24-5/8	91	26-1/2	27-3/8

2

WATER HEATER CLOSET INSTALLATION

DETAIL

SCALE: NONE

1 / P4.12

VAN METER WILLIAMS POLLACK LLP
ARCHITECTURE | URBAN DESIGN ■ SAN FRANCISCO | DENVER | MINNEAPOLIS
333 Bryant Street, Suite 300, San Francisco, CA 94107 T 415.974.5282

CIVIL ENGINEER
BKF - SAN JOSE
1730 N. FIRST ST. STE 600
SAN JOSE, CA 95112

LANDSCAPE ARCHITECT
PLURAL STUDIO
2742 17TH STREET
SAN FRANCISCO, CA 94110

STRUCTURAL ENGINEER
HOHBACH-LEWIN
250 SHERIDAN AVE STE 100
PALO ALTO, CA 94306

MEP ENGINEER
EMERALD CITY ENGINEERS
21705 HIGHWAY 99
LYNWOOD, WA 98036

SUSTAINABILITY/ENERGY
REDWOOD ENERGY
1887 Q STREET
ARCATA, CA 95521

EMERALD CITY ENGINEERS, INC
21705 Highway 99
Lynnwood, WA 98036
TEL: 425-741-1200

REGISTERED PROFESSIONAL ENGINEER — THOMAS MASSAMAGHAN KOHLER — No. M-29815 — EXP: 03-31-24 — MECHANICAL — STATE OF CALIFORNIA

07/27/23

ID	DATE	NAME
1	11/11/22	PERMIT SET - CONV
A	12/16/22	BID SET
B	03/20/23	BID ADDENDUM SET
2	03/20/23	PLAN CHECK COMMENT RESPONSES SET
3	05/18/23	PLAN CHECK COMMENT RESPONSES SET
3	06/12/23	GRADING PERMIT
4	07/27/23	BUILDING RESUBMITTAL

Project:

EDUCATOR HOUSING
231 GRANT AVENUE

231 GRANT AVENUE
PALO ALTO, CA 94306

Client: mercy HOUSING / abode communities

MERCY HOUSING/
ABODE COMMUNITIES

DETAILS & DIAGRAMS

COUNTY OF SANTA CLARA
BUILDING INSPECTION OFFICE
PLANS APPROVED FOR PERMIT
RECORD NO.: DEV22-1242
BY: Warren Krause Date: 7/28/2023
HARD COPY OF THESE STAMPED PLANS MUST BE ON THE SITE FOR INSPECTIONS.

JOB #: 2293-007

SCALE:

P4.12

GRADING PERMIT | DATE: 06/12/2023

COPYRIGHT 2023, EMERALD CITY ENGINEERS, INC.
K:\STEPHENS J\2293-007 231 GRANT, PALO ALTO, CA\DWG\P412 DETAILS & DIAGRAMS.DWG 03-16-2023 09:59

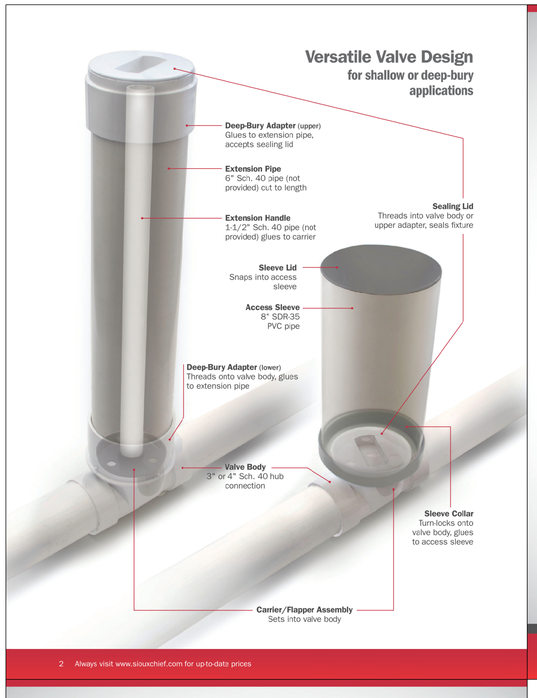





Buying Information

ITEM NO.	DESCRIPTION	PKG	MIN. QTY.	CASE QTY.
PROCHECK - SHALLOW OR DEEP BACKWATER VALVES				
869-S3A	3" ABS Backwater Valve	B*	4	4
869-S3APK	3" ABS Backwater Valve	C*	2	2
869-S3AS	3" ABS Backwater Valve with 16" Shallow Access Sleeve Kit	B*	1	1
869-S3P	3" PVC Backwater Valve	B*	4	4
869-S3PPK	3" PVC Backwater Valve	C*	2	2
869-S3PS	3" PVC Backwater Valve with 16" Shallow Access Sleeve Kit	B*	1	1
869-S4A	4" ABS Backwater Valve	B*	4	4
869-S4APK	4" ABS Backwater Valve	C*	2	2
869-S4AS	4" ABS Backwater Valve with 16" Shallow Access Sleeve Kit	B*	1	1
869-S4P	4" PVC Backwater Valve	B*	4	4
869-S4PPK	4" PVC Backwater Valve	C*	2	2
869-S4PS	4" PVC Backwater Valve with 16" Shallow Access Sleeve Kit	B*	1	1
869-SF3	Flapper & Carrier for 3" Backwater Valve	B*	10	10
869-SF4	Flapper & Carrier for 4" Backwater Valve	B*	10	10
869-SSL	Turn-Lock Collar & Lid for 16" Shallow Access Sleeve	B*	4	4
869-SSK	Shallow Access Sleeve Kit – Collar/Sleeve/Lid	B*	1	1
869-SVLB	Threaded Lid For Backwater Valve, Black with O-Ring	B*	10	10
869-SVLW	Threaded Lid For Backwater Valve, White with O-Ring	B*	10	10
869-S4ADB	Deep-Bury Adapter Kit – ABS (for use with 3" or 4" backwater valves purchased separately)	B*	1	1
869-S4PDB	Deep-Bury Adapter Kit – PVC (for use with 3" or 4" backwater valves purchased separately)	B*	1	1
STANDARD - SHALLOW-ONLY BACKWATER VALVES				
869-2A	2" ABS Backwater Valve	B*	1	8
869-2P	2" PVC Backwater Valve	B*	1	8
869-23	Access Sleeve Kit For 2" Valve – Collar/Sleeve/Lid	B*	1	1
869-6A	6" ABS Backwater Valve	B	1	1
869-6P	6" PVC Backwater Valve	B	1	1
869-6A1	Threaded Lid For 6" Valve, Black with O-Ring	B	1	2
869-6P1	Threaded Lid For 6" Valve, White with O-Ring	B	1	2
869-60	O-Ring For 6" Threaded Lid	B	1	10
869-61	Flapper & O-Ring For 6" Valve	B	1	10
869-63	Access Sleeve Lid For 6" Valve	B	1	15

PACKAGING:
B = Bulk C = Cut Case
* = Individually Bar-Coded

www.siouxchief.com #L12-PROCHK 3.20

14943 Thunderbird Road
Kansas City, MO 64147
P 1.800.821.3944
F 1.800.758.5950

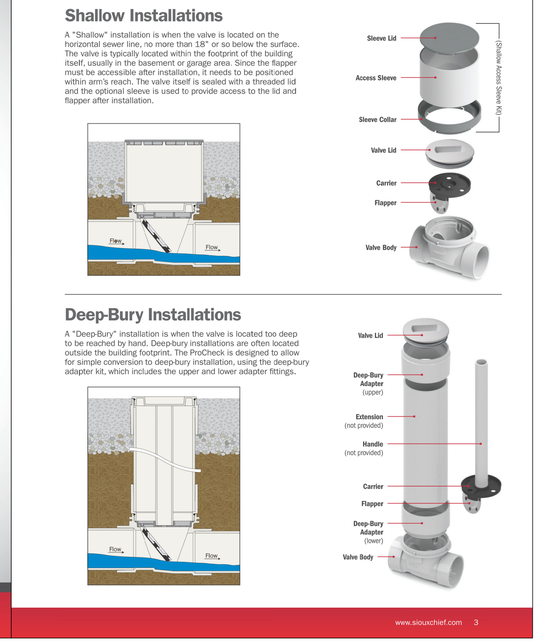

www.siouxchief.com 3

BACKWATER VALVE INSTALLATION

DETAIL

SCALE: NONE

3
P4.13

County of Santa Clara
San Jose, California 95110

USE of ALTERNATE APPLICATION for the
Electrical Code Article 90 Plumbing Code Section 301.3 [ ] 2019 CA

APPLICANT
Name: Kelly Hollywood

Fax: Telephone: 415.355.7166

SITE
Describe Use: 110 UNIT MULTIFAMILY AFFORDAB

REQUEST
Subject of Alternative:
Alternate Proposed: USE OF

JUSTIFICATION

Recommendation: Approve [ ] Deny

Building Official
Date

Fire Marshal

PVC PIPING FOR UNDERSLAB MATERIALS. USE OF
RSLAB ONLY. IN A RESIDENTIAL OF PVC IN THE UNDE
LDING USE GROUP R FOR DRAINAGE. REST OF BU

PLUMBING AMMR

DETAIL

SCALE: NONE

1
P4.13

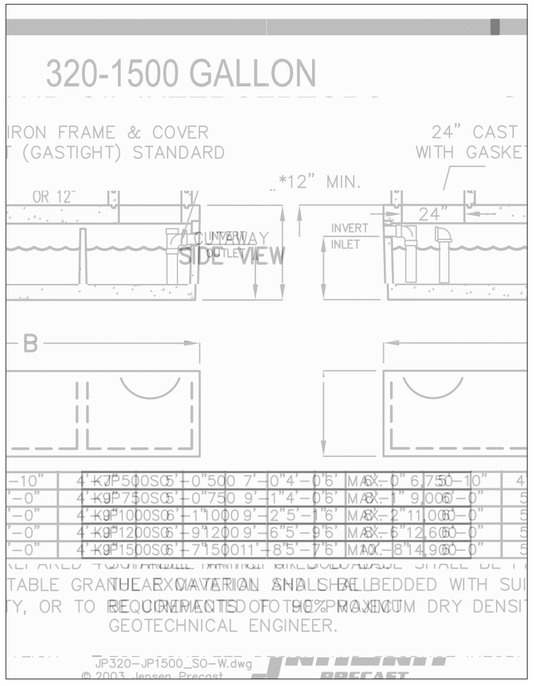

OWS-1 SPEC SHEET

DETAIL

SCALE: NONE

2
P4.13

COUNTY OF SANTA CLARA
BUILDING INSPECTION OFFICE
PLANS APPROVED FOR PERMIT
RECORD NO.: DEV22-1242
BY: Warren Krause Date: 7/28/2023
HARD COPY OF THESE STAMPED PLANS MUST BE ON THE SITE FOR INSPECTIONS

COPYRIGHT 2023, EMERALD CITY ENGINEERS, INC.
K:\STEPHENS A\2293-007 231 GRANT, PALO ALTO, CA\DWG\P413 DETAILS & DIAGRAMS.DWG 05-30-2023 10:52

VAN METER WILLIAMS POLLACK LLP
ARCHITECTURE | URBAN DESIGN ■ SAN FRANCISCO | DENVER | MINNEAPOLIS
333 Bryant Street, Suite 300, San Francisco, CA 94107 T 415.974.5252

☐ CIVIL ENGINEER
BKF - SAN JOSE
1730 N. FIRST ST. STE 600
SAN JOSE, CA 95112

☐ LANDSCAPE ARCHITECT
PLURAL STUDIO
2742 17TH STREET
SAN FRANCISCO, CA 94110

☐ STRUCTURAL ENGINEER
HOHBACH-LEWIN
250 SHERIDAN AVE STE 100
PALO ALTO, CA 94306

☐ MEP ENGINEER
EMERALD CITY ENGINEERS
21705 HIGHWAY 99
LYNWOOD, WA 98036

☐ SUSTAINABILITY/ENERGY
REDWOOD ENERGY
1887 Q STREET
ARCATA, CA 95521

EMERALD CITY ENGINEERS, INC
21705 Highway 99
Lynnwood, WA 98036
TEL: 425-741-1200

REGISTERED PROFESSIONAL ENGINEER
MASSAMAGHAN KONGTHAI
No. 32806
EXP: 03-31-24
MECHANICAL
STATE OF CALIFORNIA

07/27/23

ID	DATE	NAME
1	11/11/22	PERMIT SET - CONV
A	12/16/22	BID SET
B	03/20/23	BID ADDENDUM SET
2	03/20/23	PLAN CHECK COMMENT RESPONSES SET
3	05/18/23	PLAN CHECK COMMENT RESPONSES SET
3	06/12/23	GRADING PERMIT
4	07/27/23	BUILDING RESUBMITTAL

Project:

EDUCATOR HOUSING
231 GRANT AVENUE

231 GRANT AVENUE
PALO ALTO, CA 94306

Client:

mercy HOUSING
abode communities
MERCY HOUSING/
ABODE COMMUNITIES

DETAILS & DIAGRAMS

JOB #: 2293-007

SCALE:

P4.13

GRADING PERMIT | DATE: 06/12/2023

GENERAL NOTES

GENERAL

1. PROVIDE ELECTRICAL INSTALLATION IN ACCORDANCE W/ NATIONAL ELECTRICAL CODE, NATIONAL ELECTRICAL SAFETY CODE, LOCAL CODES, ORDINANCES, AND REQUIREMENTS OF UTILITY COMPANIES FURNISHING SERVICES TO INSTALLATION.
2. PROVIDE ITEMS NECESSARY TO COMPLETE ELECTRICAL SYSTEMS. THE ELECTRICAL DRAWINGS ARE DIAGRAMMATIC AND DO NOT NECESSARILY SHOW EVERY CONDUIT, BOX, CONDUCTOR, OR SIMILAR ITEMS FOR A COMPLETE INSTALLATION.
3. THE CONTRACTOR SHALL VISIT THE SITE PRIOR TO BID AND DETERMINE CONDITIONS WHICH MAY AFFECT BID. ANY ITEMS NOT FULLY UNDERSTOOD SHALL BE BROUGHT TO THE ATTENTION OF THE ARCHITECT PRIOR TO BIDDING.
4. "REF" INDICATIONS DENOTE WORK COVERED ELSEWHERE (ARCHITECTURAL, STRUCTURAL, OR MECHANICAL).
5. WHEREVER THE WORD "PROVIDE" IS USED, IT MEANS FURNISH AND INSTALL COMPLETE AND READY FOR USE.
6. COORDINATE LOCATION OF ELECTRICAL WITH OTHER TRADES.
7. REFER TO EQUIPMENT DRAWINGS FOR MECHANICAL CHARACTERISTICS (SIZE, LOCATION, ETC.) OF MECHANICAL EQUIPMENT UNLESS OTHERWISE INDICATED.
8. PROVIDE CONDUCTORS AND RACEWAYS PER NATIONAL ELECTRICAL CODE.

MATERIALS AND METHODS

9. PROVIDE RACEWAY AND WIRING AS NOTED, ROUTED CONCEALED WITHIN BUILDING STRUCTURE WHERE POSSIBLE (EXCEPTION INCLUDES GARAGE & BOH/UTILITY ROOMS) ANY EXPOSED WIRING IS TO BE SENT AS A RFI FOR OWNER, ARCHITECT, & ENGINEER REVIEW.
10. OUTDOOR EXPOSED CONDUIT ROUTING: CONDUITS ROUTED ON ROOF OR EXPOSED TO WEATHER SHALL BE EMT OR LIQUID–TIGHT FLEX. PROVIDE WATER–TIGHT CONNECTIONS AND FITTINGS. CONDUITS ON THE ROOF TO BE A MINIMUM 1" ABOVE THE ROOF SURFACE.
11. CLEARANCES: VERIFY PHYSICAL DIMENSIONS OF EQUIPMENT TO ENSURE THAT ACCESS CLEARANCES CAN BE MET.
12. CONNECTIONS: PROVIDE GRS, METALLIC FLEX, OR LIQUIDTITE FLEX CONDUITS FOR CONNECTIONS TO MOTORS OR MOTORIZED EQUIPMENT.
13. WIRING: MINIMUM TO BE #12 AWG WIRE IN COMMON AREAS, #14 WITHIN DWELLING UNITS ONLY. NON–METALLIC CABLE (ROMEX) IS ALLOWED IN TYPE III OR V CONSTRUCTION ONLY, INSTALLED PER NEC.
14. APARTMENT FEEDERS ARE TO MAINTAIN SUFFICIENT SPACING FOR TEMPERATURE REGULATION. AT NO POINT SHALL FEEDERS BE ROUTED SUCH THAT THEY ARE BUNDLED TIGHTLY WITHOUT SUFFICIENT SPACING FOR MORE THAN 24–INCHES CONTINUOUS.
15. FEEDERS TO BE MC CABLE IF THE FEEDER PASSES THROUGH TYPE I CONSTRUCTION.
16. WIRING: UPSIZE BRANCH CIRCUITS TO LIMIT TO 2% MAXIMUM.
17. WIRING: POWER WIRING SHALL BE COPPER, THWN/THHN, INSULATED FOR 600V. ALUMINUM CONDUCTORS PERMITTED FOR FEEDERS 100 AMPS OR LARGER. INCREASE WIRE AND CONDUIT SIZE TO EQUAL OR EXCEED DESIGNED COPPER RATING (INCLUDING GROUND).
18. DISCONNECTS:
    - 18.1. PROVIDE DISCONNECTS, FUSED AND UNFUSED, SHOWN AND REQUIRED BY CODE FOR EQUIPMENT FURNISHED UNDER ELECTRICAL AND MECHANICAL SCOPES OF WORK. REFER TO COORDINATION MATRIX.
    - 18.2. OUTDOOR DISCONNECTS: PROVIDE ALL NECESSARY MEMBRANE PENETRATIONS WITH WATERPROOFING PER ARCHITECTURAL SPECIFICATIONS.
    - 18.3. ALL DISCONNECTS TO MAINTAIN CODE MINIMUM WORKING CLEARANCE (30" WIDTH, 36" DEPTH) AND ACCESS.
    - 18.4. INDOOR DISCONNECTS: ALLOWED TO BE INSTALLED ABOVE A CEILING PER 404.8 EX:2, PROVIDE ACCESS PANEL MINIMUM 22" X 22" PER 110.26(A)(4).
19. FUSES: PROVIDE FUSES PER EQUIPMENT NAMEPLATE UNLESS OTHERWISE INDICATED. FUSES SHALL BE PROVIDED WITH REJECTION TYPE FUSE HOLDERS.
20. SUPPORT: SUPPORT LIGHT FIXTURES FROM BUILDING STRUCTURE. DO NOT SUPPORT FIXTURES FROM SUSPENDED CEILING.
21. LABELS: ELECTRICAL PANEL, TIME SWITCH, DISCONNECT, STARTER, CONTACTOR, PULL BOX, ETC. ENCLOSURES SHALL BE PERMANENTLY LABELED TO IDENTIFY ITS DESIGNATION OR UNIT SERVED. PANEL SCHEDULES MUST BE TYPED.
22. PAINTING: ELECTRICAL ENCLOSURES SHALL BE PAINTED TO MATCH ADJACENT WALL.
23. COVERPLATES: PROVIDE AS FOLLOWS, SUBMIT SAMPLE OF EACH FOR APPROVAL:
    - 23.1. COMMERCIAL KITCHENS: STAINLESS STEEL SWITCH PLATES, WITH BLACK DEVICES.
    - 23.2. ALL OTHER AREAS: WHITE COLOR PLASTIC
24. ELECTRICAL CONTRACTOR SHALL REVIEW THE LANDSCAPE PLANS FOR ALL REQUIRED IRRIGATION CONTROL WIRING RACEWAY REQUIREMENTS.
25. OUTLET BOXES SHALL NOT BE INSTALLED BACK TO BACK.

SITE ELECTRICAL

26. TRENCHING: COORDINATE ALL TRENCHING WORK WITH OTHER UTILITY LOCATIONS AND DRAINAGE TRENCHES.
27. UNDERGROUND CONDUITS: PROVIDE PVC, SCHEDULE 40, 3/4" MINIMUM. PROVIDE PVC CONDUIT TRANSITION ELBOW WHEN TURNING UP TO ABOVE GRADE.
28. BELOW SLAB: CONDUIT ROUTED BELOW ON–GRADE FLOOR SLABS SHALL BE INSTALLED PRIOR TO FLOOR SLAB POUR. ROUTE CONDUITS BELOW SLAB AS STRAIGHT AS POSSIBLE TO MINIMIZE BENDS.
29. ALL CONDUITS PENETRATING THE BUILDING ENVELOPE BELOW GRADE SHALL FOLLOW WATERPROOFING REQUIREMENTS IN THE ARCHITECTURAL DRAWINGS.

NEUTRALS

30. AT CONTRACTORS OPTION, NEUTRALS MAY BE SHARED ON COMBINED HOMERUNS UNLESS THE CIRCUIT HAS A GFCI OR AFCI BREAKER, AN ISOLATED GROUND, OR IS FROM A PANEL WITH SPD (TVSS) PROTECTION. ANY NEUTRAL DOWNSTREAM FROM A DIMMER SHALL BE DEDICATED TO THE DIMMED LOAD.
31. NEUTRAL WIRES SHOWN FOR TWO AND THREE POLE MECHANICAL AND KITCHEN EQUIPMENT MAY BE OMITTED UPON VERIFICATION THAT THEY ARE NOT REQUIRED EITHER FOR OPERATION OR CONTROL CIRCUITS PER MANUFACTURER'S SPECIFICATIONS.

LIGHTING

32. PROVIDE LIGHT FIXTURES W/ PROPER FITTING FLANGES, MOUNTING SUPPORTS, AND ACCESSORY ITEMS UL LISTED FOR CONDITIONS OF USE.
33. LOW VOLTAGE LIGHTING
    - 33.1. PROVIDE LOW VOLTAGE TRANSFORMERS IN NEARBY ACCESSIBLE CEILING SPACE.
    - 33.2. PROVIDE LOW VOLTAGE CONDUCTORS SIZED PER MANUFACTURER'S GUIDELINES TO MINIMIZE VOLTAGE DROP.

LIGHTING CONTROL

34. THE MAXIMUM LIGHTING POWER THAT MAY BE CONTROLLED FROM A SINGLE SWITCH OR AUTOMATIC CONTROL SHALL NOT EXCEED THAT WHICH IS PROVIDE BY A TWENTY AMPERE CIRCUIT LOADED TO NOT MORE THAN EIGHTY PERCENT. A MASTER CONTROL MAY BE INSTALLED PROVIDED THE INDIVIDUAL SWITCHES RETAIN THEIR CAPABILITY TO FUNCTION INDEPENDENTLY.
35. EXIT SIGNS, BATTERY BALLASTS, & EMERGENCY FIXTURES SHALL BE CONNECTED TO AN UNSWITCHED LEG OF THE DESIGNATED CIRCUIT.
36. NO LIGHTING SHALL BE ON THE SAME CIRCUIT BREAKER AS EQUIPMENT LOADS.
37. ALL LIGHTING SWITCHES SHALL BE MOUNTED WITH TOP OF SWITCH AT 48" AFF, 44" AFF IF OVER OBSTRUCTION.
38. ALL OCCUPANCY SENSORS WITHIN ENCLOSED ROOMS ARE TO BE BE AUTOMATIC OFF, MANUAL ON. PROVIDE LIGHTING CONTROL SYSTEM CAPABLE OF THIS REQUIREMENT PER ENERGY CODE.

ELEVATOR

39. IF BATTERY LOWERING DEVICE IS PROVIDED, PROVIDE AUXILIARY CONTACTS AT FUSED DISCONNECT SWITCH & BREAKER.

MISCELLANEOUS

40. PROVIDE DECORA SWITCHES & OUTLETS IN UNITS & COMMON PUBLIC AREAS. TOGGLE SWITCHES & STANDARD OUTLETS ACCEPTABLE IN MECH, ELEV, AND ELEC ROOMS
41. PROVIDE ALL NECESSARY FIRE CAULKING & FIRE STOPPING FOR ALL ELECTRICAL EQUIPMENT.
42. TAMPER RESISTANT RECEPTACLES ARE REQUIRED FOR ALL 15A AND 20A 120V RECEPTACLES LOCATED IN DWELLING UNITS.
43. ALL ELECTRICAL ACCESS PANELS ARE TO BE PROVIDED BY THE ELECTRICIAN. SEE SPECIFICATIONS FOR MATERIALS AND APPROVED MANUFACTURERS.
44. IF MAGNETIC DOOR HOLDERS ARE 120V, PROVIDE POWER FROM NEAREST CONVENIENCE RECEPTACLE CIRCUIT.
45. SUB–GRADE ELECTRICAL ROOMS: PROVIDE HOUSEKEEPING PAD FOR ALL SWITCHGEAR LOCATED IN SUB–GRADE ELECTRICAL ROOMS. HOUSEKEEPING PAD TO BE LESS THAN 2" IN HEIGHT.
46. APARTMENT LOAD CENTERS ARE TO BE FACTORY FINISHED WHITE.
47. WATER SUBMETER REPEATERS TO BE LOCATED IN IDF CLOSETS, PLUGGED INTO THE SHOWN WALL OUTLETS.

DESIGN/BUILD SYSTEMS

STRUCTURED CABLING (TELEPHONE, DATA, TV):
DESIGN AND PROVIDE COMPLETE, OPERATING, AND FULLY FUNCTIONAL TEL/DATA/TV WIRING SYSTEM PER OWNER & VENDOR REQUIREMENTS. SEE PLANS FOR OUTLET LOCATIONS, WIRING REQUIREMENTS, AND SERVICE ENTRANCE REQUIREMENTS. SUCCESSFUL SUB–CONTRACTOR IS RESPONSIBLE FOR WIRING TERMINATIONS AT THE OUTLETS AND RESPONSIBLE FOR COORDINATING WITH VENDOR ON WIRING TERMINATIONS AT THE EQUIPMENT. COORDINATE WITH ALL THE OWNER REQUESTED VENDORS FOR SCOPE DIFFERENTIATION. COORDINATE TERMINATION TYPES WITH EQUIPMENT VENDOR. VERTICAL RISERS ARE TO BE IN RACEWAY, HORIZONTAL WIRING TO BE CABLE. IT IS THE CONTRACTORS RESPONSIBILITY TO PROVIDE ALL CONDUIT AND LOW VOLTAGE WIRING WITH THE EXCEPTION OF WIRING UPSTREAM OF THE DEMARCATION AND TRUNKLINE CABLING (COORDINATE WITH VENDOR).

FIRE ALARM SYSTEM (283100):
DESIGN AND PROVIDE COMPLETE, OPERATING, AND FULLY FUNCTIONAL FIRE DETECTION ALARM SYSTEM THAT MEETS ALL LOCAL CODES AND ORDINANCES. SUCCESSFUL SUB–CONTRACTOR SHALL SUBMIT FULL SET OF PLANS TO OWNER, INDICATING DEVICE LOCATIONS, WIRING, CONNECTIONS, AND SPECIAL MOUNTING DETAILS. REFER TO ELECTRICAL PLANS FOR MAIN EQUIPMENT LOCATIONS. SUBMIT PLANS AND OBTAIN PERMIT FROM LOCAL AHJ. DEVICES SHOWN ON PLANS ARE FOR REFERENCE ONLY AND ARE ONLY INTENDED AS DESIGN INTENT.

ALL DWELLINGS UNITS AND SLEEPING UNITS SHALL BE PRE–WIRED TO SUPPORT FUTURE INSTALLATION OF VISIBLE NOTIFICATION APPLIANCES IN ALL UNITS. THE WIRING SHALL NOT BE LIMITED TO FIRE ALARM NOTIFICATION CIRCUITS AND THE ASSOCIATED JUNCTION BOXES, AND DEPENDING ON THE DESIGN MAY INCLUDE SIGNALING LINE OR INITIATING CIRCUITS. IN LIEU OF ACTUAL PRE–WIRING, APPROVED ELECTRICAL CONDUIT INSTALLED IN ALL UNITS WITH SUITABLE JUNCTION BOXES AND DIRECT TERMINATION AT THE FIRE ALARM CONTROL UNIT LOCATION WOULD BE AN ACCEPTABLE ALTERNATIVE. THE FIRE ALARM DESIGNER SHALL PROVIDE COMPLETE PLANS, WHICH SHALL INCLUDE DETAILS SHOWING HOW FUTURE VISIBLE APPLIANCE EXPANSIONS ARE TO BE ACCOMPLISHED. VISIBLE APPLIANCES, CONNECTIONS TO SMOKE ALARMS OR SYSTEM DETECTORS AND ADDITIONAL FIRE ALARM EQUIPMENT (NAC PANELS, POWER SUPPLIES, BATTERIES, ETC) NECESSARY FOR FUTURE EXPANSION NEED NOT BE INSTALLED UNTIL VISIBLE APPLIANCES ARE DEEMED NECESSARY. CFC 907.5.2.3.3

FIRE SMOKE DAMPERS REQUIRE A SMOKE DETECTOR TO BE LOCATED WITHIN ALL ROOMS SERVED BY THE DUCT SYSTEM TO INITIATE FIRE SMOKE DAMPER ACTUATION & HVAC UNIT SHUTDOWN. THIS IS TO BE INCORPORATED INTO THE FIRE ALARM SYSTEM. CBC 717.3.3.2.5

LOW FREQUENCY AUDIBLE NOTIFICATION APPLIANCES ARE REQUIRED WITHIN ALL SLEEPING UNITS.

LEED 10.2(b) | GPR 09.2: PROVIDE CO DETECTORS IN ALL ROOMS THAT SHARE A DOOR WITH THE GARAGE.

IN ELEVATOR SHAFTS, PROVIDE A VESDA AIR ASPIRATING SMOKE DETECTOR. PROVIDE CONNECTION TO FACP AND PROVIDE REMOTE LED INDICATOR (LOCATION TO BE BY FIRE ALARM CONTRACTOR APPROVED BY AHJ). CONFIRM WITH ARCHITECT IF REQUIRED.

ELECTRONIC SURVEILLANCE (282300):
DESIGN AND PROVIDE COMPLETE, OPERATING, AND FULLY FUNCTIONAL SECURITY CCTV CAMERA SYSTEM BASED ON OWNER REQUIREMENTS. ALL WIRING IS TO BE IN CONDUIT. CAMERAS TO BE WIRED TO A DVR LOCATED IN THE MANAGEMENT OFFICE. DVR TO HOLD 28 DAYS. CAMERAS TO BE GLOBE TYPE FOR READJUSTING. REFER TO PLANS FOR LOCATIONS.

ACCESS CONTROL 281300:
DESIGN AND PROVIDE COMPLETE, OPERATING, AND FULLY FUNCTIONAL FOB ENTRY SYSTEM WITH ENTRY CALL BOX BASED ON OWNER REQUIREMENTS. CARD READER SYSTEM TO BE PROGRAMMABLE WITH TIME ACCESS LIMITATIONS, AND TRACK USER DATA.

EMERGENCY RESPONDER RADIO COVERAGE SYSTEM (ERRCS):
CONTRACTOR SHALL PROVIDE A FULLY FUNCTIONAL AND CODE COMPLIANT ERRCS SYSTEM TO PROVIDE SUFFICIENT RADIO COVERAGE THROUGHOUT THE BUILDING. GENERAL CONTRACTOR SHALL CARRY A BUDGET TO COVER A FULL COVERAGE SYSTEM. DESIGN/BUILD CONTRACTOR SHALL PROVIDE DESIGN PLANS FOR DESIGN TEAM TO REVIEW. HEADEND EQUIPMENT TO BE LOCATED IN A LOCATION FOR EASY VENTILATION.

2–WAY COMMUNICATION SYSTEM:
CONTRACTOR SHALL PROVIDE A FULLY FUNCTIONAL AND CODE COMPLIANT 2–WAY COMMUNICATION SYSTEM. PLANS ARE TO BE SUBMITTED TO THE LOCAL FIRE DEPARTMENT FOR PERMITTING. DEVICES SHOWN ON PLANS ARE FOR REFERENCE ONLY AND ARE ONLY INTENDED AS DESIGN INTENT.

ABBREVIATIONS

A	AMPERE
AC	ALTERNATING CURRENT, ABOVE COUNTER
AFF	ABOVE FINISHED FLOOR
AIC	AMPS INTERRUPTING CAPACITY
AL	ALUMINUM
AMP	AMPERE
ATS	AUTOMATIC TRANSFER SWITCH
AWG	AMERICAN WIRE GAUGE
BRKR	BREAKER
BLDG	BUILDING
BOH	BACK OF HOUSE
C	CONDUIT
CEC	CALIFORNIA ELECTRICAL CODE
CKT	CIRCUIT
CO	CARBON MONOXIDE
CLG	CEILING
CT	CURRENT TRANSFORMER
Cu	COPPER
CW	COOL WHITE
D/B	DESIGN/BUILD
DCO	DUPLEX CONVENIENCE OUTLET
DISP	GARBAGE DISPOSAL
DN	DOWN
DW	DISHWASHER
EXIST	EXISTING
EF	EXHAUST FAN
ELEC	ELECTRICAL
EMT	ELECTRICAL METALLIC TUBING
ENT	ELECTRICAL NON–METALLIC TUBING
ERRCS	EMERGENCY RADIO RESPONDER COVERAGE SYSTEM
EQUIP	EQUIPMENT
FACP	FIRE ALARM CONTROL PANEL
FLR	FLOOR
FLUOR	FLUORESCENT
FOH	FRONT OF HOUSE
GEC	GROUNDING ELECTRODE CONDUCTOR
GFCI	GROUND FAULT CIRCUIT INTERRUPTER
GND	GROUND
GRS	GALVANIZED RIGID STEEL
HID	HIGH INTENSITY DISCHARGE
HP	HORSEPOWER
HPWH	HEAT PUMP WATER HEATERS
HT	HEAT TRACE
IC	INSULATED CEILING RATED
IDF	INTERMEDIATE DISTRIBUTION FRAME
IG	ISOLATED GROUND
JT	JOINT TRENCH
KCMIL	THOUSAND CIRCULAR MILLS
KEC	KITCHEN EQUIPMENT CONTRACTOR
KVA	KILOVOLT AMPERES
KW	KILOWATT
LTG	LIGHTING
MATV	MASTER ANTENNA TELEVISION
MFR	MANUFACTURER
MIN	MINIMUM
MLO	MAIN LUGS ONLY
MPOE	MAIN POINT OF ENTRY
N	NEUTRAL
NIC	NOT IN CONTRACT
NEC	NATIONAL ELECTRICAL CODE (NFPA–70)
NEMA	NATIONAL ELECTRICAL MANUFACTURERS ASSOCIATION
NTS	NOT TO SCALE
OS	OCCUPANCY SENSOR
PC	PHOTOCELL
PNL	PANEL
POC	POINT OF CONNECTION
PT	POTENTIAL TRANSFORMER
PVC	POLYVINYL CHLORIDE
PWR	POWER
QTY	QUANTITY
RECEPT	RECEPTACLE
ROMEX	ELECTRICAL NM CABLE
SD	SMOKE DETECTOR
SER	SERVICE ENTRANCE CABLE
SPEC	SPECIFICATIONS
SW	SWITCH
SWBD	SWITCHBOARD
SWGR	SWITCHGEAR
TTB	TELEPHONE TERMINAL BOARD
TYP	TYPICAL
UG	UNDERGROUND
UL	UNDERWRITERS LABORATORIES
UON	UNLESS OTHERWISE NOTED
UTIL	UTILITY
V	VOLTS
VS	VACANCY SENSOR
W	WATTS
WW	WARM WHITE
WP	WEATHERPROOF
W/	WITH
W/O	WITHOUT
XFMR	TRANSFORMER
XFR	TRANSFER
Z	IMPEDANCE OR ZONE

BIDDING NOTES

THE FOLLOWING SYSTEMS ARE TO BE INCLUDED IN THE BIDDING OF THE PROJECT. ANY QUESTIONS NEED TO BE PRESENTED DURING THE BIDDING PHASES. CHANGE ORDERS ARE NOT ALLOWED FOR ANY OF THE ITEMS LISTED BELOW:

1. POWER TO ALL POWERED DOORS INCLUDING GARAGE DOOR AND ALL NECESSARY WIRING & CONNECTIONS.
2. POWER TO ALL ELECTRONIC DOOR STRIKES (FROM NEAREST 120V GENERAL PURPOSE RECEPTACLE CIRCUIT).
3. RACKING IN PBX ROOM AND IDF ROOMS.
4. SMOKE GUARDS: PROVIDE 120V POWER TO DEVICE AND FIRE ALARM SMOKE DETECTOR LOCATED OUTSIDE EACH PAIR OF ELEVATOR DOORS. REFER TO ARCH PLANS FOR LOCATIONS AND QUANTITY. COORDINATE WITH FIRE ALARM CONTRACTOR.
5. ALL NECESSARY ROOF PENETRATIONS TO THE LIGHTING AND EQUIPMENT SHOWN PER PLANS.
6. ALL RECESSED ITEMS PENETRATING RATED ASSEMBLIES SHALL BE PROVIDED WITH FIRE RATED PROTECTION. CONTRACTOR SHALL PROVIDE FIRE PROTECTIVE DEVICES (INCLUDING LUMINARIES AND BOXES) TO MAINTAIN FIRE RATING.
7. ELECTRICAL CONTRACTOR SHALL PROVIDE FIRE CAULKING AND PUTTY PADS FOR PENETRATIONS THROUGH RATED ASSEMBLIES.
8. ELECTRICAL CONTRACTOR SHALL PROVIDE WIRING FOR DUCT SMOKE DETECTORS.
9. ALL FLOOR OUTLETS TO BE BRASS. PROVIDE AND INSTALL STEEL CITY SERIES FLOOR BOX 664–SC UNLESS OTHERWISE NOTED.
10. INSTALLATION OF ALL LOW VOLTAGE LIGHTING TRANSFORMERS AND REMOTE DRIVERS. NOT SHOWN ON PLANS, TO BE COORDINATED BY THE ELECTRICAL CONTRACTOR.
11. TRASH CHUTE SYSTEM WIRING PER INSTALLATION MANUAL.
12. LIGHTING IN GARAGES AND BOH SPACES: LIGHT FIXTURES AND EXIT SIGNS MAY NEED TO BE SUSPENDED DUE TO OTHER TRADES & INSULATION, PROVIDE HANGING SUPPORTS WHERE NECESSARY. IN GARAGES OVER 10–FT HIGH, PROVIDE HANGERS TO MOUNT AT A MAX OF 10–FT.
13. CONTRACTORS MANUFACTURER SHALL PROVIDE A SELECTIVE COORDINATION STUDY OF THE ELEVATORS & EMERGENCY/LEGALLY REQUIRED STANDBY ELECTRICAL SYSTEM.
14. POWER TO ALL FIRE ALARM POWER SUPPLIES (PER DESIGN/BUILD FIRE ALARM PLANS).
15. CONNECTION TO ROOFTOP AMENITY EQUIPMENT (INCLUDING FIRE PITS WITH CIRCUITRY AS SHOWN).
16. UTILITY COMPANY REMOTE METER CONDUIT AND ANTENNA JBOX AS SHOWN PER PLANS.
17. PUMPS: CONDUIT AND WIRING FROM THE PUMP TO THE CONTROL BOX. CONTROLLER LOCATION TO BE PER PLUMBING CONTRACTOR.
18. AMENITY AREA COOKING HOODS TO HAVE ACCESSIBLE CONTROLS. ON/OFF SWITCH MAY NOT BE COMPATIBLE WITH THE SPECIFIED HOOD. PROVIDE BROAN 66W REMOTE 3–BUTTON WALL SWITCH WITH BROAN 40000–SERIES HOODS AS BASIS OF DESIGN. CONFIRM WITH ID PLANS PRIOR TO ANY INSTALLATION.

CODES

CODES:

- CALIFORNIA ELECTRIC CODE 2019
- CALIFORNIA BUILDING CODE 2019
- CALIFORNIA FIRE CODE 2019
- NATIONAL ELECTRIC CODE 2017
- CALIFORNIA TITLE–24 ENERGY CODE 2019
- CALIFORNIA GREEN BUILDING STANDARD 2019

SANTA CLARA COUNTY REACH CODE:
SECTION 4.106.4.2 NEW MULTIFAMILY HOUSING:
FIRST 20 PARKING SPACES LEVEL 2 EV READY + 25% LEVEL 2 EV READY SPACES AND REMAINDER WITH LEVEL 1 EV READY.

SECTION 4.106.4.2.3 AUTOMATED LOAD MANAGEMENT SYSTEM SHALL BE ALLOWED TO MEET REQ. OF 4.106.4.2. (MINIMUM 1.4KW LOAD CAPACITY PER PARKING SPACE.)

LOW LEVEL EXIT SIGNS ARE NOT REQUIRED IN THE CORRIDORS FOR APARTMENT BUILDINGS (ONLY IN CORRIDORS OF HOTELS)

PALO ALTO CODE:
PROVIDE METAL PLATE ON BACK OF ELECTRICAL OUTLETS IN 2X4 WALLS FOR PROTECTION PER CITY OF PALO ALTO.

PRE-CONSTRUCTION MEETING

CONTRACTORS SHALL ATTEND A PRE–CONSTRUCTION MEETING WITH THE ENGINEER FOR THE PURPOSE OF REVIEWING THE WORK PRIOR TO ORDERING ANY EQUIPMENT OR PERFORMING ANY WORK. THE MEETING SHALL BE LOCATED AT THE PROJECT SITE ON A DATE AND TIME TO BE MUTUALLY AGREED. THE MEETING WILL BE A WORKING SESSION. THE MEETING WILL BE FACILITATED BY THE ENGINEER AND THE AGENDA WILL INCLUDE A DETAILED REVIEW OF THE PLANS AND SPECIFICATIONS, CROSS CHECK WITH OTHER TRADES FOR COORDINATION ISSUES, REVIEW OF PROPOSED PRODUCTS, REVIEW OF PLANNED MEANS AND METHODS,AND ON–SITE INVESTIGATION OF FIELD CONDITIONS RELATIVE TO EXISTING CONDITIONS THAT COULD AFFECT THE WORK. PERSONS ATTENDING THE MEETING SHALL BE KNOWLEDGEABLE OF THE PROJECT AND SHALL BE THE SPECIFIC PERSONS INTENDED TO CONTINUE WITH THE PROJECT THROUGH TO COMPLETION. IF REQUIRED, REVISED PLANS WILL BE ISSUED THROUGH OFFICIAL CHANNELS. CHANGES IN THE BID PRICE WILL BE DISCUSSED, BUT NO CHANGE ORDERS WILL BE ISSUED UNLESS PROCESSED THOUGH OFFICIAL CHANNELS. IT SHALL BE UNDERSTOOD THAT THE ENGINEER HAS NO AUTHORITY TO ISSUE CHANGE ORDERS.

THE FOLLOWING TRADES SHALL BE REPRESENTED FOR THE MINIMUM TIME INDICATED:

MECHANICAL SHEET METAL	2 HOURS
PLUMBING/PIPING	2 HOURS
ELECTRICAL	2 HOURS
GENERAL CONTRACTOR	ALL SESSIONS

LEGEND

##	LIGHT FIXTURE CALLOUT
	ILLUMINATED EXIT SIGN, ARROWS AS INDICATED
$	SINGLE POLE, SINGLE THROW LIGHT SWITCH, 20A (WP = WEATHERPROOF COVER)
$3	THREE–WAY LIGHT SWITCH, 20A
$4	FOUR–WAY LIGHT SWITCH, 20A
$T	TIMER SWITCH
	DIMMER SWITCH
$a	SWITCH, SINGLE POLE; WITH SWITCHING SUBSCRIPT 'a'
x y $OS	DUAL SWITCHES, BOTH WITH OCCUPANCY SENSOR CONTROL
$OS	OCCUPANCY SENSOR, WALL MOUNTED
OS	OCCUPANCY SENSOR, CEILING MOUNTED
	SINGLE RECEPTACLE, GROUNDED
	DUPLEX RECEPTACLE
	DUPLEX RECEPTACLE, 1/2 HOT
IG	DUPLEX RECEPTACLE, ISOLATED GROUND
GFCI	DUPLEX RECEPTACLE WITH GROUND FAULT INTERRUPTION (GFCI)
	DUPLEX RECEPTACLE WITH GROUND FAULT INTERRUPTION (GFCI) LOCATED ABOVE COUNTER
	QUAD RECEPTACLE, GROUNDED
PC	PHOTOCELL
WP GFCI	DUPLEX RECEPTACLE, GFCI WITH WEATHERPROOF COVER EXTRA DUTY AND WEATHER RESISTANT RECEPTACLE
	FLOOR OUTLET BOX WITH DUPLEX RECEPTACLE
	SPECIAL PURPOSE RECEPTACLE AS NOTED
SD	PHOTOELECTRIC SMOKE DETECTOR (120V IN APARTMENT UNITS, POWERED BY FIRE ALARM SYSTEM ELSEWHERE)
CO	COMBINATION SMOKE & CARBON MONOXIDE DETECTOR (120V IN APARTMENT UNITS, POWERED BY FIRE ALARM SYSTEM ELSEWHERE)
T	THERMOSTAT
	JUNCTION BOX
	CCTV SECURITY CAMERA

DOOR ACCESS/CONTROL EQUIPMENT

A	INTRUSION DETECTION (DOOR OR WINDOW)
B	DOOR DETECTOR BUZZER IF PROPPED OPEN
C	EMERGENCY EXIT ONLY, DOOR TO HAVE SOUNDER WHEN OPEN
FA	DOOR TO AUTOMATICALLY OPEN IN A FIRE ALARM EVENT
CR	KEY CARD READER ACCESS FOB

HTV	TELEVISION CABLE OUTLET
	TELEPHONE OUTLET, MOUNTED AT 18" UNLESS OTHERWISE INDICATED
	DATA OUTLET, MOUNTED AT 18" UNLESS OTHERWISE INDICATED
	TELEPHONE & DATA OUTLET IN DUPLEX BOX
HTV	SINGLE GANG JBOX WITH 1 DATA AND 1 TV OUTLET
	PANELBOARD
	ELECTRICAL DISTRIBUTION EQUIPMENT
	CIRCUIT BREAKER DISCONNECT SWITCH
	NON–FUSED DISCONNECT SWITCH
	FUSED DISCONNECT SWITCH
	MAGNETIC MOTOR STARTER
	COMBINATION MAGNETIC MOTOR STARTER AND DISCONNECT SWITCH
C	CONTACTOR
T	THERMOSTAT
	MOTOR CONNECTION
$M	MOTOR RATED SWITCH
T	TRANSFORMER
	EQUIPMENT CONNECTION, REFER TO DESCRIPTION ON PLANS FOR WHICH SPECIFIC EQUIPMENT CONNECTION.

COMMON EQUIPMENT CONNECTIONS:

WH	120V CONNECTION TO WATER HEATERS
EF	120V CONNECTION TO EXHAUST FAN
DAMPER	120V CONNECTION TO MOTORIZED DAMPER
DSD	120V CONNECTION TO FIRE ALARM SYSTEM DUCT MOUNT SMOKE DETECTOR
FSD	120V CONNECTION TO FIRE ALARM SYSTEM FIRE SMOKE DAMPER

2–WAY COMM	2–WAY COMMUNICATION DEVICE, REFER TO DETAIL 4/E6.03
FSD	120V CONNECTION TO FIRE/SMOKE DAMPER
	DOORBELL
	DOORBELL CHIME
T	DOORBELL XFMR
HD	HEAT DETECTOR
FS	SPRINKLER FLOW SWITCH
TS	SPRINKLER VALVE TAMPER SWITCH
HS	FIRE ALARM HORN/STROBE LIGHT
H	FIRE ALARM HORN
S	FIRE ALARM STROBE
MH	MINI HORN
F	FIRE ALARM PULL STATION
CO	CARBON MONOXIDE DETECTOR POWERED BY FIRE ALARM SYSTEM
	ELECTRO–MAGNETIC DOOR HOLDER, POWERED BY FIRE ALARM SYSTEM

A PART OF THE DESIGN/BUILD FIRE ALARM SYSTEM

COUNTY OF SANTA CLARA
BUILDING INSPECTION OFFICE
PLANS APPROVED FOR PERMIT
RECORD NO.: DEV22-1242
BY: rick.gomes Date: 07/28/2023
HARD COPY OF THESE STAMPED PLANS MUST BE ON THE SITE FOR INSPECTIONS

DRAWING INDEX

DWG	DESCRIPTION	100% DD, CONV. 08/05/2022	50% CD, CONV. 09/29/2022	PERMIT SET CONV. 11/11/2022	BID SET 03/02/2023	BID ADDENDUM 03/20/2023	SHEETS WITH REVISIONS
E0.00	GENERAL NOTES, SHEET INDEX, LEGEND, ABBREV.	●	●	●	●	●	
E0.01	LUMINAIRE SCHEDULE	●	●	●	●	●	
E0.02	LUMINAIRE SCHEDULE					●	
E2.01	FIRST FLOOR PLAN – ELECTRICAL	●	●	●	●	●	
E2.02	SECOND FLOOR PLAN – ELECTRICAL	●	●	●	●	●	
E2.03	THIRD FLOOR PLAN – ELECTRICAL	●	●	●	●	●	
E2.04	FOURTH FLOOR PLAN – ELECTRICAL	●	●	●	●	●	
E2.05	ROOF PLAN – ELECTRICAL	●	●	●	●	●	
E3.00	FEEDER PLAN	●	●	●	●	●	
E3.01W	FIRST FLOOR WEST – POWER ENLARGED	●	●	●	●	●	
E3.02E	FIRST FLOOR EAST – POWER ENLARGED	●	●	●	●	●	
E4.01	UNIT PLANS	●	●	●	●	●	
E4.02	UNIT PLANS	●	●	●	●	●	
E4.03	UNIT PLANS	●	●	●	●	●	
E4.04	UNIT PLANS		●	●	●	●	
E4.05	UNIT PLANS		●	●	●	●	
E4.06	UNIT PLANS		●	●	●	●	
E5.00	ONELINE DIAGRAM	●	●	●	●	●	
E5.01	LOAD CALCS, UNIT PANEL & FEEDER SCHEDULES	●	●	●	●	●	
E5

INTERIOR COMMON LUMINAIRE SCHEDULE

CALLOUT	SYMBOL	DESCRIPTION	LAMP	BALLAST	MOUNTING	MODEL	INPUT WATTS	VOLTS	NOTES	OTHER NOTES
A2E		48" X 2-1/8" LED WRAP, 3000K, 4000 LUMENS, DIMMABLE, 1100 LUMEN EMERGENCY BALLAST	(1) 31W LED 3000K	0-10V DIMMING, W/BATTERY	CEILING	PHILIPS: FSS 4 40L 830 UNV DIM EMLED	31	120V 1P 2W	BACK OF HOUSE	
A5E		4' LINEAR LED, VAPOR TIGHT WITH BACKUP BATTERY	(1) 33W 4000K LED	0-10V DIMMING W/BATTERY	CEILING	LITHONIA: VAP-4000LM-FST-WD-MVOLT-GZ10-40K-80CRI-E15WCP	33	120V 1P 2W	FIRE PUMP ROOM	
F01		5" SLIM SURFACE LED DOWNLIGHT, 90 CRI, 3000K, 650LM, WHITE	(1) 11W LED 3000K, 90 CRI	LED DRIVER	CEILING	JUNO: JCSB 5IN 30K 90CRI WH	11	120V 1P 2W	CORRIDOR DOWN LIGHT	
F02		UNIT CORRIDOR ENTRY WALL SCONCE LIGHT, NIGHTSHADE BLACK FINISH	(1) 9W LED 3000K, 90 CRI	0-10V DIMMING	WALL	TECH LIGHTING: 700WSMLY-7-NB-LED930	9	120V 1P 2W	UNIT ENTRY, CORRIDOR; CONFIRM FINISH WITH ARCH	
F03		PUBLIC BATH VANITY LIGHT - SAME AS UNIT BATH VANITY, CHROME	(1) 18W LED 3000K, 94CRI	LED DRIVER	WALL	LITHONIA: FMVCSL 24IN MVOLT 30K 90CRI KR	18	120V 1P 2W	W/C VANITY	JA8 T24 COMPLIANT, F_OS SPEC
F04		UNDERCABINET LIGHTS, 12IN LENGTH, WHITE	(1) 7W LED 3000K	LED DRIVER	UNDERCABINET	LITHONIA: UCLD 12IN 30K 90CRI SWR WH; UCD JB, UC ERC24	7	120V 1P 2W	CONTRACTOR TO ORDER ACCESSORIES AS NEEDED TO LINK	JA8 T24
F11		DECORATIVE LINEAR PENDANT LIGHT, MATTE BLACK, 3" ACRYLIC GLOBE FROSTED, 8' X 2', 9 PORT, WAVE PATTERN, 3000K	(36) 2W LED 2700K	0-10V DIMMING	CLUSTER PENDANT/ SUSPENDED	BLACKJACK LIGHTING: MQ-2409-BL-GLSFR-8L-W-30K	72	120V 1P 2W	LOBBY SEATING AREA; CONFIRM FINISHES AND PATTERN WITH ARCH	2W/90LM PER LIGHT; 96W DRIVER
F12		DECORATIVE LINEAR PENDANT LIGHT, MATTE BLACK, 3" ACRYLIC GLOBE FROSTED, 6' X 2', 9 PORT, STEPPED PATTERN, 3000K	(27) 2W LED 2700K	0-10V DIMMING	CLUSTER PENDANT/ SUSPENDED	BLACKJACK LIGHTING: MQ-2409-BL-GLSFR-6L-S-30K	54	120V 1P 2W	LOBBY MAIL ZONE; CONFIRM FINISHES AND PATTERN WITH ARCH	2W/90LM PER LIGHT; 60W DRIVER
F13		DECORATIVE PENDANT LOBBY NOOK, GLASS/ BLACK / WHITE	(1) 11W E26 MEDIUM BASE, LED 2700K, 90 CRI	ELV DIMMING	PENDANT	TECH LIGHTING: 700 TD SIG YL LED927	11	120V 1P 2W	LOBBY NOOK, WITH T24 APPROVED A19 LED LAMP	
2 F14		FAIRY LIGHTS, ART PIECE LIGHTING, DIMMABLE WITH PWM DRIVER, CONFIRM MODEL# WITH ARCH	(1) 6.5W LED 2200K	VIA 24 V DIMMING DRIVER	CLUSTER PENDANT/ STRING LIGHT SUSPENDED	FIREFLY: FIRICWW5M23DWG2?	6.5	120V 1P 2W	STAIR - CENTRAL CENTER ART PIECE	
F15		LED WALL/CEILING LIGHT, 3000K, 90CRI, 0-10V DIMMING, INTEGRAL OCCUPANCY SENSOR, EMERGENCY BATTERY	(1) 37.8W LED 3000K, 90CRI	0-10V DIM W/ BATTERY	WALL/CEILING	PRUDENTIAL LTG: BOLT-PRO-LED3-90-SO-4-SAL-XXX-UNV-SUR-X3-ECO-EMHE-JA8-205-DM	37.8	120V 1P 2W	STAIR - LANDINGS, BUILT IN OCCUPANCY SENSOR, BUILT IN EMERGENCY BALLAST, FIXTURE TO DIM TO 50% WHEN UNOCCUPIED.	
F16		FLAT PANEL, ACOUSTIC TILE COMPATIBLE LIGHT, T-BAR, WHITE	(1) 33W LED 3000K, 80CRI	LED DRIVER	T-BAR	LITHONIA: EPANL-2X2-4000LMHE-80CRI-30K-MIN1-EZT-MVOLT-DGA22 / 2X2SMKSH	33	120V 1P 2W	OFFICES; CONFIRM MOUNTING AND FINISH WITH ARCH.	
F17		DIRECT LINEAR LIGHT, 8' LENGTH, FINISH BY ARCH	(1) 80W LED 3000K, 90CRI	0-10V DIMMING	CEILING	STARTEK LIGHTING: BEAMDI-8-750-WD-30K-90-XX-XXXX-U-1C	80	120V 1P 2W	COMMUNITY ROOM, CONFIRM FINISH WITH ARCH.	
F18		DECORATIVE PENDANT AT COMMUNITY KITCHEN, NIGHTSHADE BLACK	(1) 12.5W LED 3000K, 90CRI	ELV DIMMING	PENDANT	TECH LIGHTING: 700-TD-KAI1-B-LED930	12.5	120V 1P 2W	COMMUNITY KITCHEN; CONFIRM FINISH WITH ARCH, S.A.D. FOR MOUNTING DETAILS	
F20		BETACALCO RING LIGHT, 36" CEILING MOUNT, 0-10V DIMMING	(1) 26W LED 3000K, 90CRI	0-10V LED DIMMING	CEILING	BETACALCO: 954210-30K-D10-XX	26	120V 1P 2W	BRIDGE, CONFIRM FINISH WITH ARCH.	
O01		4' LINEAR LED, VAPOR TIGHT	(1) 42W 4000K LED	0-10V DIMMING	CEILING	LITHONIA: VAP-4000LM-FST-WD-MVOLT-GZ10-40K-80CRI	42	120V 1P 2W	ELEV PIT	
P01		AOK SERIES, 8' LINEAR PARKING GARAGE LIGHTS LINEAR FIXTURE, INTEGRAL OS TO DIM TO 50% WHEN UNOCCUPIED, INTEGRAL EM BATTERY	(1) 65W LED 3500K, 83CRI	0-10V DIMMING W/ BATTERY	CEILING	FSC: LINEAR: L285-96-65W--AOK-S5-PRGOS-LR-EM10WT20	65	120V 1P 2W	PARKING GARAGE. FIXTURE TO BE MOUNTED NO HIGHER THAN 10-FT TO BOTTOM OF FIXTURE. SUSPEND FIXTURE WITH CABLE AS NEEDED.	
P02		UTILITY LIGHT 3900 LUMENS DIMMABLE, 4' LONG, BACKUP BATTERY, WHITE	(1) 35.4W LED, 3000K	STEP DIMMING	CEILING	LITHONIA: CLX L48 5000LM SEF FDL MVOLT GZ10 30K 80CRI	35.4	120V 1P 2W	ELEC/MECH/BIKE/PARCEL	
X1		LED EXIT SIGN, SINGLE OR DOUBLE SIDED, UNIVERSAL MOUNT, RED LETTERING, WHITE HOUSING	(1) 2W LED	ELEC W/BATTERY	WALL/CEILING	MAXILUME ELX-605-R-W-W	2	120V 1P 2W	EXIT SIGNS, BACKUP BATTERY BALLAST PROVIDES SECONDARY POWER SOURCE	
X2		EXTERIOR RATED LED EXIT SIGN, SINGLE OR DOUBLE SIDED, UNIVERSAL MOUNT, RED LETTERING, WHITE HOUSING	(1) 2W LED	BATTERY	WALL	MAXILUME ELX-651-R-W-EM	2	120V 1P 2W	UNIVERSAL KNOCK-OUTS FOR DIRECTIONAL MARKERS. BACKUP BATTERY BALLAST PROVIDES SECONDARY POWER SOURCE. SINGLE SHADED OR DOUBLE SHADED QUADRANTS SHOWN ONPLANS DEPICT THE PATH OF EGRESS DIRECTION.	
X3		LED EMERGENCY BUGEYE LIGHT	(1) 1.44W LED	BATTERY	WALL	LITHONIA ELM4L	1.44	120V 1P 2W	EMERGENCY BUGEYE. IF FIXTURE IS SUBSTITUTED, MANUFACTURER MUST PROVIDE DOCUMENTATION THAT MINIMUM EGRESS LEVELS CAN BE MAINTAINED WITH A SET SPACING.	

TYPE OF ROOM	TYPE OF CONTROL	CONTROLLER FUNCTIONALITY	OTHER NOTES
ENCLOSED ROOMS, BACK OF HOUSE (STORAGE ROOMS, MAINTENANCE, BIKE ROOM, BREAK ROOM, TRASH, LAUNDRY, ETC).	OCCUPANCY SENSORS, MANUAL CONTROLS, DIMMER (IF APPLICABLE)	MANUAL ON, AUTO OFF AFTER 20 MIN.	
ENCLOSED ROOMS, AMENITY OF HOUSE (MEETING, CONFERENCE, LOUNGES, DINING, FITNESS).	OCCUPANCY SENSORS, DIMMERS, PHOTOCELLS (IF APPLICABLE)	MANUAL ON, AUTO OFF AFTER 20 MIN. DELAY. PHOTOCELL TO DIM GENERAL LIGHTING WHEN DAYLIGHT PRESENT.	
ELECTRICAL, MECHANICAL, AND ELEVATOR CONTROL ROOMS	MANUAL CONTROLS ONLY	MANUAL ON, MANUAL OFF. OCCUPANCY SENSORS PROHIBITED	
SINGLE STALL RESTROOMS	OCCUPANCY SENSORS, MANUAL CONTROLS, DIMMER (IF APPLICABLE)	MANUAL ON, AUTO OFF AFTER 20 MIN.	
MULTI STALL RESTROOMS	OCCUPANCY SENSORS, MANUAL CONTROLS, DIMMER (IF APPLICABLE)	AUTO/MANUAL ON, AUTO OFF AFTER 20 MIN. KEYED SWITCH ALLOWED.	
ELEVATOR LOBBIES	MANUAL SHUTOFF CONTROL.	LIGHTING ON 24/7 AT FULL BRIGHTNESS, MANUAL SWITCH IS FOR MAINTENANCE ONLY 130.1(a)(2).	
CORRIDORS	OCCUPANCY SENSORS, MANUAL SHUTOFF CONTROL.	AUTO ON, AUTO DIM TO 50% AFTER 20 MIN. DELAY. ZONED AS DESCRIBED ON LIGHTING PLANS. MANUAL CONTROL IS ONLY FOR MAINTENANCE 130.1(a)(2), LOCATED ACCESSIBLE TO AUTHORIZED PERSONNEL ONLY.	
STAIRS, INTERIOR, ENCLOSED	OCCUPANCY SENSORS, MANUAL SHUTOFF CONTROL.	AUTO ON, AUTO DIM TO 50% AFTER 20 MIN. DELAY. MANUAL CONTROL IS ONLY FOR MAINTENANCE 130.1(a)(2), LOCATED ACCESSIBLE TO AUTHORIZED PERSONNEL ONLY.	
PARKING GARAGE (MORE THAN 1 STALL)	OCCUPANCY SENSORS, MANUAL SHUTOFF CONTROL.	AUTO ON, AUTO DIM TO 50% AFTER 20 MIN. DELAY. MANUAL CONTROL IS ONLY FOR MAINTENANCE 130.1(a)(2), LOCATED ACCESSIBLE TO AUTHORIZED PERSONNEL ONLY.	
ENTRY LOBBY	MANUAL SHUTOFF CONTROL. OCCUPANCY SENSOR EXEMPT PER 160.5(b)4Ci	MANUAL CONTROL IS ONLY FOR MAINTENANCE 130.1(a)(2), LOCATED ACCESSIBLE TO AUTHORIZED PERSONNEL ONLY.	

1. DAYLIGHT HARVESTING PER TITLE 24 ENERGY CODE 130.1(d)
2. IF EMERGENCY IS PROVIDED, PROVIDE UL 924 DEVICE TO RAMP LIGHTING TO FULL BRIGHTNESS IN A POWER OUTAGE EVENT.
3. FOR DIGITAL LIGHTING CONTROL SYSTEMS, REFER TO DETAIL 1/E6.03

2

COUNTY OF SANTA CLARA
BUILDING INSPECTION OFFICE
PLANS APPROVED FOR PERMIT
RECORD NO.: DEV22-1242
BY: rick.gomes Date: 07/28/2023
HARD COPY OF THESE STAMPED PLANS MUST BE ON THE SITE FOR INSPECTIONS

VAN METER WILLIAMS POLLACK LLP
ARCHITECTURE | URBAN DESIGN ■ SAN FRANCISCO | DENVER | MINNEAPOLIS
333 Bryant Street, Suite 300, San Francisco, CA 94107 T 415.974.5352

CIVIL ENGINEER
BKF ENGINEERS
1730 N. FIRST ST SUITE 600
SAN JOSE, CA 95112

JOINT TRENCH / DRY UTILITIES
MILLENIUM DESIGN
PO BOX 737
ALAMO, CA 94507

LANDSCAPE ARCHITECT
PLURAL STUDIO
2742 17TH STREET
SAN FRANCISCO, CA 94110

STRUCTURAL ENGINEER
HOHBACH-LEWIN, INC
250 SHERIDAN AVE STE 100
PALO ALTO, CA 94306

MEP ENGINEER
EMERALD CITY ENGINEERS
21705 HIGHWAY 99
LYNWOOD, WA 98036

ENERGY CONSULTANT
REDWOOD ENERGY
1887 Q STREET
ARCATA, CA 95521

EMERALD CITY ENGINEERS, INC
21705 Highway 99
Lynnwood, WA 98036
TEL: 425-741-1200

REGISTERED PROFESSIONAL ENGINEER
ADAM C. FRICKE
EXP. 3-31-25
ELECTRICAL
STATE OF CALIFORNIA

03-20-23

ID	DATE	NAME
1	11/11/2022	PERMIT CONVENTIONAL
A	12/16/2022	BID SET
B	03/20/2023	BID ADDENDUM
2	03/20/2023	PLAN CHECK RESPONSE 2

Project:

EDUCATOR HOUSING
231 GRANT AVENUE

231 GRANT AVENUE
PALO ALTO, CA 94306

Client:
MERCY HOUSING/
ABODE COMMUNITIES

LUMINAIRE SCHEDULE

JOB #: 2293-007
SCALE: AS NOTED

E0.01

PLAN CHECK RESPONSE 2 | DATE: 03/20/2023

COPYRIGHT 2023, EMERALD CITY ENGINEERS, INC.
K:\LAYTON J\2293-007 231 GRANT, PALO ALTO, CA\DWG\E001 LUMINAIRE SCHEDULE.DWG 03-17-2023 11:48

EXTERIOR LUMINAIRE SCHEDULE

CALLOUT	SYMBOL	DESCRIPTION	LAMP	BALLAST	MOUNTING	MODEL	INPUT VA	VOLTS	NOTE 1	OTHER NOTES
E1		EXTERIOR WALL LIGHT AT DOORS, BLACK / BRONZE, CRI 90	(1) 26.2W LED 3000K	ELV DIMMING	WALL	TECH LIGTHING: 700WSPIT-S-B/Z-LED830	26.2	120V 1P 2W	EXTERIOR DOORS, COMMUNITY ROOM, OFFICE, FLEX. ARCH TO CONFIRM FINISH.	B1-U0-G0
E2		PODIUM OVERHANG DOWNLIGHT, WET LOCATION, PODIUM OVERHANG	(1) 12W LED 3000K, 90 CRI	UNV DIMMING	CEILING	GOTHAM: ICO2SC-30-10-AR-LD-45D-MVOLT-UGZ-90CRI-WL-FINISH	12	120V 1P 2W	COMMUNITY ROOM CANOPY, CONFIRM MOUNTING, ARCH TO CONFIRM FINISH	JA8 TZ4 2019 COMPLIANT
E4		WALL LIGHTS BEHIND GARAGE, BLACK OR BRONZE, W/ 15W EMERGENCY BATTERY BACKUP	(1) 23W LED 3000K, 80CRI	0-10V LED DIM W/ EM BATTERY	CEILING	LITHONIA: WEDG2 LED P3 30K 80CRI VW MVOLT SRM DMG E10WH DDBTXD	23	120V 1P 2W	GARAGE SETBACK	B1, U0, G1
L1		LED FLORACION MOUNT POLE LIGHT, BLACK, ARCH/LAND TO CONFIRM NUMBER OF HEADS	(2) 23W LED 3000K 80CRI	0-10V LED DIMMING	POLE	SELUX OLML F40 FX 2G525 30 BK UNV DS DM	46	120V 1P 2W	FRONT ENTRY; ARCH TO CONFIRM FINISH.	
L4		LINEAR LED STRIP LIGHT RUBBER COATED IP67 OUTDOOR RATED	(1) 3W LED 3000K, 80 CRI	0-10V LED DIMMING	BENCHES	KELVIX DIRECT VIEW 200	3	120V 1P 2W	STREET LEVEL BENCHES	3W PER FT
L5		VANDAL RESISTANT RECTANGULAR WALL RECESSED ACCENT LIGHT, IP65, IK07, STAINLESS FRAME AND FINISH, SURFACE MOUNTED BOX.	(1) 11W LED 2700K, 80 CRI	0-10V LED DIMMING	WALL	LIGMAN LIGHTING: ULE-40721-11W-S-W27-SS-120V-DIM-SMB	11	120V 1P 2W	COURTYARD; CONFIRM WITH LANDSCAPE DETAILS FOR MOUNTING; CONFIRM FINISH WITH ARCH.	B0-U3-G1
L6		LED CATENARY LIGHT, JET BLACK	(1) 10W LED 3000K, 80 CRI	0-10V LED DIMMING	CATENARY	LUMINIS LUMISTIK CL312-L56W10-120-XXX-CAT3-K3	10	120V 1P 2W	COURTYARD; ARCH TO CONFIRM FINISH	
L7		BOLLARD LIGHT WITH 13" HIGH IMPACT DIFFUSER, JET BLACK	(1) 20W LED 3000K, 80 CRI	0-10V LED DIMMING	BOLLARD	LUMINIS LQ413-L4L40-120-XXX-K3	20	120V 1P 2W	COURTYARD; ARCH TO CONFIRM FINISH	
L8		BOLLARD LIGHT WITH 25" HIGH IMPACT DIFFUSER, BLACK	(1) 40W LED 3000K, 80 CRI	0-10V LED DIMMING	BOLLARD	LUMINIS LQ423-L4L40-120-XXX-K3	40	120V 1P 2W	COURTYARD; ARCH TO CONFIRM FINISH	
L9		BBQ TASK LIGHT, STAINLESS STEEL	(1) 7W GU5.3 LED 3000K	LED DRIVER	BBQ COUNTER	FOCUS INDUSTRIES: BQ-FD03L134SS	7	120V 1P 2W	COURTYARD	
L10		WALL MOUNT AREA LIGHT, BLACK	(1) 39W LED 3000K, 80 CRI	0-10V LED DIMMING	WALL	SELUX U4-R4-W-5G700-30-XX-XX-UNV-DM	39	120V 1P 2W	COURTYARD	
L11		EXTRUDED ALUMINUM MOUNTING CHANNEL WITH LINEAR LED STRIP LIGHT RUBBER COATED IP67 OUTDOOR RATED	(1) 4.3W LED 3000K, 80 CRI	0-10V LED DIMMING	BENCHES	KELVIX: CH-016-X-XXX-CP-EC; KELVIX DIRECT VIEW 400	4.3	120V 1P 2W	COURTYARD BENCHES; CONFIRM FINISH WITH ARCH	4.3W PER FT

UNITS LUMINAIRE SCHEDULE

CALLOUT	SYMBOL	DESCRIPTION	LAMP	BALLAST	MOUNTING	MODEL	INPUT WATTS	VOLTS	NOTES	OTHER NOTES
U1A		TRACK LIGHTING, BLACK, 6 FT/8 FT/12 FT	(1) 13.2W LED 3000K, 90CRI	LED DIMMING	CEILING	JUNO: T-6FT-BL	13.2	120V 1P 2W	UNIT LIVING & KITCHEN	JA8 T24 COMPLIANT, NEED EXTENDERS
U1B		TRACK LIGHTING, CYLINDER LIGHT, BLACK, CONFIRM FINISHES WITH ARCH	(1) 21W LED 3000K, 90CRI	LED STEP DIMMING	TRACK	JUNO: R610L-30K-90CRI-PDIM-FL-BL	21	120V 1P 2W	UNIT LIVING & KITCHEN; CONFIRM FINISH AND ACCESORIES WITH ARCH	90 CRI, FLOOD, T24 COMPLIANT
U2		BRUMMEL GRANDE PENDANT LIGHT, BLACK FINISH, T24 COMPLIANT A21 LAMP INCLUDED	(1) 19W LED 2700K 90CRI	ELV DIMMING	PENDANT	TECH LIGHTING: 700-TD-BMLGP-Y-B-LED927	100	120V 1P 2W	UNIT DINING/BEDROOM	JA8 T24 COMPLIANT
U3		SQUARE LED SURFACE MOUNT LIGHT, WHITE	(1) 13.2W LED 3000K, 90CRI	LED DIMMING	CEILING	JUNO SLIMBASICS: JCSB 5IN 30K 90CRI	13.2	120V 1P 2W	UNIT DOWNLIGHT	JA8 T24 COMPLIANT, 90 CRI
U4		LED 24" WALL SURFACE MOUNT VANITY, CHROME	(1) 18W LED 3000K 90CRI	LED DRIVER	WALL	LITHONIA: FMVCSL 24IN MVOLT 30K 90CRI KR	18	120V 1P 2W	UNIT BATHROOM VANITY LIGHT	JA8 T24 COMPLIANT, F_OS SPEC
U5		FAN/LIGHT COMBO WITH MULTISPEED CONTROLLER AND CONDENSATION SENSOR, LED LIGHT	(1) 10W LED 3000K	LED DIMMING	CEILING	PANASONIC FV-0511VKSL2, FV-CSVK1	10	120V 1P 2W	UNIT BATHROOMS, FAN HAS 2 SPEEDS, CONTINUOUS LOW SETTING, AND HIGH SETTING ACTIVATED BY WALL OCCUPANCY SENSOR SWITCH AND CONDENSATION SENSOR. LIGHT SWITCH CONTROLLED BY WALL VACANCY SWITCH.	
U6		EXTERIOR WALL LIGHT AT DOORS, BLACK / BRONZE, CRI 90	(1) 26.2W LED 3000K	ELV DIMMING	WALL	TECH LIGTHING: 700WSPIT-S-B/Z-LED830	26.2	120V 1P 2W	UNIT, EXTERIOR PATIO LIGHT, ARCH TO CONFIRM FINISH.	B1-U0-G0
U7		LED SURFACE MOUNT CIRCULAR LIGHT 9", DIMMING, T24 COMPLIANT, TITANIUM	(1) 16.5W LED 3000K 90CRI	DIMMING	PENDANT	MODERN FORMS: FM-2109-30-TT	16.5	120V 1P 2W	UNIT DINING/BEDROOM	JA8 T24 COMPLIANT
U8		UNDERCABINET LIGHTS AT SITE BUILT UNITS, 12IN LENGTH, WHITE	(1) 7.3W LED 3000K	LED DRIVER	UNDERCABINET	LITHONIA: UCLD 12IN 30K 90CRI SWR WH; UCD JB, UC ERC24	7.3	120V 1P 2W	UNIT KITCHEN; CONTRACTOR TO ORDER ACCESSORIES AS NEEDED TO LINK	JA8 T24

CA TITLE 24 2019 – RESIDENTIAL LIGHTING

- ALL IN-UNIT FIXTURES TO BE HIGH EFFICACY.
- ALL INSEPERABLE LED'S TO BE JA8 APPENDIX APPROVED.
- ALL MEDIUM BASED + GU24 LED LAMPS TO BE JA8-2016-E APPROVED (WITH MARKINGS)
- ALL RECESSED DOWNLIGHTS TO BE JA8 APPENDIX APPROVED
- DOCUMENTATION FOR THE ABOVE JA8 + JA8-2016-E REQUIREMENTS SHALL BE PROVIDED DURING SUBMITTAL PROCESS.
- ALL FORWARD PHASE CUT DIMMERS USED WITH LED SHALL COMPLY WITH NEMA SSL 7A

COPYRIGHT 2023, EMERALD CITY ENGINEERS, INC.
M:\LATTON J:\2293-007 231 GRANT, PALO ALTO, CA\DWG\E002 LUMINAIRE SCHEDULE.DWG 03-17-2023 11:48

VAN METER WILLIAMS POLLACK LLP
ARCHITECTURE | URBAN DESIGN ■ SAN FRANCISCO | DENVER | MINNEAPOLIS
333 Bryant Street, Suite 300, San Francisco, CA 94107 T 415.974.5252

CIVIL ENGINEER
BKF ENGINEERS
1730 N. FIRST ST SUITE 600
SAN JOSE, CA 95112

JOINT TRENCH / DRY UTILITIES
MILLENIUM DESIGN
PO BOX 737
ALAMO, CA 94507

LANDSCAPE ARCHITECT
PLURAL STUDIO
2742 17TH STREET
SAN FRANCISCO, CA 94110

STRUCTURAL ENGINEER
HOHBACH-LEWIN, INC
250 SHERIDAN AVE STE 100
PALO ALTO, CA 94306

MEP ENGINEER
EMERALD CITY ENGINEERS
21705 HIGHWAY 99
LYNWOOD, WA 98036

ENERGY CONSULTANT
REDWOOD ENERGY
1887 Q STREET
ARCATA, CA 95521

EMERALD CITY ENGINEERS, INC
21705 Highway 99
Lynnwood, WA 98036
TEL: 425-741-1200

REGISTERED PROFESSIONAL ENGINEER
ADAM C. FRENCH
E19421C
EXP. 3-31-24
ELECTRICAL
STATE OF CALIFORNIA
03-20-23

COUNTY OF SANTA CLARA
BUILDING INSPECTION OFFICE
PLANS APPROVED FOR PERMIT

RECORD NO.: DEV22-1242

BY: rick.gomes Date: 07/28/2023

HARD COPY OF THESE STAMPED PLANS MUST BE ON THE SITE FOR INSPECTIONS

ID	DATE	NAME
1	11/11/2022	PERMIT CONVENTIONAL
A	12/16/2022	BID SET
B	03/20/2023	BID ADDENDUM
2	03/20/2023	PLAN CHECK RESPONSE 2

Project:

EDUCATOR HOUSING
231 GRANT AVENUE

231 GRANT AVENUE
PALO ALTO, CA 94306

Client:

MERCY HOUSING/
ABODE COMMUNITIES

LUMINAIRE SCHEDULE

JOB #: 2293-007
SCALE: AS NOTED

E0.02

PLAN CHECK RESPONSE 2 | DATE: 03/20/2023

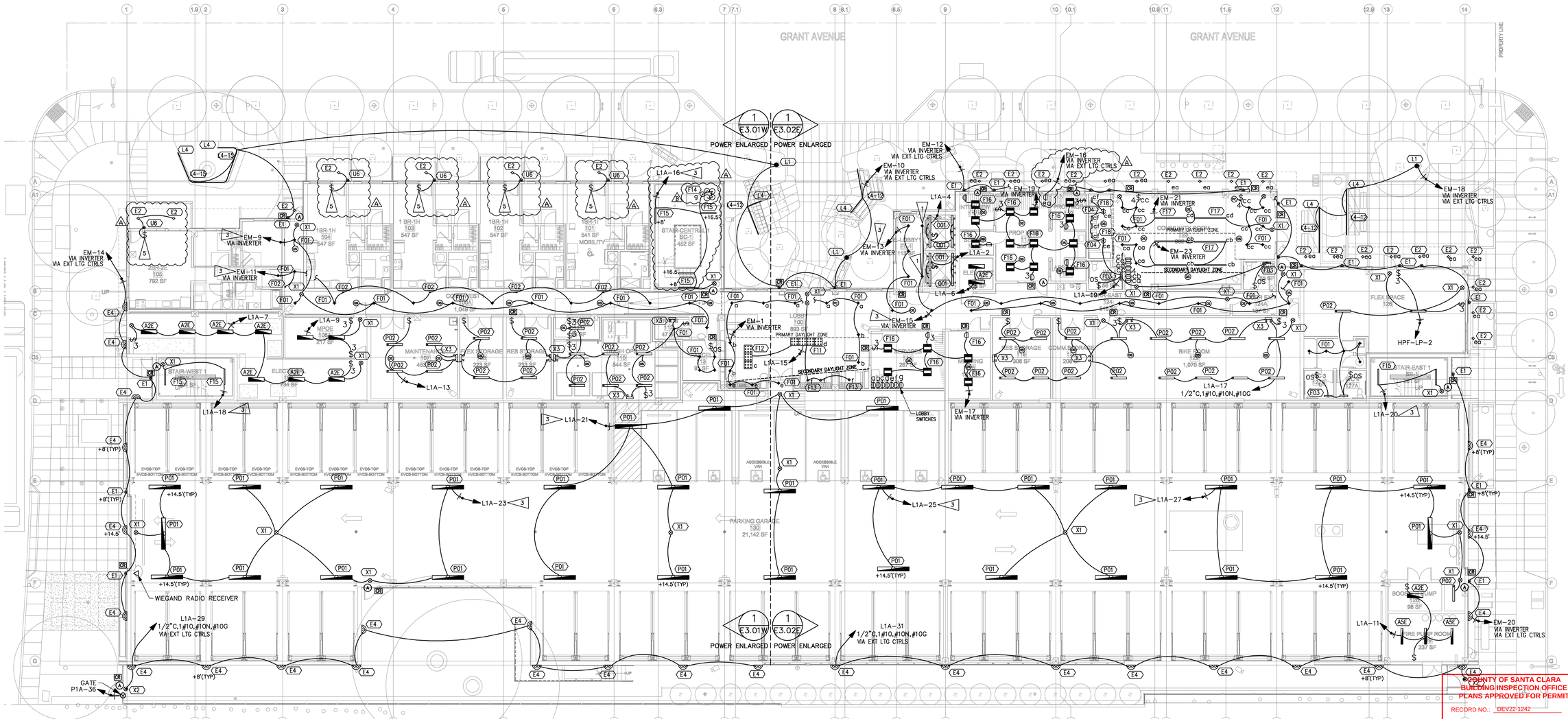

LIGHTING

FIRST FLOOR (1 / E2.01)

SCALE: 3/32" = 1'-0"

FLAG NOTES	
1	ELEVATOR LOBBY LIGHTING TO REMAIN CONTINUOUSLY ON 24 HOURS A DAY. LIGHTING NOT TO BE CONTROLLED BY CORRIDOR OCCUPANCY SENSORS.
2	MULTI-LEVEL DIMMING NOT REQUIRED PER CEC 130.1(b). ROOM IS LESS THAN 0.5 W/SF OR LESS THAN 100 SF.
3	T24: PROVIDE MANUAL SWITCH WITH ANNUNCIATING MEANS FOR LIGHTING CIRCUITS IN STAIRS, PARKING GARAGES, PUBLIC RESTROOMS, AND CORRIDORS (SEE PLANS FOR SPECIFIC CIRCUITRY). LOCATE SWITCH WITHIN CLOSE VICINITY TO THE PANEL FEEDING THE LIGHTING CIRCUIT. SWITCHES MAY BE NOT ACCESSIBLE TO UNAUTHORIZED PERSONNEL PER CEC 130.1(a)(2) (EXCEPTION 2). PROVIDE PERMANENT LABELS ANNOTATING AREA THE SWITCH CONTROLS. SWITCHES TO BE ILLUMINATING, LEVITON 5631-2W.
4	DAYLIGHT ZONE PHOTOCELL NOT REQUIRED PER CEC EXCEPTION 1 TO SECTION 130.1(D)2. DAYLIGHT ZONE IS LESS THAN 120 WATTS.
5	UNIT PORCH LIGHTING/POWER TO BE CIRCUITED TO CORRESPONDING UNIT PANEL. REFER TO UNIT PLANS FOR SWITCH LOCATIONS.
6	PROVIDE "THERMOSTAT" STYLE PLASTIC LOCKING COVER TO PROTECT DIMMER SWITCHES.
7	PROVIDE A REMOTE CALL STATION FOR RESCUE ASSISTANCE 2-WAY COMMUNICATION DEVICE. REFER TO DETAIL 2/E6.01 FOR WIRING DIAGRAM.
8	SEPARATE WIFI PROVIDED IN COMMON AREAS FOR STAFF AND TENANTS
9	CONFIRM VOLTAGE/PHASE REQUIREMENTS WITH SUBMITTAL PRIOR TO INSTALLATION.

SHEET NOTES
1. CORRIDORS T24: TO MEET CEC 130.1(C)(7)A, LIGHTING REDUCTION IN CORRIDORS, DIM CORRIDORS TO 50% WHEN UNOCCUPIED. ZONE OCCUPANCY SENSOR DEVICES ON EACH SIDE OF FIREWALL TOGETHER. PROVIDE SEPARATE RELAY FOR EMERGENCY/NONEMERGENCY AND CONFIRM ALL DIMMING TYPES, PROVIDE NECESSARY COMPONENTS FOR A FULL SYSTEM.
2. EMERGENCY: ALL EMERGENCY WIRING MUST BE KEPT INDEPENDENT FROM ALL OTHER WIRING, PER NEC 700.10(B)
3. LOBBY LIGHTING TO BE ON 24/7.
4. SUSPEND LIGHTS AND EXIT SIGNS IN ALL AREAS OVER 10FT, THIS INCLUDES GARAGE, BACK OF HOUSE, 2-STORY TALL AMENITY/LOBBIES, ETC. SUSPEND OTHER UTILITIES IN BOH AND GARAGE AREAS.
5. PROVIDE AN UNSWITCHED HOT TO ALL BATTERY BALLASTS, EMERGENCY FIXTURES, AND EXIT SIGNS FROM DESIGNATED CIRCUIT.
6. EACH EXIT SIGN TO HAVE JUNCTION BOX INSTALLED NEXT TO FIXTURE TO PREVENT EXIT SIGNS FROM BEING USED AS A JUNCTION BOX FOR OTHER LIGHTS PER CEC 700.10(B).
7. T24: EXTERIOR LIGHTING TO BE CONTROLLED VIA LIGHTING CONTROLS WITH ASTRONOMICAL TIMECLOCK (REF DETAILS). FIXTURES OVER 30W TO BE CONTROLLED BY OCCUPANCY SENSOR, DIM TO 50% WHEN UNOCCUPIED.
8. DEMAND RESPONSE CONTROLS ARE NOT REQUIRED SINCE THE BUILDING HAS LESS THAN 10,000 SF OF SPACE OVER .5 W/SF.
9. STAIRWELL T24: TO MEET CEC 130.1(C)(7)A, LIGHTING REDUCTION IN STAIRWELLS, DIM STAIRWELLS TO 50% WHEN UNOCCUPIED THROUGH INTEGRAL OCCUPANCY SENSORS.
10. GARAGE T24 TO MEET CEC 130.1(C)(7)B, LIGHTING REDUCTION IN GARAGE, DIM GARAGE FIXTURES TO 50% WHEN UNOCCUPIED THROUGH INTEGRAL OCCUPANCY SENSORS.
11. T24: PROVIDE PHOTOCELL TO DIM/CONTROL LIGHT FIXTURES WITHIN DAYLIGHT ZONES AS REQUIRED BY T24. ZONES CONTAINING LESS THAN 120 WATTS ARE NOT REQUIRED TO HAVE A PHOTOCELL.

LOW VOLTAGE SYSTEMS SHEET LEGEND:	
KR	KEY CARD READER ACCESS FOB SEE ARCH BACKGROUNDS FOR LOCATIONS
	CCTV SECURITY CAMERA SEE ARCH BACKGROUNDS FOR LOCATIONS
A	DOOR DETECTOR BUZZER IF PROPPED OPEN. SEE ARCH BACKGROUNDS FOR LOCATIONS

COPYRIGHT 2023, EMERALD CITY ENGINEERS, INC.
K:\LAYTON J\2293-007 231 GRANT, PALO ALTO, CA\DWG\E201 FIRST FLOOR PLAN - ELECTRICAL.DWG 03-17-2023 11:47

VAN METER WILLIAMS POLLACK LLP
ARCHITECTURE | URBAN DESIGN ■ SAN FRANCISCO | DENVER | MINNEAPOLIS
333 Bryant Street, Suite 300, San Francisco, CA 94107 T 415.974.5252

CIVIL ENGINEER
BKF ENGINEERS
1730 N. FIRST ST SUITE 600
SAN JOSE, CA 95112

JOINT TRENCH / DRY UTILITIES
MILLENIUM DESIGN
PO BOX 737
ALAMO, CA 94507

LANDSCAPE ARCHITECT
PLURAL STUDIO
2742 17TH STREET
SAN FRANCISCO, CA 94110

STRUCTURAL ENGINEER
HOHBACH-LEWIN, INC
250 SHERIDAN AVE STE 100
PALO ALTO, CA 94306

MEP ENGINEER
EMERALD CITY ENGINEERS
21705 HIGHWAY 99
LYNWOOD, WA 98036

ENERGY CONSULTANT
REDWOOD ENERGY
1887 G STREET
ARCATA, CA 95521

EMERALD CITY ENGINEERS, INC
21705 Highway 99
Lynnwood, WA 98036
TEL: 425-741-1200

REGISTERED PROFESSIONAL ENGINEER
MARK C. FRENCH
EXP. 3-31-25
ELECTRICAL
STATE OF CALIFORNIA

03-20-23

COUNTY OF SANTA CLARA
BUILDING INSPECTION OFFICE
PLANS APPROVED FOR PERMIT
RECORD NO.: DEV22-1242
BY: nick.gomes Date: 07/28/2023
HARD COPY OF THESE STAMPED PLANS MUST BE ON THE SITE FOR INSPECTIONS

ID	DATE	NAME
1	11/11/2022	PERMIT CONVENTIONAL
A	12/16/2022	BID SET
B	03/20/2023	BID ADDENDUM
2	03/20/2023	PLAN CHECK RESPONSE 2

Project:

EDUCATOR HOUSING
231 GRANT AVENUE

231 GRANT AVENUE
PALO ALTO, CA 94306

Client:
MERCY HOUSING/
ABODE COMMUNITIES

FIRST FLOOR PLAN - ELECTRICAL

JOB #: 2293-007
SCALE: AS NOTED

E2.01

PLAN CHECK RESPONSE 2 | DATE: 03/20/2023

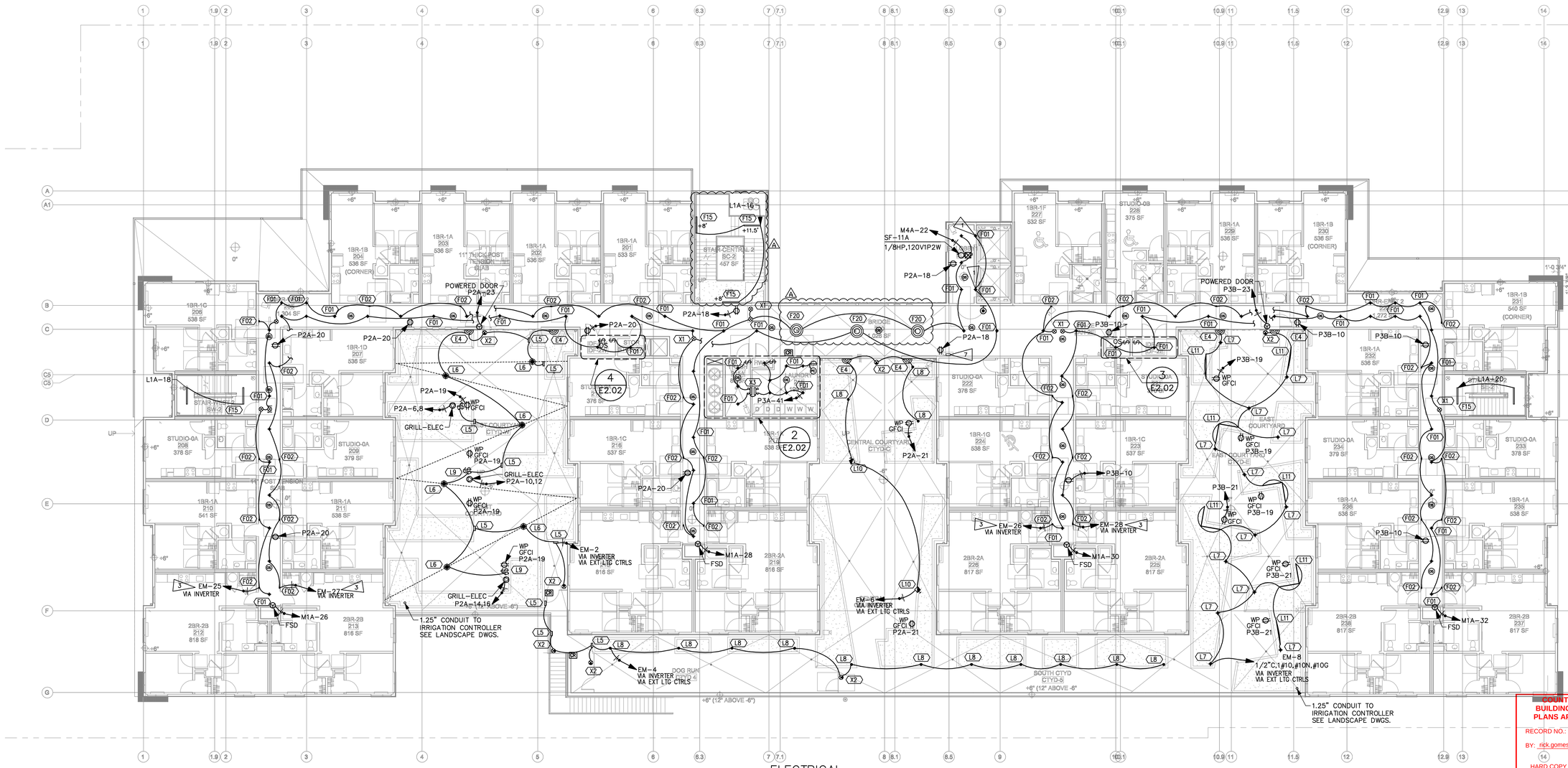

ELECTRICAL

SECOND FLOOR 1 E2.02

SCALE: 3/32" = 1'-0"

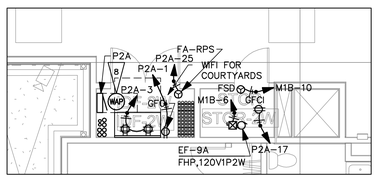

POWER ENLARGED

IDF CLOSET 4 E2.02

SCALE: 3/16" = 1'-0"

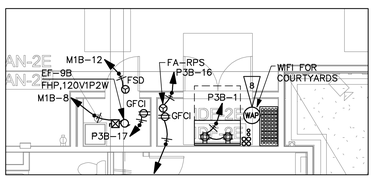

POWER ENLARGED

IDF CLOSET 3 E2.02

SCALE: 3/16" = 1'-0"

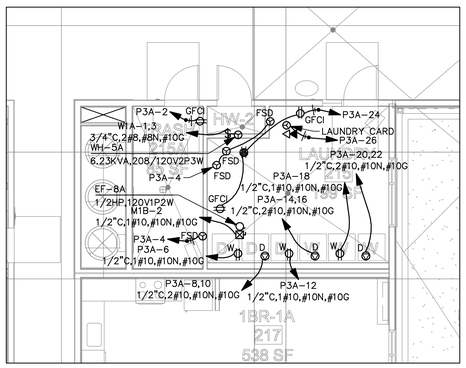

POWER ENLARGED

LAUNDRY ROOM 2 E2.02

SCALE: 3/16" = 1'-0"

FLAG NOTES

1. ELEVATOR LOBBY LIGHTING TO REMAIN CONTINUOUSLY ON 24 HOURS A DAY. LIGHTING NOT TO BE CONTROLLED BY CORRIDOR OCCUPANCY SENSORS.
2. MULTI-LEVEL DIMMING NOT REQUIRED PER CEC 130.1(b). ROOM IS LESS THAN 0.5 W/SF OR LESS THAN 100 SF.
3. T24: PROVIDE MANUAL SWITCH WITH ANNUNCIATING MEANS FOR LIGHTING CIRCUITS IN STAIRS, PARKING GARAGES, PUBLIC RESTROOMS, AND CORRIDORS (SEE PLANS FOR SPECIFIC CIRCUITRY). LOCATE SWITCH WITHIN CLOSE VICINITY TO THE PANEL FEEDING THE LIGHTING CIRCUIT. SWITCHES MAY BE NOT ACCESSIBLE TO UNAUTHORIZED PERSONNEL PER CEC 130.1(a)(2) (EXCEPTION 2). PROVIDE PERMANENT LABELS ANNOTATING AREA THE SWITCH CONTROLS. SWITCHES TO BE ILLUMINATING, LEVITON 5631-2W.
4. DAYLIGHT ZONE PHOTOCELL NOT REQUIRED PER CEC EXCEPTION 1 TO SECTION 130.1(D)2. DAYLIGHT ZONE IS LESS THAN 120 WATTS.
5. UNIT PORCH LIGHTING/POWER TO BE CIRCUITED TO CORRESPONDING UNIT PANEL. REFER TO UNIT PLANS FOR SWITCH LOCATIONS.
6. PROVIDE "THERMOSTAT" STYLE PLASTIC LOCKING COVER TO PROTECT DIMMER SWITCHES.
7. PROVIDE A REMOTE CALL STATION FOR RESCUE ASSISTANCE 2-WAY COMMUNICATION DEVICE. REFER TO DETAIL 2/E6.01 FOR WIRING DIAGRAM.
8. SEPARATE WIFI PROVIDED IN COMMON AREAS FOR STAFF AND TENANTS
9. CONFIRM VOLTAGE/PHASE REQUIREMENTS WITH SUBMITTAL PRIOR TO INSTALLATION.

SHEET NOTES

1. CORRIDORS T24: TO MEET CEC 130.1(C)(7)A, LIGHTING REDUCTION IN CORRIDORS, DIM CORRIDORS TO 50% WHEN UNOCCUPIED. ZONE OCCUPANCY SENSOR DEVICES ON EACH SIDE OF FIREWALL TOGETHER. PROVIDE SEPARATE RELAY FOR EMERGENCY/NONEMERGENCY AND CONFIRM ALL DIMMING TYPES, PROVIDE NECESSARY COMPONENTS FOR A FULL SYSTEM.
2. EMERGENCY: ALL EMERGENCY WIRING MUST BE KEPT INDEPENDENT FROM ALL OTHER WIRING, PER NEC 700.10(B)
3. LOBBY LIGHTING TO BE ON 24/7.
4. SUSPEND LIGHTS AND EXIT SIGNS IN ALL AREAS OVER 10FT, THIS INCLUDES GARAGE, BACK OF HOUSE, 2-STORY TALL AMENITY/LOBBIES, ETC. SUSPEND OTHER UTILITIES IN BOH AND GARAGE AREAS.
5. PROVIDE AN UNSWITCHED HOT TO ALL BATTERY BALLASTS, EMERGENCY FIXTURES, AND EXIT SIGNS FROM DESIGNATED CIRCUIT.
6. EACH EXIT SIGN TO HAVE JUNCTION BOX INSTALLED NEXT TO FIXTURE TO PREVENT EXIT SIGNS FROM BEING USED AS A JUNCTION BOX FOR OTHER LIGHTS PER CEC 700.10(B).
7. T24: EXTERIOR LIGHTING TO BE CONTROLLED VIA LIGHTING CONTROLS WITH ASTRONOMICAL TIMECLOCK (REF DETAILS). FIXTURES OVER 30W TO BE CONTROLLED BY OCCUPANCY SENSOR, DIM TO 50% WHEN UNOCCUPIED.
8. DEMAND RESPONSE CONTROLS ARE NOT REQUIRED SINCE THE BUILDING HAS LESS THAN 10,000 SF OF SPACE OVER .5 W/SF.
9. STAIRWELL T24: TO MEET CEC 130.1(C)(7)A, LIGHTING REDUCTION IN STAIRWELLS, DIM STAIRWELLS TO 50% WHEN UNOCCUPIED THROUGH INTEGRAL OCCUPANCY SENSORS.
10. GARAGE T24 TO MEET CEC 130.1(C)(7)B, LIGHTING REDUCTION IN GARAGE, DIM GARAGE FIXTURES TO 50% WHEN UNOCCUPIED THROUGH INTEGRAL OCCUPANCY SENSORS.
11. T24: PROVIDE PHOTOCELL TO DIM/CONTROL LIGHT FIXTURES WITHIN DAYLIGHT ZONES AS REQUIRED BY T24. ZONES CONTAINING LESS THAN 120 WATTS ARE NOT REQUIRED TO HAVE A PHOTOCELL.

COPYRIGHT 2023, EMERALD CITY ENGINEERS, INC.
K:\LAYTON J:\2293-007 231 GRANT, PALO ALTO, CA\DWG\E202 SECOND FLOOR PLAN - ELECTRICAL.DWG 03-17-2023 11:47

VAN METER WILLIAMS POLLACK LLP
ARCHITECTURE | URBAN DESIGN ■ SAN FRANCISCO | DENVER | MINNEAPOLIS
333 Bryant Street, Suite 300, San Francisco, CA 94107 T 415.974.5252

CIVIL ENGINEER
BKF ENGINEERS
1730 N. FIRST ST SUITE 600
SAN JOSE, CA 95112

JOINT TRENCH / DRY UTILITIES
MILLENIUM DESIGN
PO BOX 737
ALAMO, CA 94507

LANDSCAPE ARCHITECT
PLURAL STUDIO
2742 17TH STREET
SAN FRANCISCO, CA 94110

STRUCTURAL ENGINEER
HOHBACH-LEWIN, INC
250 SHERIDAN AVE STE 100
PALO ALTO, CA 94306

MEP ENGINEER
EMERALD CITY ENGINEERS
21705 HIGHWAY 99
LYNWOOD, WA 98036

ENERGY CONSULTANT
REDWOOD ENERGY
1887 G STREET
ARCATA, CA 95521

EMERALD CITY ENGINEERS, INC
21705 Highway 99
Lynnwood, WA 98036
TEL: 425-741-1200

REGISTERED PROFESSIONAL ENGINEER ADAM C. FRENCH E-19424 EXP. 3-31-24 ELECTRICAL STATE OF CALIFORNIA
03-20-23

COUNTY OF SANTA CLARA
BUILDING INSPECTION OFFICE
PLANS APPROVED FOR PERMIT
RECORD NO.: DEV22-1242
BY: nick.gomes Date: 07/28/2023
HARD COPY OF THESE STAMPED PLANS MUST BE ON THE SITE FOR INSPECTIONS

ID	DATE	NAME
1	11/11/2022	PERMIT CONVENTIONAL
A	12/16/2022	BID SET
B	03/20/2023	BID ADDENDUM
2	03/20/2023	PLAN CHECK RESPONSE 2

Project:

EDUCATOR HOUSING
231 GRANT AVENUE

231 GRANT AVENUE
PALO ALTO, CA 94306

Client:
MERCY HOUSING/
ABODE COMMUNITIES

LOW VOLTAGE SYSTEMS SHEET LEGEND:

- KEY CARD READER ACCESS FOB — SEE ARCH BACKGROUNDS FOR LOCATIONS
- CCTV SECURITY CAMERA — SEE ARCH BACKGROUNDS FOR LOCATIONS
- (A) DOOR DETECTOR BUZZER IF PROPPED OPEN — SEE ARCH BACKGROUNDS FOR LOCATIONS

SECOND FLOOR PLAN - ELECTRICAL

JOB #: 2293-007
SCALE: AS NOTED

E2.02

PLAN CHECK RESPONSE 2 | DATE: 03/20/2023

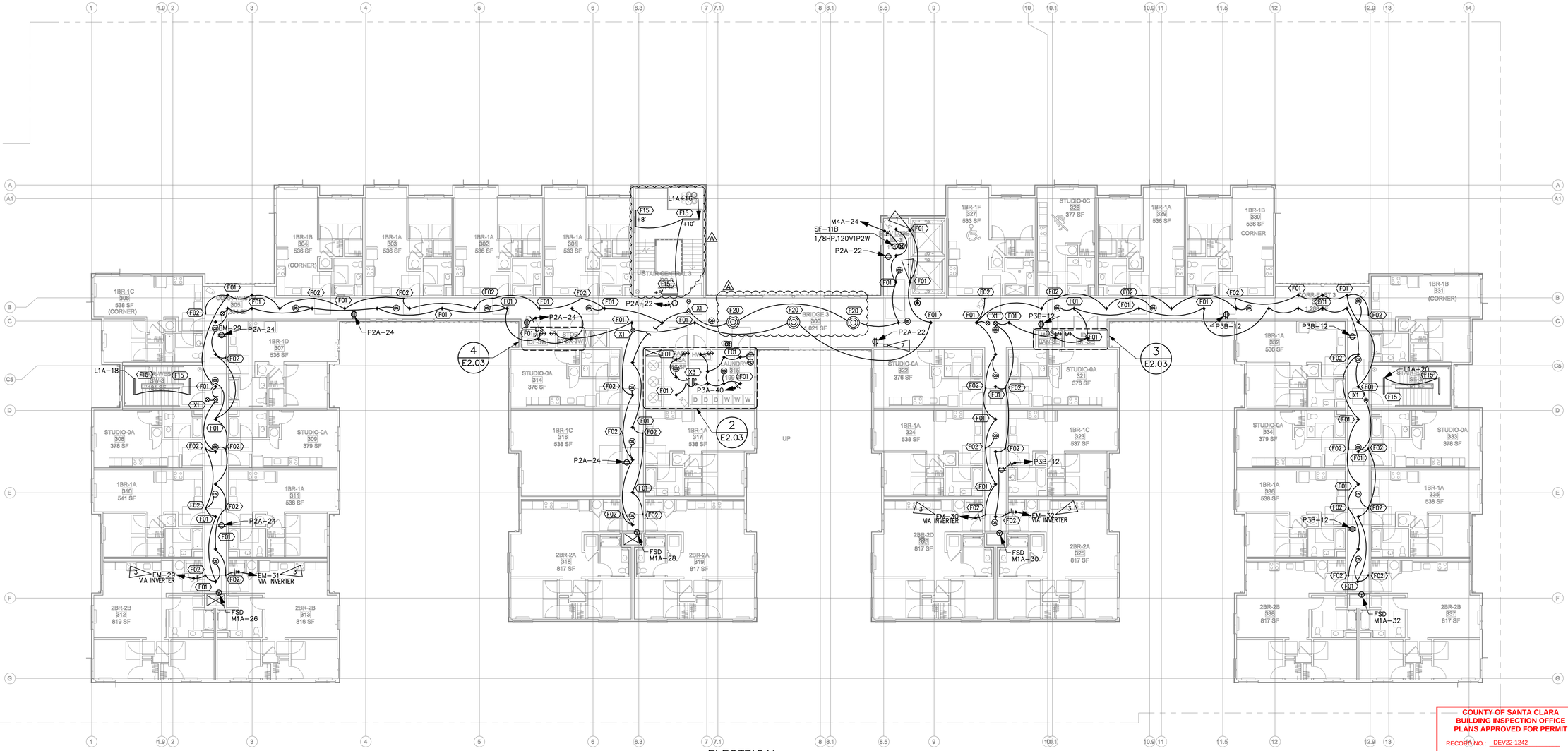

ELECTRICAL

THIRD FLOOR (1 E2.03)

SCALE: 3/32" = 1'-0"

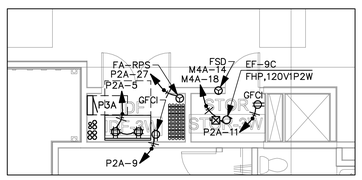

POWER ENLARGED

IDF CLOSET (4 E2.03)

SCALE: 3/16" = 1'-0"

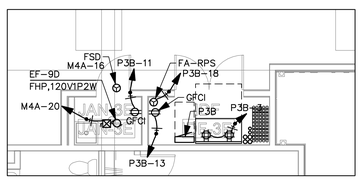

POWER ENLARGED

IDF CLOSET (3 E2.03)

SCALE: 3/16" = 1'-0"

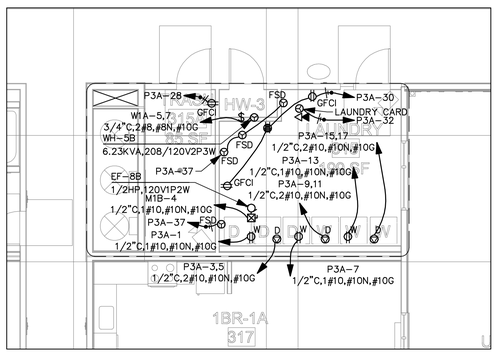

POWER ENLARGED

LAUNDRY ROOM (2 E2.03)

SCALE: 3/16" = 1'-0"

FLAG NOTES	
1	ELEVATOR LOBBY LIGHTING TO REMAIN CONTINUOUSLY ON 24 HOURS A DAY. LIGHTING NOT TO BE CONTROLLED BY CORRIDOR OCCUPANCY SENSORS.
2	MULTI-LEVEL DIMMING NOT REQUIRED PER CEC 130.1(b). ROOM IS LESS THAN 0.5 W/SF OR LESS THAN 100 SF.
3	T24: PROVIDE MANUAL SWITCH WITH ANNUNCIATING MEANS FOR LIGHTING CIRCUITS IN STAIRS, PARKING GARAGES, PUBLIC RESTROOMS, AND CORRIDORS (SEE PLANS FOR SPECIFIC CIRCUITRY). LOCATE SWITCH WITHIN CLOSE VICINITY TO THE PANEL FEEDING THE LIGHTING CIRCUIT. SWITCHES MAY BE NOT ACCESSIBLE TO UNAUTHORIZED PERSONNEL PER CEC 130.1(c)(2) (EXCEPTION 2). PROVIDE PERMANENT LABELS ANNOTATING AREA THE SWITCH CONTROLS. SWITCHES TO BE ILLUMINATING, LEVITON 5631-2W.
4	DAYLIGHT ZONE PHOTOCELL NOT REQUIRED PER CEC EXCEPTION 1 TO SECTION 130.1(D)2. DAYLIGHT ZONE IS LESS THAN 120 WATTS.
5	UNIT PORCH LIGHTING/POWER TO BE CIRCUITED TO CORRESPONDING UNIT PANEL. REFER TO UNIT PLANS FOR SWITCH LOCATIONS.
6	PROVIDE "THERMOSTAT" STYLE PLASTIC LOCKING COVER TO PROTECT DIMMER SWITCHES.
7	PROVIDE A REMOTE CALL STATION FOR RESCUE ASSISTANCE 2-WAY COMMUNICATION DEVICE. REFER TO DETAIL 2/E6.01 FOR WIRING DIAGRAM.
8	SEPARATE WIFI PROVIDED IN COMMON AREAS FOR STAFF AND TENANTS
9	CONFIRM VOLTAGE/PHASE REQUIREMENTS WITH SUBMITTAL PRIOR TO INSTALLATION.

SHEET NOTES	
1.	CORRIDORS T24: TO MEET CEC 130.1(C)(7)A, LIGHTING REDUCTION IN CORRIDORS, DIM CORRIDORS TO 50% WHEN UNOCCUPIED. ZONE OCCUPANCY SENSOR DEVICES ON EACH SIDE OF FIREWALL TOGETHER. PROVIDE SEPARATE RELAY FOR EMERGENCY/NONEMERGENCY AND CONFIRM ALL DIMMING TYPES. PROVIDE NECESSARY COMPONENTS FOR A FULL SYSTEM.
2.	EMERGENCY: ALL EMERGENCY WIRING MUST BE KEPT INDEPENDENT FROM ALL OTHER WIRING, PER NEC 700.10(B)
3.	LOBBY LIGHTING TO BE ON 24/7.
4.	SUSPEND LIGHTS AND EXIT SIGNS IN ALL AREAS OVER 10FT, THIS INCLUDES GARAGE, BACK OF HOUSE, 2-STORY TALL AMENITY/LOBBIES, ETC. SUSPEND OTHER UTILITIES IN BOH AND GARAGE AREAS.
5.	PROVIDE AN UNSWITCHED HOT TO ALL BATTERY BALLASTS, EMERGENCY FIXTURES, AND EXIT SIGNS FROM DESIGNATED CIRCUIT.
6.	EACH EXIT SIGN TO HAVE JUNCTION BOX INSTALLED NEXT TO FIXTURE TO PREVENT EXIT SIGNS FROM BEING USED AS A JUNCTION BOX FOR OTHER LIGHTS PER CEC 700.10(B).
7.	T24: EXTERIOR LIGHTING TO BE CONTROLLED VIA LIGHTING CONTROLS WITH ASTRONOMICAL TIMECLOCK (REF DETAILS). FIXTURES OVER 30W TO BE CONTROLLED BY OCCUPANCY SENSOR, DIM TO 50% WHEN UNOCCUPIED.
8.	DEMAND RESPONSE CONTROLS ARE NOT REQUIRED SINCE THE BUILDING HAS LESS THAN 10,000 SF OF SPACE OVER .5 W/SF.
9.	STAIRWELL T24: TO MEET CEC 130.1(C)(7)A, LIGHTING REDUCTION IN STAIRWELLS, DIM STAIRWELLS TO 50% WHEN UNOCCUPIED THROUGH INTEGRAL OCCUPANCY SENSORS.
10.	GARAGE T24 TO MEET CEC 130.1(C)(7)B, LIGHTING REDUCTION IN GARAGE, DIM GARAGE FIXTURES TO 50% WHEN UNOCCUPIED THROUGH INTEGRAL OCCUPANCY SENSORS.
11.	T24: PROVIDE PHOTOCELL TO DIM/CONTROL LIGHT FIXTURES WITHIN DAYLIGHT ZONES AS REQUIRED BY T24. ZONES CONTAINING LESS THAN 120 WATTS ARE NOT REQUIRED TO HAVE A PHOTOCELL.

LOW VOLTAGE SYSTEMS SHEET LEGEND:	
KR	KEY CARD READER ACCESS FOB SEE ARCH BACKGROUNDS FOR LOCATIONS
	CCTV SECURITY CAMERA SEE ARCH BACKGROUNDS FOR LOCATIONS
A	DOOR DETECTOR BUZZER IF PROPPED OPEN. SEE ARCH BACKGROUNDS FOR LOCATIONS

COPYRIGHT 2023, EMERALD CITY ENGINEERS, INC.
K:\LAYTON J:\2293-007 231 GRANT, PALO ALTO, CA\DWG\E203 THIRD FLOOR PLAN - ELECTRICAL.DWG 03-17-2023 11:47

VAN METER WILLIAMS POLLACK LLP
ARCHITECTURE | URBAN DESIGN ■ SAN FRANCISCO | DENVER | MINNEAPOLIS
333 Bryant Street, Suite 300, San Francisco, CA 94107 T 415.974.5252

CIVIL ENGINEER
BKF ENGINEERS
1730 N. FIRST ST SUITE 600
SAN JOSE, CA 95112

JOINT TRENCH / DRY UTILITIES
MILLENIUM DESIGN
PO BOX 737
ALAMO, CA 94507

LANDSCAPE ARCHITECT
PLURAL STUDIO
2742 17TH STREET
SAN FRANCISCO, CA 94110

STRUCTURAL ENGINEER
HOHBACH-LEWIN, INC
250 SHERIDAN AVE STE 100
PALO ALTO, CA 94306

MEP ENGINEER
EMERALD CITY ENGINEERS
21705 HIGHWAY 99
LYNWOOD, WA 98036

ENERGY CONSULTANT
REDWOOD ENERGY
1887 G STREET
ARCATA, CA 95521

EMERALD CITY ENGINEERS, INC
21705 Highway 99
Lynnwood, WA 98036
TEL: 425-741-1200

REGISTERED PROFESSIONAL ENGINEER
ADAM C. FRENCH
E19424
EXP. 3-31-24
ELECTRICAL
STATE OF CALIFORNIA

03-20-23

COUNTY OF SANTA CLARA
BUILDING INSPECTION OFFICE
PLANS APPROVED FOR PERMIT
RECORD NO.: DEV22-1242
BY: rick.gomes Date: 07/28/2023
HARD COPY OF THESE STAMPED PLANS MUST BE ON THE SITE FOR INSPECTIONS

ID	DATE	NAME
1	11/11/2022	PERMIT CONVENTIONAL
A	12/16/2022	BID SET
B	03/20/2023	BID ADDENDUM
2	03/20/2023	PLAN CHECK RESPONSE 2

Project:

EDUCATOR HOUSING
231 GRANT AVENUE

231 GRANT AVENUE
PALO ALTO, CA 94306

Client:
MERCY HOUSING/
ABODE COMMUNITIES

THIRD FLOOR PLAN - ELECTRICAL

JOB #: 2293-007
SCALE: AS NOTED

E2.03

PLAN CHECK RESPONSE 2 | DATE: 03/20/2023

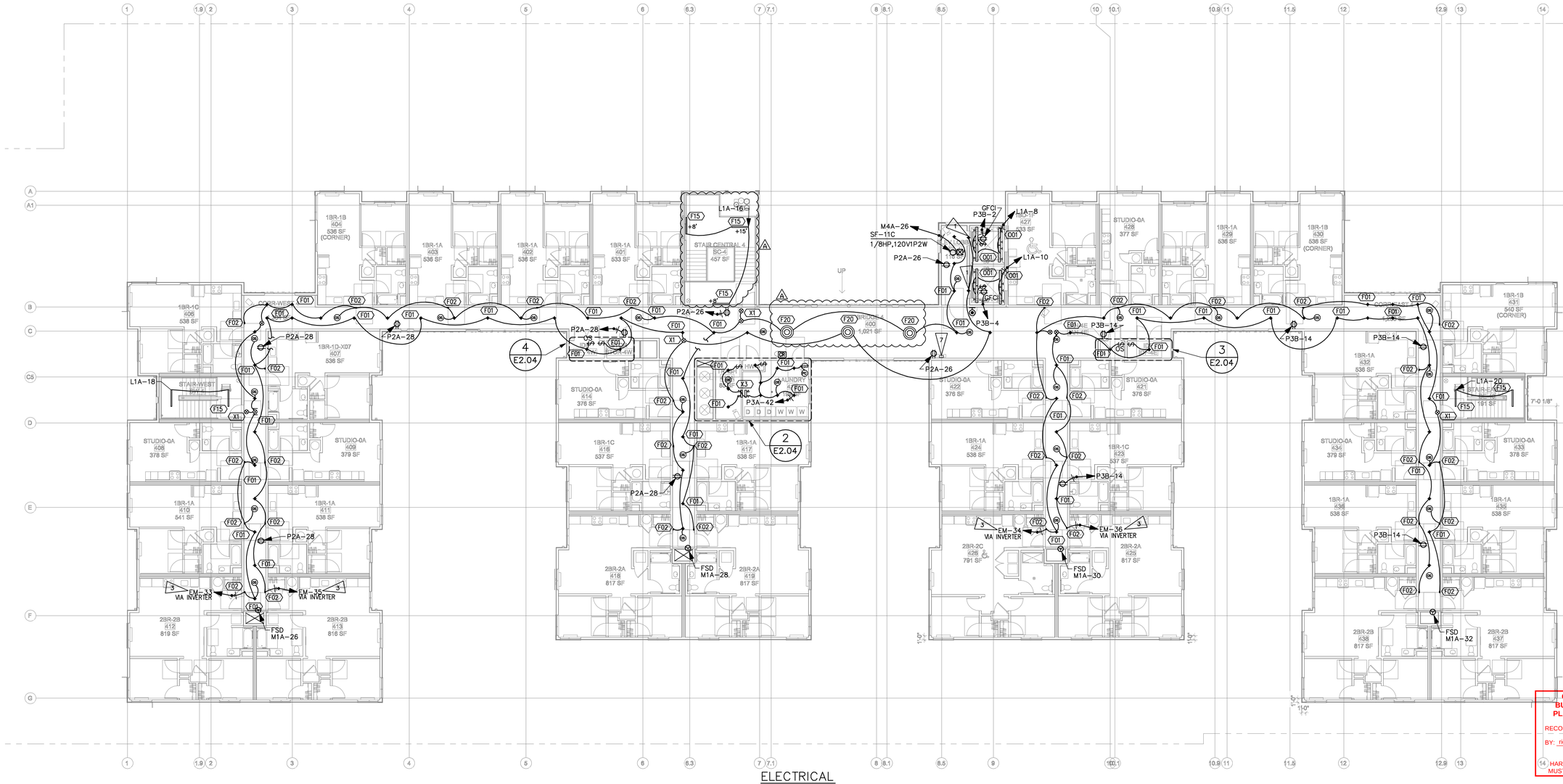

ELECTRICAL

FOURTH FLOOR 1 E2.04

SCALE: 3/32" = 1'-0"

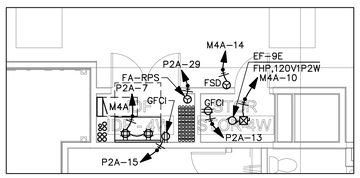

POWER ENLARGED

IDF CLOSET 4 E2.04

SCALE: 3/16" = 1'-0"

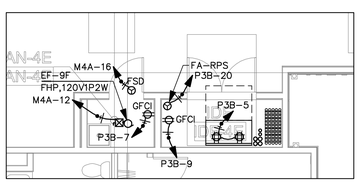

POWER ENLARGED

IDF CLOSET 3 E2.04

SCALE: 3/16" = 1'-0"

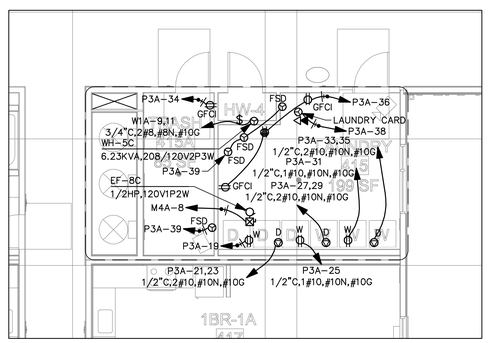

POWER ENLARGED

LAUNDRY ROOM 2 E2.04

SCALE: 3/16" = 1'-0"

FLAG NOTES
1 ELEVATOR LOBBY LIGHTING TO REMAIN CONTINUOUSLY ON 24 HOURS A DAY. LIGHTING NOT TO BE CONTROLLED BY CORRIDOR OCCUPANCY SENSORS.
2 MULTI-LEVEL DIMMING NOT REQUIRED PER CEC 130.1(b). ROOM IS LESS THAN 0.5 W/SF OR LESS THAN 100 SF.
3 T24: PROVIDE MANUAL SWITCH WITH ANNUNCIATING MEANS FOR LIGHTING CIRCUITS IN STAIRS, PARKING GARAGES, PUBLIC RESTROOMS, AND CORRIDORS (SEE PLANS FOR SPECIFIC CIRCUITRY). LOCATE SWITCH WITHIN CLOSE VICINITY TO THE PANEL FEEDING THE LIGHTING CIRCUIT. SWITCHES MAY BE NOT ACCESSIBLE TO UNAUTHORIZED PERSONNEL PER CEC 130.1(a)(2) (EXCEPTION 2). PROVIDE PERMANENT LABELS ANNOTATING AREA THE SWITCH CONTROLS. SWITCHES TO BE ILLUMINATING, LEVITON 5631-2W.
4 DAYLIGHT ZONE PHOTOCELL NOT REQUIRED PER CEC EXCEPTION 1 TO SECTION 130.1(D)2. DAYLIGHT ZONE IS LESS THAN 120 WATTS.
5 UNIT PORCH LIGHTING/POWER TO BE CIRCUITED TO CORRESPONDING UNIT PANEL. REFER TO UNIT PLANS FOR SWITCH LOCATIONS.
6 PROVIDE "THERMOSTAT" STYLE PLASTIC LOCKING COVER TO PROTECT DIMMER SWITCHES.
7 PROVIDE A REMOTE CALL STATION FOR RESCUE ASSISTANCE 2-WAY COMMUNICATION DEVICE. REFER TO DETAIL 2/E6.01 FOR WIRING DIAGRAM.
8 SEPARATE WIFI PROVIDED IN COMMON AREAS FOR STAFF AND TENANTS
9 CONFIRM VOLTAGE/PHASE REQUIREMENTS WITH SUBMITTAL PRIOR TO INSTALLATION.

SHEET NOTES
1. CORRIDORS T24: TO MEET CEC 130.1(C)(7)A, LIGHTING REDUCTION IN CORRIDORS, DIM CORRIDORS TO 50% WHEN UNOCCUPIED. ZONE OCCUPANCY SENSOR DEVICES ON EACH SIDE OF FIREWALL TOGETHER. PROVIDE SEPARATE RELAY FOR EMERGENCY/NONEMERGENCY AND CONFIRM ALL DIMMING TYPES, PROVIDE NECESSARY COMPONENTS FOR A FULL SYSTEM.
2. EMERGENCY: ALL EMERGENCY WIRING MUST BE KEPT INDEPENDENT FROM ALL OTHER WIRING, PER NEC 700.10(B)
3. LOBBY LIGHTING TO BE ON 24/7.
4. SUSPEND LIGHTS AND EXIT SIGNS IN ALL AREAS OVER 10FT, THIS INCLUDES GARAGE, BACK OF HOUSE, 2-STORY TALL AMENITY/LOBBIES, ETC. SUSPEND OTHER UTILITIES IN BOH AND GARAGE AREAS.
5. PROVIDE AN UNSWITCHED HOT TO ALL BATTERY BALLASTS, EMERGENCY FIXTURES, AND EXIT SIGNS FROM DESIGNATED CIRCUIT.
6. EACH EXIT SIGN TO HAVE JUNCTION BOX INSTALLED NEXT TO FIXTURE TO PREVENT EXIT SIGNS FROM BEING USED AS A JUNCTION BOX FOR OTHER LIGHTS PER CEC 700.10(B).
7. T24: EXTERIOR LIGHTING TO BE CONTROLLED VIA LIGHTING CONTROLS WITH ASTRONOMICAL TIMECLOCK (REF DETAILS). FIXTURES OVER 30W TO BE CONTROLLED BY OCCUPANCY SENSOR, DIM TO 50% WHEN UNOCCUPIED.
8. DEMAND RESPONSE CONTROLS ARE NOT REQUIRED SINCE THE BUILDING HAS LESS THAN 10,000 SF OF SPACE OVER .5 W/SF.
9. STAIRWELL T24: TO MEET CEC 130.1(C)(7)A, LIGHTING REDUCTION IN STAIRWELLS, DIM STAIRWELLS TO 50% WHEN UNOCCUPIED THROUGH INTEGRAL OCCUPANCY SENSORS.
10. GARAGE T24 TO MEET CEC 130.1(C)(7)B, LIGHTING REDUCTION IN GARAGE, DIM GARAGE FIXTURES TO 50% WHEN UNOCCUPIED THROUGH INTEGRAL OCCUPANCY SENSORS.
11. T24: PROVIDE PHOTOCELL TO DIM/CONTROL LIGHT FIXTURES WITHIN DAYLIGHT ZONES AS REQUIRED BY T24. ZONES CONTAINING LESS THAN 120 WATTS ARE NOT REQUIRED TO HAVE A PHOTOCELL.

LOW VOLTAGE SYSTEMS SHEET LEGEND:	
KCR	KEY CARD READER ACCESS FOB SEE ARCH BACKGROUNDS FOR LOCATIONS
	CCTV SECURITY CAMERA SEE ARCH BACKGROUNDS FOR LOCATIONS
A	DOOR DETECTOR BUZZER IF PROPPED OPEN. SEE ARCH BACKGROUNDS FOR LOCATIONS

COPYRIGHT 2023, EMERALD CITY ENGINEERS, INC.
KCLAYTON J:\2293-007 231 GRANT, PALO ALTO, CA\DWG\E204 FOURTH FLOOR PLAN - ELECTRICAL.DWG 03-17-2023 11:46

VAN METER WILLIAMS POLLACK LLP
ARCHITECTURE | URBAN DESIGN ■ SAN FRANCISCO | DENVER | MINNEAPOLIS
333 Bryant Street, Suite 300, San Francisco, CA 94107 T 415.974.5252

CIVIL ENGINEER
BKF ENGINEERS
1730 N. FIRST ST SUITE 600
SAN JOSE, CA 95112

JOINT TRENCH / DRY UTILITIES
MILLENIUM DESIGN
PO BOX 737
ALAMO, CA 94507

LANDSCAPE ARCHITECT
PLURAL STUDIO
2742 17TH STREET
SAN FRANCISCO, CA 94110

STRUCTURAL ENGINEER
HOHBACH-LEWIN, INC
250 SHERIDAN AVE STE 100
PALO ALTO, CA 94306

MEP ENGINEER
EMERALD CITY ENGINEERS
21705 HIGHWAY 99
LYNWOOD, WA 98036

ENERGY CONSULTANT
REDWOOD ENERGY
1887 G STREET
ARCATA, CA 95521

EMERALD CITY ENGINEERS, INC
21705 Highway 99
Lynnwood, WA 98036
TEL: 425-741-1200

REGISTERED PROFESSIONAL ENGINEER ADAM C. FRENCH E-19424 EXP. 3-31-24 ELECTRICAL STATE OF CALIFORNIA

03-20-23

COUNTY OF SANTA CLARA
BUILDING INSPECTION OFFICE
PLANS APPROVED FOR PERMIT
RECORD NO.: DEV22-1242
BY: rick.gomes Date: 07/28/2023
14 HARD COPY OF THESE STAMPED PLANS MUST BE ON THE SITE FOR INSPECTIONS

ID	DATE	NAME
1	11/11/2022	PERMIT CONVENTIONAL
A	12/16/2022	BID SET
B	03/20/2023	BID ADDENDUM
2	03/20/2023	PLAN CHECK RESPONSE 2

Project:

EDUCATOR HOUSING
231 GRANT AVENUE

231 GRANT AVENUE
PALO ALTO, CA 94306

Client:
mercy HOUSING
abode communities
MERCY HOUSING/
ABODE COMMUNITIES

FOURTH FLOOR PLAN - ELECTRICAL

JOB #: 2293-007
SCALE: AS NOTED

E2.04

PLAN CHECK RESPONSE 2 | DATE: 03/20/2023

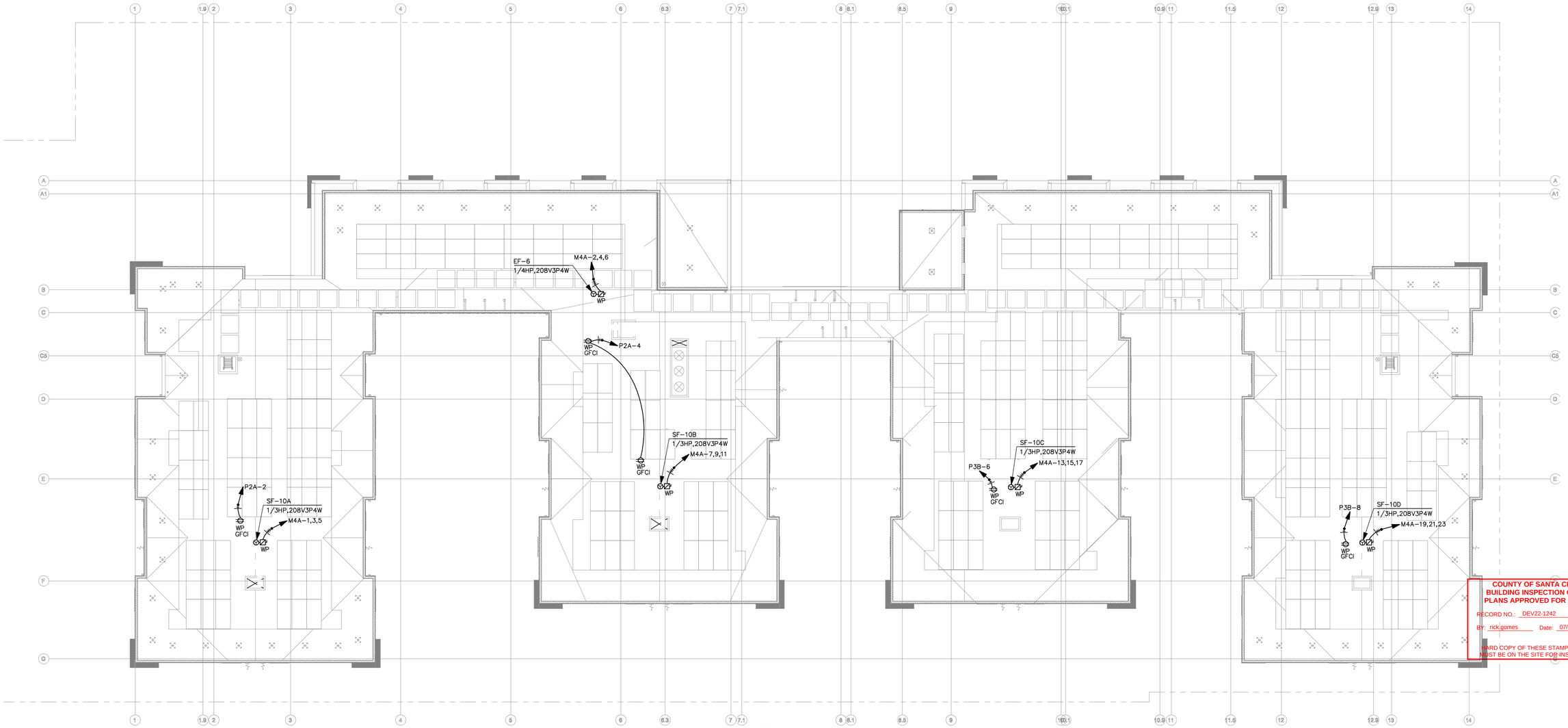

ELECTRICAL

ROOF

SCALE: 3/32" = 1'-0"

1 / E2.05

VAN METER WILLIAMS POLLACK LLP

ARCHITECTURE | URBAN DESIGN ■ SAN FRANCISCO | DENVER | MINNEAPOLIS
333 Bryant Street, Suite 300, San Francisco, CA 94107 T 415.974.5252

CIVIL ENGINEER
BKF ENGINEERS
1730 N. FIRST ST SUITE 600
SAN JOSE, CA 95112

JOINT TRENCH / DRY UTILITIES
MILLENIUM DESIGN
PO BOX 737
ALAMO, CA 94507

LANDSCAPE ARCHITECT
PLURAL STUDIO
2742 17TH STREET
SAN FRANCISCO, CA 94110

STRUCTURAL ENGINEER
HOHBACH-LEWIN, INC
250 SHERIDAN AVE STE 100
PALO ALTO, CA 94306

MEP ENGINEER
EMERALD CITY ENGINEERS
21705 HIGHWAY 99
LYNWOOD, WA 98036

ENERGY CONSULTANT
REDWOOD ENERGY
1887 G STREET
ARCATA, CA 95521

EMERALD CITY ENGINEERS, INC
21705 Highway 99
Lynnwood, WA 98036
TEL: 425-741-1200

COUNTY OF SANTA CLARA
BUILDING INSPECTION OFFICE
PLANS APPROVED FOR PERMIT
RECORD NO.: DEV22-1242
BY: rick.gomes Date: 07/28/2023
A HARD COPY OF THESE STAMPED PLANS MUST BE ON THE SITE FOR INSPECTIONS

REGISTERED PROFESSIONAL ENGINEER
ADAM C. FRENCH
E19424
EXP. 3-31-23
ELECTRICAL
STATE OF CALIFORNIA
03-20-23

ID	DATE	NAME
1	11/11/2022	PERMIT CONVENTIONAL
A	12/16/2022	BID SET
B	03/20/2023	BID ADDENDUM
2	03/20/2023	PLAN CHECK RESPONSE 2

Project:

EDUCATOR HOUSING
231 GRANT AVENUE

231 GRANT AVENUE
PALO ALTO, CA 94306

Client: MERCY HOUSING / ABODE COMMUNITIES

ROOF PLAN - ELECTRICAL

JOB #: 2293-007
SCALE: AS NOTED

E2.05

PLAN CHECK RESPONSE 2 | DATE: 03/20/2023

LOW VOLTAGE SYSTEMS SHEET LEGEND:

- KR — KEY CARD READER ACCESS FOB SEE ARCH BACKGROUNDS FOR LOCATIONS
- CCTV SECURITY CAMERA SEE ARCH BACKGROUNDS FOR LOCATIONS
- A — DOOR DETECTOR BUZZER IF PROPPED OPEN. SEE ARCH BACKGROUNDS FOR LOCATIONS

FLAG NOTES

1. ELEVATOR LOBBY LIGHTING TO REMAIN CONTINUOUSLY ON 24 HOURS A DAY. LIGHTING NOT TO BE CONTROLLED BY CORRIDOR OCCUPANCY SENSORS.
2. MULTI-LEVEL DIMMING NOT REQUIRED PER CEC 130.1(b). ROOM IS LESS THAN 0.5 W/SF OR LESS THAN 100 SF.
3. T24: PROVIDE MANUAL SWITCH WITH ANNUNCIATING MEANS FOR LIGHTING CIRCUITS IN STAIRS, PARKING GARAGES, PUBLIC RESTROOMS, AND CORRIDORS (SEE PLANS FOR SPECIFIC CIRCUITRY). LOCATE SWITCH WITHIN CLOSE VICINITY TO THE PANEL FEEDING THE LIGHTING CIRCUIT. SWITCHES MAY BE NOT ACCESSIBLE TO UNAUTHORIZED PERSONNEL PER CEC 130.1(a)(2) (EXCEPTION 2). PROVIDE PERMANENT LABELS ANNOTATING AREA THE SWITCH CONTROLS. SWITCHES TO BE ILLUMINATING, LEVITON 5631-2W.
4. DAYLIGHT ZONE PHOTOCELL NOT REQUIRED PER CEC EXCEPTION 1 TO SECTION 130.1(D)2. DAYLIGHT ZONE IS LESS THAN 120 WATTS.
5. UNIT PORCH LIGHTING/POWER TO BE CIRCUITED TO CORRESPONDING UNIT PANEL. REFER TO UNIT PLANS FOR SWITCH LOCATIONS.
6. PROVIDE "THERMOSTAT" STYLE PLASTIC LOCKING COVER TO PROTECT DIMMER SWITCHES.
7. PROVIDE A REMOTE CALL STATION FOR RESCUE ASSISTANCE 2-WAY COMMUNICATION DEVICE. REFER TO DETAIL 2/E6.01 FOR WIRING DIAGRAM.
8. SEPARATE WIFI PROVIDED IN COMMON AREAS FOR STAFF AND TENANTS
9. CONFIRM VOLTAGE/PHASE REQUIREMENTS WITH SUBMITTAL PRIOR TO INSTALLATION.

SHEET NOTES

1. CORRIDORS T24: TO MEET CEC 130.1(C)(7)A, LIGHTING REDUCTION IN CORRIDORS, DIM CORRIDORS TO 50% WHEN UNOCCUPIED. ZONE OCCUPANCY SENSOR DEVICES ON EACH SIDE OF FIREWALL TOGETHER. PROVIDE SEPARATE RELAY FOR EMERGENCY/NONEMERGENCY AND CONFIRM ALL DIMMING TYPES, PROVIDE NECESSARY COMPONENTS FOR A FULL SYSTEM.
2. EMERGENCY: ALL EMERGENCY WIRING MUST BE KEPT INDEPENDENT FROM ALL OTHER WIRING, PER NEC 700.10(B)
3. LOBBY LIGHTING TO BE ON 24/7.
4. SUSPEND LIGHTS AND EXIT SIGNS IN ALL AREAS OVER 10FT, THIS INCLUDES GARAGE, BACK OF HOUSE, 2-STORY TALL AMENITY/LOBBIES, ETC. SUSPEND OTHER UTILITIES IN BOH AND GARAGE AREAS.
5. PROVIDE AN UNSWITCHED HOT TO ALL BATTERY BALLASTS, EMERGENCY FIXTURES, AND EXIT SIGNS FROM DESIGNATED CIRCUIT.
6. EACH EXIT SIGN TO HAVE JUNCTION BOX INSTALLED NEXT TO FIXTURE TO PREVENT EXIT SIGNS FROM BEING USED AS A JUNCTION BOX FOR OTHER LIGHTS PER CEC 700.10(B).
7. T24: EXTERIOR LIGHTING TO BE CONTROLLED VIA LIGHTING CONTROLS WITH ASTRONOMICAL TIMECLOCK (REF DETAILS). FIXTURES OVER 30W TO BE CONTROLLED BY OCCUPANCY SENSOR, DIM TO 50% WHEN UNOCCUPIED.
8. DEMAND RESPONSE CONTROLS ARE NOT REQUIRED SINCE THE BUILDING HAS LESS THAN 10,000 SF OF SPACE OVER .5 W/SF.
9. STAIRWELL T24: TO MEET CEC 130.1(C)(7)A, LIGHTING REDUCTION IN STAIRWELLS, DIM STAIRWELLS TO 50% WHEN UNOCCUPIED THROUGH INTEGRAL OCCUPANCY SENSORS.
10. GARAGE T24 TO MEET CEC 130.1(C)(7)B, LIGHTING REDUCTION IN GARAGE, DIM GARAGE FIXTURES TO 50% WHEN UNOCCUPIED THROUGH INTEGRAL OCCUPANCY SENSORS.
11. T24: PROVIDE PHOTOCELL TO DIM/CONTROL LIGHT FIXTURES WITHIN DAYLIGHT ZONES AS REQUIRED BY T24. ZONES CONTAINING LESS THAN 120 WATTS ARE NOT REQUIRED TO HAVE A PHOTOCELL.

COPYRIGHT 2023, EMERALD CITY ENGINEERS, INC.

K:\LAYTON J:\2293-007 231 GRANT, PALO ALTO, CA\DWG\E205 ROOF PLAN - ELECTRICAL.DWG 03-17-2023 11:46

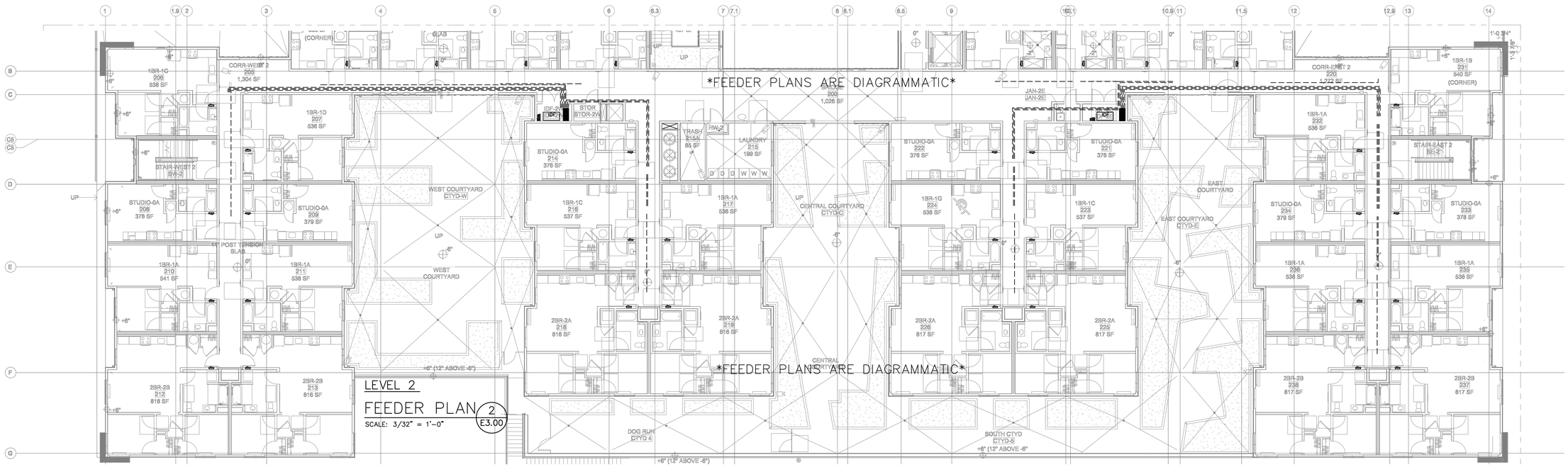

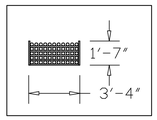

SECTION
UNIT FEEDERS 5
SCALE: NONE
E3.00

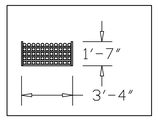

SECTION
UNIT FEEDERS 4
SCALE: NONE
E3.00

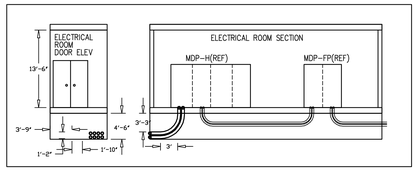

SECTION
ELEC RM ENTRY 3
SCALE: 3/32" = 1'-0"
E3.00

FLAG NOTES	SHEET NOTES
1 NOT USED.	1. IT IS THE FULL RESPONSIBILITY OF THE ELECTRICAL CONTRACTOR TO DETERMINE FINAL FEEDER ROUTING. ROUTING SHOWN IS DIAGRAMMATIC AND IS INTENDED TO PROVIDED ONE POTENTIAL ROUTING OF APARTMENT FEEDERS. 2. JBOXES AND SPLICE BOXES ARE ALLOWED IF APPROVED BY THE LOCAL AHJ. 3. CONTRACTOR TO CONFIRM ALL BLOCKOUT SIZES AND DIMENSIONS. 4. FEEDERS ARE TO BE ROUTED HORIZONTALLY ON UNISTRUT, TIGHT TO THE UNDERSIDE OF STRUCTURE WITH SUFFICIENT SUPPORTS, SAGGING IS NOT ALLOWED. 5. PROVIDE ALL NECESSARY FIRE SEALING THROUGH RATED PENETRATIONS.

COUNTY OF SANTA CLARA
BUILDING INSPECTION OFFICE
PLANS APPROVED FOR PERMIT
RECORD NO.: DEV22-1242
BY: rick.gomes Date: 07/28/2023
HARD COPY OF THESE STAMPED PLANS MUST BE ON THE SITE FOR INSPECTIONS

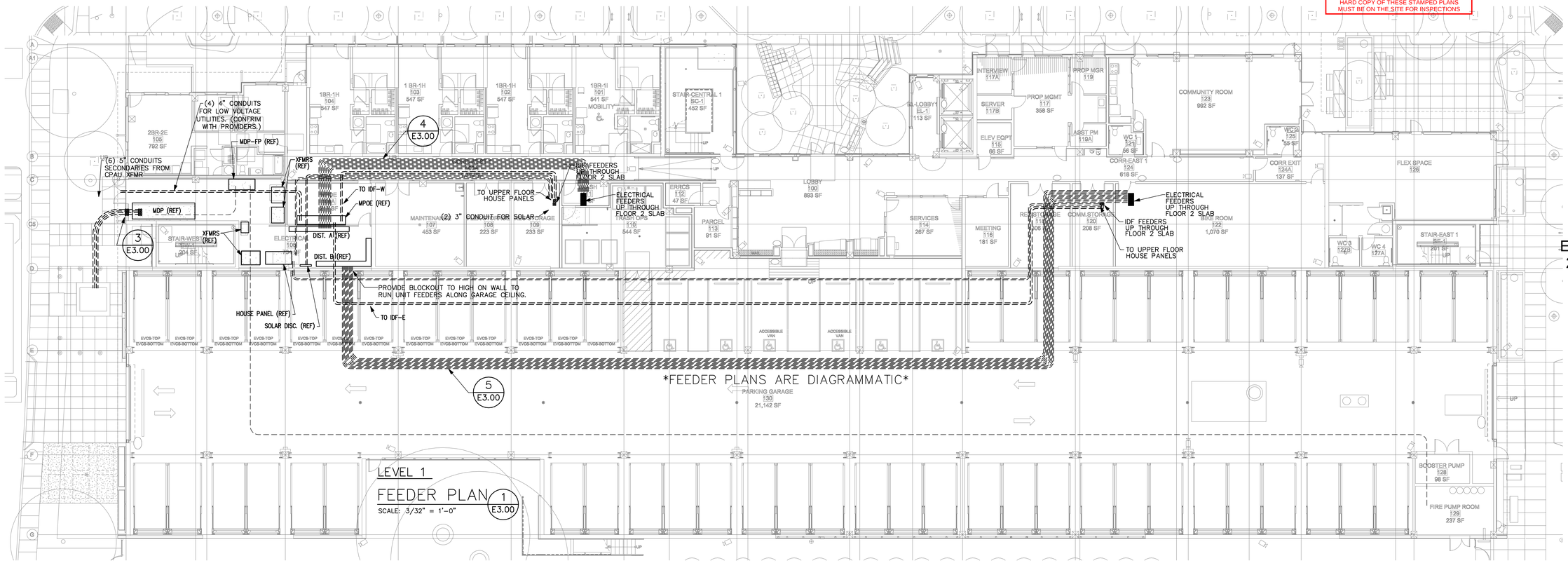

VAN METER WILLIAMS POLLACK LLP
ARCHITECTURE | URBAN DESIGN ■ SAN FRANCISCO | DENVER | MINNEAPOLIS
333 Bryant Street, Suite 300, San Francisco, CA 94107 T 415.974.5252

CIVIL ENGINEER
BKF ENGINEERS
1730 N. FIRST ST SUITE 600
SAN JOSE, CA 95112

JOINT TRENCH / DRY UTILITIES
MILLENIUM DESIGN
PO BOX 737
ALAMO, CA 94507

LANDSCAPE ARCHITECT
PLURAL STUDIO
2742 17TH STREET
SAN FRANCISCO, CA 94110

STRUCTURAL ENGINEER
HOHBACH-LEWIN, INC
250 SHERIDAN AVE STE 100
PALO ALTO, CA 94306

MEP ENGINEER
EMERALD CITY ENGINEERS
21705 HIGHWAY 99
LYNWOOD, WA 98036

ENERGY CONSULTANT
REDWOOD ENERGY
1887 Q STREET
ARCATA, CA 95521

EMERALD CITY ENGINEERS, INC
21705 Highway 99
Lynnwood, WA 98036
TEL: 425-741-1200

REGISTERED PROFESSIONAL ENGINEER ADAM C. FRENCH CERTIFICATE NO. E-19121 EXP. 3-31-24 ELECTRICAL STATE OF CALIFORNIA
03-20-23

ID	DATE	NAME
1	11/11/2022	PERMIT CONVENTIONAL
A	12/16/2022	BID SET
B	03/20/2023	BID ADDENDUM
2	03/20/2023	PLAN CHECK RESPONSE 2

Project:

EDUCATOR HOUSING
231 GRANT AVENUE

231 GRANT AVENUE
PALO ALTO, CA 94306

Client:
MERCY HOUSING/
ABODE COMMUNITIES

FEEDER PLAN

JOB #: 2293-007
SCALE: AS NOTED

E3.00

PLAN CHECK RESPONSE 2 | DATE: 03/20/2023

COPYRIGHT 2023, EMERALD CITY ENGINEERS, INC.
K:\CAD\PW\E300 FEEDER PLAN.DWG 03-17-2023 11:45

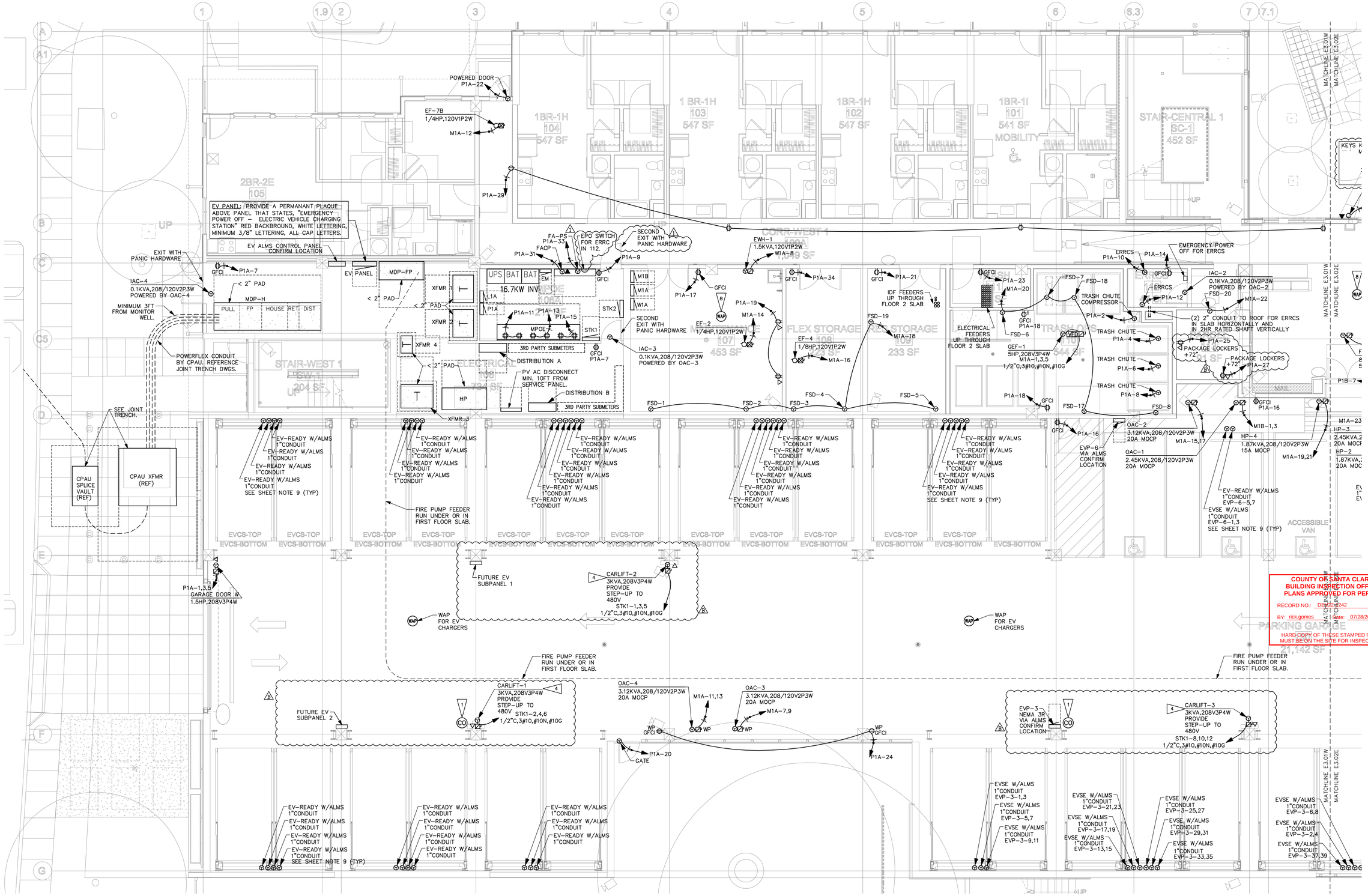

COUNTY OF SANTA CLARA
BUILDING INSPECTION OFFICE
PLANS APPROVED FOR PERMIT
RECORD NO.: DE22-0242
BY: rick.gomes Date: 07/28/2023
HARD COPY OF THESE STAMPED PLANS MUST BE ON THE SITE FOR INSPECTIONS

FLAG NOTES

1. CO SENSOR SYSTEM PROVIDED BY MECH. CONTRACTOR. PROVIDE CONDUIT, CONFIRM ALL ROUTING WITH MECH. CONTRACTOR PRIOR TO INSTALLATION. CONFIRM LOCATION OF HEADEND EQUIPMENT. REFER TO 9/E6.01.
2. PROVIDE A REMOTE CALL STATION FOR RESCUE ASSISTANCE 2-WAY COMMUNICATION DEVICE. REFER TO DETAIL 2/E6.01 FOR WIRING DIAGRAM.
3. HOT WATER CIRCULATION PUMPS WIRING, REFER TO DETAIL 4/E6.2 FOR AQUASTAT, PUMP LAG-LEAD CONTROLLER, AND HWCP WIRING.
4. CONFIRM VOLTAGE/PHASE AND OVERCURRENT PROTECTION REQUIREMENTS WITH SUBMITTAL PRIOR TO INSTALLATION.
5. CONTROLLED RECEPTACLE: IN KITCHENS, LOBBIES, & OFFICE/CONFERENCE SPACES, AN OCCUPANCY-SENSOR-CONTROLLED OUTLET MUST BE PROVIDED WITHIN 6' OF EACH REGULAR OUTLET. PROVIDE PERMANENT LABEL STATING "CONTROLLED RECEPTACLE".
6. OCCUPANCY SENSOR FOR CONTROLLED RECEPTACLES.
7. PROVIDE A REMOTE CALL STATION FOR RESCUE ASSISTANCE 2-WAY COMMUNICATION DEVICE. REFER TO DETAIL 2/E6.01 FOR WIRING DIAGRAM.
8. SEPARATE WIFI PROVIDED IN COMMON AREAS FOR STAFF AND TENANTS.
9. PROVIDE MANUAL SWITCH FOR LIGHTING CIRCUITS IN STAIRS, PARKING GARAGES, PUBLIC RESTROOMS, AND CORRIDORS (SEE PLANS FOR SPECIFIC CIRCUITRY). LOCATE SWITCH WITHIN CLOSE VICINITY TO THE PANEL FEEDING THE LIGHTING CIRCUIT. SWITCHES MAY BE NOT ACCESSIBLE TO UNAUTHORIZED PERSONNEL PER CEC 130.1(a)(2) (EXCEPTION 2). PROVIDE PERMANENT LABELS ANNOTATING AREA THE SWITCH CONTROLS.

STAIR 1	STAIR 2	PARKING GARAGE	CORRIDOR Floor 1	CORRIDOR Floor 2	CORRIDOR Floor 3	CORRIDOR Floor 4

SHEET NOTES

1. PROVIDE TAMPER RESISTANT RECEPTACLES THROUGHOUT PUBLIC SPACES.
2. WATER SUBMETER REPEATERS ARE TO BE LOCATED IN THE IDF CLOSETS, UTILIZING THE EXISTING POWER CIRCUITRY.
3. SUB-GRADE FLOOR MOUNTED SWITCHBOARDS SHALL BE SUPPORTED BY LESS THAN 2" CONCRETE BASE, TOP POSITION OF OVER-CURRENT DEVICES TO NOT EXCEED 6'7" ABOVE WORKING SPACE FLOOR AREA.
4. NO PIPING, DUCTS, OR EQUIPMENT FOREIGN TO ELECTRICAL EQUIPMENT SHALL BE PERMITTED TO BE LOCATED WITHIN THE THE VERTICAL 6' DEDICATED SPACE ABOVE THE ELECTRICAL EQUIPMENT. IF ABOVE 6', SHEET METAL DRIP PANS MAY BE USED IF APPROVED BY THE LOCAL AHJ.
5. POWER TO FIRE ALARM EQUIPMENT IS SHOWN FOR BIDDING PURPOSES ONLY. COORDINATE ALL FIRE ALARM POWER REQUIREMENTS WITH DESIGN/BUILD FIRE ALARM CONTRACTOR PRIOR TO ROUGH-IN.
6. OPEN EQUIPMENT DOORS SHALL NOT IMPEDE THE ENTRY TO OR EGRESS FROM THE WORKING SPACE.
7. ROOF CONDUITS NEED TO BE MINIMUM 7/8" OFF THE FINISHED ROOF.
8. OUTDOOR RECEPTACLES MUST BE "EXTRA DUTY".
9. EV READY STALLS: PRE-WIRE IN 1" CONDUIT, WIRE SIZE PER VOLTAGE DROP. WHEN EV CHARGERS ARE INSTALLED, AN AUTOMATED LOAD MANAGEMENT SYSTEM (ALMS) MUST BE PROVIDED. THE ALMS TO REDUCE EV CHARGERS TO 1.4KW EACH MINIMUM. TOTAL MAXIMUM DEMAND LIMITED TO 157KW (112 STALLS AT 1.4KW EACH) UNTIL A LOAD TEST STUDY CAN BE DONE AFTER THE BUILDING IS OPEN.
   SECTION 4.106.4.2.3: AUTOMATED LOAD MANAGEMENT SYSTEM SHALL BE ALLOWED TO MEET REQ. OF 4.106.4.2. (MINIMUM 1.4KW LOAD CAPACITY PER PARKING SPACE.)
10. EVSE: INSTALLED EV CHARGERS WITH ALMS SYSTEM, SEE ABOVE ALMS NOTES.
11. STEP-DOWN TRANSFORMERS SHOULD BE ISOLATED WITH CAPTIVE NEOPRENE MOUNTS AND CERTIFIED AT LEAST 10DB BELOW NEMA RATING. (ACOUSTICAL REQUIREMENT.)
12. ALL FIRE RATED EGRESS DOORS TO BE FIRE EXIT HARDWARE PER CBC 1010.1.10

LOW VOLTAGE SYSTEMS LEGEND:

- WAP — WIRELESS ACCESS POINT
- SP — SPEAKER

POWER ENLARGED FIRST FLOOR WEST

SCALE: 3/16" = 1'-0"

1 / E3.01W

COPYRIGHT 2023, EMERALD CITY ENGINEERS, INC.
K:\2293-007 231 GRANT, PALO ALTO, CA\DWG\E301W FIRST FLOOR WEST - POWER ENLARGED.DWG 03-17-2023 11:45

VAN METER WILLIAMS POLLACK LLP
ARCHITECTURE | URBAN DESIGN ■ SAN FRANCISCO | DENVER | MINNEAPOLIS
333 Bryant Street, Suite 300, San Francisco, CA 94107 T 415.974.5252

CIVIL ENGINEER
BKF ENGINEERS
1730 N. FIRST ST SUITE 600
SAN JOSE, CA 95112

JOINT TRENCH / DRY UTILITIES
MILLENIUM DESIGN
PO BOX 737
ALAMO, CA 94507

LANDSCAPE ARCHITECT
PLURAL STUDIO
2742 17TH STREET
SAN FRANCISCO, CA 94110

STRUCTURAL ENGINEER
HOHBACH-LEWIN, INC
250 SHERIDAN AVE STE 100
PALO ALTO, CA 94306

MEP ENGINEER
EMERALD CITY ENGINEERS
21705 HIGHWAY 99
LYNWOOD, WA 98036

ENERGY CONSULTANT
REDWOOD ENERGY
1887 Q STREET
ARCATA, CA 95521

EMERALD CITY ENGINEERS, INC
21705 Highway 99
Lynnwood, WA 98036
TEL: 425-741-1200

REGISTERED PROFESSIONAL ENGINEER
ADAM C. FRANCIS
EXP 3-31-24
ELECTRICAL
STATE OF CALIFORNIA
03-20-23

ID	DATE	NAME
1	11/11/2022	PERMIT CONVENTIONAL
A	12/16/2022	BID SET
B	03/20/2023	BID ADDENDUM
2	03/20/2023	PLAN CHECK RESPONSE 2

Project:

EDUCATOR HOUSING
231 GRANT AVENUE

231 GRANT AVENUE
PALO ALTO, CA 94306

Client:
MERCY HOUSING/
ABODE COMMUNITIES

FIRST FLOOR PLAN WEST- POWER ENLARGED

JOB #: 2293-007
SCALE: AS NOTED

E3.01W

PLAN CHECK RESPONSE 2 | DATE: 03/20/2023

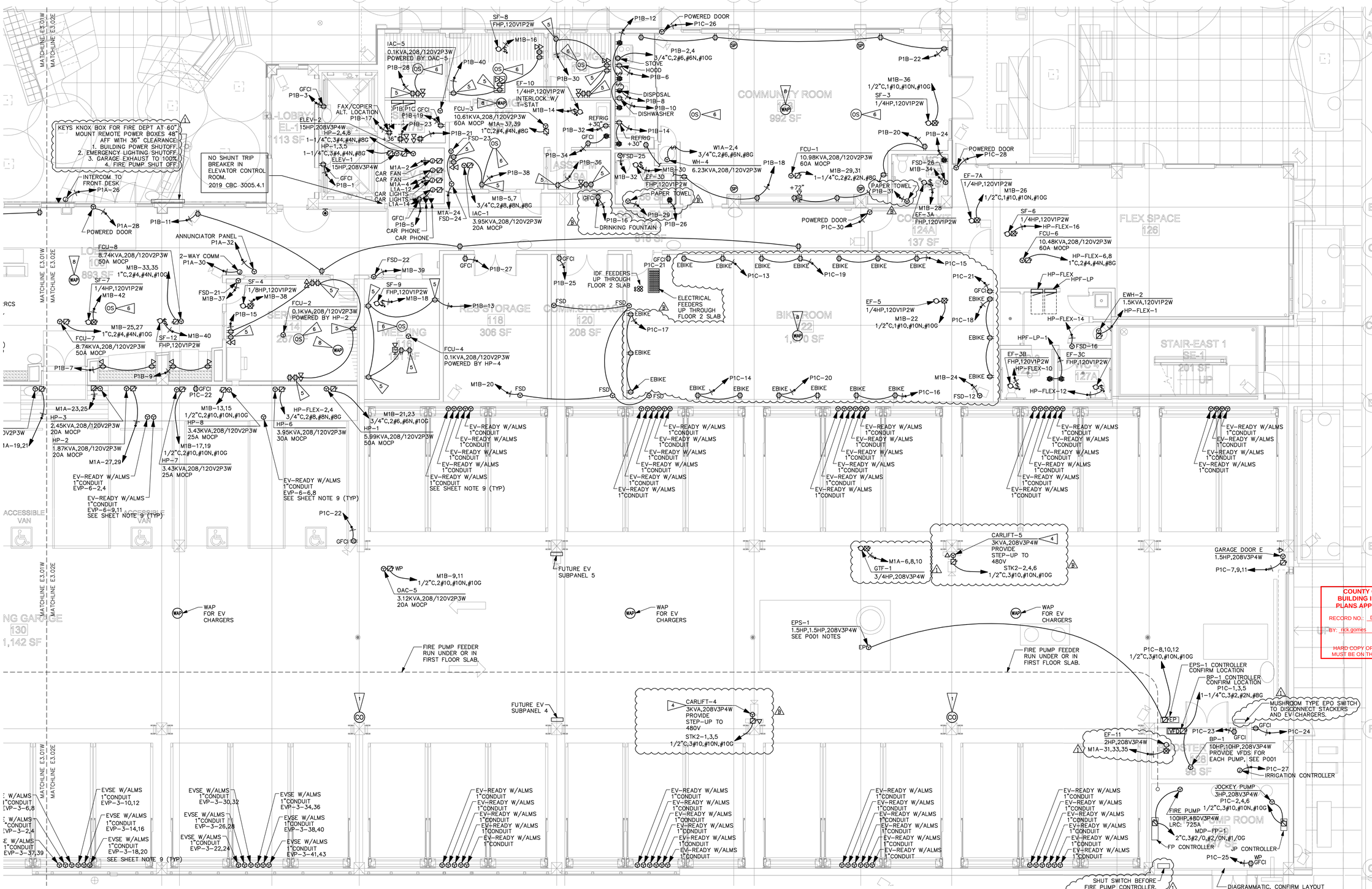

FLAG NOTES

1. CO SENSOR SYSTEM PROVIDED BY MECH. CONTRACTOR. PROVIDE CONDUIT, CONFIRM ALL ROUTING WITH MECH. CONTRACTOR PRIOR TO INSTALLATION. CONFIRM LOCATION OF HEADEND EQUIPMENT. REFER TO 9/E6.01.
2. PROVIDE A REMOTE CALL STATION FOR RESCUE ASSISTANCE 2-WAY COMMUNICATION DEVICE. REFER TO DETAIL 2/E6.01 FOR WIRING DIAGRAM.
3. HOT WATER CIRCULATION PUMPS WIRING, REFER TO DETAIL 4/E6.2 FOR AQUASTAT, PUMP LAG-LEAD CONTROLLER, AND HWCP WIRING.
4. CONFIRM VOLTAGE/PHASE AND OVERCURRENT PROTECTION REQUIREMENTS WITH SUBMITTAL PRIOR TO INSTALLATION.
5. CONTROLLED RECEPTACLE: IN KITCHENS, LOBBIES, & OFFICE/CONFERENCE SPACES, AN OCCUPANCY-SENSOR-CONTROLLED OUTLET MUST BE PROVIDED WITHIN 6' OF EACH REGULAR OUTLET. PROVIDE PERMANENT LABEL STATING "CONTROLLED RECEPTACLE".
6. OCCUPANCY SENSOR FOR CONTROLLED RECEPTACLES.
7. PROVIDE A REMOTE CALL STATION FOR RESCUE ASSISTANCE 2-WAY COMMUNICATION DEVICE. REFER TO DETAIL 2/E6.01 FOR WIRING DIAGRAM.
8. SEPARATE WIFI PROVIDED IN COMMON AREAS FOR STAFF AND TENANTS.
9. PROVIDE MANUAL SWITCH FOR LIGHTING CIRCUITS IN STAIRS, PARKING GARAGES, PUBLIC RESTROOMS, AND CORRIDORS (SEE PLANS FOR SPECIFIC CIRCUITRY). LOCATE SWITCH WITHIN CLOSE VICINITY TO THE PANEL FEEDING THE LIGHTING CIRCUIT. SWITCHES MAY BE NOT ACCESSIBLE TO UNAUTHORIZED PERSONNEL PER CEC 130.1(a)(2) (EXCEPTION 2). PROVIDE PERMANENT LABELS ANNOTATING AREA THE SWITCH CONTROLS.

START 1	START 2	PARKING GARAGE	CORRIDOR FLOOR 1	CORRIDOR FLOOR 2	CORRIDOR FLOOR 3	CORRIDOR FLOOR 4

SHEET NOTES

1. PROVIDE TAMPER RESISTANT RECEPTACLES THROUGHOUT PUBLIC SPACES.
2. WATER SUBMETER REPEATERS ARE TO BE LOCATED IN THE IDF CLOSETS, UTILIZING THE EXISTING POWER CIRCUITRY.
3. SUB-GRADE FLOOR MOUNTED SWITCHBOARDS SHALL BE SUPPORTED BY LESS THAN 2" CONCRETE BASE, TOP POSITION OF OVER-CURRENT DEVICES TO NOT EXCEED 6'7" ABOVE WORKING SPACE FLOOR AREA.
4. NO PIPING, DUCTS, OR EQUIPMENT FOREIGN TO ELECTRICAL EQUIPMENT SHALL BE PERMITTED TO BE LOCATED WITHIN THE THE VERTICAL 6' DEDICATED SPACE ABOVE THE ELECTRICAL EQUIPMENT. IF ABOVE 6', SHEET METAL DRIP PANS MAY BE USED IF APPROVED BY THE LOCAL AHJ.
5. POWER TO FIRE ALARM EQUIPMENT IS SHOWN FOR BIDDING PURPOSES ONLY. COORDINATE ALL FIRE ALARM POWER REQUIREMENTS WITH DESIGN/BUILD FIRE ALARM CONTRACTOR PRIOR TO ROUGH-IN.
6. OPEN EQUIPMENT DOORS SHALL NOT IMPEDE THE ENTRY TO OR EGRESS FROM THE WORKING SPACE.
7. ROOF CONDUITS NEED TO BE MINIMUM 7/8" OFF THE FINISHED ROOF.
8. OUTDOOR RECEPTACLES MUST BE "EXTRA DUTY".
9. EV READY STALLS: PRE-WIRE IN 1" CONDUIT, WIRE SIZE PER VOLTAGE DROP. WHEN EV CHARGERS ARE INSTALLED, AN AUTOMATED LOAD MANAGEMENT SYSTEM (ALMS) MUST BE PROVIDED. THE ALMS TO REDUCE EV CHARGERS TO 1.4KW EACH MINIMUM. TOTAL MAXIMUM DEMAND LIMITED TO 157KW (112 STALLS AT 1.4KW EACH) UNTIL A LOAD TEST STUDY CAN BE DONE AFTER THE BUILDING IS OPEN.
   SECTION 4.106.4.2.3: AUTOMATED LOAD MANAGEMENT SYSTEM SHALL BE ALLOWED TO MEET REQ. OF 4.106.4.2. (MINIMUM 1.4KW LOAD CAPACITY PER PARKING SPACE.)
10. EVSE: INSTALLED EV CHARGERS WITH ALMS SYSTEM, SEE ABOVE ALMS NOTES.
11. STEP-DOWN TRANSFORMERS SHOULD BE ISOLATED WITH CAPTIVE NEOPRENE MOUNTS AND CERTIFIED AT LEAST 10DB BELOW NEMA RATING. (ACOUSTICAL REQUIREMENT.)
12. ALL FIRE RATED EGRESS DOORS TO BE FIRE EXIT HARDWARE PER CBC 1010.1.10

LOW VOLTAGE SYSTEMS LEGEND:

- WAP — WIRELESS ACCESS POINT
- SP — SPEAKER

POWER ENLARGED

FIRST FLOOR EAST — 1 E3.02E

SCALE: 3/16" = 1'-0"

COPYRIGHT 2023, EMERALD CITY ENGINEERS, INC.
M:\2293-007 231 GRANT, PALO ALTO, CA\DWG\E302E FIRST FLOOR EAST - POWER ENLARGED.DWG 03-17-2023 11:44

VAN METER WILLIAMS POLLACK LLP
ARCHITECTURE | URBAN DESIGN ■ SAN FRANCISCO | DENVER | MINNEAPOLIS
333 Bryant Street, Suite 300, San Francisco, CA 94107 T 415.974.5252

CIVIL ENGINEER
BKF ENGINEERS
1730 N. FIRST ST SUITE 600
SAN JOSE, CA 95112

JOINT TRENCH / DRY UTILITIES
MILLENIUM DESIGN
PO BOX 737
ALAMO, CA 94507

LANDSCAPE ARCHITECT
PLURAL STUDIO
2742 17TH STREET
SAN FRANCISCO, CA 94110

STRUCTURAL ENGINEER
HOHBACH-LEWIN, INC
250 SHERIDAN AVE STE 100
PALO ALTO, CA 94306

MEP ENGINEER
EMERALD CITY ENGINEERS
21705 HIGHWAY 99
LYNWOOD, WA 98036

ENERGY CONSULTANT
REDWOOD ENERGY
1887 Q STREET
ARCATA, CA 95521

EMERALD CITY ENGINEERS, INC
21705 Highway 99
Lynnwood, WA 98036
TEL: 425-741-1200

REGISTERED PROFESSIONAL ENGINEER
ANN C. FRENCH
E-9421
EXP. 3-31-24
ELECTRICAL
STATE OF CALIFORNIA
03-20-23

COUNTY OF SANTA CLARA
BUILDING INSPECTION OFFICE
PLANS APPROVED FOR PERMIT
RECORD NO.: DEV22-1242
BY: rick.gomes Date: 07/28/2023
HARD COPY OF THESE STAMPED PLANS MUST BE ON THE SITE FOR INSPECTIONS

ID	DATE	NAME
1	11/11/2022	PERMIT CONVENTIONAL
A	12/16/2022	BID SET
B	03/20/2023	BID ADDENDUM
2	03/20/2023	PLAN CHECK RESPONSE 2

Project:

EDUCATOR HOUSING
231 GRANT AVENUE

231 GRANT AVENUE
PALO ALTO, CA 94306

Client:
MERCY HOUSING/
ABODE COMMUNITIES

FIRST FLOOR PLAN EAST - POWER ENLARGED

JOB #: 2293-007
SCALE: AS NOTED

E3.02E

PLAN CHECK RESPONSE 2 | DATE: 03/20/2023

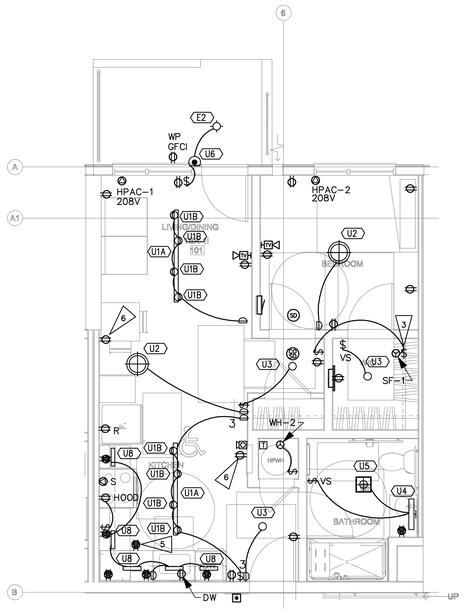

ELECTRICAL UNIT PLAN

1BR @ L1_1I MOBILITY (2) E4.01

SCALE: 1/4" = 1'-0"

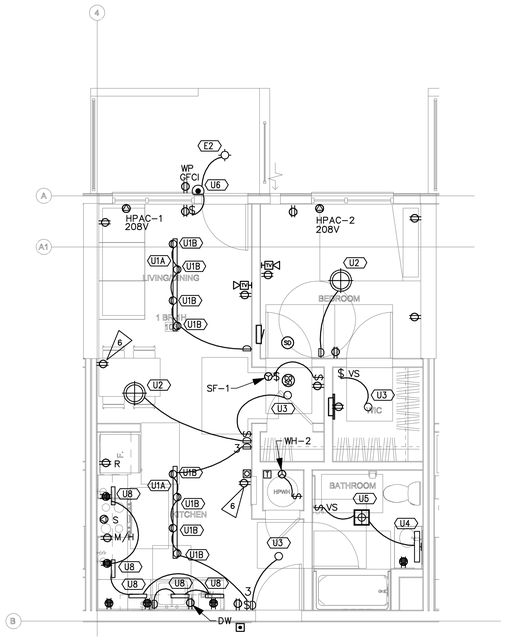

ELECTRICAL UNIT PLAN

1BR @ L1_1H (1) E4.01

SCALE: 1/4" = 1'-0"

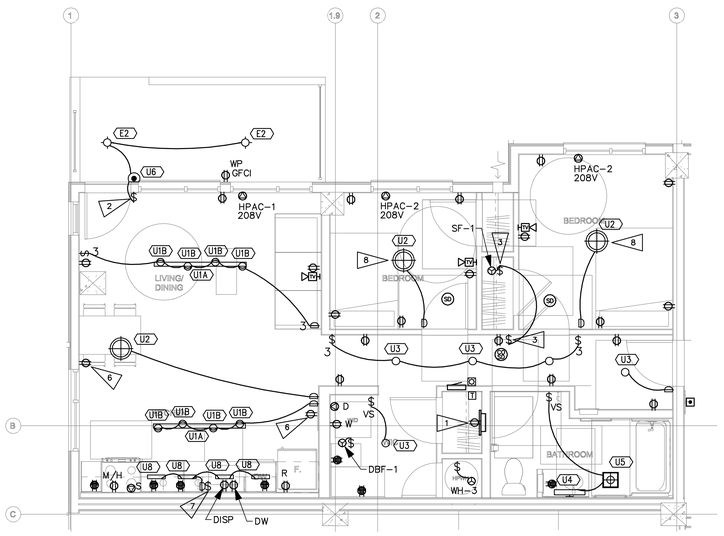

ELECTRICAL UNIT PLAN

2BR @ L1_2E (3) E4.01

SCALE: 1/4" = 1'-0"

UNIT MECHANICAL KEY

HPAC-1	HPAC-2
2.91KVA,208/120V2P3W 20A MOCP 2#12,#12N,#12G	2.08KVA,208/120V2P3W 15A MOCP 2#12,#12N,#12G

DEVICE KEY & WIRING LEGEND:

SYMBOL:	DEVICE NAME & INFO:	CKT & WIRE SIZE:	CIRCUITING NOTES:
S	STOVE	CKT-1,3 2#6,#8N,#10G	
M/H	MICROWAVE HOOD, +76"	CKT-5 1#12,#12N,#12G	AFCI/GFCI
DW	DISHWASHER, +20"	CKT-7 1#12,#12N,#12G	AFCI/GFCI
DISP	DISPOSAL, +20"	CKT-9 1#12,#12N,#12G	AFCI/GFCI
R	REFRIGERATOR, +30"	–	GROUP W/ SMALL APPLIANCE CKTS
D	CLOTHES DRYER, +30"	CKT-2,4 2#10,#10N,#10G	MANAGER'S UNIT ONLY
SF	SUPPLY FAN	CKT-15 1#14,#14N,#14G	AFCI. SEE SHEET NOTE #16.
W	CLOTHES WASHER, +30"	CKT-6 1#12,#12N,#12G	MANAGER'S UNIT ONLY, AFCI/GFCI
HPAC-#	EPHOCA PTAC (30A & 20A VERSION)	SEE PANEL SCHEDULE, 30A: 2#10,#10N,#10G 20A: 2#12,#12N,#12G	PROVIDED WITH PLUG & CORD. CONFIRM PLUG NEMA RATING & LOCATION WITH MANUFACTURER INSTALLATION GUIDE PRIOR TO INSTALL.
WH-2	HEAT PUMP WATER HEATER	CKT-2,4 (15A)2#12,#12N,#12G (30A)2,#10,#10N,#10G	PROVIDE LOCAL DISCONNECT FOR HEAT PUMP WATER HEATER NOT REQUIRED TO BE ACCESSIBLE PER CEC 404.8 EX:2
	BATH CKT:	1#12,#12N,#12G	CIRCUIT TO SERVE BATHROOM LIGHTING, FAN, & RECEPTACLE LOADS ONLY.
	BED CKT:	1#14,#14N,#14G 15A (AFCI)	CIRCUIT BEDROOM LIGHTING, RECEPTACLES, SMART BOX RECEPTACLE.
	LIVING CKT:	1#14,#14N,#14G 15A (AFCI)	CIRCUIT BEDROOM LIGHTING, RECEPTACLES, 120V SMOKE DETECTORS.
	KITCHEN CKT #1:	1#12,#12N,#12G (AFCI/GFCI)	CIRCUIT #1 SERVING THE KITCHEN COUNTER RECEPTACLES (INCLUDING REFRIGERATOR)
	KITCHEN CKT #2 (WITH DINING):	1#12,#12N,#12G (AFCI/GFCI)	KITCHEN CIRCUIT #2 SERVING THE KITCHEN COUNTER RECEPTACLES AND DINING RECEPTACLES.

ALL BRANCH CIRCUITS ARE COPPER.
TYPE III OR V BUILDINGS: ROMEX
TYPE I OR II BUILDINGS: MC CABLE

FLAG NOTES:

1. PROVIDE RECESSED SMART BOX WITH INTEGRAL DUPLEX RECEPTACLE. PROVIDE HOMERUNS TO NEAREST COMMUNICATIONS CLOSET. SEE 1/E6.01 FOR DETAILS.
2. PATIO LIGHT SWITCH TO BE ASTRONOMICAL TIMER BUILT INTO A SINGLE GANG JBOX (2016 T24 REQUIREMENT): LEVITON VPT24-1PZ. PROGRAM TO TURN ON/OFF AT SUNSET/SUNRISE.
3. SWITCH FOR SUPPLY FAN, SEE SHEET NOTE 16 BELOW.
4. NOT USED.
5. ADA UNITS WITH L-SHAPED KITCHENS ONLY: ACCESSIBLE RECEPTACLE TO BE MOUNTED WITHIN 12" OF COUNTERTOP SURFACE.
6. DINING ROOM RECEPTACLE CIRCUITED TO 'SMALL APPLIANCE KITCHEN BRANCH CIRCUIT' WITH AFCI PROTECTION, REFER TO PANEL SCHEDULE. GFCI PROVIDED BY CIRCUIT BREAKER.
7. PROVIDE SWITCH FOR DISPOSAL, LOCATE AT 44" TO TOP.
8. PROVIDE HEAVY DUTY METAL JBOX WITH SUPPORT ARMS CAPABLE OF SUPPORTING A PADDLE FAN. WESTINGHOUSE 0110000 OR EQUAL. PROVIDE 14/3 WIRING FROM SWITCH JBOX TO FAN.
9. PROVIDE SWITCH FOR HOOD, LOCATE AT 44" TO TOP.
10. COMMUNICATION UNIT ROOMS ONLY: FIRE ALARM SYSTEMS AND DOOR BELL TO HAVE VISUAL HORN/STROBE. MOUNT J-BOX @80" AFF ABOVE SWITCH.

SHEET NOTES:

GENERAL

1. ALL DWELLING UNIT RECEPTACLES TO BE TAMPER RESISTANT PER CEC 406.11.
2. REFER TO ARCHITECTURAL UNIT PLANS FOR DIMENSIONS OF CEILING LIGHTING FIXTURES.
3. GANG OUTLET DEVICES WHERE POSSIBLE.
4. SMOKE & COMBO SMOKE/CO DETECTORS IN UNITS, PHOTOELECTRIC TYPE, NOT IONIZING, 120V WITH BATTERY BACKUP, INTERCONNECTED WITHIN UNIT FOR COMMON ALARM, PER CODE. LOCATE MINIMUM 10FT AWAY FROM STOVES, 3FT AWAY FROM BATHROOM DOORS (WHERE POSSIBLE), 36" AWAY FROM PADDLE FANS AND TRANSFER FANS, 36" HORIZONTAL PATH FROM SUPPLY DIFFUSER.
5. WATER PROOF GFCI RECEPTACLES ARE REQUIRED AT ALL BALCONIES & GROUND/PODIUM PORCHES.
6. ALL UNITS: FIRE ALARM SYSTEM SHALL BE CAPABLE OF SUPPORTING VISUAL STROBE FIRE ALARM, REFER TO E00 DESIGN/BUILD FIRE ALARM NOTES.
7. MINI FIRE ALARM HORN PART OF BUILDING FIRE ALARM SYSTEM WITH LOW FREQUENCY SOUNDER BASES.
8. LOOPS OR SWTCHGROUPS INDICATE LIGHT FIXTURES (&/OR RECEPTACLES) CONTROLLED BY SWITCH.

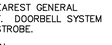

9. WATER SUBMETER REMOTE DISPLAY READERS TO BE MOUNTED AT +48" AFF TO TOP, REFER TO PLUMBING PLANS FOR LOCATION. DEVICE PROVIDED BY PLUMBING CONTRACTOR, ELECTRICAL CONTRACTOR TO PROVIDE ALL NECESSARY WIRING AND INSTALLATION.
10. DRYER BOOSTER FANS (DBF) PROVIDED WITH OWN AIR PRESSURE SENSOR, PROVIDE 120V EQUIPMENT CONNECTION.
11. PANCAKE BOXES SHOULD BE PROVIDED IN LOCATIONS WHERE STRUCTURAL HOLD DOWNS PREVENT RECEPTACLE/SWITCH PLACEMENTS AS PRESCRIBED PER CODE.
12. PROVIDE GFCI RECEPTACLES WITHIN 6-FT OF ALL SINKS, INCLUDING THE KITCHEN SINK.
13. AFCI PROTECTION: REQUIRES THE MAXIMUM LENGTH OF BRANCH CIRCUIT WIRING FROM THE OVERCURRENT DEVICE TO THE FIRST OUTLET SHALL NOT EXCEED 50-FT FOR #14 AWG OR 70-FT FOR #12 AWG. THE FIRST OUTLET BOX IN THE BRANCH CIRCUIT SHALL BE MARKED TO INDICATE THAT IT IS THE FIRST OUTLET OF THE CIRCUIT "AFCI FIRST OUTLET".
14. LOAD CENTERS TO BE MOUNTED 48" AFF TO TOP OF TOP CIRCUIT BREAKER.
15. T24 2019: ALL RECESSED LIGHTS AND FAN/LIGHT COMBOS TO BE SEALED WITH A GASKET OR CAULK BETWEEN THE LUMINAIRE HOUSING AND CEILING, AND SHALL HAVE ALL AIR LEAK PATHS BETWEEN CONDITIONED AND UNCONDITIONED SPACES SEALED WITH A GASKET OR CAULK.
16. SUPPLY FAN SF-1: LOCATE LOCAL DISCONNECT SWITCH ABOVE CEILING ACCESSIBLE VIA ACCESS PANEL. IN ADDITION, PROVIDE SHUTOFF SWITCH IN A READILY ACCESSIBLE LOCATION WITH THE FOLLOWING PERMANENT PLAQUE:
"THIS SWITCH CONTROLS THE INDOOR AIR QUALITY VENTILATION FOR THE APARTMENT UNIT, LEAVE IT ON UNLESS THE OUTDOOR AIR QUALITY IS VERY POOR".
17. BACK TO BACK OUTLETS: WHERE OUTLETS ARE ON OPPOSITE SIDES OF SOUND RATED PARTITIONS, SEPARATION OF 16" RECOMMENDED, 12" MINIMUM; EXPOSED BACKS AND SIDES SHOULD BE TREATED WITH PUTTY PADS. IF NOT POSSIBLE DUE TO REQUIRED OUTLETS PER CEC, A GYPSUM BOARD OR SHEET METAL BACKER PLATE (MIN. 20"H X WIDTH OF STUD BAY) CENTERED BEHIND THE OUTLET IS REQUIRED. (ACOUSTICAL REQUIREMENT.)

KITCHEN

K1. KITCHEN RECEPTACLES & SWITCHES MOUNTED A MAXIMUM HEIGHT OF +44" AFF TO THE TOP OF DEVICE. REFER TO ARCHITECTURAL ELEVATIONS FOR EXACT HEIGHT AND MOUNTING.

K2. ON RAISED KITCHEN BARTOP, MOUNT HORIZONTALLY AT +43" AFF TO TOP OF BOX.

K3. L-SHAPED KITCHENS: ONE OUTLET MUST BE LOCATED A MINIMUM 36" FROM THE OUTSIDE OF THE CORNER FOR ACCESSIBILITY.

K4. PROVIDE GFCI/AFCI COMBINATION CIRCUIT BREAKERS FOR ALL RECEPTACLES LOCATED WITHIN 6-FT OF A KITCHEN SINK, THIS APPLIES TO KITCHEN APPLIANCE RECEPTACLES.

BATHROOM

B1. RESTROOM EXHAUST LIGHT/FAN – U5/M3:
PANASONIC WHISPERGREEN EXHAUST FAN HAS LOW AND HIGH SETTING, SEE MECHANICAL SCHEDULE FOR EF-1. LOW SETTING ON 24/7. HIGH SETTING TO BE CONTROLLED BY INTEGRAL HUMIDISTAT & INTEGRAL MOTION SENSOR. COORDINATE ALL WIRING WITH INSTALLATION MANUAL. LIGHT TO BE CONTROLLED BY VACANCY SWITCH.

B2. BATHROOM: RECEPTACLE AND SWITCH TO BE 46" AFF TO TOP OF THE BOX.

B3. BATHROOM SWITCHING: FIRST SWITCH (VACANCY) IS TO CONTROL LIGHT IN THE FAN/LIGHT COMBO AND THE VANITY LIGHT.

DOORBELL SCHEDULE:

DOORBELL 120V POWER TO BE FROM NEAREST GENERAL PURPOSE LIGHTING/RECEPTACLE CIRCUIT. DOORBELL SYSTEM TO BE CAPABLE OF ADDING A VISUAL STROBE.

- DOORBELL PUSH-BUTTON:
  MODEL: NUTONE #P841LSN
  CONFIRM FINISH WITH ARCH.
  MOUNTING: +48" TO TOP
- DOORBELL TRANSFORMER:
  MODEL: NUTONE #C905
  MOUNTING: LOCATED IN CLOSET
- DOORBELL CHIME:
  MODEL: NUTONE #LA11WH
  MOUNTING: +80" TO BOTTOM

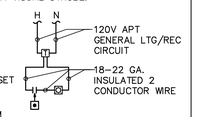

ACCESSIBLE AND COMMUNICATION UNITS:
PROVIDE VISUAL AND AUDIBLE ALARMS
- DOORBELL & STROBE: EDWARDS 6536-G5
- TRANSFORMER: EDWARDS 592
- PUSHBUTTON: EDWARDS 620/147-10
- (147-10 NAMEPLATE: "HOLD BUTTON FOR 5 SECONDS")

VAN METER WILLIAMS POLLACK LLP
ARCHITECTURE | URBAN DESIGN ■ SAN FRANCISCO | DENVER | MINNEAPOLIS
333 Bryant Street, Suite 300, San Francisco, CA 94107 T 415.974.5252

CIVIL ENGINEER
BKF ENGINEERS
1730 N. FIRST ST SUITE 600
SAN JOSE, CA 95112

JOINT TRENCH / DRY UTILITIES
MILLENIUM DESIGN
PO BOX 737
ALAMO, CA 94507

LANDSCAPE ARCHITECT
PLURAL STUDIO
2742 17TH STREET
SAN FRANCISCO, CA 94110

STRUCTURAL ENGINEER
HOHBACH-LEWIN, INC
250 SHERIDAN AVE STE 100
PALO ALTO, CA 94306

MEP ENGINEER
EMERALD CITY ENGINEERS
21705 HIGHWAY 99
LYNWOOD, WA 98036

ENERGY CONSULTANT
REDWOOD ENERGY
1887 Q STREET
ARCATA, CA 95521

EMERALD CITY ENGINEERS, INC
21705 Highway 99
Lynnwood, WA 98036
TEL: 425-741-1200

REGISTERED PROFESSIONAL ENGINEER
ADAM C. FRENCH
E19421
EXP: 3-31-23
ELECTRICAL
STATE OF CALIFORNIA

03-20-23

COUNTY OF SANTA CLARA
BUILDING INSPECTION OFFICE
APPROVED FOR PERMIT
BY: DEV22-1242
Date: 07/28/2023
HARD COPY OF THESE STAMPED PLANS TO BE KEPT ON THE SITE FOR INSPECTIONS

ID	DATE	NAME
1	11/11/2022	PERMIT CONVENTIONAL
A	12/16/2022	BID SET
B	03/20/2023	BID ADDENDUM
2	03/20/2023	PLAN CHECK RESPONSE 2

Project:

EDUCATOR HOUSING
231 GRANT AVENUE

231 GRANT AVENUE
PALO ALTO, CA 94306

Client:

MERCY HOUSING/
ABODE COMMUNITIES

UNIT PLANS

JOB #: 2293-007
SCALE: AS NOTED

E4.01

PLAN CHECK RESPONSE 2 | DATE: 03/20/2023

COPYRIGHT 2023, EMERALD CITY ENGINEERS, INC.
M:\LATTON J\2293-007 231 GRANT, PALO ALTO, CA\DWG\E401 UNIT PLANS.DWG 03-17-2023 11:44

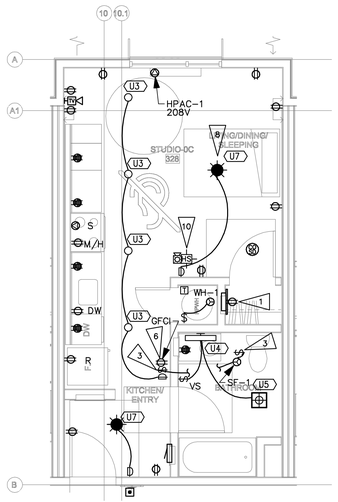

ELECTRICAL UNIT PLAN

STUDIO–0C HVI (3) E4.02

SCALE: 1/4" = 1'-0"

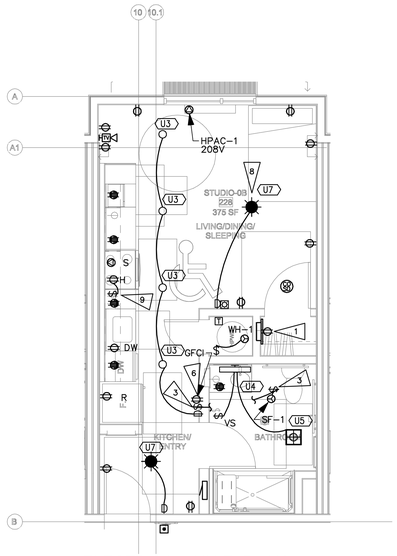

ELECTRICAL UNIT PLAN

STUDIO–0B MOBILITY (2) E4.02

SCALE: 1/4" = 1'-0"

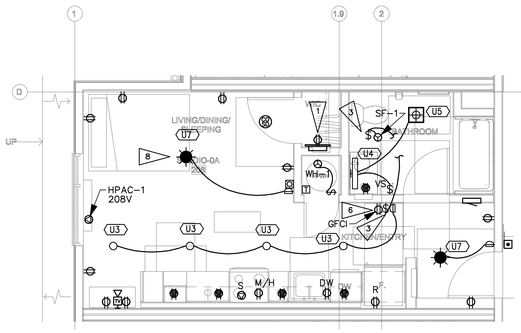

ELECTRICAL UNIT PLAN

STUDIO–0A (1) E4.02

SCALE: 1/4" = 1'-0"

UNIT MECHANICAL KEY

HPAC–1	HPAC–2
2.91KVA,208/120V2P3W 20A MOCP 2#12,#12N,#12G	2.08KVA,208/120V2P3W 15A MOCP 2#12,#12N,#12G

DEVICE KEY & WIRING LEGEND:

SYMBOL:	DEVICE NAME & INFO:	CKT & WIRE SIZE:	CIRCUITING NOTES:
S	STOVE	CKT–1,3 2#8,#8N,#10G	
M/H	MICROWAVE HOOD, +76"	CKT–5 1#12,#12N,#12G	AFCI/GFCI
DW	DISHWASHER, +20"	CKT–7 1#12,#12N,#12G	AFCI/GFCI
DISP	DISPOSAL, +20"	CKT–9 1#12,#12N,#12G	AFCI/GFCI
R	REFRIGERATOR, +30"	–	GROUP W/ SMALL APPLIANCE CKTS
D	CLOTHES DRYER, +30"	CKT–2,4 2#10,#10N,#10G	MANAGER'S UNIT ONLY
SF	SUPPLY FAN	CKT–15 1#14,#14N,#14G	AFCI. SEE SHEET NOTE #16.
W	CLOTHES WASHER, +30"	CKT–6 1#12,#12N,#12G	MANAGER'S UNIT ONLY, AFCI/GFCI
HPAC–#	EPHOCA PTAC (30A & 20A VERSION)	SEE PANEL SCHEDULE. 30A: 2#10,#10N,#10G 20A: 2#12,#12N,#12G	PROVIDED WITH PLUG & CORD. CONFIRM PLUG NEMA RATING & LOCATION WITH MANUFACTURER INSTALLATION GUIDE PRIOR TO INSTALL.
WH–2	HEAT PUMP WATER HEATER	CKT–2,4 (15A)2#12,#12N,#12G (30A)2,#10,#10N,#10G	PROVIDE LOCAL DISCONNECT FOR HEAT PUMP WATER HEATER NOT REQUIRED TO BE ACCESSIBLE PER CEC 404.8 EX:2
	BATH CKT:	1#12,#12N,#12G	CIRCUIT TO SERVE BATHROOM LIGHTING, FAN, & RECEPTACLE LOADS ONLY.
	BED CKT:	1#14,#14N,#14G 15A (AFCI)	CIRCUIT BEDROOM LIGHTING, RECEPTACLES, SMART BOX RECEPTACLE.
	LIVING CKT:	1#14,#14N,#14G 15A (AFCI)	CIRCUIT BEDROOM LIGHTING, RECEPTACLES, 120V SMOKE DETECTORS.
	KITCHEN CKT #1:	1#12,#12N,#12G (AFCI/GFCI)	CIRCUIT #1 SERVING THE KITCHEN COUNTER RECEPTACLES (INCLUDING REFRIGERATOR)
	KITCHEN CKT #2 (WITH DINING):	1#12,#12N,#12G (AFCI/GFCI)	KITCHEN CIRCUIT #2 SERVING THE KITCHEN COUNTER RECEPTACLES AND DINING RECEPTACLES.

ALL BRANCH CIRCUITS ARE COPPER.
TYPE III OR V BUILDINGS: ROMEX
TYPE I OR II BUILDINGS: MC CABLE

FLAG NOTES:

1. PROVIDE RECESSED SMART BOX WITH INTEGRAL DUPLEX RECEPTACLE. PROVIDE HOMERUNS TO NEAREST COMMUNICATIONS CLOSET. SEE 1/E6.01 FOR DETAILS.
2. PATIO LIGHT SWITCH TO BE ASTRONOMICAL TIMER BUILT INTO A SINGLE GANG JBOX (2016 T24 REQUIREMENT): LEVITON VPT24–1PZ. PROGRAM TO TURN ON/OFF AT SUNSET/SUNRISE.
3. SWITCH FOR SUPPLY FAN, SEE SHEET NOTE 16 BELOW.
4. NOT USED.
5. ADA UNITS WITH L–SHAPED KITCHENS ONLY: ACCESSIBLE RECEPTACLE TO BE MOUNTED WITHIN 12" OF COUNTERTOP SURFACE.
6. DINING ROOM RECEPTACLE CIRCUITED TO 'SMALL APPLIANCE KITCHEN BRANCH CIRCUIT' WITH AFCI PROTECTION, REFER TO PANEL SCHEDULE. GFCI PROVIDED BY CIRCUIT BREAKER.
7. PROVIDE SWITCH FOR DISPOSAL, LOCATE AT 44" TO TOP.
8. PROVIDE HEAVY DUTY METAL JBOX WITH SUPPORT ARMS CAPABLE OF SUPPORTING A PADDLE FAN. WESTINGHOUSE 0110000 OR EQUAL. PROVIDE 14/3 WIRING FROM SWITCH JBOX TO FAN.
9. PROVIDE SWITCH FOR HOOD, LOCATE AT 44" TO TOP.
10. COMMUNICATION UNIT ROOMS ONLY: FIRE ALARM SYSTEMS AND DOOR BELL TO HAVE VISUAL HORN/STROBE. MOUNT J–BOX @80" AFF ABOVE SWITCH. (HS)

SHEET NOTES:

GENERAL

1. ALL DWELLING UNIT RECEPTACLES TO BE TAMPER RESISTANT PER CEC 406.11.
2. REFER TO ARCHITECTURAL UNIT PLANS FOR DIMENSIONS OF CEILING LIGHTING FIXTURES.
3. GANG OUTLET DEVICES WHERE POSSIBLE.
4. SMOKE & COMBO SMOKE/CO DETECTORS IN UNITS, PHOTOELECTRIC TYPE, NOT IONIZING, 120V WITH BATTERY BACKUP, INTERCONNECTED WITHIN UNIT FOR COMMON ALARM, PER CODE. LOCATE MINIMUM 10FT AWAY FROM STOVES, 3FT AWAY FROM BATHROOM DOORS (WHERE POSSIBLE), 36" AWAY FROM PADDLE FANS AND TRANSFER FANS, 36" HORIZONTAL PATH FROM SUPPLY DIFFUSER.
5. WATER PROOF GFCI RECEPTACLES ARE REQUIRED AT ALL BALCONIES & GROUND/PODIUM PORCHES.
6. ALL UNITS: FIRE ALARM SYSTEM SHALL BE CAPABLE OF SUPPORTING VISUAL STROBE FIRE ALARM, REFER TO E00 DESIGN/BUILD FIRE ALARM NOTES.
7. MINI FIRE ALARM HORN PART OF BUILDING FIRE ALARM SYSTEM WITH LOW FREQUENCY SOUNDER BASES.
8. LOOPS OR SWITCHGROUPS INDICATE LIGHT FIXTURES (&/OR RECEPTACLES) CONTROLLED BY SWITCH.
9. WATER SUBMETER REMOTE DISPLAY READERS TO BE MOUNTED AT +48" AFF TO TOP, REFER TO PLUMBING PLANS FOR LOCATION. DEVICE PROVIDED BY PLUMBING CONTRACTOR, ELECTRICAL CONTRACTOR TO PROVIDE ALL NECESSARY WIRING AND INSTALLATION.
10. DRYER BOOSTER FANS (DBF) PROVIDED WITH OWN AIR PRESSURE SENSOR, PROVIDE 120V EQUIPMENT CONNECTION.
11. PANCAKE BOXES SHOULD BE PROVIDED IN LOCATIONS WHERE STRUCTURAL HOLD DOWNS PREVENT RECEPTACLE/SWITCH PLACEMENTS AS PRESCRIBED PER CODE.
12. PROVIDE GFCI RECEPTACLES WITHIN 6–FT OF ALL SINKS, INCLUDING THE KITCHEN SINK.
13. AFCI PROTECTION: REQUIRES THE MAXIMUM LENGTH OF BRANCH CIRCUIT WIRING FROM THE OVERCURRENT DEVICE TO THE FIRST OUTLET SHALL NOT EXCEED 50–FT FOR #14 AWG OR 70–FT FOR #12 AWG. THE FIRST OUTLET BOX IN THE BRANCH CIRCUIT SHALL BE MARKED TO INDICATE THAT IT IS THE FIRST OUTLET OF THE CIRCUIT "AFCI FIRST OUTLET".
14. LOAD CENTERS TO BE MOUNTED 48" AFF TO TOP OF TOP CIRCUIT BREAKER.
15. T24 2019: ALL RECESSED LIGHTS AND FAN/LIGHT COMBOS TO BE SEALED WITH A GASKET OR CAULK BETWEEN THE LUMINAIRE HOUSING AND CEILING, AND SHALL HAVE ALL AIR LEAK PATHS BETWEEN CONDITIONED AND UNCONDITIONED SPACES SEALED WITH A GASKET OR CAULK.
16. SUPPLY FAN SF–1: LOCATE LOCAL DISCONNECT IN ATTIC SPACE CEILING ACCESSIBLE VIA ACCESS PANEL. IN ADDITION, PROVIDE SHUTOFF SWITCH IN A READILY ACCESSIBLE LOCATION WITH THE FOLLOWING PERMANENT PLAQUE:
"THIS SWITCH CONTROLS THE INDOOR AIR QUALITY VENTILATION FOR THE APARTMENT UNIT, LEAVE IT ON UNLESS THE OUTDOOR AIR QUALITY IS VERY POOR".
17. BACK TO BACK OUTLETS: WHERE OUTLETS ARE ON OPPOSITE SIDES OF SOUND RATED PARTITIONS, SEPARATION OF 16" RECOMMENDED, 12" MINIMUM; EXPOSED BACKS AND SIDES SHOULD BE TREATED WITH PUTTY PADS. IF NOT POSSIBLE DUE TO REQUIRED OUTLETS PER CEC, A GYPSUM BOARD OR SHEET METAL BACKER PLATE (MIN. 20"H X WIDTH OF STUD BAY) CENTERED BEHIND THE OUTLET IS REQUIRED. (ACOUSTICAL REQUIREMENT.)

KITCHEN

K1. KITCHEN RECEPTACLES & SWITCHES MOUNTED A MAXIMUM HEIGHT OF +44" AFF TO THE TOP OF DEVICE. REFER TO ARCHITECTURAL ELEVATIONS FOR EXACT HEIGHT AND MOUNTING.

K2. ON RAISED KITCHEN BARTOP, MOUNT HORIZONTALLY AT +43" AFF TO TOP OF BOX.

K3. L–SHAPED KITCHENS: ONE OUTLET MUST BE LOCATED A MINIMUM 36" FROM THE OUTSIDE OF THE CORNER FOR ACCESSIBILITY.

K4. PROVIDE GFCI/AFCI COMBINATION CIRCUIT BREAKERS FOR ALL RECEPTACLES LOCATED WITHIN 6–FT OF A KITCHEN SINK, THIS APPLIES TO KITCHEN APPLIANCE RECEPTACLES.

BATHROOM

B1. RESTROOM EXHAUST LIGHT/FAN – U5/M3: PANASONIC WHISPERGREEN EXHAUST FAN HAS LOW AND HIGH SETTING, SEE MECHANICAL SCHEDULE FOR EF–1. LOW SETTING ON 24/7. HIGH SETTING TO BE CONTROLLED BY INTEGRAL HUMIDISTAT & INTEGRAL MOTION SENSOR. COORDINATE ALL WIRING WITH INSTALLATION MANUAL. LIGHT TO BE CONTROLLED BY VACANCY SWITCH.

B2. BATHROOM: RECEPTACLE AND SWITCH TO BE 46" AFF TO TOP OF THE BOX.

B3. BATHROOM SWITCHING: FIRST SWITCH (VACANCY) IS TO CONTROL LIGHT IN THE FAN/LIGHT COMBO AND THE VANITY LIGHT.

DOORBELL SCHEDULE:

DOORBELL 120V POWER TO BE FROM NEAREST GENERAL PURPOSE LIGHTING/RECEPTACLE CIRCUIT. DOORBELL SYSTEM TO BE CAPABLE OF ADDING A VISUAL STROBE.

- DOORBELL PUSH–BUTTON:
  MODEL: NUTONE #PB41LSN
  CONFIRM FINISH WITH ARCH.
  MOUNTING: +48" TO TOP
- DOORBELL TRANSFORMER:
  MODEL: NUTONE #2305
  MOUNTING: LOCATED IN CLOSET
- DOORBELL CHIME:
  MODEL: NUTONE #LA11WH
  MOUNTING: +80" TO BOTTOM

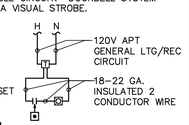

ACCESSIBLE AND COMMUNICATION UNITS:
PROVIDE VISUAL AND AUDIBLE ALARMS
- DOORBELL & STROBE: EDWARDS 6536–G5
- TRANSFORMER: EDWARDS 592
- PUSHBUTTON: EDWARDS 620/147–10
- (147–10 NAMEPLATE: "HOLD BUTTON FOR 5 SECONDS")

ACCEPTED BY SANTA CLARA
BUILDING INSPECTION OFFICE
PLANS APPROVED FOR PERMIT
PERMIT NUMBER: BLD2023-04242
BY: nick.gomes Date: 07/28/2023
HARD COPY OF THESE STAMPED PLANS
MUST BE ON THE SITE FOR INSPECTIONS

VAN METER WILLIAMS POLLACK LLP
ARCHITECTURE | URBAN DESIGN ■ SAN FRANCISCO | DENVER | MINNEAPOLIS
333 Bryant Street, Suite 300, San Francisco, CA 94107 T 415.974.5352

CIVIL ENGINEER
BKF ENGINEERS
1730 N. FIRST ST SUITE 600
SAN JOSE, CA 95112

JOINT TRENCH / DRY UTILITIES
MILLENIUM DESIGN
PO BOX 737
ALAMO, CA 94507

LANDSCAPE ARCHITECT
PLURAL STUDIO
2742 17TH STREET
SAN FRANCISCO, CA 94110

STRUCTURAL ENGINEER
HOHBACH-LEWIN, INC
250 SHERIDAN AVE STE 100
PALO ALTO, CA 94306

MEP ENGINEER
EMERALD CITY ENGINEERS
21705 HIGHWAY 99
LYNWOOD, WA 98036

ENERGY CONSULTANT
REDWOOD ENERGY
1887 Q STREET
ARCATA, CA 95521

EMERALD CITY ENGINEERS, INC
21705 Highway 99
Lynnwood, WA 98036
TEL: 425-741-1200

REGISTERED PROFESSIONAL ENGINEER
ADAM C. FRINK
EXP. 3-31-24
ELECTRICAL
STATE OF CALIFORNIA
03-20-23

ID	DATE	NAME
1	11/11/2022	PERMIT CONVENTIONAL
A	12/16/2022	BID SET
B	03/20/2023	BID ADDENDUM
2	03/20/2023	PLAN CHECK RESPONSE 2

Project:

EDUCATOR HOUSING
231 GRANT AVENUE

231 GRANT AVENUE
PALO ALTO, CA 94306

Client:

MERCY HOUSING/
ABODE COMMUNITIES

UNIT PLANS

JOB #: 2293-007
SCALE: AS NOTED

E4.02

PLAN CHECK RESPONSE 2 | DATE: 03/20/2023

COPYRIGHT 2023, EMERALD CITY ENGINEERS, INC.
XCLATION J:\2293-007 231 GRANT, PALO ALTO, CA\DWG\E402 UNIT PLANS.DWG 03-17-2023 11:44

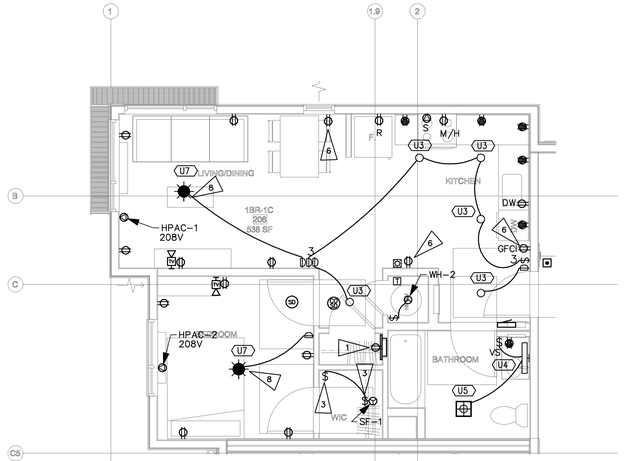

ELECTRICAL UNIT PLAN

1BR–1C CORNER (3 / E4.03)

SCALE: 1/4" = 1'-0"

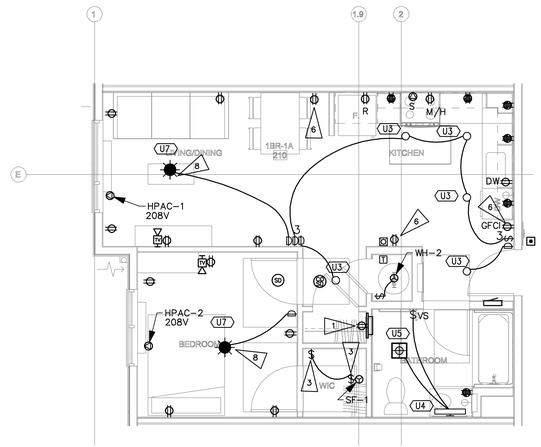

ELECTRICAL UNIT PLAN

1BR–1A (1 / E4.03)

SCALE: 1/4" = 1'-0"

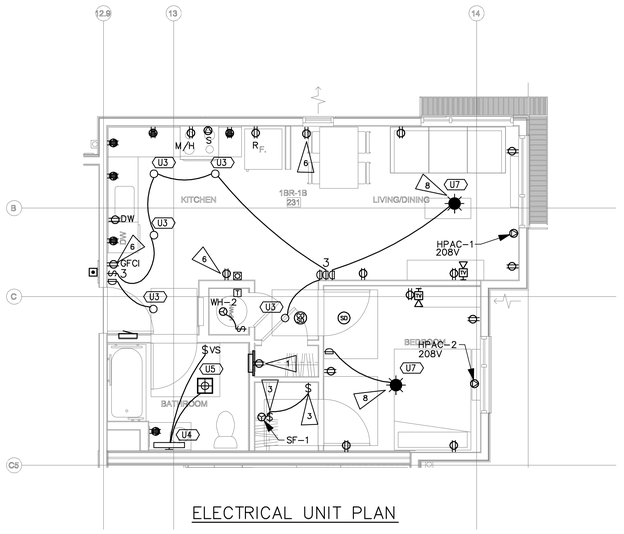

ELECTRICAL UNIT PLAN

1BR–1B CORNER (2 / E4.03)

SCALE: 1/4" = 1'-0"

UNIT MECHANICAL KEY

HPAC–1
2.91KVA,208/120V2P3W
20A MOCP
2#12,#12N,#12G

HPAC–2
2.08KVA,208/120V2P3W
15A MOCP
2#12,#12N,#12G

DEVICE KEY & WIRING LEGEND:

SYMBOL:	DEVICE NAME & INFO:	CKT & WIRE SIZE:	CIRCUITING NOTES:
S	STOVE	CKT–1,3 2#8,#8N,#10G	
M/H	MICROWAVE HOOD, +76"	CKT–5 1#12,#12N,#12G	AFCI/GFCI
DW	DISHWASHER, +20"	CKT–7 1#12,#12N,#12G	AFCI/GFCI
DISP	DISPOSAL, +20"	CKT–9 1#12,#12N,#12G	AFCI/GFCI
R	REFRIGERATOR, +30"	–	GROUP W/ SMALL APPLIANCE CKTS
D	CLOTHES DRYER, +30"	CKT–2,4 2#10,#10N,#10G	MANAGER'S UNIT ONLY
SF	SUPPLY FAN	CKT–15 1#14,#14N,#14G	AFCI. SEE SHEET NOTE #16.
W	CLOTHES WASHER, +30"	CKT–6 1#12,#12N,#12G	MANAGER'S UNIT ONLY, AFCI/GFCI
HPAC–#	EPHOCA PTAC (30A & 20A VERSION)	SEE PANEL SCHEDULE. 30A: 2#10,#10N,#10G 20A: 2#12,#12N,#12G	PROVIDED WITH PLUG & CORD. CONFIRM PLUG NEMA RATING & LOCATION WITH MANUFACTURER INSTALLATION GUIDE PRIOR TO INSTALL.
WH–2	HEAT PUMP WATER HEATER	CKT–2,4 (15A)2#12,#12N,#12G (30A)2,#10,#10N,#10G	PROVIDE LOCAL DISCONNECT FOR HEAT PUMP WATER HEATER NOT REQUIRED TO BE ACCESSIBLE PER CEC 404.8 EX:2
	BATH CKT:	1#12,#12N,#12G	CIRCUIT TO SERVE BATHROOM LIGHTING, FAN, & RECEPTACLE LOADS ONLY.
	BED CKT:	1#14,#14N,#14G 15A (AFCI)	CIRCUIT BEDROOM LIGHTING, RECEPTACLES, SMART BOX RECEPTACLE.
	LIVING CKT:	1#14,#14N,#14G 15A (AFCI)	CIRCUIT BEDROOM LIGHTING, RECEPTACLES, 120V SMOKE DETECTORS.
	KITCHEN CKT #1:	1#12,#12N,#12G (AFCI/GFCI)	CIRCUIT #1 SERVING THE KITCHEN COUNTER RECEPTACLES (INCLUDING REFRIGERATOR)
	KITCHEN CKT #2 (WITH DINING):	1#12,#12N,#12G (AFCI/GFCI)	KITCHEN CIRCUIT #2 SERVING THE KITCHEN COUNTER RECEPTACLES AND DINING RECEPTACLES.

ALL BRANCH CIRCUITS ARE COPPER.
TYPE III OR V BUILDINGS: ROMEX
TYPE I OR II BUILDINGS: MC CABLE

FLAG NOTES:

1. PROVIDE RECESSED SMART BOX WITH INTEGRAL DUPLEX RECEPTACLE. PROVIDE HOMERUNS TO NEAREST COMMUNICATIONS CLOSET. SEE 1/E6.01 FOR DETAILS.
2. PATIO LIGHT SWITCH TO BE ASTRONOMICAL TIMER BUILT INTO A SINGLE GANG JBOX (2016 T24 REQUIREMENT): LEVITON VPT24–1PZ. PROGRAM TO TURN ON/OFF AT SUNSET/SUNRISE.
3. SWITCH FOR SUPPLY FAN, SEE SHEET NOTE 16 BELOW.
4. NOT USED.
5. ADA UNITS WITH L–SHAPED KITCHENS ONLY: ACCESSIBLE RECEPTACLE TO BE MOUNTED WITHIN 12" OF COUNTERTOP SURFACE.
6. DINING ROOM RECEPTACLE CIRCUITED TO 'SMALL APPLIANCE KITCHEN BRANCH CIRCUIT' WITH AFCI PROTECTION, REFER TO PANEL SCHEDULE. GFCI PROVIDED BY CIRCUIT BREAKER.
7. PROVIDE SWITCH FOR DISPOSAL, LOCATE AT 44" TO TOP.
8. PROVIDE HEAVY DUTY METAL JBOX WITH SUPPORT ARMS CAPABLE OF SUPPORTING A PADDLE FAN. WESTINGHOUSE 0110000 OR EQUAL. PROVIDE 14/3 WIRING FROM SWITCH JBOX TO FAN.
9. PROVIDE SWITCH FOR HOOD, LOCATE AT 44" TO TOP.
10. COMMUNICATION UNIT ROOMS ONLY: FIRE ALARM SYSTEMS AND DOOR BELL TO HAVE VISUAL HORN/STROBE. MOUNT J–BOX @80" AFF ABOVE SWITCH. (HS)

SHEET NOTES:

GENERAL

1. ALL DWELLING UNIT RECEPTACLES TO BE TAMPER RESISTANT PER CEC 406.11.
2. REFER TO ARCHITECTURAL UNIT PLANS FOR DIMENSIONS OF CEILING LIGHTING FIXTURES.
3. GANG OUTLET DEVICES WHERE POSSIBLE.
4. SMOKE & COMBO SMOKE/CO DETECTORS IN UNITS, PHOTOELECTRIC TYPE, NOT IONIZING, 120V WITH BATTERY BACKUP, INTERCONNECTED WITHIN UNIT FOR COMMON ALARM, PER CODE. LOCATE MINIMUM 10FT AWAY FROM STOVES, 3FT AWAY FROM BATHROOM DOORS (WHERE POSSIBLE), 36" AWAY FROM PADDLE FANS AND TRANSFER FANS, 36" HORIZONTAL PATH FROM SUPPLY DIFFUSER.
5. WATER PROOF GFCI RECEPTACLES ARE REQUIRED AT ALL BALCONIES & GROUND/PODIUM PORCHES.
6. ALL UNITS: FIRE ALARM SYSTEM SHALL BE CAPABLE OF SUPPORTING VISUAL STROBE FIRE ALARM, REFER TO E00 DESIGN/BUILD FIRE ALARM NOTES.
7. MINI FIRE ALARM HORN PART OF BUILDING FIRE ALARM SYSTEM WITH LOW FREQUENCY SOUNDER BASES.
8. LOOPS OR SWTCHGROUPS INDICATE LIGHT FIXTURES (&/OR RECEPTACLES) CONTROLLED BY SWITCH.
9. WATER SUBMETER REMOTE DISPLAY READERS TO BE MOUNTED AT +48" AFF TO TOP, REFER TO PLUMBING PLANS FOR LOCATION. DEVICE PROVIDED BY PLUMBING CONTRACTOR, ELECTRICAL CONTRACTOR TO PROVIDE ALL NECESSARY WIRING AND INSTALLATION.
10. DRYER BOOSTER FANS (DBF) PROVIDED WITH OWN AIR PRESSURE SENSOR, PROVIDE 120V EQUIPMENT CONNECTION.
11. PANCAKE BOXES SHOULD BE PROVIDED IN LOCATIONS WHERE STRUCTURAL HOLD DOWNS PREVENT RECEPTACLE/SWITCH PLACEMENTS AS PRESCRIBED PER CODE.
12. PROVIDE GFCI RECEPTACLES WITHIN 6–FT OF ALL SINKS, INCLUDING THE KITCHEN SINK.
13. AFCI PROTECTION: REQUIRES THE MAXIMUM LENGTH OF BRANCH CIRCUIT WIRING FROM THE OVERCURRENT DEVICE TO THE FIRST OUTLET SHALL NOT EXCEED 50–FT FOR #14 AWG OR 70–FT FOR #12 AWG. THE FIRST OUTLET BOX IN THE BRANCH CIRCUIT SHALL BE MARKED TO INDICATE THAT IT IS THE FIRST OUTLET OF THE CIRCUIT "AFCI FIRST OUTLET".
14. LOAD CENTERS TO BE MOUNTED 48" AFF TO TOP OF TOP CIRCUIT BREAKER.
15. T24 2019: ALL RECESSED LIGHTS AND FAN/LIGHT COMBOS TO BE SEALED WITH A GASKET OR CAULK BETWEEN THE LUMINAIRE HOUSING AND CEILING, AND SHALL HAVE ALL AIR LEAK PATHS BETWEEN CONDITIONED AND UNCONDITIONED SPACES SEALED WITH A GASKET OR CAULK.
16. SUPPLY FAN SF–1: LOCATE LOCAL DISCONNECT SWITCH ABOVE CEILING ACCESSIBLE VIA ACCESS PANEL. IN ADDITION, PROVIDE SHUTOFF SWITCH IN A READILY ACCESSIBLE LOCATION, WITH THE FOLLOWING PERMANENT PLAQUE:
"THIS SWITCH CONTROLS THE INDOOR AIR QUALITY VENTILATION FOR THE APARTMENT UNIT, LEAVE IT ON UNLESS THE OUTDOOR AIR QUALITY IS VERY POOR".
17. BACK TO BACK OUTLETS: WHERE OUTLETS ARE ON OPPOSITE SIDES OF SOUND RATED PARTITIONS, SEPARATION OF 16" RECOMMENDED, 12" MINIMUM; EXPOSED BACKS AND SIDES SHOULD BE TREATED WITH PUTTY PADS. IF NOT POSSIBLE DUE TO REQUIRED OUTLETS PER CEC, A GYPSUM BOARD OR SHEET METAL BACKER PLATE (MIN. 20"H X WIDTH OF STUD BAY) CENTERED BEHIND THE OUTLET IS REQUIRED. (ACOUSTICAL REQUIREMENT.)

KITCHEN

K1. KITCHEN RECEPTACLES & SWITCHES MOUNTED A MAXIMUM HEIGHT OF +44" AFF TO THE TOP OF DEVICE. REFER TO ARCHITECTURAL ELEVATIONS FOR EXACT HEIGHT AND MOUNTING.

K2. ON RAISED KITCHEN BARTOP, MOUNT HORIZONTALLY AT +43" AFF TO TOP OF BOX.

K3. L–SHAPED KITCHENS: ONE OUTLET MUST BE LOCATED A MINIMUM 36" FROM THE OUTSIDE OF THE CORNER FOR ACCESSIBILITY.

K4. PROVIDE GFCI/AFCI COMBINATION CIRCUIT BREAKERS FOR ALL RECEPTACLES LOCATED WITHIN 6–FT OF A KITCHEN SINK, THIS APPLIES TO KITCHEN APPLIANCE RECEPTACLES.

BATHROOM

B1. RESTROOM EXHAUST LIGHT/FAN – U5/M3: PANASONIC WHISPERGREEN EXHAUST FAN HAS LOW AND HIGH SETTING, SEE MECHANICAL SCHEDULE FOR EF–1, LOW SETTING ON 24/7. HIGH SETTING TO BE CONTROLLED BY INTEGRAL HUMIDISTAT & INTEGRAL MOTION SENSOR. COORDINATE ALL WIRING WITH INSTALLATION MANUAL. LIGHT TO BE CONTROLLED BY VACANCY SWITCH.

B2. BATHROOM: RECEPTACLE AND SWITCH TO BE 46" AFF TO TOP OF THE BOX.

B3. BATHROOM SWITCHING: FIRST SWITCH (VACANCY) IS TO CONTROL LIGHT IN THE FAN/LIGHT COMBO AND THE VANITY LIGHT.

DOORBELL SCHEDULE:

DOORBELL 120V POWER TO BE FROM NEAREST GENERAL PURPOSE LIGHTING/RECEPTACLE CIRCUIT. DOORBELL SYSTEM TO BE CAPABLE OF ADDING A VISUAL STROBE.

- DOORBELL PUSH–BUTTON: MODEL: NUTONE #PB41LSN CONFIRM FINISH WITH ARCH. MOUNTING: +48" TO TOP
- DOORBELL TRANSFORMER: MODEL: NUTONE #C905 MOUNTING: LOCATED IN CLOSET
- DOORBELL CHIME: MODEL: NUTONE #LA11WH MOUNTING: +80" TO BOTTOM

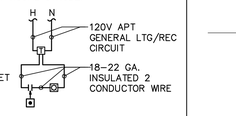

ACCESSIBLE AND COMMUNICATION UNITS:
PROVIDE VISUAL AND AUDIBLE ALARMS
- DOORBELL & STROBE: EDWARDS 6536–G5
- TRANSFORMER: EDWARDS 592
- PUSHBUTTON: EDWARDS 620/147–10
- (147–10 NAMEPLATE: "HOLD BUTTON FOR 5 SECONDS")

VAN METER WILLIAMS POLLACK LLP
ARCHITECTURE | URBAN DESIGN ■ SAN FRANCISCO | DENVER | MINNEAPOLIS
333 Bryant Street, Suite 300, San Francisco, CA 94107 T 415.974.5952

CIVIL ENGINEER
BKF ENGINEERS
1730 N. FIRST ST SUITE 600
SAN JOSE, CA 95112

JOINT TRENCH / DRY UTILITIES
MILLENIUM DESIGN
PO BOX 737
ALAMO, CA 94507

LANDSCAPE ARCHITECT
PLURAL STUDIO
2742 17TH STREET
SAN FRANCISCO, CA 94110

STRUCTURAL ENGINEER
HOHBACH-LEWIN, INC
250 SHERIDAN AVE STE 100
PALO ALTO, CA 94306

MEP ENGINEER
EMERALD CITY ENGINEERS
21705 HIGHWAY 99
LYNWOOD, WA 98036

ENERGY CONSULTANT
REDWOOD ENERGY
1887 Q STREET
ARCATA, CA 95521

EMERALD CITY ENGINEERS, INC
21705 Highway 99
Lynnwood, WA 98036
TEL: 425-741-1200

REGISTERED PROFESSIONAL ENGINEER
ADAM C. FRIEDL
21042E
EXP: 3-31-23
ELECTRICAL
STATE OF CALIFORNIA

03-20-23

COUNTY OF SANTA CLARA
BUILDING INSPECTION OFFICE
PLANS APPROVED FOR PERMIT
RECORD NO.: DEV22-1242
By: [illegible] Date: 07/28/2023
PLANS ON THE SITE FOR INSPECTIONS

ID	DATE	NAME
0	11/4/2022	PERMIT CONVENTIONAL
1	12/16/2022	BID SET
B	03/20/2023	BID ADDENDUM
2	03/20/2023	PLAN CHECK RESPONSE 2

Project:

EDUCATOR HOUSING
231 GRANT AVENUE

231 GRANT AVENUE
PALO ALTO, CA 94306

Client:
mercy HOUSING
abode communities
MERCY HOUSING/
ABODE COMMUNITIES

UNIT PLANS

JOB #: 2293-007
SCALE: AS NOTED

E4.03

PLAN CHECK RESPONSE 2 | DATE: 03/20/2023

COPYRIGHT 2023, EMERALD CITY ENGINEERS, INC.
K:\LATTER-2293-007 231 GRANT, PALO ALTO, CA\DWG\E403 UNIT PLANS.DWG 03-17-2023 11:44

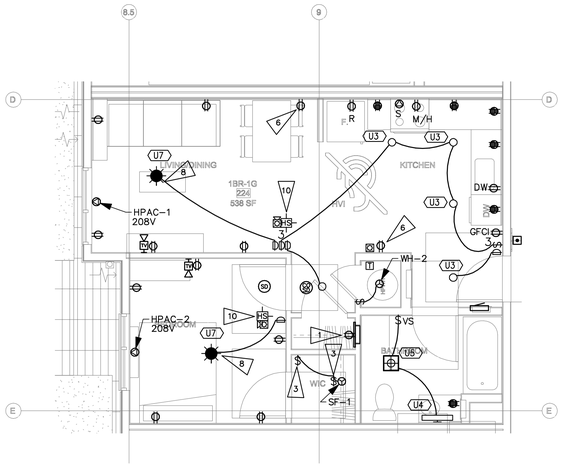

ELECTRICAL UNIT PLAN

1BR–1G HVI (4 / E4.04)

SCALE: 1/4" = 1'-0"

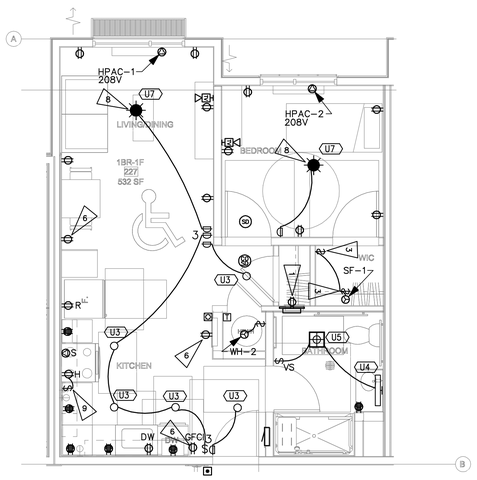

ELECTRICAL UNIT PLAN

1BR–1F MOBILITY (3 / E4.04)

SCALE: 1/4" = 1'-0"

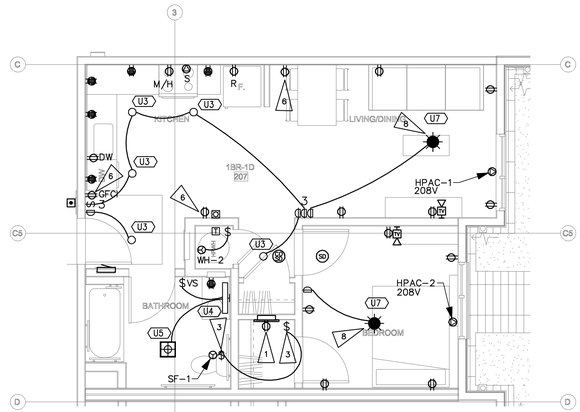

ELECTRICAL UNIT PLAN

1BR–1D (X07) (1 / E4.04)

SCALE: 1/4" = 1'-0"

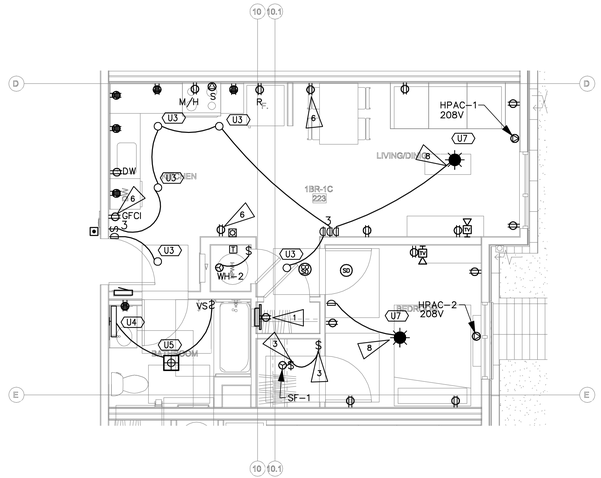

ELECTRICAL UNIT PLAN

1BR–1E (X23) (2 / E4.04)

SCALE: 1/4" = 1'-0"

UNIT MECHANICAL KEY

HPAC–1
2.91KVA,208/120V2P3W
20A MOCP
2#12,#12N,#12G

HPAC–2
2.08KVA,208/120V2P3W
15A MOCP
2#12,#12N,#12G

DEVICE KEY & WIRING LEGEND:

SYMBOL:	DEVICE NAME & INFO:	CKT & WIRE SIZE:	CIRCUITING NOTES:
S	STOVE	CKT–1,3 2#8,#8N,#10G	
M/H	MICROWAVE HOOD, +76"	CKT–5 1#12,#12N,#12G	AFCI/GFCI
DW	DISHWASHER, +20"	CKT–7 1#12,#12N,#12G	AFCI/GFCI
DISP	DISPOSAL, +20"	CKT–9 1#12,#12N,#12G	AFCI/GFCI
R	REFRIGERATOR, +30"	–	GROUP W/ SMALL APPLIANCE CKTS
D	CLOTHES DRYER, +30"	CKT–2,4 2#10,#10N,#10G	MANAGER'S UNIT ONLY
SF	SUPPLY FAN	CKT–15 1#14,#14N,#14G	AFCI. SEE SHEET NOTE #16.
W	CLOTHES WASHER, +30"	CKT–6 1#12,#12N,#12G	MANAGER'S UNIT ONLY, AFCI/GFCI
HPAC–#	EPHOCA PTAC (30A & 20A VERSION)	SEE PANEL SCHEDULE. 30A: 2#10,#10N,#10G 20A: 2#12,#12N,#12G	PROVIDED WITH PLUG & CORD. CONFIRM PLUG NEMA RATING & LOCATION WITH MANUFACTURER INSTALLATION GUIDE PRIOR TO INSTALL.
WH–2	HEAT PUMP WATER HEATER	CKT–2,4 (15A)2#12,#12N,#12G (30A)2,#10,#10N,#10G	PROVIDE LOCAL DISCONNECT FOR HEAT PUMP WATER HEATER NOT REQUIRED TO BE ACCESSIBLE PER CEC 404.8 EX:2
	BATH CKT:	1#12,#12N,#12G	CIRCUIT TO SERVE BATHROOM LIGHTING, FAN, & RECEPTACLE LOADS ONLY.
	BED CKT:	1#14,#14N,#14G 15A (AFCI)	CIRCUIT BEDROOM LIGHTING, RECEPTACLES, SMART BOX RECEPTACLE.
	LIVING CKT:	1#14,#14N,#14G 15A (AFCI)	CIRCUIT BEDROOM LIGHTING, RECEPTACLES, 120V SMOKE DETECTORS.
	KITCHEN CKT #1:	1#12,#12N,#12G (AFCI/GFCI)	CIRCUIT #1 SERVING THE KITCHEN COUNTER RECEPTACLES (INCLUDING REFRIGERATOR)
	KITCHEN CKT #2 (WITH DINING):	1#12,#12N,#12G (AFCI/GFCI)	KITCHEN CIRCUIT #2 SERVING THE KITCHEN COUNTER RECEPTACLES AND DINING RECEPTACLES.

ALL BRANCH CIRCUITS ARE COPPER.
TYPE III OR V BUILDINGS: ROMEX
TYPE I OR II BUILDINGS: MC CABLE

FLAG NOTES:

1. PROVIDE RECESSED SMART BOX WITH INTEGRAL DUPLEX RECEPTACLE. PROVIDE HOMERUNS TO NEAREST COMMUNICATIONS CLOSET. SEE 1/E6.01 FOR DETAILS.
2. PATIO LIGHT SWITCH TO BE ASTRONOMICAL TIMER BUILT INTO A SINGLE GANG JBOX (2016 T24 REQUIREMENT): LEVITON VPT24–1PZ. PROGRAM TO TURN ON/OFF AT SUNSET/SUNRISE.
3. SWITCH FOR SUPPLY FAN, SEE SHEET NOTE 16 BELOW.
4. NOT USED.
5. ADA UNITS WITH L–SHAPED KITCHENS ONLY: ACCESSIBLE RECEPTACLE TO BE MOUNTED WITHIN 12" OF COUNTERTOP SURFACE.
6. DINING ROOM RECEPTACLE CIRCUITED TO 'SMALL APPLIANCE KITCHEN BRANCH CIRCUIT' WITH AFCI PROTECTION, REFER TO PANEL SCHEDULE. GFCI PROVIDED BY CIRCUIT BREAKER.
7. PROVIDE SWITCH FOR DISPOSAL, LOCATE AT 44" TO TOP.
8. PROVIDE HEAVY DUTY METAL JBOX WITH SUPPORT ARMS CAPABLE OF SUPPORTING A PADDLE FAN. WESTINGHOUSE 0110000 OR EQUAL. PROVIDE 14/3 WIRING FROM SWITCH JBOX TO FAN.
9. PROVIDE SWITCH FOR HOOD, LOCATE AT 44" TO TOP.
10. COMMUNICATION UNIT ROOMS ONLY: FIRE ALARM SYSTEMS AND DOOR BELL TO HAVE VISUAL HORN/STROBE. MOUNT J–BOX @80" AFF ABOVE SWITCH. (HS)

SHEET NOTES:

GENERAL

1. ALL DWELLING UNIT RECEPTACLES TO BE TAMPER RESISTANT PER CEC 406.11.
2. REFER TO ARCHITECTURAL UNIT PLANS FOR DIMENSIONS OF CEILING LIGHTING FIXTURES.
3. GANG OUTLET DEVICES WHERE POSSIBLE.
4. SMOKE & COMBO SMOKE/CO DETECTORS IN UNITS, PHOTOELECTRIC TYPE, NOT IONIZING, 120V WITH BATTERY BACKUP, INTERCONNECTED WITHIN UNIT FOR COMMON ALARM, PER CODE. LOCATE MINIMUM 10FT AWAY FROM STOVES, 3FT AWAY FROM BATHROOM DOORS (WHERE POSSIBLE), 36" AWAY FROM PADDLE FANS AND TRANSFER FANS, 36" HORIZONTAL PATH FROM SUPPLY DIFFUSER.
5. WATER PROOF GFCI RECEPTACLES ARE REQUIRED AT ALL BALCONIES & GROUND/PODIUM PORCHES.
6. ALL UNITS: FIRE ALARM SYSTEM SHALL BE CAPABLE OF SUPPORTING VISUAL STROBE FIRE ALARM, REFER TO E00 DESIGN/BUILD FIRE ALARM NOTES.
7. MINI FIRE ALARM HORN PART OF BUILDING FIRE ALARM SYSTEM WITH LOW FREQUENCY SOUNDER BASES.
8. LOOPS OR SWTCHGROUPS INDICATE LIGHT FIXTURES (&/OR RECEPTACLES) CONTROLLED BY SWITCH.
9. WATER SUBMETER REMOTE DISPLAY READERS TO BE MOUNTED AT +48" AFF TO TOP, REFER TO PLUMBING PLANS FOR LOCATION. DEVICE PROVIDED BY PLUMBING CONTRACTOR, ELECTRICAL CONTRACTOR TO PROVIDE ALL NECESSARY WIRING AND INSTALLATION.
10. DRYER BOOSTER FANS (DBF) PROVIDED WITH OWN AIR PRESSURE SENSOR, PROVIDE 120V EQUIPMENT CONNECTION.
11. PANCAKE BOXES SHOULD BE PROVIDED IN LOCATIONS WHERE STRUCTURAL HOLD DOWNS PREVENT RECEPTACLE/SWITCH PLACEMENTS AS PRESCRIBED PER CODE.
12. PROVIDE GFCI RECEPTACLES WITHIN 6–FT OF ALL SINKS, INCLUDING THE KITCHEN SINK.
13. AFCI PROTECTION: REQUIRES THE MAXIMUM LENGTH OF BRANCH CIRCUIT WIRING FROM THE OVERCURRENT DEVICE TO THE FIRST OUTLET SHALL NOT EXCEED 50–FT FOR #14 AWG OR 70–FT FOR #12 AWG. THE FIRST OUTLET BOX IN THE BRANCH CIRCUIT SHALL BE MARKED TO INDICATE THAT IT IS THE FIRST OUTLET OF THE CIRCUIT "AFCI FIRST OUTLET".
14. LOAD CENTERS TO BE MOUNTED 48" AFF TO TOP OF TOP CIRCUIT BREAKER.
15. T24 2019: ALL RECESSED LIGHTS AND FAN/LIGHT COMBOS TO BE SEALED WITH A GASKET OR CAULK BETWEEN THE LUMINAIRE HOUSING AND CEILING, AND SHALL HAVE ALL AIR LEAK PATHS BETWEEN CONDITIONED AND UNCONDITIONED SPACES SEALED WITH A GASKET OR CAULK.
16. SUPPLY FAN SF–1: LOCATE LOCAL DISCONNECT SWITCH ABOVE CEILING ACCESSIBLE VIA ACCESS PANEL. IN ADDITION, PROVIDE SHUTOFF SWITCH IN A READILY ACCESSIBLE LOCATION WITH THE FOLLOWING PERMANENT PLAQUE:
"THIS SWITCH CONTROLS THE INDOOR AIR QUALITY VENTILATION FOR THE APARTMENT UNIT, LEAVE IT ON UNLESS THE OUTDOOR AIR QUALITY IS VERY POOR".
17. BACK TO BACK OUTLETS: WHERE OUTLETS ARE ON OPPOSITE SIDES OF SOUND RATED PARTITIONS, SEPARATION OF 16" RECOMMENDED, 12" MINIMUM; EXPOSED BACKS AND SIDES SHOULD BE TREATED WITH PUTTY PADS. IF NOT POSSIBLE DUE TO REQUIRED OUTLETS PER CEC, A GYPSUM BOARD OR SHEET METAL BACKER PLATE (MIN. 20"H x WIDTH OF STUD BAY) CENTERED BEHIND THE OUTLET IS REQUIRED. (ACOUSTICAL REQUIREMENT.)

KITCHEN

K1. KITCHEN RECEPTACLES & SWITCHES MOUNTED A MAXIMUM HEIGHT OF +44" AFF TO THE TOP OF DEVICE. REFER TO ARCHITECTURAL ELEVATIONS FOR EXACT HEIGHT AND MOUNTING.

K2. ON RAISED KITCHEN BARTOP, MOUNT HORIZONTALLY AT +43" AFF TO TOP OF BOX.

K3. L–SHAPED KITCHENS: ONE OUTLET MUST BE LOCATED A MINIMUM 36" FROM THE OUTSIDE OF THE CORNER FOR ACCESSIBILITY.

K4. PROVIDE GFCI/AFCI COMBINATION CIRCUIT BREAKERS FOR ALL RECEPTACLES LOCATED WITHIN 6–FT OF A KITCHEN SINK, THIS APPLIES TO KITCHEN APPLIANCE RECEPTACLES.

BATHROOM

B1. RESTROOM EXHAUST LIGHT/FAN – U5/M3: PANASONIC WHISPERGREEN EXHAUST FAN HAS LOW AND HIGH SETTING, SEE MECHANICAL SCHEDULE FOR EF–1. LOW SETTING ON 24/7. HIGH SETTING TO BE CONTROLLED BY INTEGRAL HUMIDISTAT & INTEGRAL MOTION SENSOR. COORDINATE ALL WIRING WITH INSTALLATION MANUAL. LIGHT TO BE CONTROLLED BY VACANCY SWITCH.

B2. BATHROOM: RECEPTACLE AND SWITCH TO BE 46" AFF TO TOP OF THE BOX.

B3. BATHROOM SWITCHING: FIRST SWITCH (VACANCY) IS TO CONTROL LIGHT IN THE FAN/LIGHT COMBO AND THE VANITY LIGHT.

DOORBELL SCHEDULE:

DOORBELL 120V POWER TO BE FROM NEAREST GENERAL PURPOSE LIGHTING/RECEPTACLE CIRCUIT. DOORBELL SYSTEM TO BE CAPABLE OF ADDING A VISUAL STROBE.

- DOORBELL PUSH–BUTTON:
  MODEL: NUTONE #PB41LSN
  CONFIRM FINISH WITH ARCH.
  MOUNTING: +48" TO TOP
- DOORBELL TRANSFORMER:
  MODEL: NUTONE #C905
  MOUNTING: LOCATED IN CLOSET
- DOORBELL CHIME:
  MODEL: NUTONE #LA11WH
  MOUNTING: +80" TO BOTTOM

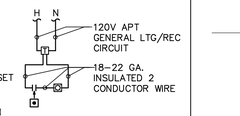

ACCESSIBLE AND COMMUNICATION UNITS:
PROVIDE VISUAL AND AUDIBLE ALARMS
- DOORBELL & STROBE: EDWARDS 6536–G5
- TRANSFORMER: EDWARDS 592
- PUSHBUTTON: EDWARDS 620/147–10
- (147–10 NAMEPLATE: "HOLD BUTTON FOR 5 SECONDS")

VAN METER WILLIAMS POLLACK LLP
ARCHITECTURE | URBAN DESIGN ■ SAN FRANCISCO | DENVER | MINNEAPOLIS
333 Bryant Street, Suite 300, San Francisco, CA 94107 T 415.974.5252

CIVIL ENGINEER
BKF ENGINEERS
1730 N. FIRST ST SUITE 600
SAN JOSE, CA 95112

JOINT TRENCH / DRY UTILITIES
MILLENIUM DESIGN
PO BOX 737
ALAMO, CA 94507

LANDSCAPE ARCHITECT
PLURAL STUDIO
2742 17TH STREET
SAN FRANCISCO, CA 94110

STRUCTURAL ENGINEER
HOHBACH-LEWIN, INC
250 SHERIDAN AVE STE 100
PALO ALTO, CA 94306

MEP ENGINEER
EMERALD CITY ENGINEERS
21705 HIGHWAY 99
LYNWOOD, WA 98036

ENERGY CONSULTANT
REDWOOD ENERGY
1887 Q STREET
ARCATA, CA 95521

EMERALD CITY ENGINEERS, INC
21705 Highway 99
Lynnwood, WA 98036
TEL: 425-741-1200

ADAM C. FRICK
E19425
EXP: 3-31-23
ELECTRICAL
STATE OF CALIFORNIA
REGISTERED PROFESSIONAL ENGINEER
03-20-23

COUNTY OF SANTA CLARA
BUILDING INSPECTION OFFICE
PLANS APPROVED FOR PERMIT
RECORD NO.: DEV22-1242
BY: nick.gomes Date: 07/28/2023
HARD COPY OF RECORD STAMPED PLANS MUST BE KEPT ON JOB SITE AT ALL TIMES

ID	DATE	NAME
	10/28/2022	PLANNING SET
A	12/16/2022	BID SET
B	03/29/2023	BID ADDENDUM
2	03/29/2023	PLAN CHECK RESPONSE 2

Project:

EDUCATOR HOUSING
231 GRANT AVENUE

231 GRANT AVENUE
PALO ALTO, CA 94306

Client:
MERCY HOUSING/
ABODE COMMUNITIES

UNIT PLANS

JOB #: 2293-007
SCALE: AS NOTED

E4.04

PLAN CHECK RESPONSE 2 | DATE: 03/20/2023

COPYRIGHT 2023, EMERALD CITY ENGINEERS, INC.
K:\LATION A\2293-007 231 GRANT, PALO ALTO, CA\DWG\E404 UNIT PLANS.DWG 03-17-2023 11:43

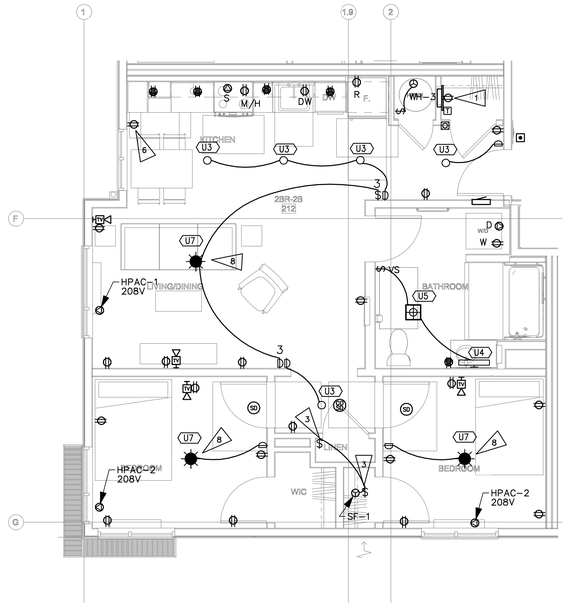

ELECTRICAL UNIT PLAN

2BR-2B

SCALE: 1/4" = 1'-0"

2 / E4.05

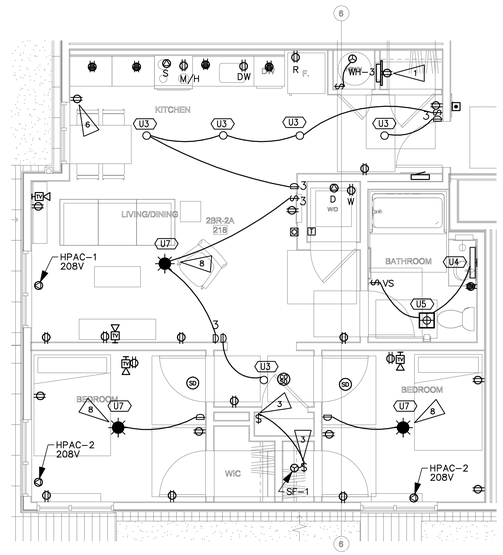

ELECTRICAL UNIT PLAN

2BR-2A

SCALE: 1/4" = 1'-0"

1 / E4.05

UNIT MECHANICAL KEY

HPAC-1
2.91KVA,208/120V2P3W
20A MOCP
2#12,#12N,#12G

HPAC-2
2.08KVA,208/120V2P3W
15A MOCP
2#12,#12N,#12G

DEVICE KEY & WIRING LEGEND:

SYMBOL:	DEVICE NAME & INFO:	CKT & WIRE SIZE:	CIRCUITING NOTES:
S	STOVE	CKT-1,3 2#8,#8N,#10G	
M/H	MICROWAVE HOOD, +76"	CKT-5 1#12,#12N,#12G	AFCI/GFCI
DW	DISHWASHER, +20"	CKT-7 1#12,#12N,#12G	AFCI/GFCI
DISP	DISPOSAL, +20"	CKT-9 1#12,#12N,#12G	AFCI/GFCI
R	REFRIGERATOR, +30"	–	GROUP W/ SMALL APPLIANCE CKTS
D	CLOTHES DRYER, +30"	CKT-2,4 2#10,#10N,#10G	MANAGER'S UNIT ONLY
SF	SUPPLY FAN	CKT-15 1#14,#14N,#14G	AFCI. SEE SHEET NOTE #16.
W	CLOTHES WASHER, +30"	CKT-6 1#12,#12N,#12G	MANAGER'S UNIT ONLY, AFCI/GFCI
HPAC-#	EPHOCA PTAC (30A & 20A VERSION)	SEE PANEL SCHEDULE. 30A: 2#10,#10N,#10G 20A: 2#12,#12N,#12G	PROVIDED WITH PLUG & CORD. CONFIRM PLUG NEMA RATING & LOCATION WITH MANUFACTURER INSTALLATION GUIDE PRIOR TO INSTALL.
WH-2	HEAT PUMP WATER HEATER	CKT-2,4 (15A)2#12,#12N,#12G (30A)2,#10,#10N,#10G	PROVIDE LOCAL DISCONNECT FOR HEAT PUMP WATER HEATER NOT REQUIRED TO BE ACCESSIBLE PER CEC 404.8 EX:2
	BATH CKT:	1#12,#12N,#12G	CIRCUIT TO SERVE BATHROOM LIGHTING, FAN, & RECEPTACLE LOADS ONLY.
	BED CKT:	1#14,#14N,#14G 15A (AFCI)	CIRCUIT BEDROOM LIGHTING, RECEPTACLES, SMART BOX RECEPTACLE.
	LIVING CKT:	1#14,#14N,#14G 15A (AFCI)	CIRCUIT BEDROOM LIGHTING, RECEPTACLES, 120V SMOKE DETECTORS.
	KITCHEN CKT #1:	1#12,#12N,#12G (AFCI/GFCI)	CIRCUIT #1 SERVING THE KITCHEN COUNTER RECEPTACLES (INCLUDING REFRIGERATOR)
	KITCHEN CKT #2 (WITH DINING):	1#12,#12N,#12G (AFCI/GFCI)	KITCHEN CIRCUIT #2 SERVING THE KITCHEN COUNTER RECEPTACLES AND DINING RECEPTACLES.

ALL BRANCH CIRCUITS ARE COPPER.
TYPE III OR V BUILDINGS: ROMEX
TYPE I OR II BUILDINGS: MC CABLE

FLAG NOTES:

1. PROVIDE RECESSED SMART BOX WITH INTEGRAL DUPLEX RECEPTACLE. PROVIDE HOMERUNS TO NEAREST COMMUNICATIONS CLOSET. SEE 1/E6.01 FOR DETAILS.
2. PATIO LIGHT SWITCH TO BE ASTRONOMICAL TIMER BUILT INTO A SINGLE GANG JBOX (2016 T24 REQUIREMENT): LEVITON VPT24-1PZ. PROGRAM TO TURN ON/OFF AT SUNSET/SUNRISE.
3. SWITCH FOR SUPPLY FAN, SEE SHEET NOTE 16 BELOW.
4. NOT USED.
5. ADA UNITS WITH L-SHAPED KITCHENS ONLY: ACCESSIBLE RECEPTACLE TO BE MOUNTED WITHIN 12" OF COUNTERTOP SURFACE.
6. DINING ROOM RECEPTACLE CIRCUITED TO 'SMALL APPLIANCE KITCHEN BRANCH CIRCUIT' WITH AFCI PROTECTION, REFER TO PANEL SCHEDULE. GFCI PROVIDED BY CIRCUIT BREAKER.
7. PROVIDE SWITCH FOR DISPOSAL, LOCATE AT 44" TO TOP.
8. PROVIDE HEAVY DUTY METAL JBOX WITH SUPPORT ARMS CAPABLE OF SUPPORTING A PADDLE FAN. WESTINGHOUSE 0110000 OR EQUAL. PROVIDE 14/3 WIRING FROM SWITCH JBOX TO FAN.
9. PROVIDE SWITCH FOR HOOD, LOCATE AT 44" TO TOP.
10. COMMUNICATION UNIT ROOMS ONLY: FIRE ALARM SYSTEMS AND DOOR BELL TO HAVE VISUAL HORN/STROBE. MOUNT J-BOX @80" AFF ABOVE SWITCH. HS

SHEET NOTES:

GENERAL

1. ALL DWELLING UNIT RECEPTACLES TO BE TAMPER RESISTANT PER CEC 406.11.
2. REFER TO ARCHITECTURAL UNIT PLANS FOR DIMENSIONS OF CEILING LIGHTING FIXTURES.
3. GANG OUTLET DEVICES WHERE POSSIBLE.
4. SMOKE & COMBO SMOKE/CO DETECTORS IN UNITS, PHOTOELECTRIC TYPE, NOT IONIZING, 120V WITH BATTERY BACKUP, INTERCONNECTED WITHIN UNIT FOR COMMON ALARM, PER CODE. LOCATE MINIMUM 10FT AWAY FROM STOVES, 3FT AWAY FROM BATHROOM DOORS (WHERE POSSIBLE), 36" AWAY FROM PADDLE FANS AND TRANSFER FANS, 36" HORIZONTAL PATH FROM SUPPLY DIFFUSER.
5. WATER PROOF GFCI RECEPTACLES ARE REQUIRED AT ALL BALCONIES & GROUND/PODIUM PORCHES.
6. ALL UNITS: FIRE ALARM SYSTEM SHALL BE CAPABLE OF SUPPORTING VISUAL STROBE FIRE ALARM, REFER TO E00 DESIGN/BUILD FIRE ALARM NOTES.
7. MINI FIRE ALARM HORN PART OF BUILDING FIRE ALARM SYSTEM WITH LOW FREQUENCY SOUNDER BASES.
8. LOOPS OR SWTCHGROUPS INDICATE LIGHT FIXTURES (&/OR RECEPTACLES) CONTROLLED BY SWITCH.
9. WATER SUBMETER REMOTE DISPLAY READERS TO BE MOUNTED AT +48" AFF TO TOP, REFER TO PLUMBING PLANS FOR LOCATION. DEVICE PROVIDED BY PLUMBING CONTRACTOR, ELECTRICAL CONTRACTOR TO PROVIDE ALL NECESSARY WIRING AND INSTALLATION.
10. DRYER BOOSTER FANS (DBF) PROVIDED WITH OWN AIR PRESSURE SENSOR, PROVIDE 120V EQUIPMENT CONNECTION.
11. PANCAKE BOXES SHOULD BE PROVIDED IN LOCATIONS WHERE STRUCTURAL HOLD DOWNS PREVENT RECEPTACLE/SWITCH PLACEMENTS AS PRESCRIBED PER CODE.
12. PROVIDE GFCI RECEPTACLES WITHIN 6-FT OF ALL SINKS, INCLUDING THE KITCHEN SINK.
13. AFCI PROTECTION: REQUIRES THE MAXIMUM LENGTH OF BRANCH CIRCUIT WIRING FROM THE OVERCURRENT DEVICE TO THE FIRST OUTLET SHALL NOT EXCEED 50-FT FOR #14 AWG OR 70-FT FOR #12 AWG. THE FIRST OUTLET BOX IN THE BRANCH CIRCUIT SHALL BE MARKED TO INDICATE THAT IT IS THE FIRST OUTLET OF THE CIRCUIT "AFCI FIRST OUTLET".
14. LOAD CENTERS TO BE MOUNTED 48" AFF TO TOP OF TOP CIRCUIT BREAKER.
15. T24 2019: ALL RECESSED LIGHTS AND FAN/LIGHT COMBOS TO BE SEALED WITH A GASKET OR CAULK BETWEEN THE LUMINAIRE HOUSING AND CEILING, AND SHALL HAVE ALL AIR LEAK PATHS BETWEEN CONDITIONED AND UNCONDITIONED SPACES SEALED WITH A GASKET OR CAULK.
16. SUPPLY FAN SF-1: LOCATE LOCAL DISCONNECT SWITCH ABOVE CEILING ACCESSIBLE VIA ACCESS PANEL. IN ADDITION, PROVIDE SHUTOFF SWITCH IN A READILY ACCESSIBLE LOCATION WITH THE FOLLOWING PERMANENT PLAQUE:
"THIS SWITCH CONTROLS THE INDOOR AIR QUALITY VENTILATION FOR THE APARTMENT UNIT, LEAVE IT ON UNLESS THE OUTDOOR AIR QUALITY IS VERY POOR".
17. BACK TO BACK OUTLETS: WHERE OUTLETS ARE ON OPPOSITE SIDES OF SOUND RATED PARTITIONS, SEPARATION OF 16" RECOMMENDED, 12" MINIMUM; EXPOSED BACKS AND SIDES SHOULD BE TREATED WITH PUTTY PADS. IF NOT POSSIBLE DUE TO REQUIRED OUTLETS PER CEC, A GYPSUM BOARD OR SHEET METAL BACKER PLATE (MIN. 20"H X WIDTH OF STUD BAY) CENTERED BEHIND THE OUTLET IS REQUIRED. (ACOUSTICAL REQUIREMENT.)

KITCHEN

K1. KITCHEN RECEPTACLES & SWITCHES MOUNTED A MAXIMUM HEIGHT OF +44" AFF TO THE TOP OF DEVICE. REFER TO ARCHITECTURAL ELEVATIONS FOR EXACT HEIGHT AND MOUNTING.

K2. ON RAISED KITCHEN BARTOP, MOUNT HORIZONTALLY AT +43" AFF TO TOP OF BOX.

K3. L-SHAPED KITCHENS: ONE OUTLET MUST BE LOCATED A MINIMUM 36" FROM THE OUTSIDE OF THE CORNER FOR ACCESSIBILITY.

K4. PROVIDE GFCI/AFCI COMBINATION CIRCUIT BREAKERS FOR ALL RECEPTACLES LOCATED WITHIN 6-FT OF A KITCHEN SINK, THIS APPLIES TO KITCHEN APPLIANCE RECEPTACLES.

BATHROOM

B1. RESTROOM EXHAUST LIGHT/FAN – U5/M3: PANASONIC WHISPERGREEN EXHAUST FAN HAS LOW AND HIGH SETTING, SEE MECHANICAL SCHEDULE FOR EF-1. LOW SETTING ON 24/7. HIGH SETTING TO BE CONTROLLED BY INTEGRAL HUMIDISTAT & INTEGRAL MOTION SENSOR. COORDINATE ALL WIRING WITH INSTALLATION MANUAL. LIGHT TO BE CONTROLLED BY VACANCY SWITCH.

B2. BATHROOM: RECEPTACLE AND SWITCH TO BE 46" AFF TO TOP OF THE BOX.

B3. BATHROOM SWITCHING: FIRST SWITCH (VACANCY) IS TO CONTROL LIGHT IN THE FAN/LIGHT COMBO AND THE VANITY LIGHT.

DOORBELL SCHEDULE:

DOORBELL 120V POWER TO BE FROM NEAREST GENERAL PURPOSE LIGHTING/RECEPTACLE CIRCUIT. DOORBELL SYSTEM TO BE CAPABLE OF ADDING A VISUAL STROBE.

- DOORBELL PUSH-BUTTON:
  MODEL: NUTONE #PB41LSN
  CONFIRM FINISH WITH ARCH.
  MOUNTING: +48" TO TOP
- DOORBELL TRANSFORMER:
  MODEL: NUTONE #C905
  MOUNTING: LOCATED IN CLOSET
- DOORBELL CHIME:
  MODEL: NUTONE #LA11WH
  MOUNTING: +80" TO BOTTOM

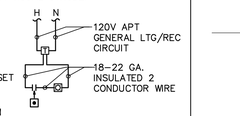

ACCESSIBLE AND COMMUNICATION UNITS:
PROVIDE VISUAL AND AUDIBLE ALARMS
- DOORBELL & STROBE: EDWARDS 6536-G5
- TRANSFORMER: EDWARDS 592
- PUSHBUTTON: EDWARDS 620/147-10
- (147-10 NAMEPLATE: "HOLD BUTTON FOR 5 SECONDS")

COPYRIGHT 2023, EMERALD CITY ENGINEERS, INC.
KOLATION J:\2293-007 231 GRANT, PALO ALTO, CA\DWG\E405 UNIT PLANS.DWG 03-17-2023 11:43

VAN METER WILLIAMS POLLACK LLP
ARCHITECTURE | URBAN DESIGN ■ SAN FRANCISCO | DENVER | MINNEAPOLIS
333 Bryant Street, Suite 300, San Francisco, CA 94107 T 415.974.5252

CIVIL ENGINEER
BKF ENGINEERS
1730 N. FIRST ST SUITE 600
SAN JOSE, CA 95112

JOINT TRENCH / DRY UTILITIES
MILLENIUM DESIGN
PO BOX 737
ALAMO, CA 94507

LANDSCAPE ARCHITECT
PLURAL STUDIO
2742 17TH STREET
SAN FRANCISCO, CA 94110

STRUCTURAL ENGINEER
HOHBACH-LEWIN, INC
250 SHERIDAN AVE STE 100
PALO ALTO, CA 94306

MEP ENGINEER
EMERALD CITY ENGINEERS
21705 HIGHWAY 99
LYNWOOD, WA 98036

ENERGY CONSULTANT
REDWOOD ENERGY
1887 Q STREET
ARCATA, CA 95521

EMERALD CITY ENGINEERS, INC
21705 Highway 99
Lynnwood, WA 98036
TEL: 425-741-1200

REGISTERED PROFESSIONAL ENGINEER
ADAM C. FRIEDL
ELECTRICAL
EXP: 3-31-23
STATE OF CALIFORNIA

03-20-23

COUNTY OF SANTA CLARA
BUILDING INSPECTION OFFICE
PLANS APPROVED FOR PERMIT
RECORD NO.: DEV22-1242
BY: rick.gomes Date: 07/28/2023
HARD COPY OF THESE STAMPED PLANS MUST BE ON THE SITE FOR INSPECTIONS

ID	DATE	NAME
1	11/11/2022	PERMIT CONVENTIONAL
A	12/16/2022	BID SET
B	03/20/2023	BID ADDENDUM
2	03/20/2023	PLAN CHECK RESPONSE 2

Project:

EDUCATOR HOUSING
231 GRANT AVENUE

231 GRANT AVENUE
PALO ALTO, CA 94306

Client:
MERCY HOUSING/
ABODE COMMUNITIES

UNIT PLANS

JOB #: 2293-007
SCALE: AS NOTED

E4.05

PLAN CHECK RESPONSE 2 | DATE: 03/20/2023

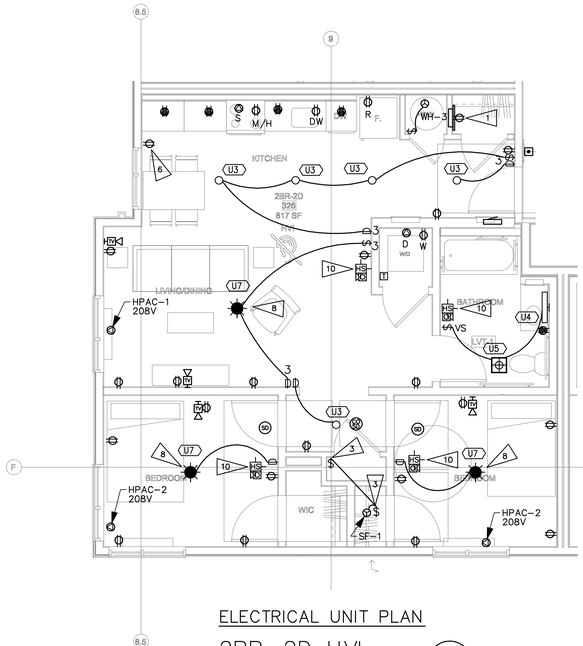

ELECTRICAL UNIT PLAN

2BR–2D HVI (4 / E4.05)

SCALE: 1/4" = 1'-0"

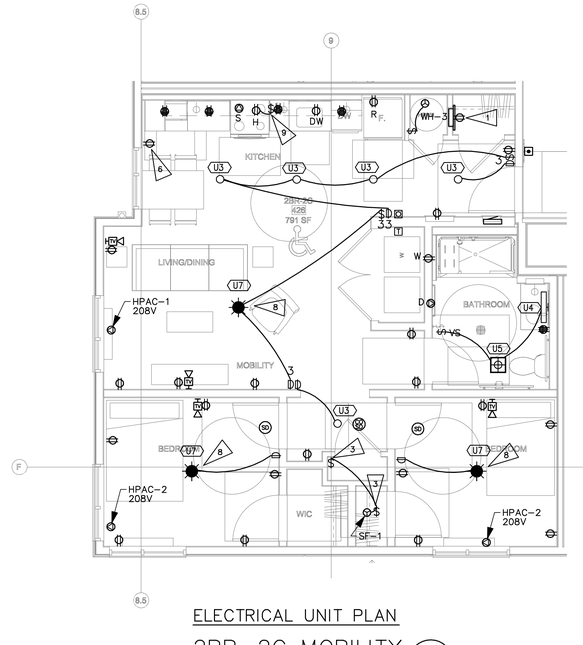

ELECTRICAL UNIT PLAN

2BR–2C MOBILITY (1 / E4.06)

SCALE: 1/4" = 1'-0"

UNIT MECHANICAL KEY

HPAC–1
2.91KVA,208/120V2P3W
20A MOCP
2#12,#12N,#12G

HPAC–2
2.08KVA,208/120V2P3W
15A MOCP
2#12,#12N,#12G

DEVICE KEY & WIRING LEGEND:

SYMBOL:	DEVICE NAME & INFO:	CKT & WIRE SIZE:	CIRCUITING NOTES:
S	STOVE	CKT–1,3 2#8,#8N,#10G	
M/H	MICROWAVE HOOD, +76"	CKT–5 1#12,#12N,#12G	AFCI/GFCI
DW	DISHWASHER, +20"	CKT–7 1#12,#12N,#12G	AFCI/GFCI
DISP	DISPOSAL, +20"	CKT–9 1#12,#12N,#12G	AFCI/GFCI
R	REFRIGERATOR, +30"	–	GROUP W/ SMALL APPLIANCE CKTS
D	CLOTHES DRYER, +30"	CKT–2,4 2#10,#10N,#10G	MANAGER'S UNIT ONLY
SF	SUPPLY FAN	CKT–15 1#14,#14N,#14G	AFCI. SEE SHEET NOTE #16.
W	CLOTHES WASHER, +30"	CKT–6 1#12,#12N,#12G	MANAGER'S UNIT ONLY, AFCI/GFCI
HPAC–#	EPHOCA PTAC (30A & 20A VERSION)	SEE PANEL SCHEDULE. 30A: 2#10,#10N,#10G 20A: 2#12,#12N,#12G	PROVIDED WITH PLUG & CORD. CONFIRM PLUG NEMA RATING & LOCATION WITH MANUFACTURER INSTALLATION GUIDE PRIOR TO INSTALL.
WH–2	HEAT PUMP WATER HEATER	CKT–2,4 (15A)2#12, #12N,#12G (30A)2,#10,#10N,#10G	PROVIDE LOCAL DISCONNECT FOR HEAT PUMP WATER HEATER NOT REQUIRED TO BE ACCESSIBLE PER CEC 404.8 EX:2
	BATH CKT:	1#12,#12N,#12G	CIRCUIT TO SERVE BATHROOM LIGHTING, FAN, & RECEPTACLE LOADS ONLY.
	BED CKT:	1#14,#14N,#14G 15A (AFCI)	CIRCUIT BEDROOM LIGHTING, RECEPTACLES, SMART BOX RECEPTACLE.
	LIVING CKT:	1#14,#14N,#14G 15A (AFCI)	CIRCUIT BEDROOM LIGHTING, RECEPTACLES, 120V SMOKE DETECTORS.
	KITCHEN CKT #1:	1#12,#12N,#12G (AFCI/GFCI)	CIRCUIT #1 SERVING THE KITCHEN COUNTER RECEPTACLES (INCLUDING REFRIGERATOR)
	KITCHEN CKT #2 (WITH DINING):	1#12,#12N,#12G (AFCI/GFCI)	KITCHEN CIRCUIT #2 SERVING THE KITCHEN COUNTER RECEPTACLES AND DINING RECEPTACLES.

ALL BRANCH CIRCUITS ARE COPPER.
TYPE III OR V BUILDINGS: ROMEX
TYPE I OR II BUILDINGS: MC CABLE

FLAG NOTES:

1. PROVIDE RECESSED SMART BOX WITH INTEGRAL DUPLEX RECEPTACLE. PROVIDE HOMERUNS TO NEAREST COMMUNICATIONS CLOSET. SEE 1/E6.01 FOR DETAILS.
2. PATIO LIGHT SWITCH TO BE ASTRONOMICAL TIMER BUILT INTO A SINGLE GANG JBOX (2016 T24 REQUIREMENT): LEVITON VPT24–1PZ. PROGRAM TO TURN ON/OFF AT SUNSET/SUNRISE.
3. SWITCH FOR SUPPLY FAN, SEE SHEET NOTE 16 BELOW.
4. NOT USED.
5. ADA UNITS WITH L–SHAPED KITCHENS ONLY: ACCESSIBLE RECEPTACLE TO BE MOUNTED WITHIN 12" OF COUNTERTOP SURFACE.
6. DINING ROOM RECEPTACLE CIRCUITED TO 'SMALL APPLIANCE KITCHEN BRANCH CIRCUIT' WITH AFCI PROTECTION, REFER TO PANEL SCHEDULE. GFCI PROVIDED BY CIRCUIT BREAKER.
7. PROVIDE SWITCH FOR DISPOSAL, LOCATE AT 44" TO TOP.
8. PROVIDE HEAVY DUTY METAL JBOX WITH SUPPORT ARMS CAPABLE OF SUPPORTING A PADDLE FAN. WESTINGHOUSE 0110000 OR EQUAL. PROVIDE 14/3 WIRING FROM SWITCH JBOX TO FAN.
9. PROVIDE SWITCH FOR HOOD, LOCATE AT 44" TO TOP.
10. COMMUNICATION UNIT ROOMS ONLY: FIRE ALARM SYSTEMS AND DOOR BELL TO HAVE VISUAL HORN/STROBE. MOUNT J–BOX @80" AFF ABOVE SWITCH. (HS)

SHEET NOTES:

GENERAL

1. ALL DWELLING UNIT RECEPTACLES TO BE TAMPER RESISTANT PER CEC 406.11.
2. REFER TO ARCHITECTURAL UNIT PLANS FOR DIMENSIONS OF CEILING LIGHTING FIXTURES.
3. GANG OUTLET DEVICES WHERE POSSIBLE.
4. SMOKE & COMBO SMOKE/CO DETECTORS IN UNITS, PHOTOELECTRIC TYPE, NOT IONIZING, 120V WITH BATTERY BACKUP, INTERCONNECTED WITHIN UNIT FOR COMMON ALARM, PER CODE. LOCATE MINIMUM 10FT AWAY FROM STOVES, 3FT AWAY FROM BATHROOM DOORS (WHERE POSSIBLE), 36" AWAY FROM PADDLE FANS AND TRANSFER FANS, 36" HORIZONTAL PATH FROM SUPPLY DIFFUSER.
5. WATER PROOF GFCI RECEPTACLES ARE REQUIRED AT ALL BALCONIES & GROUND/PODIUM PORCHES.
6. ALL UNITS: FIRE ALARM SYSTEM SHALL BE CAPABLE OF SUPPORTING VISUAL STROBE FIRE ALARM, REFER TO E00 DESIGN/BUILD FIRE ALARM NOTES.
7. MINI FIRE ALARM HORN PART OF BUILDING FIRE ALARM SYSTEM WITH LOW FREQUENCY SOUNDER BASES.
8. LOOPS OR SWTCHGROUPS INDICATE LIGHT FIXTURES (&/OR RECEPTACLES) CONTROLLED BY SWITCH.
9. WATER SUBMETER REMOTE DISPLAY READERS TO BE MOUNTED AT +48" AFF TO TOP, REFER TO PLUMBING PLANS FOR LOCATION. DEVICE PROVIDED BY PLUMBING CONTRACTOR, ELECTRICAL CONTRACTOR TO PROVIDE ALL NECESSARY WIRING AND INSTALLATION.
10. DRYER BOOSTER FANS (DBF) PROVIDED WITH OWN AIR PRESSURE SENSOR, PROVIDE 120V EQUIPMENT CONNECTION.
11. PANCAKE BOXES SHOULD BE PROVIDED IN LOCATIONS WHERE STRUCTURAL HOLD DOWNS PREVENT RECEPTACLE/SWITCH PLACEMENTS AS PRESCRIBED PER CODE.
12. PROVIDE GFCI RECEPTACLES WITHIN 6–FT OF ALL SINKS, INCLUDING THE KITCHEN SINK.
13. AFCI PROTECTION: REQUIRES THE MAXIMUM LENGTH OF BRANCH CIRCUIT WIRING FROM THE OVERCURRENT DEVICE TO THE FIRST OUTLET SHALL NOT EXCEED 50–FT FOR #14 AWG OR 70–FT FOR #12 AWG. THE FIRST OUTLET BOX IN THE BRANCH CIRCUIT SHALL BE MARKED TO INDICATE THAT IT IS THE FIRST OUTLET OF THE CIRCUIT "AFCI FIRST OUTLET".
14. LOAD CENTERS TO BE MOUNTED 48" AFF TO TOP OF TOP CIRCUIT BREAKER.
15. T24 2019: ALL RECESSED LIGHTS AND FAN/LIGHT COMBOS TO BE SEALED WITH A GASKET OR CAULK BETWEEN THE LUMINAIRE HOUSING AND CEILING, AND SHALL HAVE ALL AIR LEAK PATHS BETWEEN CONDITIONED AND UNCONDITIONED SPACES SEALED WITH A GASKET OR CAULK.
16. SUPPLY FAN SF–1: LOCATE LOCAL DISCONNECT SWITCH ABOVE CEILING ACCESSIBLE VIA ACCESS PANEL. IN ADDITION, PROVIDE SHUTOFF SWITCH IN A READILY ACCESSIBLE LOCATION WITH THE FOLLOWING PERMANENT PLAQUE:
"THIS SWITCH CONTROLS THE INDOOR AIR QUALITY VENTILATION FOR THE APARTMENT UNIT, LEAVE IT ON UNLESS THE OUTDOOR AIR QUALITY IS VERY POOR".
17. BACK TO BACK OUTLETS: WHERE OUTLETS ARE ON OPPOSITE SIDES OF SOUND RATED PARTITIONS, SEPARATION OF 16" RECOMMENDED, 12" MINIMUM; EXPOSED BACKS AND SIDES SHOULD BE TREATED WITH PUTTY PADS. IF NOT POSSIBLE DUE TO REQUIRED OUTLETS PER CEC, A GYPSUM BOARD OR SHEET METAL BACKER PLATE (MIN. 20"H X WIDTH OF STUD BAY) CENTERED BEHIND THE OUTLET IS REQUIRED. (ACOUSTICAL REQUIREMENT.)

KITCHEN

K1. KITCHEN RECEPTACLES & SWITCHES MOUNTED A MAXIMUM HEIGHT OF +44" AFF TO THE TOP OF DEVICE. REFER TO ARCHITECTURAL ELEVATIONS FOR EXACT HEIGHT AND MOUNTING.

K2. ON RAISED KITCHEN BARTOP, MOUNT HORIZONTALLY AT +43" AFF TO TOP OF BOX.

K3. L–SHAPED KITCHENS: ONE OUTLET MUST BE LOCATED A MINIMUM 36" FROM THE OUTSIDE OF THE CORNER FOR ACCESSIBILITY.

K4. PROVIDE GFCI/AFCI COMBINATION CIRCUIT BREAKERS FOR ALL RECEPTACLES LOCATED WITHIN 6–FT OF A KITCHEN SINK, THIS APPLIES TO KITCHEN APPLIANCE RECEPTACLES.

BATHROOM

B1. RESTROOM EXHAUST LIGHT/FAN – U5/M3: PANASONIC WHISPERGREEN EXHAUST FAN HAS LOW AND HIGH SETTING, SEE MECHANICAL SCHEDULE FOR EF–1. LOW SETTING ON 24/7. HIGH SETTING TO BE CONTROLLED BY INTEGRAL HUMIDISTAT & INTEGRAL MOTION SENSOR. COORDINATE ALL WIRING WITH INSTALLATION MANUAL. LIGHT TO BE CONTROLLED BY VACANCY SWITCH.

B2. BATHROOM: RECEPTACLE AND SWITCH TO BE 46" AFF TO TOP OF THE BOX.

B3. BATHROOM SWITCHING: FIRST SWITCH (VACANCY) IS TO CONTROL LIGHT IN THE FAN/LIGHT COMBO AND THE VANITY LIGHT.

DOORBELL SCHEDULE:

DOORBELL 120V POWER TO BE FROM NEAREST GENERAL PURPOSE LIGHTING/RECEPTACLE CIRCUIT. DOORBELL SYSTEM TO BE CAPABLE OF ADDING A VISUAL STROBE.

- DOORBELL PUSH–BUTTON:
  MODEL: NUTONE #PB41LSN
  CONFIRM FINISH WITH ARCH.
  MOUNTING: +48" TO TOP
- DOORBELL TRANSFORMER:
  MODEL: NUTONE #C905
  MOUNTING: LOCATED IN CLOSET
- DOORBELL CHIME:
  MODEL: NUTONE #LA11WH
  MOUNTING: +80" TO BOTTOM

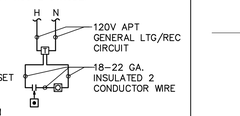

ACCESSIBLE AND COMMUNICATION UNITS:
PROVIDE VISUAL AND AUDIBLE ALARMS
- DOORBELL & STROBE: EDWARDS 6536–G5
- TRANSFORMER: EDWARDS 592
- PUSHBUTTON: EDWARDS 620/147–10
- (147–10 NAMEPLATE: "HOLD BUTTON FOR 5 SECONDS")

VAN METER WILLIAMS POLLACK LLP
ARCHITECTURE | URBAN DESIGN ★ SAN FRANCISCO | DENVER | MINNEAPOLIS
333 Bryant Street, Suite 300, San Francisco, CA 94107 T 415.974.5252

CIVIL ENGINEER
BKF ENGINEERS
1730 N. FIRST ST SUITE 600
SAN JOSE, CA 95112

JOINT TRENCH / DRY UTILITIES
MILLENIUM DESIGN
PO BOX 737
ALAMO, CA 94507

LANDSCAPE ARCHITECT
PLURAL STUDIO
2742 17TH STREET
SAN FRANCISCO, CA 94110

STRUCTURAL ENGINEER
HOHBACH-LEWIN, INC
250 SHERIDAN AVE STE 100
PALO ALTO, CA 94306

MEP ENGINEER
EMERALD CITY ENGINEERS
21705 HIGHWAY 99
LYNWOOD, WA 98036

ENERGY CONSULTANT
REDWOOD ENERGY
1887 Q STREET
ARCATA, CA 95521

EMERALD CITY ENGINEERS, INC
21705 Highway 99
Lynnwood, WA 98036
TEL: 425-741-1200

REGISTERED PROFESSIONAL ENGINEER — ADAM C. FRIPP — 21942E — EXP: 3-31-23 — ELECTRICAL — STATE OF CALIFORNIA

03-20-23

COUNTY OF SANTA CLARA
BUILDING INSPECTION OFFICE
PLANS APPROVED FOR PERMIT
RECORD NO.: DEV22-1242
BY: rick gomes DATE: 03/20/2023
PLANS APPROVED AS SUBMITTED
A COPY OF THIS APPROVED PLAN MUST BE ON THE JOB SITE AT ALL TIMES

ID	DATE:	NAME
1	11/11/2022	PERMIT CONVENTIONAL
A	12/16/2022	BID SET
2	03/03/2023	PLAN CHECK RESPONSE 2

Project:

EDUCATOR HOUSING
231 GRANT AVENUE

231 GRANT AVENUE
PALO ALTO, CA 94306

Client:

MERCY HOUSING/
ABODE COMMUNITIES

UNIT PLANS

JOB #: 2293-007
SCALE: AS NOTED

E4.06

PLAN CHECK RESPONSE 2 | DATE: 03/20/2023

COPYRIGHT 2023, EMERALD CITY ENGINEERS, INC.
K:\CLIENTS\2293-007 231 GRANT, PALO ALTO, CA\DWG\E406 UNIT PLANS.DWG 03-17-2023 11:43

FEEDER SCHEDULE

FEEDER AMPS	CONDUIT AND FEEDER	FEEDING THESE DEVICES
70	1-1/4"C,3#4,#4N,#8G	ELEV-1, ELEV-2
60	1-1/4"C,3#4,#4N,#10G	EM
100	1-1/2"C,3#1/0 AL,#1/0 AL N,#6 AL G	L1A
100	1-1/2"C,3#1/0 AL,#1/0 AL N	XFMR 4
175	2"C,3#2/0,#2/0N,#1/0G	FIRE PUMP
200	2-1/2"C,3#250kcmil AL,#250kcmil AL N,#4 AL G	EVP-3, EVP-6, M4A, P1A, P2A, P3B, W1A
200	2-1/2"C,3#250kcmil AL,#250kcmil AL N,#6G	HPF-LP
200	2-1/2"C,3#250kcmil AL,#250kcmil AL N,#2 AL G	HP-FLEX
300	3-1/2"C,3#500kcmil AL,#500kcmil AL N,#1 AL G	P3A
400	(2)2-1/2"C,3#250kcmil AL,#250kcmil AL N,#1 AL G	M1A, M1B, STK1, STK2
500	(2)3"C,3#350kcmil AL,#350kcmil AL N,#2/0 AL G	P1B, P1C
600	(2)3"C,3#500kcmil AL,#500kcmil AL N	XFMR 1, XFMR 2
800	(3)3"C,3#400kcmil AL,#400kcmil AL N,#3/0 AL G	EV PANEL
800	(3)2-1/2"C,3#300kcmil,#300kcmil N	MDP-FP
1200	(4)3-1/2"C,5#500kcmil AL,#500kcmil AL N,#250kcmil AL G	DISTRIBUTION A, DISTRIBUTION B
1200	(4)3"C,3#500kcmil AL,#500kcmil AL N	XFMR 3
2000	(6)4"C,3#600kcmil AL,#600kcmil AL N,#500kcmil AL G	HP

SIZING METHOD: COPPER/ALUMINUM, 60°C #12 THROUGH #1, 75°C 1/0 AND ABOVE

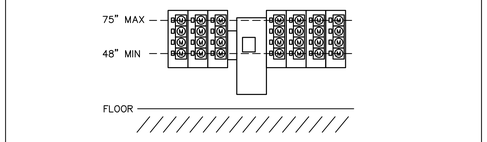

PER CPAU, ELECTRICAL METERS SHALL BE LOCATED ACCORDINGLY FOR MULTI-UNIT INSTALLATIONS:
-MINIMUM HEIGHT: 48" FROM THE FINISHED FLOOR TO THE CENTER OF THE METER.
-MAXIMUM HEIGHT: 75" FROM THE FINISHED FLOOR TO THE CENTER OF THE METER.
-A MAXIMUM OF 4 METERS MAY BE VERTICALLY STACKED.

METER HEIGHT REQUIREMENT 3

SCALE: NONE

CENTRAL 3PH INVERTER:

CFC 1206.2: STATIONARY STORAGE BATTERY SYSTEMS OF LEAD ACID TYPE HAVING CAPACITIES EXCEEDING 70KWH SHALL HAVE ADDITIONAL DESIGN PARAMETERS PER CFC 1206.2.

INV-1
MYERS INVERTER D-4-S 16.7KW

RUNTIME: 90 MINUTES
CURRENT: 81 AMPS

81A * 1.5HRS = 121.5AH
121.5AH * 240V/1000 = 29.16KWH
INVERTER DOES NOT EXCEED 70KWH THRESHOLD.

- AIC RATING TO MATCH UPSTREAM PANEL.
- PROVIDE MAIN BREAKER ON FIRST PANEL THAT IS DOWNSTREAM OF INVERTER.
- PROVIDE SURGE PROTECTIVE DEVICE ON ALL EMERGENCY AND LEGALLY REQUIRED STANDBY PANELBOARDS.
- INVERTERS TO BE LOCATED IN 2-HR RATED ROOMS PER NFPA 110.
- INVERTERS SHALL NOT BE LOCATED IN ROOMS WITH 480V SERVICE EQUIPMENT.
- PROVIDE MONITORING OF INVERTERS FROM FIRE ALARM SYSTEM.

DISAGGREGATION OF LOADS

2019 TITLE 24 - DISAGGREGATION OF LOADS:
[METER INSTALLATION NOT REQUIRED.]

1. LIGHTING INCLUDING EXIT AND EGRESS LIGHTING AND EXTERIOR LIGHTING. ALL LIGHTING BY AGGREGATE.
2. HVAC SYSTEMS AND COMPONENTS INCLUDING CHILLERS, FANS, HEATERS, FURNACES, PACKAGE UNITS, COOLING TOWERS, AND CIRC PUMPS ASSOCIATED WITH HVAC. ALL HVAC IN AGGRAGATE
3. DOMESTIC AND SERVICE WATER SYSTEM PUMPS AND RELATED SYSTEMS AND COMPONENTS. ALL LOADS IN AGGREGATE
4. PLUG LOAD INCLUDING APPLIANCES RATED LESS THAN 25KVA. ALL PLUG LOADS IN AGGREGATE, ALL GROUP OF PLUG LOADS EXCEEDING 25kVA CONNECTED LOAD IN AN AREA LESS THAN 5000SF.
5. ELEVATORS. ALL LOADS IN AGGREGATE.
   - N/A
6. OTHER INDIVIDUAL NON-HVAC LOADS OR APPLIANCES RATED 25KVA OR GREATER (EACH).
   - N/A
7. COMMERCIAL KITCHENS. EACH
   - N/A
8. RENEWABLE POWER SOURCE. EACH GROUP.
   - N/A
9. CHARGING STATIONS. ALL LOADS IN AGGREGATE.

HOUSE LOAD IS BETWEEN 50KVA AND LESS THAN 250KVA.

FLAG NOTES:

1. ELECTRICAL DESIGN IS BASED ON 20 HP ELEVATOR MOTORS AND ARE FOR PRICING PURPOSES ONLY. VERIFY EXACT ELEVATOR OVERCURRENT FEEDER SIZES WITH ELEVATOR VENDOR PRIOR TO PURCHASE OF DEVICES AND FEEDERS. PROVIDE ELEVATOR MODULE WHICH PROVIDES OVERCURRENT PROTECTION (THROUGH CLASS J FUSES), SHUNT TRIP CAPABILITIES, AUXILIARY CONTACT, AND SELECTIVE COORDINATION. BUSSMANN POWER SWITCH MODULE OR APPROVED EQUAL.
2. SPACE FOR CONNECTION OF FUTURE SOLAR PV PANEL. PROVIDE CIRCUIT BREAKER FRAME SUITABLE FOR BACKFEED. CONFIRM SIZE WITH SOLAR PV VENDOR.
3. TO GROUNDING ELECTRODE SYSTEM, SEE DETAIL 6/E6.04
4. LOCKABLE SOLAR DISCONNECT SWITCH, PROVIDED BY ELECTRICAL CONTRACTOR WITH CONDUIT ROUTED TO ROOF.
5. 16.7KW SELF-CONTAINED 3-PHASE INVERTER BATTERY SYSTEM, UL924, RATED FOR 90 MINUTE BACKUP FOR EMERGENCY LIGHTING. 208V/120V 3P4W INPUT/OUTPUT WITH MAIN BREAKER. UNIT IS FLOOR MOUNTED.
6. RETAIL SPACES: PROVIDE CONDUIT AND FEEDER FROM SWITCHGEAR TO JBOX ABOVE THE RETAIL DISTRIBUTION SECTION. PROVIDE CONDUIT WITH PULL STRING FROM JBOX TO RETAIL SPACE, SIZING AS SHOWN BELOW BASED ON AMPERAGE (JBOX AVOIDS SWITCHGEAR SHUTDOWN WITH RETAIL WORK): 200A: (1) 3" CONDUIT, 4#250KCMIL AL, #4ALG
7. CIRCUIT BREAKER 1200A OR GREATER, PROVIDE ENERGY-REDUCING MAINTENANCE SWITCH FOR ARC ENERGY REDUCTION PER CEC 240.87.
8. SHUNT TRIP EMERGENCY SHUTOFF SWITCH ON BUILDING EXTERIOR AT THE ENTRY. COORDINATE REQ. WITH PALO ALTO POWER & FIRE DEPARTMENT.
9. SHUNT TRIP EMERGENCY SHUTOFF SWITCH LOCATED INSIDE GARAGE FOR ABILITY TO SHUT OFF EV CHARGERS AND STACKERS. COORDINATE REQ. WITH PALO ALTO POWER & FIRE DEPARTMENT.

SHEET NOTES:

1. PROVIDE PG&E SMART METER CONDUITS PER GREENBOOK REQUIREMENTS, REFER TO FLOOR PLANS FOR LOCATION.
2. 2019 CALIFORNIA ENERGY CODE: VOLTAGE DROP FROM SERVICE POINT TO LOAD TO NOT EXCEED 5%
3. FIRE PUMP AND HOUSE METERS TO HAVE TEST-BYPASS.
4. CONTRACTOR TO PROVIDE ALL MATERIALS & LABOR TO PROVIDE CONDUIT FROM ELEVATOR CONTROL ROOM TO ELEVATOR SHAFT. COORDINATE WITH MANUFACTURER THE SIZE AND QUANTITY OF CONDUIT. ASSUME (4) 3" CONDUITS FOR PRICING.
5. EQUIPMENT MARKING SHALL BE PROVIDED FOR ALL ELECTRICAL EQUIPMENT PER CEC 110.21.
6. FURNISH AND INSTALL ARC-FLASH HAZARD MARKINGS FOR ALL EQUIPMENT PER 110.16. MARKINGS SHALL MEET THE REQUIREMENTS OF 110.21(B) AND SHALL BE CLEARLY VISIBLE TO QUALIFIED PERSONS BEFORE EXAMINATION, ADJUSTMENT, SERVICING, OR MAINTENANCE OF THE EQUIPMENT.
7. CIRCUIT BREAKER 1200A OR GREATER, PROVIDE ENERGY-REDUCING MAINTENANCE SWITCH FOR ARC ENERGY REDUCTION PER CEC 240.87.
8. CONTRACTOR TO SUBMIT SWITCHGEAR PLANS TO UTILITY PRIOR TO ORDERING.
9. CIRCUIT BREAKERS 400A AND LARGER TO HAVE FIELD-ADJUSTABLE, SHORT-TIME AND CONTINUOUS-CURRENT SETTINGS.
9. PROVIDE GFP TESTING APPROVAL BY 3RD PARTY TESTING AGENCY PRIOR TO REQUESTING ELECTRICAL METERS AND/OR ENERGIZING SERVICE EQUIPMENT.

FIRE PUMP

1.1. CEC 695.3(A)(1): FIRE PUMP TAP SHALL NOT BE WITHIN THE SAME VERTICAL SWITCHBOARD SECTION AS THE SERVICE DISCONNECTING MEANS.
1.2. CEC 695.14(F): CONTROL WIRING SHALL BE INDEPENDENT OF OTHER WIRES WITH 2-INCHES OF CONCRETE PROTECTION.
1.3. IF OVERCURRENT PROTECTION IS PROVIDED, IT MUST BE ABLE TO HANDLE LOCKED ROTOR CURRENT INDEFINITELY AND BE MONITORED BY THE FIRE ALARM SYSTEM.
1.4. THERE SHALL BE NO OVERLOAD PROTECTION OF FIRE PUMP.
1.5. CONDUCTORS SHALL BE SIZED TO HANDLE FLA AT 125%.
1.6. VOLTAGE DROP: MAX OF 5% WHEN FIRE PUMP IS RUNNING AT 115%.
1.7. FIRE PUMP SIZE IS SHOWN FOR BID PURPOSES ONLY. IF SIZE EXCEEDS DESIGN AS SHOWN, ENGINEER IS TO BE NOTIFIED IMMEDIATELY FOR DESIGN CHANGE REQUIREMENTS.
1.8. FIRE PUMP CONTROLLERS TO HAVE COPPER WIRING ONLY. NO ALUMINUM WIRING IS ALLOWED FOR FIRE PUMP CONTROLLERS.
1.9. ALL WIRING METHODS TO THE FIRE PUMP, DRIVE, CONTROLLER SHALL BE SUITABLE FOR WET LOCATIONS.
1.10. BREAKER IN THE FIRE PUMP ENCLOSURE SHALL BE MARKED "FIRE PUMP DISCONNECTING MEANS AND MUST BE CAPABLE OF BEING LOCKED IN THE CLOSED POSITION."
1.11. FIRE PUMP CIRCUIT CONDUITS INSIDE OF A BUILDING SHALL BE ENCASED IN NO LESS THAN 2" OF CONCRETE. 695.5(A)(2)(d)(1).

ELECTRIC VEHICLE (EV) CHARGERS

SANTA CLARA COUNTY REACH CODE:
SECTION 4.106.4.2 NEW MULTIFAMILY HOUSING:
FIRST 20 PARKING SPACES LEVEL 2 EV READY + 25% LEVEL 2 EV READY SPACES AND REMAINDER WITH LEVEL 1 EV READY.

SECTION 4.106.4.2.3 AUTOMATED LOAD MANAGEMENT SYSTEM SHALL BE ALLOWED TO MEET REQ. OF 4.106.4.2. (MINIMUM 1.4KW LOAD CAPACITY PER PARKING SPACE.)

112# TOTAL STALLS. MINIMUM NUMBER OF EV SPACES:
43# LEVEL 2 EV READY SPACES
69# LEVEL 1 EV READY SPACES

FIELD MODIFICATIONS/SWITCHGEAR APPROVAL

THE SERVICE EQUIPMENT MANUFACTURER IS TO PROVIDE DOCUMENTATION THAT SHOWS HOW THE LINE SIDE CONNECTION WILL BE ACHIEVED IN COMPLIANCE WITH THE PUBLISHED INSTALLATION INSTRUCTIONS FOR THE SERVICE EQUIPMENT. IF MODIFICATIONS ARE BEING PROPOSED THAT ARE NOT INCLUDED IN THE INSTALLATION INSTRUCTIONS, A FIELD EVALUATION OF THE SERVICE EQUIPMENT WILL BE REQUIRED. THE EQUIPMENT WILL NOT BE APPROVED BY THE EOR UNTIL THE DOCUMENTATION IS PROVIDED.

MODIFICATIONS TO LISTED EQUIPMENT SHALL BE EVALUATED, APPROVED, AND LABELED IN THE FIELD BY AN APPROVED FIELD EVALUATION BODY PRIOR TO REQUESTING FINAL INSPECTION FROM THE BUILDING DIVISION.

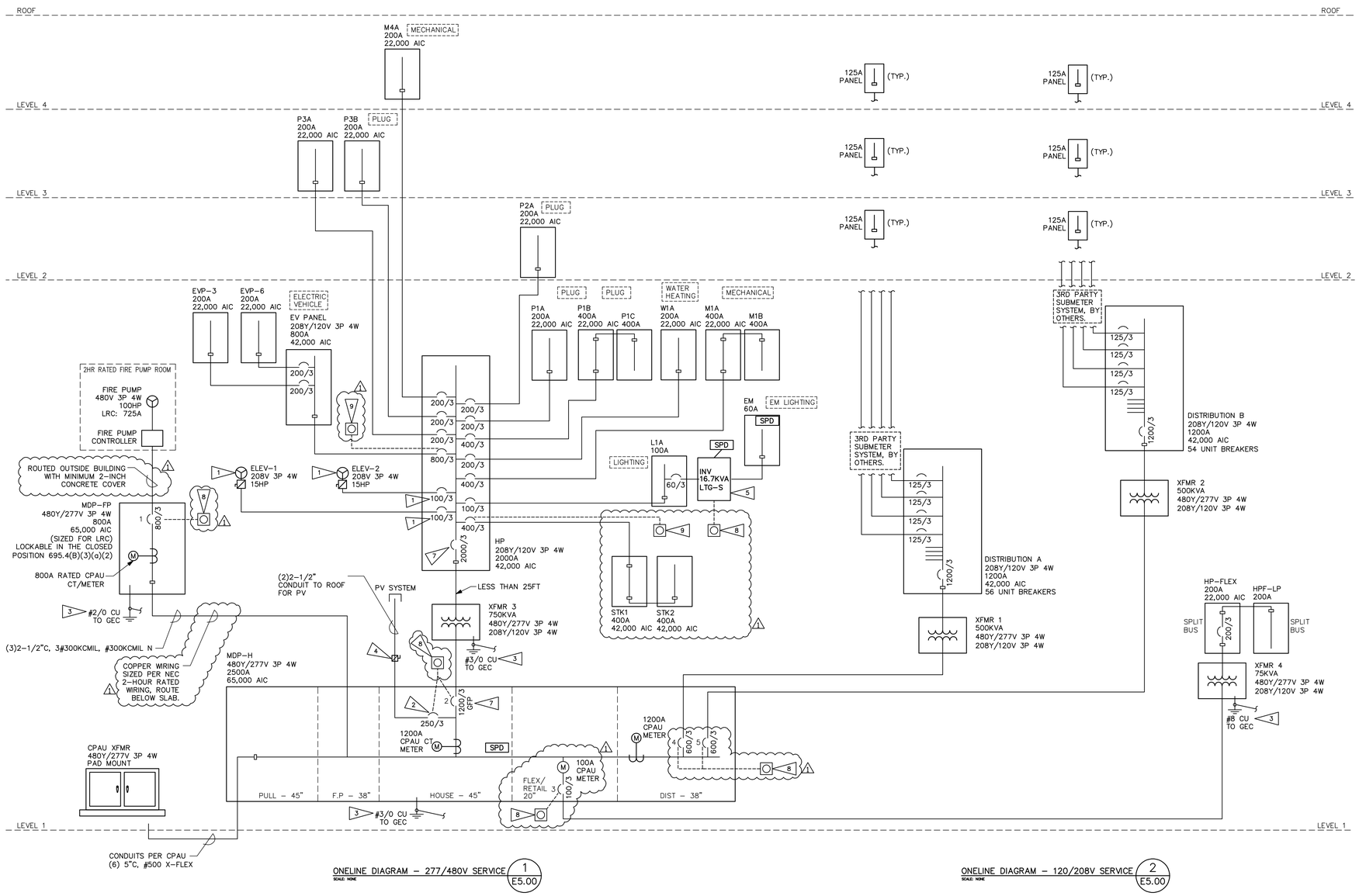

ONELINE DIAGRAM - 277/480V SERVICE 1 E5.00
SCALE: NONE

ONELINE DIAGRAM - 120/208V SERVICE 2 E5.00
SCALE: NONE

COPYRIGHT 2023, EMERALD CITY ENGINEERS, INC.
K:\CLAYTON_d:\2293-007 231 GRANT, PALO ALTO, CA\DWG\E500 ONE-LINE DIAGRAM.DWG 03-17-2023 11:43

VAN METER WILLIAMS POLLACK LLP
ARCHITECTURE | URBAN DESIGN | SAN FRANCISCO | DENVER | MINNEAPOLIS
333 Bryant Street, Suite 300, San Francisco, CA 94107 T 415.974.5252

CIVIL ENGINEER
BKF ENGINEERS
1730 N. FIRST ST SUITE 600
SAN JOSE, CA 95112

JOINT TRENCH / DRY UTILITIES
MILLENIUM DESIGN
PO BOX 737
ALAMO, CA 94507

LANDSCAPE ARCHITECT
PLURAL STUDIO
2742 17TH STREET
SAN FRANCISCO, CA 94110

STRUCTURAL ENGINEER
HOHBACH-LEWIN, INC
250 SHERIDAN AVE STE 100
PALO ALTO, CA 94306

MEP ENGINEER
EMERALD CITY ENGINEERS
21705 HIGHWAY 99
LYNNWOOD, WA 98036

ENERGY CONSULTANT
REDWOOD ENERGY
1887 G STREET
ARCATA, CA 95521

EMERALD CITY ENGINEERS, INC
21705 Highway 99
Lynnwood, WA 98036
TEL: 425-741-1200

REGISTERED PROFESSIONAL ENGINEER ADAM C. FRENCH E-31426 EXP. 3-31-24 ELECTRICAL STATE OF CALIFORNIA
03-20-23

COUNTY OF SANTA CLARA
BUILDING INSPECTION OFFICE
PLANS APPROVED FOR PERMIT
RECORD NO.: DEV22-1242
BY: rick.gomes Date: 07/28/2023
HARD COPY OF THESE STAMPED PLANS MUST BE ON THE JOB FOR INSPECTIONS

BY	DATE	PRELIMINARY NOTES
A	12/16/2022	BID SET
B	03/20/2023	BID ADDENDUM
2	03/20/2023	PLAN CHECK RESPONSE 2

Project:

EDUCATOR HOUSING
231 GRANT AVENUE

231 GRANT AVENUE
PALO ALTO, CA 94306

Client: mercy HOUSING / abode communities
MERCY HOUSING/
ABODE COMMUNITIES

ONE-LINE DIAGRAM

JOB #: 2293-007
SCALE: AS NOTED

E5.00

PLAN CHECK RESPONSE 2 | DATE: 03/20/2023

Dwelling Unit Load - Optional Calculation
Apartment - Studio

based on 2020 NEC

			Loads (kVA)
Dwelling square footage (ft^2)	373		
Lighting and receptacle load (220 - 82 (B))	3	(VA/ft^2)	1.1
Electric Clothes Dryer (220 - 54)	no		0
nameplate rating of Electric Stove			8.1
total load of fixed in place electric cooking (1.75 to < 3kW)			
total load of fixed in place electric cooking (3 to < 8kW)			
Small Appliance circuits (2 required in kitchen by 210-52)			3
All other appliance nameplate loads (220 - 82) (fixed in place)			6.48
Fixed in place appliances excluding stoves, dryers, space heating, A/C, microw ave, toaster, blender.			
Include dishwasher (1.4kw), microwave/hood (1.6kw), HEAT PUMP WATER HEATER (3.48KW)			
Laundry circuit (220 - 52)	no		0
Bathroom circuit not required in calc (210-11) - See examples in Appendix D			
Lighting and small appliance load (220-82), first 10 kVA at 100%, remainder at 40% (kVA)			18.7 / 13.5

Largest of Electric Heat, Air Conditioning, or Heat Pump with Electric Heat

NEC 220.82(C) Only include the largest of the selections to the right

INDIVIDUAL ELEC HEATERS		(if less than 4 units, @ 65%)
INDIVIDUAL ELEC HEATERS		(if more than 4 units, @ 40%)
AUX HEAT WITH HEAT PUMP	1.80	Calculated at 65%
COMPRESSOR	0.61	Calculated at 100%
AC		Calculated at 100%
		1.8

Total Demand Load (kVA): 15.3

Service Voltage: 208/120 - 1

Service Size (A): 73

Dwelling Unit Load - Optional Calculation
Apartment - 1 BED

based on 2020 NEC

			Loads (kVA)
Dwelling square footage (ft^2)	530		
Lighting and receptacle load (220 - 82 (B))	3	(VA/ft^2)	1.6
Electric Clothes Dryer (220 - 54)	no		0
nameplate rating of Electric Stove			8.1
total load of fixed in place electric cooking (1.75 to < 3kW)			
total load of fixed in place electric cooking (3 to < 8kW)			
Small Appliance circuits (2 required in kitchen by 210-52)			3
All other appliance nameplate loads (220 - 82) (fixed in place)			9.23
Fixed in place appliances excluding stoves, dryers, space heating, A/C, microw ave, toaster, blender.			
Include dishwasher (1.4kw), microwave/hood (1.6kw), HEAT PUMP WATER HEATER (6.23KW)			
Laundry circuit (220 - 52)	no		0
Bathroom circuit not required in calc (210-11) - See examples in Appendix D			
Lighting and small appliance load (220-82), first 10 kVA at 100%, remainder at 40% (kVA)			21.9 / 14.8

Largest of Electric Heat, Air Conditioning, or Heat Pump with Electric Heat

NEC 220.82(C) Only include the largest of the selections to the right

INDIVIDUAL ELEC HEATERS		(if less than 4 units, @ 65%)
INDIVIDUAL ELEC HEATERS		(if more than 4 units, @ 40%)
AUX HEAT WITH HEAT PUMP	2.70	Calculated at 65%
COMPRESSOR	1.21	Calculated at 100%
AC	0.00	Calculated at 100%
		3.0

Total Demand Load (kVA): 17.7

Service Voltage: 208/120 - 1

Service Size (A): 85

Dwelling Unit Load - Optional Calculation
Apartment - 2 Bed

based on 2020 NEC

			Loads (kVA)
Dwelling square footage (ft^2)	808		
Lighting and receptacle load (220 - 82 (B))	3	(VA/ft^2)	2.4
Electric Clothes Dryer (220 - 54)	yes		5
nameplate rating of Electric Stove			8.1
total load of fixed in place electric cooking (1.75 to < 3kW)			
total load of fixed in place electric cooking (3 to < 8kW)			
Small Appliance circuits (2 required in kitchen by 210-52)			3
All other appliance nameplate loads (220 - 82) (fixed in place)			9.23
Fixed in place appliances excluding stoves, dryers, space heating, A/C, microw ave, toaster, blender.			
Include dishwasher (1.4kw), microwave/hood (1.6kw), HEAT PUMP WATER HEATER (6.23kW)			
Laundry circuit (220 - 52)	yes		1.5
Bathroom circuit not required in calc (210-11) - See examples in Appendix D			
Lighting and small appliance load (220-82), first 10 kVA at 100%, remainder at 40% (kVA)			29.3 / 17.7

Largest of Electric Heat, Air Conditioning, or Heat Pump with Electric Heat

NEC 220 82(C) Only include the largest of the selections to the right

INDIVIDUAL ELEC HEATERS		(if less than 4 units, @ 65%)
INDIVIDUAL ELEC HEATERS		(if more than 4 units, @ 40%)
AUX HEAT WITH HEAT PUMP	3.60	Calculated at 65%
COMPRESSOR	1.81	Calculated at 100%
AC	0.00	Calculated at 100%
		4.2

Total Demand Load (kVA): 21.9

Service Voltage: 208/120 - 1

Service Size (A): 105

Dwelling Unit Load - Optional Calculation
Apartment - 2 BED Manager

based on 2020 NEC

			Loads (kVA)
Dwelling square footage (ft^2)	803		
Lighting and receptacle load (220 - 82 (B))	3	(VA/ft^2)	2.4
Electric Clothes Dryer (220 - 54)	yes		5
nameplate rating of Electric Stove			8.1
total load of fixed in place electric cooking (1.75 to < 3kW)			
total load of fixed in place electric cooking (3 to < 8kW)			
Small Appliance circuits (2 required in kitchen by 210-52)			3
All other appliance nameplate loads (220 - 82) (fixed in place)			10.43
Fixed in place appliances excluding stoves, dryers, space heating, A/C, microw ave, toaster, blender.			
Include dishwasher (1.4kw), disposer (1.2kw), microwave/hood (1.6kw), HEAT PUMP WATER HEATER (6.23kW)			
Laundry circuit (220 - 52)	yes		1.5
Bathroom circuit not required in calc (210-11) - See examples in Appendix D			
Lighting and small appliance load (220-82), first 10 kVA at 100%, remainder at 40% (kVA)			30.4 / 18.2

Largest of Electric Heat, Air Conditioning, or Heat Pump with Electric Heat

NEC 220 82(C) Only include the largest of the selections to the right

INDIVIDUAL ELEC HEATERS		(if less than 4 units, @ 65%)
INDIVIDUAL ELEC HEATERS		(if more than 4 units, @ 40%)
AUX HEAT WITH HEAT PUMP	3.60	Calculated at 65%
COMPRESSOR	1.81	Calculated at 100%
AC	0.00	Calculated at 100%
		4.2

Total Demand Load (kVA): 22.3

Service Voltage: 208/120 - 1

Service Size (A): 107

Apt. Service Load - Optional Calculation - DISTRIBUTION A

UNITS MUST HAVE ELECTRIC COOKING *AND* ELEC SPACE HEATING/COOLING

Job Number:	**2293-007**	**Run By:** **KC**	Printed :
Job Name:	**231 Grant**		11/11/22
Location:	**Palo Alto, CA**		6:24 PM

Apartment Load

	STUDIO	1BED	2BED		MNGR 2			
enter number of apts.	9	34	12		1			
total demand load per unit (kVA)	21.1	25.8	34.7		35.8			
unit demand times # of units	190.0	878.2	416.0		35.8			
undiversified load (kVA)	1520.0							
total number of apartments	56							
demand factor (%) (table 220 - 84)	24%							

General Demand Load for all apartments (kVA): 365

(AMPS @ 208v 3-phase): 1013

Apt. Service Load - Optional Calculation - DISTRIBUTION B

UNITS MUST HAVE ELECTRIC COOKING *AND* ELEC SPACE HEATING/COOLING

Job Number:	**2293-007**	**Run By:** **KC**	Printed :
Job Name:	**231 Grant**		11/11/22
Location:	**Palo Alto, CA**		6:24 PM

Apartment Load

	STUDIO	1BED	2BED		MNGR 2			
enter number of apts.	15	27	12		0			
total demand load per unit (kVA)	21.1	25.8	34.7		35.8			
unit demand times # of units	316.6	697.4	416.0		0.0			
undiversified load (kVA)	1430.0							
total number of apartments	54							
demand factor (%) (table 220 - 84)	25%							

General Demand Load for all apartments (kVA): 358

(AMPS @ 208v 3-phase): 992

FEEDER VOLTAGE DROP CALCULATIONS

Vd = VOLTAGE DROP
K = RESISTANCE IN OHMS OF ONE CIRCULAR MIL FOOT OF CONDUCTOR
[K = 12.9 FOR COPPER CONDUCTORS, K = 21.2 FOR ALUMINUM CONDUCTORS]
L = ONE-WAY LENGTH OF CIRCUIT
I = CURRENT
Cm = CROSS SECTION AREA OF CONDUCTOR

$$Vd = \frac{1.73K \times L \times I}{Cm}$$

PANEL	FEEDER LENGTH (ft)	CALCULATED LOAD (kVA)	VOLTAGE (Volts)	CURRENT (Amps)	WIRE SIZE (CU)	Cm (cmil)	VOLTAGE DROP (Volts)	% VOLT DROP
Distribution A	31	364.8	208	1012.6	(4) 500kcmil	2,000,000	0.6	0.28%
Distribution B	48	357.5	208	992.3	(4) 500kcmil	2,000,000	0.9	0.42%

DISTANCES SHOWN HERE ARE FOR FEEDER VOLTAGE DROP CALCULATIONS ONLY AND SHOULD NOT BE USED TO DETERMINE THE AMOUNT OF MATERIAL NEEDED FOR CONSTRUCTION.

COPYRIGHT 2023, EMERALD CITY ENGINEERS, INC.
K:\LAYTON\2293-007 231 GRANT, PALO ALTO, CA\2D\MEP\E501 LOAD CALCS UNIT PANEL & FEEDERS.DWG 03-17-2023 11:42

APARTMENT FEEDER SCHEDULE

VOLTAGE DROP DESIGN PARAMETERS:
2.5% ALLOWED MAXIMUM
MC CABLE

UNIT TYPE	FEEDER RANGE	FEEDER
STUDIO	UNDER 148 FT	2#1AL, #1AL N, #6AL G
STUDIO	148 - 187 FT	2#1/0AL, #1/0AL N, #4AL G
STUDIO	187 - 235 FT	2#2/0AL, #2/0AL N, #4AL G
STUDIO	235 - 297 FT	2#3/0AL, #3/0AL N, #3AL G
STUDIO	297 - 374 FT	2#4/0AL, #4/0AL N, #2AL G
STUDIO	374 - 442 FT	2#250AL, #250AL N, #1AL G
STUDIO	442 - 530 FT	2#300AL, #300AL N, #1/0AL G
1 BED	UNDER 128 FT	2#1AL, #1AL N, #6AL G
1 BED	128 - 161 FT	2#1/0AL, #1/0AL N, #4AL G
1 BED	161 - 203 FT	2#2/0AL, #2/0AL N, #4AL G
1 BED	203 - 256 FT	2#3/0AL, #3/0AL N, #3AL G
1 BED	256 - 323 FT	2#4/0AL, #4/0AL N, #2AL G
1 BED	323 - 382 FT	2#250AL, #250AL N, #1AL G
1 BED	382 - 458 FT	2#300AL, #300AL N, #1/0AL G
2 BED	UNDER 130 FT	2#1/0AL, #1/0AL N, #6AL G
2 BED	130 - 164 FT	2#2/0AL, #2/0AL N, #4AL G
2 BED	164 - 207 FT	2#3/0AL, #3/0AL N, #4AL G
2 BED	207 - 261 FT	2#4/0AL, #4/0AL N, #3AL G
2 BED	261 - 309 FT	2#250AL, #250AL N, #2AL G
2 BED	309 - 370 FT	2#300AL, #300AL N, #1AL G
2 BED	370 - 432 FT	2#350AL, #350AL N, #1/0AL G
2 BED MNGR	UNDER 128 FT	2#1/0AL, #1/0AL N, #6AL G
2 BED MNGR	128 - 161 FT	2#2/0AL, #2/0AL N, #4AL G
2 BED MNGR	161 - 203 FT	2#3/0AL, #3/0AL N, #4AL G
2 BED MNGR	203 - 257 FT	2#4/0AL, #4/0AL N, #3AL G
2 BED MNGR	257 - 303 FT	2#250AL, #250AL N, #2AL G
2 BED MNGR	303 - 364 FT	2#300AL, #300AL N, #1AL G
2 BED MNGR	364 - 424 FT	2#350AL, #350AL N, #1/0AL G

IT IS THE FULL RESPONSIBILITY OF THE ELECTRICAL CONTRACTOR TO DETERMINE FINAL FEEDER ROUTING. ROUTING SHOWN IS DIAGRAMMATIC. CONTRACTOR TO ENSURE ALL EQUIPMENT ORDERED CAN ACCOMMODATE THE WIRE SIZE AS SHOWN. EQUIPMENT SIZES SHOWN ARE THE MINIMUM REQUIRED BY CODE. LARGER EQUIPMENT MAY BE REQUIRED. JBOXES AND SPLICE BOXES ARE ALLOWED IF APPROVED BY THE LOCAL AHJ. WIRE SPLICE REDUCERS, WHEN NEEDED, AND IF APPROVED BY AHJ, ARE ACCEPTABLE. ANY ADDITIONAL INFORMATION IS TO BE REQUESTED DURING BIDDING. CHANGE ORDERS WILL NOT BE APPROVED.

CONTRACTOR TO NOTIFY ENGINEER DURING BIDDING PHASE IF FEEDER LENGTHS EXCEED THOSE SHOWN ON FEEDER SCHEDULE.

231 GRANT, PALO ALTO
22,000 AIC, MLO — 208Y/120V 2P 3W — FLUSH MOUNTING — 125 AMP BUS — #COVER FINISH#
UNIT TYPE STUDIO – SITE BUILT

CIRCUIT #	BKR SIZE	DESCRIPTION	CIRCUIT #	BKR SIZE	DESCRIPTION
1	40/2	STOVE	2	–	SPACE
3	|		4	–	SPACE
5	20/1	AFCI/GFCI MICRO/HOOD	6	–	SPACE
7	20/1	AFCI/GFCI DISHWASHER	8	15/1	AFCI RECEP, LIGHTING
9	–	SPACE	10	15/1	AFCI RECEP, LIGHTING, SMOKE DETECTOR
11	20/1	AFCI/GFCI KITCHEN RECEP., DINING	12	20/2	HPAC–1 <1>
13	20/1	AFCI/GFCI KITCHEN RECEP, REFRIG.	14	|	
15	15/1	AFCI SUPPLY FAN SF–1	16	–	SPACE
17	20/1	BATHROOM RECEP, FAN, LIGHTING	18	–	SPACE
19	–	SPACE	20	15/2	HEAT PUMP HOT WATER HEATER
21	–	SPACE	22	|	
23	–	SPACE	24	–	SPACE

231 GRANT, PALO ALTO
22,000 AIC, MLO — 208Y/120V 2P 3W — FLUSH MOUNTING — 125 AMP BUS — #COVER FINISH#
UNIT TYPE 1 BED – SITE BUILT

CIRCUIT #	BKR SIZE	DESCRIPTION	CIRCUIT #	BKR SIZE	DESCRIPTION
1	40/2	STOVE	2	–	SPACE
3	|		4	–	SPACE
5	20/1	AFCI/GFCI MICRO/HOOD	6	–	SPACE
7	20/1	AFCI/GFCI DISHWASHER	8	15/1	AFCI BEDROOM LIGHTING, RECEPTACLE
9	–	SPACE	10	15/1	AFCI LIVING RM RECEP, LIGHTING, SMOKE DETECTOR
11	20/1	AFCI/GFCI KITCHEN RECEP., DINING	12	20/2	HPAC–1 <1>
13	20/1	AFCI/GFCI KITCHEN RECEP, REFRIG.	14	|	
15	15/1	AFCI SUPPLY FAN SF–1	16	15/2	HPAC–2 <1>
17	20/1	BATHROOM RECEP, FAN, LIGHTING	18	|	
19	–	SPACE	20	30/2	HEAT PUMP HOT WATER HEATER
21	–	SPACE	22	|	
23	–	SPACE	24	–	SPACE

231 GRANT, PALO ALTO
22,000 AIC, MLO — 208Y/120V 2P 3W — FLUSH MOUNTING — 125 AMP BUS — #COVER FINISH#
UNIT TYPE 2 BED – SITE BUILT

CIRCUIT #	BKR SIZE	DESCRIPTION	CIRCUIT #	BKR SIZE	DESCRIPTION
1	40/2	STOVE	2	30/2	DRYER
3	|		4	|	
5	20/1	AFCI/GFCI MICRO/HOOD	6	20/1	AFCI/GFCI WASHER
7	20/1	AFCI/GFCI DISHWASHER	8	15/1	AFCI BEDROOM RECEP, LIGHTING
9	–	SPACE	10	15/1	AFCI LIVING ROOM RECEP, LIGHTING, SMOKE DETECTOR
11	20/1	AFCI/GFCI KITCHEN RECEP., DINING	12	20/2	HPAC–1 <1>
13	20/1	AFCI/GFCI KITCHEN RECEP, REFRIG.	14	|	
15	15/1	AFCI SUPPLY FAN SF–1	16	15/2	HPAC–2 <1>
17	20/1	BATHROOM RECEP, FAN, LIGHTING	18	|	
19	15/1	AFCI BEDROOM RECEP, LIGHTING	20	30/2	HEAT PUMP HOT WATER HEATER
21	20/2	HPAC–2 <1>	22	|	
23	|		24	15/1	AFCI LIVING ROOM RECEP, LIGHTING, DBF–1

231 GRANT, PALO ALTO
22,000 AIC, MLO — 208Y/120V 2P 3W — FLUSH MOUNTING — 125 AMP BUS — #COVER FINISH#
UNIT TYPE 1 BED – FIRST FLOOR SITE BUILT

CIRCUIT #	BKR SIZE	DESCRIPTION	CIRCUIT #	BKR SIZE	DESCRIPTION
1	40/2	STOVE	2	–	SPACE
3	|		4	–	SPACE
5	20/1	AFCI/GFCI MICRO/HOOD	6	–	SPACE
7	20/1	AFCI/GFCI DISHWASHER	8	15/1	AFCI BEDROOM RECEP, LIGHTING
9	–	SPACE	10	15/1	AFCI LIVING ROOM RECEP, LIGHTING, SMOKE DETECTOR
11	20/1	AFCI/GFCI KITCHEN RECEP., DINING	12	20/2	HPAC–1 <1>
13	20/1	AFCI/GFCI KITCHEN RECEP, REFRIG.	14	|	
15	15/1	AFCI SUPPLY FAN SF–1	16	15/2	HPAC–2 <1>
17	20/1	BATHROOM RECEP, FAN, LIGHTING	18	|	
19	–	SPACE	20	30/2	HEAT PUMP HOT WATER HEATER
21	–	SPACE	22	|	
23	–	SPACE	24	–	SPACE

231 GRANT, PALO ALTO
22,000 AIC, MLO — 208Y/120V 2P 3W — FLUSH MOUNTING — 125 AMP BUS — #COVER FINISH#
UNIT TYPE 2 BED MANAGER – FIRST FLOOR SITE BUILT

CIRCUIT #	BKR SIZE	DESCRIPTION	CIRCUIT #	BKR SIZE	DESCRIPTION
1	40/2	STOVE	2	30/2	DRYER
3	|		4	|	
5	20/1	AFCI/GFCI MICRO/HOOD	6	20/1	AFCI/GFCI WASHER
7	20/1	AFCI/GFCI DISHWASHER	8	15/1	AFCI BEDROOM RECEP, LIGHTING
9	20/1	AFCI/GFCI DISPOSAL	10	15/1	AFCI LIVING ROOM RECEP, LIGHTING, SMOKE DETECTOR
11	20/1	AFCI/GFCI KITCHEN RECEP., DINING	12	20/2	HPAC–1 <1>
13	20/1	AFCI/GFCI KITCHEN RECEP, REFRIG.	14	|	
15	15/1	AFCI SUPPLY FAN SF–1	16	15/2	HPAC–2 <1>
17	20/1	BATHROOM RECEP, FAN, LIGHTING	18	|	
19	15/1	AFCI BEDROOM RECEP, LIGHTING	20	30/2	HEAT PUMP HOT WATER HEATER
21	20/2	HPAC–2 <1>	22	|	
23	|		24	15/1	AFCI LIVING ROOM RECEP, LIGHTING, DBF–1

APT PANEL SCHEDULE SHEET NOTES	APT PANEL SCHEDULE FLAG NOTES
1. PANEL SIZE IS MINIMUM REQUIRED BY CODE. LARGER PANELS MAY BE REQUIRED TO ACCOMMODATE FEEDER. CONTRACTOR TO COORDINATE W/ SUPPLIER.	1 > CONFIRM BREAKER SIZE WITH HVAC SUBMITTAL PRIOR TO PURCHASE. 2 > PROVIDE LOCKABLE BREAKERS.

VAN METER WILLIAMS POLLACK LLP
ARCHITECTURE | URBAN DESIGN ■ SAN FRANCISCO | DENVER | MINNEAPOLIS
333 Bryant Street, Suite 300, San Francisco, CA 94107 T 415.974.5252

CIVIL ENGINEER
BKF ENGINEERS
1730 N. FIRST ST SUITE 600
SAN JOSE, CA 95112

JOINT TRENCH / DRY UTILITIES
MILLENIUM DESIGN
PO BOX 737
ALAMO, CA 94507

LANDSCAPE ARCHITECT
PLURAL STUDIO
2742 17TH STREET
SAN FRANCISCO, CA 94110

STRUCTURAL ENGINEER
HOHBACH-LEWIN, INC
250 SHERIDAN AVE STE 100
PALO ALTO, CA 94306

MEP ENGINEER
EMERALD CITY ENGINEERS
21705 HIGHWAY 99
LYNWOOD, WA 98036

ENERGY CONSULTANT
REDWOOD ENERGY
1887 Q STREET
ARCATA, CA 95521

EMERALD CITY ENGINEERS, INC
21705 Highway 99
Lynnwood, WA 98036
TEL: 425-741-1200

REGISTERED PROFESSIONAL ENGINEER — ADAM C. FRANCIS — ELECTRICAL — STATE OF CALIFORNIA — EXP. 3-31-24
03-20-23

COUNTY OF SANTA CLARA
BUILDING INSPECTION OFFICE
PLANS APPROVED FOR PERMIT
RECORD NO.: DEV22-1242
BY: rick.gomes Date: 07/28/2023
HARD COPY OF THESE STAMPED PLANS MUST BE ON SITE FOR INSPECTIONS

NO.	DATE	NAME
1	11/11/2022	PERMIT CONVENTIONAL
A	12/16/2022	BID SET
B	03/20/2023	BID ADDENDUM
2	03/20/2023	PLAN CHECK RESPONSE 2

Project:

EDUCATOR HOUSING
231 GRANT AVENUE

231 GRANT AVENUE
PALO ALTO, CA 94306

Client:
MERCY HOUSING/
ABODE COMMUNITIES

LOAD CALCS, UNIT PANEL & FEEDER SCHEDULES

JOB #: 2293-007
SCALE: AS NOTED

E5.01

PLAN CHECK RESPONSE 2 | DATE: 03/20/2023

FAULT CURRENT SCHEDULE

DEVICE	FAULT	AIC RATING	L-N VOLTS	FED FROM		FEEDER				TOTAL MOTOR	DIRECTLY CONNECTED MOTOR LOAD			
				DEVICE	FAULT	SIZE	X / 1000'	R / 1000'	LENGTH	FAULT	KVA	FAULT	X	R
MDP-FP	38,260	65,000	277V	MDP-H	42,000	(3)#300kcmil	0.0137	0.0147	50'	1,024	103	496	0.5418	0.1354
XFMR 1	33,388	42,000	120V	MDP-H	42,000	(2)#500kcmil AL	0.0195	0.0215	52'	309				
DISTRIBUTION A	30,989	42,000	120V	XFMR 1	33,079	(4)#500kcmil AL	0.0098	0.0108	23'	264				
XFMR 2	33,515	42,000	120V	MDP-H	42,000	(2)#500kcmil AL	0.0195	0.0215	49'	312				
DISTRIBUTION B	30,319	42,000	120V	XFMR 2	33,203	(4)#500kcmil AL	0.0098	0.0108	31'	253				
XFMR 3	27,451	42,000	120V	MDP-H	42,000	(4)#500kcmil AL	0.0098	0.0108	53'	1,736				
HP	26,603	42,000	120V	XFMR 3	25,715	(6)#600kcmil AL	0.0065	0.006	21'	1,735	34.9	388	0.3003	0.07507
ELEV-1	1,826	10,000	120V	HP	24,868	#4	0.048	0.31	203'		17.5	194	0.6006	0.1501
ELEV-2	1,806	10,000	120V	HP	24,868	#4	0.048	0.31	206'		17.5	194	0.6006	0.1501
EV PANEL	22,449	42,000	120V	HP	24,868	(3)#400kcmil AL	0.0133	0.018	46'	1,236				
EVP-3	5,743	22,000	120V	EV PANEL	21,213	#250kcmil AL	0.041	0.085	177'	64				
EVP-6	6,755	22,000	120V	EV PANEL	21,213	#250kcmil AL	0.041	0.085	143'	90				
L1A	14,059	22,000	120V	HP	24,868	#1/0 AL	0.044	0.2	27'	406				
EM	7,843	22,000	120V	L1A	13,653	#4	0.048	0.31	24'	99				
M1A	19,446	22,000	120V	HP	24,868	(2)#250kcmil AL	0.0205	0.0425	48'	957	11	122	0.9553	0.2388
M1B	17,918	22,000	120V	M1A	18,489	(2)#250kcmil AL	0.0205	0.0425	13'	802				
M4A	6,327	22,000	120V	HP	24,868	#250kcmil AL	0.041	0.085	167'	78				
P1A	19,103	22,000	120V	HP	24,868	#250kcmil AL	0.041	0.085	25'	910	7.79	87	1.345	0.3363
P1B	10,489	22,000	120V	HP	24,868	(2)#350kcmil AL	0.02	0.0305	224'	597				
P1C	10,098	22,000	120V	P1B	9,892	(2)#350kcmil AL	0.02	0.0305	14'	582	37.8	419	0.2777	0.06944
P2A	8,900	22,000	120V	HP	24,868	#250kcmil AL	0.041	0.085	108'	173	1	11	10.49	2.621
P3A	10,069	22,000	120V	HP	24,868	#500kcmil AL	0.039	0.043	146'	642	43.2	480	0.2427	0.06068
P3B	4,521	22,000	120V	HP	24,868	#250kcmil AL	0.041	0.085	249'	49	1	11	10.49	2.621
STK1	21,434	42,000	120V	HP	24,868	(2)#250kcmil AL	0.0205	0.0425	33'	1,168	9	100	1.165	0.2913
STK2	18,949	42,000	120V	STK1	20,266	(2)#250kcmil AL	0.0205	0.0425	19'	913	6	67	1.748	0.4369
W1A	15,037	22,000	120V	HP	24,868	#250kcmil AL	0.041	0.085	46'	517				
XFMR 4	9,979	42,000	120V	MDP-H	42,000	#1/0 AL	0.044	0.2	42'	28				
HP-FLEX	3,253	22,000	120V	XFMR 4	9,951	#250kcmil AL	0.041	0.085	291'	2				
HPF-LP	3,149	22,000	120V	HP-FLEX	3,251	#250kcmil AL	0.041	0.085	13'	2				

FEEDER DISTANCES SHOWN ARE FOR FAULT CURRENT CALCULATIONS ONLY AND ARE NOT TO BE USED TO DETERMINE THE AMOUNT OF MATERIAL.

CPAU'S CONTRIBUTION TO THE AVAILABLE FAULT AT THE SECONDARY TERMINALS OF THE UTILITY TRANSFORMER IS 42,000 AIC PER CPAU.

MDP-H

ROOM | VOLTS 480Y/277V 3P 4W | AIC 65,000
MOUNTING FLOOR | BUS AMPS 2500 | MAIN BKR MLO
FED FROM CPAU XFMR | NEUTRAL 100% | LUGS STANDARD
NOTE

CKT #	CIRCUIT DESCRIPTION	KVA LOAD A	B	C	BREAKER TRIP/POLES	FEEDER RACEWAY AND CONDUCTORS
1	SWITCHBOARD MDP-FP	34.4	34.4	34.4	-/3	(3)2-1/2"C,3#300kcmil,#300kcmil N
2	XFMR XFMR 3	183	180	166	1200/3	(4)3"C,3#500kcmil AL,#500kcmil AL N
3	XFMR XFMR 4	9.29	2.77	5.34	100/3	1-1/2"C,3#1/0 AL,#1/0 AL N
4	XFMR XFMR 1	507	507	507	600/3	(2)3"C,3#500kcmil AL,#500kcmil AL N
5	XFMR XFMR 2	477	477	477	600/3	(2)3"C,3#500kcmil AL,#500kcmil AL N
	TOTAL CONNECTED KVA BY PHASE	1,210	1,200	1,190		

	CONN. KVA	CALC. KVA			CONN. KVA	CALC. KVA	
LIGHTING	15.9	19.8	(125%)	CONTINUOUS	182	227	(125%)
LARGEST MOTOR	103	129	(125%)	HEATING	119	119	(100%)
OTHER MOTORS	152	152	(100%)	NONCONTINUOUS	27.9	27.9	(100%)
RECEPTACLES	39.9	24.9	(50%>10)	KITCHEN EQUIP	10.1	9.1	(90%)
METERBANK	2,950	679	(23%)	NONCOIN/DIVERSE	0	0	(N/A)
GST ROOMS	0	0	(50%)	TOTAL KVA	3,600	1,390	
				BALANCED THREE PHASE AMPS		1,670	
		4,370		4,330		4,290	

MDP-FP

ROOM | VOLTS 480Y/277V 3P 4W | AIC 65,000
MOUNTING FLOOR | BUS AMPS 800 | MAIN BKR MLO
FED FROM MDP-H | NEUTRAL 100% | LUGS STANDARD
NOTE

CKT #	CIRCUIT DESCRIPTION	KVA LOAD A	B	C	BREAKER TRIP/POLES	FEEDER RACEWAY AND CONDUCTORS
1	FIRE PUMP	34.4	34.4	34.4	800/3	2"C,3#2/0,#2/0N,#1/0G
	TOTAL CONNECTED KVA BY PHASE	34.4	34.4	34.4		

	CONN. KVA	CALC. KVA			CONN. KVA	CALC. KVA	
LIGHTING	0	0	(125%)	CONTINUOUS	0	0	(125%)
LARGEST MOTOR	103	129	(125%)	HEATING	0	0	(100%)
OTHER MOTORS	0	0	(100%)	NONCONTINUOUS	0	0	(100%)
RECEPTACLES	0	0	(50%>10)	KITCHEN EQUIP	0	0	(N/A)
METERBANK	0	0	(23%)	NONCOIN/DIVERSE	0	0	(N/A)
GST ROOMS	0	0	(50%)	TOTAL KVA	103	129	
				BALANCED THREE PHASE AMPS		155	
		124		124		124	

HP

Panel | Room | Volts 208Y/120V 3P 4W | AIC 42,000
Mounting FLOOR | Bus Amps 2000 | Main Bkr 2000
Fed from XFMR 3 | Neutral 100% | Lugs STANDARD
Note:

CKT #	CKT BKR	LOAD KVA	CIRCUIT DESCRIPTION		CKT #	CKT BKR	LOAD KVA	CIRCUIT DESCRIPTION
1	100/3	17.5	ELEV-1	a	2	100/3	17.5	ELEV-2
3	|			b	4	|		
5	|			c	6	|		
7	400/3	15	PANEL STK1	a	8	100/3	15.4	PANEL L1A
9	|			b	10	|		
11	|			c	12	|		
13	400/3	98.7	PANEL M1A	a	14	200/3	7.32	PANEL M4A
15	|			b	16	|		
17	|			c	18	|		
19	200/3	19.3	PANEL P1A	a	20	400/3	69.6	PANEL P1B
21	|			b	22	|		
23	|			c	24	|		
25	200/3	61.3	PANEL P3A	a	26	200/3	9.49	PANEL P3B
27	|			b	28	|		
29	|			c	30	|		
31	200/3	26.4	PANEL W1A	a	32	200/3	14.8	PANEL P2A
33	|			b	34	|		
35	|			c	36	|		
37	800/3	157	PANEL EV PANEL	a	38	-/3	0	FUTURE PV
39	|			b	40	|		
41	|			c	42	|		

	CONN. KVA	CALC. KVA			CONN. KVA	CALC. KVA	
LIGHTING	15.7	19.6	(125%)	CONTINUOUS	181	226	(125%)
LARGEST MOTOR	17.5	21.8	(125%)	HEATING	103	103	(100%)
OTHER MOTORS	134	134	(100%)	NONCONTINUOUS	27.8	27.8	(100%)
RECEPTACLES	39.5	24.8	(50%>10)	KITCHEN EQUIP	10.1	9.1	(90%)
METERBANK	0	0	(23%)	NONCOIN/DIVERSE	0	0	(N/A)
GST ROOMS	0	0	(50%)	TOTAL KVA	529	567	
				BALANCED THREE PHASE AMPS		1,570	

PHASE BALANCE PERCENT: PHASE A 104% PHASE B 102% PHASE C 94.1%

HP-FLEX

Panel | Room | Volts 208Y/120V 3P 4W | AIC 22,000
Mounting SURFACE | Bus Amps 200 | Main Bkr 200
Fed from XFMR 4 | Neutral 100% | Lugs FEEDTHRU
Note: SPLIT-BUS

CKT #	CKT BKR	LOAD KVA	CIRCUIT DESCRIPTION		CKT #	CKT BKR	LOAD KVA	CIRCUIT DESCRIPTION
1	20/1	1.5	EWH-2	a	2	30/2	3.95	HP-6
3	20/1	0	SPARE	b	4	|		
5	20/1	0	SPARE	c	6	70/2	10.5	FCU-6
7	20/1	0	SPARE	a	8	|		
9	20/1	0	SPARE	b	10	20/1	0.1	EF-3B
11	20/1	0	SPARE	c	12	20/1	0.1	EF-3C
13	20/1	0	SPARE	a	14	20/1	0.05	FSD
15	20/1	0	SPARE	b	16	20/1	0.696	SF-6
17	20/1	0	SPARE	c	18	20/1	0	SPARE
19	20/1	0	SPARE	a	20	20/1	0	SPARE
21	20/1	0	SPARE	b	22	20/1	0	SPARE
23	20/1	0	SPARE	c	24	20/1	0	SPARE
25	20/1	0	SPARE	a	26	20/1	0	SPARE
27	20/1	0	SPARE	b	28	20/1	0	SPARE
29	20/1	0	SPARE	c	30	20/1	0	SPARE
31	20/1	0	SPARE	a	32	20/1	0	SPARE
33	20/1	0	SPARE	b	34	20/1	0	SPARE
35	20/1	0	SPARE	c	36	20/1	0	SPARE
37	20/1	0	SPARE	a	38	20/1	0	SPARE
39	20/1	0	SPARE	b	40	20/1	0	SPARE
41	20/1	0	SPARE	c	42	20/1	0	SPARE
	LUG LOAD: 0.526 KVA PANEL HPF-LP							

	CONN. KVA	CALC. KVA			CONN. KVA	CALC. KVA	
LIGHTING	0.166	0.207	(125%)	CONTINUOUS	0.896	1.12	(125%)
LARGEST MOTOR	0	0	(125%)	HEATING	15.9	15.9	(100%)
OTHER MOTORS	0	0	(100%)	NONCONTINUOUS	0.05	0.05	(100%)
RECEPTACLES	0.36	0.36	(50%>10)	KITCHEN EQUIP	0	0	(N/A)
METERBANK	0	0	(23%)	NONCOIN/DIVERSE	0	0	(N/A)
GST ROOMS	0	0	(50%)	TOTAL KVA	17.4	17.7	
				BALANCED THREE PHASE AMPS		49.1	

PHASE BALANCE PERCENT: PHASE A 153% PHASE B 48.3% PHASE C 98.9%

HPF-LP

Panel | Room | Volts 208Y/120V 3P 4W | AIC 22,000
Mounting SURFACE | Bus Amps 200 | Main Bkr MLO
Fed from HP-FLEX | Neutral 100% | Lugs STANDARD
Note: SPLIT-BUS

CKT #	CKT BKR	LOAD KVA	CIRCUIT DESCRIPTION		CKT #	CKT BKR	LOAD KVA	CIRCUIT DESCRIPTION
1	20/1	0.36	RECEPTACLE	a	2	20/1	0.166	LIGHTING
3	20/1	0	SPARE	b	4	20/1	0	SPARE
5	20/1	0	SPARE	c	6	20/1	0	SPARE
7	20/1	0	SPARE	a	8	20/1	0	SPARE
9	20/1	0	SPARE	b	10	20/1	0	SPARE
11	20/1	0	SPARE	c	12	20/1	0	SPARE
13	20/1	0	SPARE	a	14	20/1	0	SPARE
15	20/1	0	SPARE	b	16	20/1	0	SPARE
17	20/1	0	SPARE	c	18	20/1	0	SPARE
19	20/1	0	SPARE	a	20	20/1	0	SPARE
21	20/1	0	SPARE	b	22	20/1	0	SPARE
23	20/1	0	SPARE	c	24	20/1	0	SPARE
25	20/1	0	SPARE	a	26	20/1	0	SPARE
27	20/1	0	SPARE	b	28	20/1	0	SPARE
29	20/1	0	SPARE	c	30	20/1	0	SPARE
31	20/1	0	SPARE	a	32	20/1	0	SPARE
33	20/1	0	SPARE	b	34	20/1	0	SPARE
35	20/1	0	SPARE	c	36	20/1	0	SPARE
37	20/1	0	SPARE	a	38	20/1	0	SPARE
39	20/1	0	SPARE	b	40	20/1	0	SPARE
41	20/1	0	SPARE	c	42	20/1	0	SPARE

	CONN. KVA	CALC. KVA			CONN. KVA	CALC. KVA	
LIGHTING	0.166	0.207	(125%)	CONTINUOUS	0	0	(125%)
LARGEST MOTOR	0	0	(125%)	HEATING	0	0	(100%)
OTHER MOTORS	0	0	(100%)	NONCONTINUOUS	0	0	(100%)
RECEPTACLES	0.36	0.36	(50%>10)	KITCHEN EQUIP	0	0	(N/A)
METERBANK	0	0	(23%)	NONCOIN/DIVERSE	0	0	(N/A)
GST ROOMS	0	0	(50%)	TOTAL KVA	0.526	0.567	
				BALANCED THREE PHASE AMPS		1.57	

PHASE BALANCE PERCENT: PHASE A 300% PHASE B 0% PHASE C 0%

EVP-3

Panel | Room | Volts 208Y/120V 3P 4W | AIC 22,000
Mounting SURFACE | Bus Amps 200 | Main Bkr MLO
Fed from EV PANEL | Neutral 100% | Lugs STANDARD
Note: NEMA 3R, VIA ALMS, CONFIRM LOCATION

CKT #	CKT BKR	LOAD KVA	CIRCUIT DESCRIPTION		CKT #	CKT BKR	LOAD KVA	CIRCUIT DESCRIPTION
1	40/2	1.4	EVSE W/ ALMS	a	2	40/2	1.4	EVSE W/ ALMS
3	|			b	4	|		
5	40/2	1.4	EVSE W/ ALMS	c	6	40/2	1.4	EVSE W/ ALMS
7	|			a	8	|		
9	40/2	1.4	EVSE W/ ALMS	b	10	40/2	1.4	EVSE W/ ALMS
11	|			c	12	|		
13	40/2	1.4	EVSE W/ ALMS	a	14	40/2	1.4	EVSE W/ ALMS
15	|			b	16	|		
17	40/2	1.4	EVSE W/ ALMS	c	18	40/2	1.4	EVSE W/ ALMS
19	|			a	20	|		
21	40/2	1.4	EVSE W/ ALMS	b	22	40/2	1.4	EVSE W/ ALMS
23	|			c	24	|		
25	40/2	1.4	EVSE W/ ALMS	a	26	40/2	1.4	EVSE W/ ALMS
27	|			b	28	|		
29	40/2	1.4	EVSE W/ ALMS	c	30	40/2	1.4	EVSE W/ ALMS
31	|			a	32	|		
33	40/2	1.4	EVSE W/ ALMS	b	34	40/2	1.4	EVSE W/ ALMS
35	|			c	36	|		
37	40/2	1.4	EVSE W/ ALMS	a	38	40/2	1.4	EVSE W/ ALMS
39	|			b	40	|		
41	40/2	1.4	EVSE W/ ALMS	c	42	20/2	0	SPARE
43	|			a	44	|		

	CONN. KVA	CALC. KVA			CONN. KVA	CALC. KVA	
LIGHTING	0	0	(125%)	CONTINUOUS	29.4	36.8	(125%)
LARGEST MOTOR	0	0	(125%)	HEATING	0	0	(100%)
OTHER MOTORS	0	0	(100%)	NONCONTINUOUS	0	0	(100%)
RECEPTACLES	0	0	(50%>10)	KITCHEN EQUIP	0	0	(N/A)
METERBANK	0	0	(23%)	NONCOIN/DIVERSE	0	0	(N/A)
GST ROOMS	0	0	(50%)	TOTAL KVA	29.4	36.8	
				BALANCED THREE PHASE AMPS		102	

PHASE BALANCE PERCENT: PHASE A 107% PHASE B 100% PHASE C 92.8%

EVP-6

Panel | Room | Volts 208Y/120V 3P 4W | AIC 22,000
Mounting SURFACE | Bus Amps 200 | Main Bkr MLO
Fed from EV PANEL | Neutral 100% | Lugs STANDARD
Note: VIA ALMS, CONFIRM LOCATION

CKT #	CKT BKR	LOAD KVA	CIRCUIT DESCRIPTION		CKT #	CKT BKR	LOAD KVA	CIRCUIT DESCRIPTION
1	40/2	1.4	EVSE W/ ALMS	a	2	40/2	1.4	EV READY W/ ALMS
3	|			b	4	|		
5	40/2	1.4	EV READY W/ ALMS	c	6	40/2	1.4	EV READY W/ ALMS
7	|			a	8	|		
9	40/2	1.4	EV READY W/ ALMS	b	10	20/1	0	SPARE
11	|			c	12	20/1	0	SPARE
13	20/1	0	SPARE	a	14	20/1	0	SPARE
15	20/1	0	SPARE	b	16	20/1	0	SPARE
17	20/1	0	SPARE	c	18	20/1	0	SPARE
19	20/1	0	SPARE	a	20	20/1	0	SPARE
21	20/1	0	SPARE	b	22	20/1	0	SPARE
23	20/1	0	SPARE	c	24	20/1	0	SPARE
25	20/1	0	SPARE	a	26	20/1	0	SPARE
27	20/1	0	SPARE	b	28	20/1	0	SPARE
29	20/1	0	SPARE	c	30	20/1	0	SPARE
31	20/1	0	SPARE	a	32	20/1	0	SPARE
33	20/1	0	SPARE	b	34	20/1	0	SPARE
35	20/1	0	SPARE	c	36	20/1	0	SPARE
37	20/1	0	SPARE	a	38	20/1	0	SPARE
39	20/1	0	SPARE	b	40	20/1	0	SPARE
41	20/1	0	SPARE	c	42	20/1	0	SPARE
43	20/1	0	SPARE	a	44	20/1	0	SPARE

	CONN. KVA	CALC. KVA			CONN. KVA	CALC. KVA	
LIGHTING	0	0	(125%)	CONTINUOUS	7	8.75	(125%)
LARGEST MOTOR	0	0	(125%)	HEATING	0	0	(100%)
OTHER MOTORS	0	0	(100%)	NONCONTINUOUS	0	0	(100%)
RECEPTACLES	0	0	(50%>10)	KITCHEN EQUIP	0	0	(N/A)
METERBANK	0	0	(23%)	NONCOIN/DIVERSE	0	0	(N/A)
GST ROOMS	0	0	(50%)	TOTAL KVA	7	8.75	
				BALANCED THREE PHASE AMPS		24.3	

PHASE BALANCE PERCENT: PHASE A 119% PHASE B 90.7% PHASE C 90.7%

EV PANEL

Panel | Room | Volts 208Y/120V 3P 4W | AIC 42,000
Mounting SURFACE | Bus Amps 800 | Main Bkr MLO
Fed from HP | Neutral 100% | Lugs STANDARD
Note: EMERGENCY EV SHUTOFF LOCATED NEAR PANEL

CKT #	CKT BKR	LOAD KVA	CIRCUIT DESCRIPTION		CKT #	CKT BKR	LOAD KVA	CIRCUIT DESCRIPTION
1	200/3	35	FUTURE EV SUBPANEL 1 CONFIRM BRKR WITH EV INSTALLER DRAWINGS	a	2	200/3	32.2	FUTURE EV SUBPANEL 4 CONFIRM BRKR WITH EV INSTALLER DRAWINGS
3	|			b	4	|		
5	|			c	6	|		
7	200/3	15.4	FUTURE EV SUBPANEL 2 CONFIRM BRKR WITH EV INSTALLER DRAWINGS	a	8	200/3	37.8	FUTURE EV SUBPANEL 5 CONFIRM BRKR WITH EV INSTALLER DRAWINGS
9	|			b	10	|		
11	|			c	12	|		
13	200/3	29.4	PANEL EVP-3	a	14	200/3	7	PANEL EVP-6
15	|			b	16	|		
17	|			c	18	|		
19	20/1	0	SPARE	a	20	20/1	0	SPARE
21	20/1	0	SPARE	b	22	20/1	0	SPARE
23	20/1	0	SPARE	c	24	20/1	0	SPARE
25	20/1	0	SPARE	a	26	20/1	0	SPARE
27	20/1	0	SPARE	b	28	20/1	0	SPARE
29	20/1	0	SPARE	c	30	20/1	0	SPARE
31	20/1	0	SPARE	a	32	20/1	0	SPARE
33	20/1	0	SPARE	b	34	20/1	0	SPARE
35	20/1	0	SPARE	c	36	20/1	0	SPARE
37	20/1	0	SPARE	a	38	20/1	0	SPARE
39	20/1	0	SPARE	b	40	20/1	0	SPARE
41	20/1	0	SPARE	c	42	20/1	0	SPARE

	CONN. KVA	CALC. KVA			CONN. KVA	CALC. KVA	
LIGHTING	0	0	(125%)	CONTINUOUS	157	196	(125%)
LARGEST MOTOR	0	0	(125%)	HEATING	0	0	(100%)
OTHER MOTORS	0	0	(100%)	NONCONTINUOUS	0	0	(100%)
RECEPTACLES	0	0	(50%>10)	KITCHEN EQUIP	0	0	(N/A)
METERBANK	0	0	(23%)	NONCOIN/DIVERSE	0	0	(N/A)
GST ROOMS	0	0	(50%)	TOTAL KVA	157	196	
				BALANCED THREE PHASE AMPS		544	

PHASE BALANCE PERCENT: PHASE A 102% PHASE B 99.6% PHASE C 98.2%

COPYRIGHT 2023, EMERALD CITY ENGINEERS, INC.
K:\LATTON J\2293-007 231 GRANT, PALO ALTO, CA\DWG\E502 FAULT AND PANEL SCHEDULES.DWG 03-17-2023 11:42

VAN METER WILLIAMS POLLACK LLP
ARCHITECTURE | URBAN DESIGN | SAN FRANCISCO | DENVER | MINNEAPOLIS
333 Bryant Street, Suite 300, San Francisco, CA 94107 T 415.974.5252

CIVIL ENGINEER
BKF ENGINEERS
1730 N. FIRST ST SUITE 600
SAN JOSE, CA 95112

JOINT TRENCH / DRY UTILITIES
MILLENIUM DESIGN
PO BOX 737
ALAMO, CA 94507

LANDSCAPE ARCHITECT
PLURAL STUDIO
2742 17TH STREET
SAN FRANCISCO, CA 94110

STRUCTURAL ENGINEER
HOHBACH-LEWIN, INC
250 SHERIDAN AVE STE 100
PALO ALTO, CA 94306

MEP ENGINEER
EMERALD CITY ENGINEERS
21705 HIGHWAY 99
LYNWOOD, WA 98036

ENERGY CONSULTANT
REDWOOD ENERGY
1887 Q STREET
ARCATA, CA 95521

EMERALD CITY ENGINEERS, INC
21705 Highway 99
Lynnwood, WA 98036
TEL: 425-741-1200

REGISTERED PROFESSIONAL ENGINEER
ADAM C. FRENCH
E19421
EXP. 3-31-23
ELECTRICAL
STATE OF CALIFORNIA
03-20-23

COUNTY OF SANTA CLARA
BUILDING INSPECTION OFFICE
PLANS APPROVED FOR PERMIT
RECORD NO.: DEV22-1242
BY: rick.gomes Date: 07/28/2023
KEEP A COPY OF THESE STAMPED PLANS ON THE JOB SITE FOR INSPECTIONS

ID	DATE	BRIEF DESCRIPTION
1	11/18/2022	PLAN CHECK RESPONSE 1
A	12/16/2022	BID SET
B	03/20/2023	BID ADDENDUM
2	03/20/2023	PLAN CHECK RESPONSE 2

Project:

EDUCATOR HOUSING
231 GRANT AVENUE

231 GRANT AVENUE
PALO ALTO, CA 94306

Client:
mercy HOUSING
abode communities
MERCY HOUSING/
ABODE COMMUNITIES

FAULT AND PANEL SCHEDULES

JOB #: 2293-007
SCALE: AS NOTED

E5.02

PLAN CHECK RESPONSE 2 | DATE: 03/20/2023

L1A

Panel: L1A | Room: | Mounting: SURFACE | Fed from: HP | Note: | Volts: 208Y/120V 3P 4W | Bus Amps: 100 | Neutral: 100% | AIC: 22,000 | Main Bkr: MLO | Lugs: STANDARD

CKT #	CKT BKR	LOAD KVA	CIRCUIT DESCRIPTION		CKT #	CKT BKR	LOAD KVA	CIRCUIT DESCRIPTION
1	60/3	8.16	PANEL EM	a	2	20/1	0.168	ELEV PIT LIGHTING
3	|			b	4	20/1	0.168	ELEV PIT LIGHTING
5	|			c	6	20/1	0.062	ECR LIGHTING
7	20/1	0.221	ELEC RM LIGHTING	a	8	20/1	0.168	ELEV SHAFT LIGHTING
9	20/1	0.064	MPOE RM LIGHTING	b	10	20/1	0.168	ELEV SHAFT LIGHTING
11	20/1	0.13	FP BP RMS LIGHTING	c	12	20/1	0.5	CAR LIGHTS
13	20/1	0.595	STRG TRASH PARCEL LIGHTING	a	14	20/1	0.5	CAR LIGHTS
15	20/1	0.163	LOBBY PENDANT LIGHTING	b	16	20/1	0.526	LOBBY STAIR LIGHTING
17	20/1	0.576	BIKE/STRG LIGHTING	c	18	20/1	0.304	W STAIR LIGHTING
19	20/1	0.091	CMNTY RM LIGHTING	a	20	20/1	0.304	E STAIR LIGHTING
21	20/1	0.591	W PARKING LIGHTING	b	22	20/1	0	SPARE
23	20/1	0.591	W PARKING LIGHTING	c	24	20/1	0	SPARE
25	20/1	0.457	E PARKING LIGHTING	a	26	20/1	0	SPARE
27	20/1	0.429	E PARKING LIGHTING	b	28	20/1	0	SPARE
29	20/1	0.232	SW PERIMETER LIGHTING	c	30	20/1	0	SPARE
31	20/1	0.186	SE PERIMETER LIGHTING	a	32	20/1	0	SPARE
33	20/1	0	SPARE	b	34	20/1	0	SPARE
35	20/1	0	SPARE	c	36	20/1	0	SPARE
37	20/1	0	SPARE	a	38	20/1	0	SPARE
39	20/1	0	SPARE	b	40	20/1	0	SPARE
41	20/1	0	SPARE	c	42	20/1	0	SPARE

	CONN. KVA	CALC. KVA		CONN. KVA	CALC. KVA	
LIGHTING	15.4	19.2	(125%)	CONTINUOUS	0	0	(125%)
LARGEST MOTOR	0	0	(125%)	HEATING	0	0	(100%)
OTHER MOTORS	0	0	(100%)	NONCONTINUOUS	0	0	(100%)
RECEPTACLES	0	0	(50%>10)	KITCHEN EQUIP	0	0	(N/A)
METERBANK	0	0	(23%)	NONCOIN/DIVERSE	0	0	(N/A)
GST ROOMS	0	0	(50%)	TOTAL KVA	15.4	19.2	

BALANCED THREE PHASE AMPS 53.3

PHASE BALANCE PERCENT: PHASE A **108%** PHASE B **94.9%** PHASE C **97.3%**

EM

Panel: EM | Room: | Mounting: SURFACE | Fed from: L1A | Note: | Volts: 208Y/120V 3P 4W | Bus Amps: 60 | Neutral: 100% | AIC: 22,000 | Main Bkr: MLO | Lugs: STANDARD

CKT #	CKT BKR	LOAD KVA	CIRCUIT DESCRIPTION		CKT #	CKT BKR	LOAD KVA	CIRCUIT DESCRIPTION
1	20/1	0.132	LOBBY LIGHTING	a	2	20/1	0.197	L2 W CRTYRD LIGHTING
3	20/1	0	SPARE	b	4	20/1	0.479	L2 EGRSS BLCNY LIGHTING
5	20/1	0	SPARE	c	6	20/1	0.246	L2 C CRTYRD LIGHTING
7	20/1	0	SPARE	a	8	20/1	0.368	L2 E CRTYRD LIGHTING
9	20/1	0.092	L1 W CORR LIGHTING	b	10	20/1	0.348	NW PERIMETER LIGHTING
11	20/1	0.111	L1 W CORR LIGHTING	c	12	20/1	0.314	NE SCONCE LIGHTING
13	20/1	0.101	L1 E CORR LIGHTING	a	14	20/1	0.217	W PERIMETER LIGHTING
15	20/1	0.09	L1 E CORR LIGHTING	b	16	20/1	0.24	NE DOWNLIGHT LIGHTING
17	20/1	0.198	OFFICE MTG LIGHTING	c	18	20/1	0.127	LANDSCAPE LIGHTING
19	20/1	0.429	MNGR SERV LIGHTING	a	20	20/1	0.148	E PERIMETER LIGHTING
21	20/1	0.276	CMNTY RM LIGHTING	b	22	20/1	0	SPARE
23	20/1	0.353	CMNTY RM LIGHTING	c	24	20/1	0	SPARE
25	20/1	0.383	L2 W CORR LIGHTING	a	26	20/1	0.279	L2 E CORR LIGHTING
27	20/1	0.322	L2 W CORR LIGHTING	b	28	20/1	0.252	L2 E CORR LIGHTING
29	20/1	0.381	L3 W CORR LIGHTING	c	30	20/1	0.279	L3 E CORR LIGHTING
31	20/1	0.324	L3 W CORR LIGHTING	a	32	20/1	0.252	L3 E CORR LIGHTING
33	20/1	0.383	L4 W CORR LIGHTING	b	34	20/1	0.268	L4 E CORR LIGHTING
35	20/1	0.322	L4 W CORR LIGHTING	c	36	20/1	0.252	L4 E CORR LIGHTING
37	20/1	0	SPARE	a	38	20/1	0	SPARE
39	20/1	0	SPARE	b	40	20/1	0	SPARE
41	20/1	0	SPARE	c	42	20/1	0	SPARE

	CONN. KVA	CALC. KVA		CONN. KVA	CALC. KVA	
LIGHTING	8.16	10.2	(125%)	CONTINUOUS	0	0	(125%)
LARGEST MOTOR	0	0	(125%)	HEATING	0	0	(100%)
OTHER MOTORS	0	0	(100%)	NONCONTINUOUS	0	0	(100%)
RECEPTACLES	0	0	(50%>10)	KITCHEN EQUIP	0	0	(N/A)
METERBANK	0	0	(23%)	NONCOIN/DIVERSE	0	0	(N/A)
GST ROOMS	0	0	(50%)	TOTAL KVA	8.16	10.2	

BALANCED THREE PHASE AMPS 28.3

PHASE BALANCE PERCENT: PHASE A **104%** PHASE B **101%** PHASE C **95%**

M1A

Panel: M1A | Room: | Mounting: SURFACE | Fed from: HP | Note: | Volts: 208Y/120V 3P 4W | Bus Amps: 400 | Neutral: 100% | AIC: 22,000 | Main Bkr: FEEDTHRU | Lugs: FEEDTHRU

CKT #	CKT BKR	LOAD KVA	CIRCUIT DESCRIPTION		CKT #	CKT BKR	LOAD KVA	CIRCUIT DESCRIPTION
1	30/3	6.32	GEF-1	a	2	20/1	0.25	CAR FAN
3	|			b	4	20/1	0.25	CAR FAN
5	|			c	6	20/3	1.33	GTF-1
7	20/2	3.12	OAC-3	a	8	|		
9	|			b	10	|		
11	20/2	3.12	OAC-4	c	12	20/1	0.696	EF-7B
13	|			a	14	20/1	0.696	EF-2
15	20/2	3.12	OAC-2	b	16	20/1	0.468	EF-4
17	|			c	18	20/1	0.3	FSD
19	15/2	1.87	HP-4	a	20	20/1	0.25	FSD
21	|			b	22	20/1	0.05	FSD
23	20/2	2.45	HP-3	c	24	20/1	0.1	FSD
25	|			a	26	20/1	0.15	FSD
27	20/2	1.87	HP-2	b	28	20/1	0.15	FSD
29	|			c	30	20/1	0.15	FSD
31	20/3	2.83	EF-11	a	32	20/1	0.15	FSD
33	|			b	34	20/1	0	SPARE
35	|			c	36	20/1	0	SPARE
37	70/2	10.6	FCU-3	a	38	20/1	0	SPARE
39	|			b	40	20/1	0	SPARE
41	20/1	0	SPARE	c	42	20/1	0	SPARE

LUG LOAD: 58.4 KVA PANEL M1B

	CONN. KVA	CALC. KVA		CONN. KVA	CALC. KVA	
LIGHTING	0	0	(125%)	CONTINUOUS	8.16	10.2	(125%)
LARGEST MOTOR	6.32	7.9	(125%)	HEATING	77	77	(100%)
OTHER MOTORS	4.66	4.66	(100%)	NONCONTINUOUS	2.6	2.6	(100%)
RECEPTACLES	0	0	(50%>10)	KITCHEN EQUIP	0	0	(N/A)
METERBANK	0	0	(23%)	NONCOIN/DIVERSE	0	0	(N/A)
GST ROOMS	0	0	(50%)	TOTAL KVA	98.7	102	

BALANCED THREE PHASE AMPS 284

PHASE BALANCE PERCENT: PHASE A **108%** PHASE B **101%** PHASE C **90.8%**

M1B

Panel: M1B | Room: | Mounting: SURFACE | Fed from: M1A | Note: | Volts: 208Y/120V 3P 4W | Bus Amps: 400 | Neutral: 100% | AIC: 22,000 | Main Bkr: MLO | Lugs: STANDARD

CKT #	CKT BKR	LOAD KVA	CIRCUIT DESCRIPTION		CKT #	CKT BKR	LOAD KVA	CIRCUIT DESCRIPTION
1	20/2	2.45	OAC-1	a	2	20/1	1.18	EF-8A
3	|			b	4	20/1	1.18	EF-8B
5	20/2	3.95	IAC-1	c	6	20/1	0.1	EF-9A
7	|			a	8	20/1	0.1	EF-9B
9	20/2	3.12	OAC-5	b	10	20/1	0.05	FSD
11	|			c	12	20/1	0.05	FSD
13	25/2	3.43	HP-8	a	14	20/1	0.696	EF-10
15	|			b	16	20/1	0.1	EF-5B
17	25/2	3.43	HP-7	c	18	20/1	0.1	SF-9
19	|			a	20	20/1	0.25	FSD
21	50/2	5.99	HP-1	b	22	20/1	0.696	EF-5
23	|			c	24	20/1	0.05	FSD
25	50/2	8.74	FCU-7	a	26	20/1	0.696	EF-7A
27	|			b	28	20/1	0.1	EF-3A
29	50/2	11	FCU-1	c	30	20/1	0.1	EF-3D
31	|			a	32	20/1	0.05	FSD
33	50/2	8.74	FCU-8	b	34	20/1	0.05	FSD
35	|			c	36	20/1	0.696	SF-3
37	20/1	0.05	FSD	a	38	20/1	0.468	SF-4
39	20/1	0.05	FSD	b	40	20/1	0.1	SF-5
41	20/1	0	SPARE	c	42	20/1	0.696	SF-7

	CONN. KVA	CALC. KVA		CONN. KVA	CALC. KVA	
LIGHTING	0	0	(125%)	CONTINUOUS	6.3	7.88	(125%)
LARGEST MOTOR	0	0	(125%)	HEATING	50.8	50.8	(100%)
OTHER MOTORS	0	0	(100%)	NONCONTINUOUS	1.3	1.3	(100%)
RECEPTACLES	0	0	(50%>10)	KITCHEN EQUIP	0	0	(N/A)
METERBANK	0	0	(23%)	NONCOIN/DIVERSE	0	0	(N/A)
GST ROOMS	0	0	(50%)	TOTAL KVA	58.4	60	

BALANCED THREE PHASE AMPS 167

PHASE BALANCE PERCENT: PHASE A **103%** PHASE B **95.3%** PHASE C **102%**

M4A

Panel: M4A | Room: | Mounting: SURFACE | Fed from: HP | Note: | Volts: 208Y/120V 3P 4W | Bus Amps: 200 | Neutral: 100% | AIC: 22,000 | Main Bkr: MLO | Lugs: STANDARD

CKT #	CKT BKR	LOAD KVA	CIRCUIT DESCRIPTION		CKT #	CKT BKR	LOAD KVA	CIRCUIT DESCRIPTION
1	20/3	0.862	SF-10A	a	2	20/3	0.694	EF-6
3	|			b	4	|		
5	|			c	6	|		
7	20/3	0.862	SF-10B	a	8	20/1	1.18	EF-8C
9	|			b	10	20/1	0.1	EF-9E
11	|			c	12	20/1	0.1	EF-9F
13	20/3	0.862	SF-10C	a	14	20/1	0.1	FSD
15	|			b	16	20/1	0.1	EF-9D
17	|			c	18	20/1	0.1	EF-9C
19	20/3	0.862	SF-10D	a	20	20/1	0.1	EF-9D
21	|			b	22	20/1	0.468	SF-11A
23	|			c	24	20/1	0.468	SF-11B
25	20/1	0	SPARE	a	26	20/1	0.468	SF-11C
27	20/1	0	SPARE	b	28	20/1	0	SPARE
29	20/1	0	SPARE	c	30	20/1	0	SPARE
31	20/1	0	SPARE	a	32	20/1	0	SPARE
33	20/1	0	SPARE	b	34	20/1	0	SPARE
35	20/1	0	SPARE	c	36	20/1	0	SPARE
37	20/1	0	SPARE	a	38	20/1	0	SPARE
39	20/1	0	SPARE	b	40	20/1	0	SPARE
41	20/1	0	SPARE	c	42	20/1	0	SPARE

	CONN. KVA	CALC. KVA		CONN. KVA	CALC. KVA	
LIGHTING	0	0	(125%)	CONTINUOUS	7.12	8.9	(125%)
LARGEST MOTOR	0	0	(125%)	HEATING	0	0	(100%)
OTHER MOTORS	0	0	(100%)	NONCONTINUOUS	0.2	0.2	(100%)
RECEPTACLES	0	0	(50%>10)	KITCHEN EQUIP	0	0	(N/A)
METERBANK	0	0	(23%)	NONCOIN/DIVERSE	0	0	(N/A)
GST ROOMS	0	0	(50%)	TOTAL KVA	7.32	9.1	

BALANCED THREE PHASE AMPS 25.3

PHASE BALANCE PERCENT: PHASE A **132%** PHASE B **83.9%** PHASE C **83.9%**

P1A

Panel: P1A | Room: | Mounting: SURFACE | Fed from: HP | Note: | Volts: 208Y/120V 3P 4W | Bus Amps: 200 | Neutral: 100% | AIC: 22,000 | Main Bkr: MLO | Lugs: STANDARD

CKT #	CKT BKR	LOAD KVA	CIRCUIT DESCRIPTION		CKT #	CKT BKR	LOAD KVA	CIRCUIT DESCRIPTION
1	20/3	2.49	GARAGE DOOR W	a	2	20/1	1.3	TRASH CHUTE COMP
3	|			b	4	20/1	0.1	*GFCI BRKR* TRASH CHUTE
5	|			c	6	20/1	0.1	*GFCI BRKR* TRASH CHUTE
7	20/1	0.36	ELEC RM RECEPTACLE	a	8	20/1	0.1	*GFCI BRKR* TRASH CHUTE
9	20/1	0.18	MPOE RM RECEPTACLE	b	10	20/1	1.2	ERRCS
11	20/1	0.72	MPOE RECEPTACLE	c	12	20/1	1.2	ERRCS
13	20/1	0.72	MPOE RECEPTACLE	a	14	20/1	0.18	RECEPTACLE
15	20/1	0.72	MPOE RECEPTACLE	b	16	20/1	0.36	RECEPTACLE
17	20/1	0.18	MAINT. RM RECEPTACLE	c	18	20/1	0.36	TRASH RM RECEPTACLE
19	20/1	0.36	MAINT. RM RECEPTACLE	a	20	20/1	1	GATE
21	20/1	0.18	RECEPTACLE	b	22	20/1	1	POWERED DOOR
23	20/1	0.18	RECEPTACLE	c	24	20/1	0.36	RECEPTACLE
25	20/1	0.18	PACKAGE LOCKERS	a	26	20/1	0.5	INTERCOM
27	20/1	0.18	PACKAGE LOCKERS	b	28	20/1	1	POWERED DOOR
29	20/1	0.72	CORR WEST 1 RECEPTACLE	c	30	20/1	0.3	2-WAY COMM
31	20/1	1	FACP	a	32	20/1	0	ANNUNCIATOR PANEL
33	20/1	0.9	FA-PS	b	34	20/1	0.18	RECEPTACLE
35	20/1	0	SPARE	c	36	20/1	0	SPARE
37	20/1	0	SPARE	a	38	20/1	0	SPARE
39	20/1	0	SPARE	b	40	20/1	0	SPARE
41	20/1	0	SPARE	c	42	20/1	0	SPARE

	CONN. KVA	CALC. KVA		CONN. KVA	CALC. KVA	
LIGHTING	0	0	(125%)	CONTINUOUS	3	3.75	(125%)
LARGEST MOTOR	2.49	3.12	(125%)	HEATING	0	0	(100%)
OTHER MOTORS	5.3	5.3	(100%)	NONCONTINUOUS	2.4	2.4	(100%)
RECEPTACLES	6.12	6.12	(50%>10)	KITCHEN EQUIP	0	0	(N/A)
METERBANK	0	0	(23%)	NONCOIN/DIVERSE	0	0	(N/A)
GST ROOMS	0	0	(50%)	TOTAL KVA	19.3	20.7	

BALANCED THREE PHASE AMPS 57.4

PHASE BALANCE PERCENT: PHASE A **101%** PHASE B **106%** PHASE C **92.4%**

P1B

Panel: P1B | Room: | Mounting: FLUSH | Fed from: HP | Note: | Volts: 208Y/120V 3P 4W | Bus Amps: 400 | Neutral: 100% | AIC: 22,000 | Main Bkr: FEEDTHRU | Lugs: FEEDTHRU

CKT #	CKT BKR	LOAD KVA	CIRCUIT DESCRIPTION		CKT #	CKT BKR	LOAD KVA	CIRCUIT DESCRIPTION
1	20/1	0.18	ELEV PIT RECEPTACLE	a	2	40/2	8.1	STOVE
3	20/1	0.18	ELEV PIT RECEPTACLE	b	4	|		
5	20/1	0.18	ECR RECEPTACLE	c	6	20/1	0.3	*GFCI BRKR* HOOD
7	20/1	0.36	LOBBY BOOTH RECEPTACLE	a	8	20/1	1.2	*GFCI BRKR* DISPOSAL
9	20/1	0.36	LOBBY BOOTH RECEPTACLE	b	10	20/1	1.2	*GFCI BRKR* DISHWASHER
11	20/1	0.72	CORR EAST 1 RECEPTACLE	c	12	20/1	0.54	*GFCI BRKR* RECEPTACLE
13	20/1	0.9	MEETING RECEPTACLE	a	14	20/1	1.18	*GFCI BRKR* REFRIG, RECEPTACLE
15	20/1	1.26	SERV OFFICE RECEPTACLE	b	16	20/1	0.03	*GFCI BRKR* DRINKING FOUNTAIN
17	20/1	1	COPIER/FAX	c	18	20/1	0.54	CMNTY RM RECEPTACLE
19	20/1	0.18	SERVER RM RECEPTACLE	a	20	20/1	0.72	CMNTY RM RECEPTACLE
21	20/1	0.36	SERVER RECEPTACLE	b	22	20/1	0.72	CMNTY RM RECEPTACLE
23	20/1	0.36	SERVER RECEPTACLE	c	24	20/1	0.18	WC RECEPTACLE
25	20/1	0.18	COM STOR RECEPTACLE	a	26	20/1	0.18	WC RECEPTACLE
27	20/1	0.18	RES STOR RECEPTACLE	b	28	20/1	0.36	INTERVIEW RECEPTACLE
29	20/1	0.2	*GFCI BRKR* PAPER TOWEL	c	30	20/1	0.9	PM OFFICE RECEPTACLE
31	20/1	0.2	*GFCI BRKR* PAPER TOWEL	a	32	20/1	1	*GFCI BRKR* REFRIG
33	20/1	0	SPARE	b	34	20/1	0.36	PM BREAK RECEPTACLE
35	20/1	0	SPARE	c	36	20/1	0.54	AST PM OFFICE RECEPTACLE
37	20/1	0	SPARE	a	38	20/1	0.54	PM OFFICE RECEPTACLE
39	20/1	0	SPARE	b	40	20/1	0.9	PM OFFICE RECEPTACLE
41	20/1	0	SPARE	c	42	20/1	0	SPARE

LUG LOAD: 43.3 KVA PANEL P1C

	CONN. KVA	CALC. KVA		CONN. KVA	CALC. KVA	
LIGHTING	0	0	(125%)	CONTINUOUS	4.3	5.38	(125%)
LARGEST MOTOR	11.6	14.5	(125%)	HEATING	0	0	(100%)
OTHER MOTORS	26.1	26.1	(100%)	NONCONTINUOUS	3.13	3.13	(100%)
RECEPTACLES	14.3	12.2	(50%>10)	KITCHEN EQUIP	10.1	9.1	(90%)
METERBANK	0	0	(23%)	NONCOIN/DIVERSE	0	0	(N/A)
GST ROOMS	0	0	(50%)	TOTAL KVA	69.6	70.4	

BALANCED THREE PHASE AMPS 195

PHASE BALANCE PERCENT: PHASE A **109%** PHASE B **107%** PHASE C **84.2%**

P1C

Panel: P1C | Room: | Mounting: SURFACE | Fed from: P1B | Note: | Volts: 208Y/120V 3P 4W | Bus Amps: 400 | Neutral: 100% | AIC: 22,000 | Main Bkr: MLO | Lugs: STANDARD

CKT #	CKT BKR	LOAD KVA	CIRCUIT DESCRIPTION		CKT #	CKT BKR	LOAD KVA	CIRCUIT DESCRIPTION
1	90/3	23.3	BP-1	a	2	20/3	3.99	JOCKEY PUMP
3	|			b	4	|		
5	|			c	6	|		
7	20/3	2.49	GARAGE DOOR E	a	8	20/3	4.99	EPS-1
9	|			b	10	|		
11	|			c	12	|		
13	20/1	0.4	EBIKE	a	14	20/1	0.4	EBIKE
15	20/1	0.6	EBIKE	b	16	20/1	0.4	EBIKE
17	20/1	0.6	EBIKE	c	18	20/1	0.6	EBIKE
19	20/1	0.4	EBIKE	a	20	20/1	0.4	EBIKE
21	20/1	0.36	BIKE RM RECEPTACLE	b	22	20/1	0.36	RECEPTACLE
23	20/1	0.18	BP RM RECEPTACLE	c	24	20/1	0.18	RECEPTACLE
25	20/1	0.18	FP RM RECEPTACLE	a	26	20/1	1	POWERED DOOR
27	20/1	0.5	*GFCI BRKR* IRRIGATION CTRL	b	28	20/1	1	POWERED DOOR
29	20/1	0	SPARE	c	30	20/1	1	POWERED DOOR
31	20/1	0	SPARE	a	32	20/1	0	SPARE
33	20/1	0	SPARE	b	34	20/1	0	SPARE
35	20/1	0	SPARE	c	36	20/1	0	SPARE
37	20/1	0	SPARE	a	38	20/1	0	SPARE
39	20/1	0	SPARE	b	40	20/1	0	SPARE
41	20/1	0	SPARE	c	42	20/1	0	SPARE

	CONN. KVA	CALC. KVA		CONN. KVA	CALC. KVA	
LIGHTING	0	0	(125%)	CONTINUOUS	4.3	5.38	(125%)
LARGEST MOTOR	11.6	14.5	(125%)	HEATING	0	0	(100%)
OTHER MOTORS	26.1	26.1	(100%)	NONCONTINUOUS	0	0	(100%)
RECEPTACLES	1.26	1.26	(50%>10)	KITCHEN EQUIP	0	0	(N/A)
METERBANK	0	0	(23%)	NONCOIN/DIVERSE	0	0	(N/A)
GST ROOMS	0	0	(50%)	TOTAL KVA	43.3	47.3	

BALANCED THREE PHASE AMPS 131

PHASE BALANCE PERCENT: PHASE A **99.5%** PHASE B **103%** PHASE C **98%**

P2A

Panel: P2A | Room: | Mounting: SURFACE | Fed from: HP | Note: | Volts: 208Y/120V 3P 4W | Bus Amps: 200 | Neutral: 100% | AIC: 22,000 | Main Bkr: MLO | Lugs: STANDARD

CKT #	CKT BKR	LOAD KVA	CIRCUIT DESCRIPTION		CKT #	CKT BKR	LOAD KVA	CIRCUIT DESCRIPTION
1	20/1	0.18	RECEPTACLE	a	2	20/1	0.18	RECEPTACLE
3	20/1	0.72	IDF-2W RECEPTACLE	b	4	20/1	0.36	RECEPTACLE
5	20/1	0.72	IDF-3W RECEPTACLE	c	6	20/2	1.3	GRILL ELEC
7	20/1	0.72	IDF-4W RECEPTACLE	a	8	|		
9	20/1	0.18	RECEPTACLE	b	10	20/2	1.3	GRILL ELEC
11	20/1	0.18	RECEPTACLE	c	12	|		
13	20/1	0.18	RECEPTACLE	a	14	20/2	1.3	GRILL ELEC
15	20/1	0.18	RECEPTACLE	b	16	|		
17	20/1	0.18	RECEPTACLE	c	18	20/1	0.54	L2 W CORR RECEPTACLE
19	20/1	0.72	W CRTYRD RECEPTACLE	a	20	20/1	0.9	L2 W CORR RECEPTACLE
21	20/1	0.36	C CRTYRD RECEPTACLE	b	22	20/1	0.54	L3 W CORR RECEPTACLE
23	20/1	1	POWERED DOOR	c	24	20/1	0.9	L3 W CORR RECEPTACLE
25	20/1	0.25	FA-RPS	a	26	20/1	0.54	L4 W CORR RECEPTACLE
27	20/1	0.25	FA-RPS	b	28	20/1	0.9	L4 W CORR RECEPTACLE
29	20/1	0.25	FA-RPS	c	30	20/1	0	SPARE
31	20/1	0	SPARE	a	32	20/1	0	SPARE
33	20/1	0	SPARE	b	34	20/1	0	SPARE
35	20/1	0	SPARE	c	36	20/1	0	SPARE
37	20/1	0	SPARE	a	38	20/1	0	SPARE
39	20/1	0	SPARE	b	40	20/1	0	SPARE
41	20/1	0	SPARE	c	42	20/1	0	SPARE

	CONN. KVA	CALC. KVA		CONN. KVA	CALC. KVA	
LIGHTING	0	0	(125%)	CONTINUOUS	0.75	0.938	(125%)
LARGEST MOTOR	0	1.25	(125%)	HEATING	0	0	(100%)
OTHER MOTORS	0	0	(100%)	NONCONTINUOUS	3.9	3.9	(100%)
RECEPTACLES	9.18	9.18	(50%>10)	KITCHEN EQUIP	0	0	(N/A)
METERBANK	0	0	(23%)	NONCOIN/DIVERSE	0	0	(N/A)
GST ROOMS	0	0	(50%)	TOTAL KVA	14.8	15.3	

BALANCED THREE PHASE AMPS 42.4

PHASE BALANCE PERCENT: PHASE A **101%** PHASE B **96.9%** PHASE C **103%**

P3A

Panel: P3A | Room: | Mounting: SURFACE | Fed from: HP | Note: SERVES LAUNDRY MOD | Volts: 208Y/120V 3P 4W | Bus Amps: 200 | Neutral: 100% | AIC: 22,000 | Main Bkr: MLO | Lugs: STANDARD

CKT #	CKT BKR	LOAD KVA	CIRCUIT DESCRIPTION		CKT #	CKT BKR	LOAD KVA	CIRCUIT DESCRIPTION
1	20/1	1.5	*GFCI BRKR* WASHER	a	2	20/1	0.18	RECEPTACLE
3	30/2	4.8	*GFCI BRKR* DRYER	b	4	20/1	0.2	FSD
5	|			c	6	20/1	1.5	*GFCI BRKR* WASHER
7	20/1	1.5	*GFCI BRKR* WASHER	a	8	30/2	4.8	*GFCI BRKR* DRYER
9	30/2	4.8	*GFCI BRKR* DRYER	b	10	|		
11	|			c	12	20/1	1.5	*GFCI BRKR* WASHER
13	20/1	1.5	*GFCI BRKR* WASHER	a	14	30/2	4.8	*GFCI BRKR* DRYER
15	30/2	4.8	*GFCI BRKR* DRYER	b	16	|		
17	|			c	18	20/1	1.5	*GFCI BRKR* WASHER
19	20/1	1.5	*GFCI BRKR* WASHER	a	20	30/2	4.8	*GFCI BRKR* DRYER
21	30/2	4.8	*GFCI BRKR* DRYER	b	22	|		
23	|			c	24	20/1	0.54	RECEPTACLE
25	20/1	1.5	*GFCI BRKR* WASHER	a	26	20/1	0.5	LAUNDRY CARD
27	30/2	4.8	*GFCI BRKR* DRYER	b	28	20/1	0.18	RECEPTACLE
29	|			c	30	20/1	0.54	RECEPTACLE
31	30/1	1.5	*GFCI BRKR* WASHER	a	32	20/1	0.5	LAUNDRY CARD

VOLTAGE DROP SCHEDULE

DEVICE	FEEDER			BRANCH CIRCUIT			TOTAL VOLTAGE DROP
	VOLTAGE DROP	WIRE SIZE	LENGTH	MAX VOLTAGE DROP	WIRE SIZE	LENGTH	
MDP-FP	0.06%	(3)#300kcmil	50'	1.83% (TAP 1)	#2/0	379'	1.88%
				MDP-FP-1: 1.83%	#2/0	379'	
HP	0.43%	(6)#600kcmil AL	21'	2.51% (CKT 2,4,6)	#4	216'	2.95%
ELEV-1				HP-1,3,5: 2.49%	#4	213'	
				HP-2,4,6: 2.51%	#4	216'	
EV PANEL	0.9%	(3)#400kcmil AL	46'	–	–	–	0.9%
				EV PANEL-1,3,5: 0%	#250kcmil AL	–	
				EV PANEL-7,9,11: 0%	#250kcmil AL	–	
				EV PANEL-2,4,6: 0%	#250kcmil AL	–	
				EV PANEL-8,10,12: 0%	#250kcmil AL	–	
EVP-3	2.09%	#250kcmil AL	149'	0.58% (CKT 41,43)	#8	131'	2.68%
				EVP-3-1,3: 0.21%	#8	48'	
				EVP-3-5,7: 0.22%	#8	48'	
				EVP-3-9,11: 0.22%	#8	49'	
				EVP-3-13,15: 0.31%	#8	70'	
				EVP-3-17,19: 0.32%	#8	71'	
				EVP-3-21,23: 0.32%	#8	71'	
				EVP-3-25,27: 0.32%	#8	72'	
				EVP-3-29,31: 0.33%	#8	73'	
				EVP-3-33,35: 0.33%	#8	74'	
				EVP-3-37,39: 0.45%	#8	101'	
				EVP-3-41,43: 0.58%	#8	131'	
				EVP-3-2,4: 0.45%	#8	102'	
				EVP-3-6,8: 0.46%	#8	103'	
				EVP-3-10,12: 0.46%	#8	103'	
				EVP-3-14,16: 0.47%	#8	104'	
				EVP-3-18,20: 0.47%	#8	105'	
				EVP-3-22,24: 0.56%	#8	126'	
				EVP-3-26,28: 0.57%	#8	127'	
				EVP-3-30,32: 0.57%	#8	128'	
				EVP-3-34,36: 0.58%	#8	129'	
				EVP-3-38,40: 0.58%	#8	130'	
EVP-6	1.17%	#250kcmil AL	143'	0.32% (CKT 6,8)	#8	72'	1.5%
				EVP-6-1,3: 0.12%	#8	27'	
				EVP-6-5,7: 0.12%	#8	27'	
				EVP-6-9,11: 0.25%	#8	56'	
				EVP-6-2,4: 0.25%	#8	57'	
				EVP-6-6,8: 0.32%	#8	72'	
L1A	0.67%	#1/0 AL	27'	***3.61% (CKT 27)***	#12	425'	4.28%
				L1A-7: 0.24%	#12	92'	
				L1A-9: 0.03%	#12	45'	
				L1A-11: 1.18%	#12	399'	
				L1A-13: 1.37%	#12	181'	
				L1A-15: 0.56%	#12	174'	
				L1A-17: 2.71%	#10	396'	
				L1A-19: 0.54%	#12	293'	
				L1A-21: 2.12%	#12	221'	
				L1A-23: 2.28%	#12	227'	
				L1A-25: 2.57%	#12	287'	
				L1A-27: 3.61%	#12	425'	
				L1A-29: 0.75%	#10	321'	
				L1A-31: 0.87%	#10	409'	
				L1A-2: 0.83%	#12	222'	
				L1A-4: 0.84%	#12	226'	
				L1A-6: 0.3%	#12	211'	
				L1A-8: 1.01%	#12	270'	
				L1A-10: 0.96%	#12	258'	
				L1A-12: 2.44%	#12	203'	
				L1A-14: 2.42%	#12	202'	
				L1A-16: 0.76%	#12	190'	
				L1A-18: 0.1%	#12	71'	
				L1A-20: 0.64%	#12	330'	
EM	0.84%	#4	24'	***4.09% (CKT 33)***	#12	413'	4.93%
				EM-1: 0.45%	#12	188'	
				EM-9: 0.22%	#12	170'	
				EM-11: 0.2%	#12	139'	
				EM-13: 0.2%	#12	220'	
				EM-15: 0.44%	#12	270'	
				EM-17: 0.97%	#12	232'	
				EM-19: 2.43%	#12	274'	
				EM-21: 1.37%	#12	292'	
				EM-23: 1.45%	#12	270'	
				EM-25: 3.74%	#12	388'	
				EM-27: 1.83%	#12	394'	
				EM-29: 3.88%	#12	402'	
				EM-31: 1.88%	#12	395'	
				EM-33: 4.09%	#12	413'	
				EM-35: 1.98%	#12	413'	
				EM-2: 0.89%	#12	251'	
				EM-4: 2.64%	#12	310'	
				EM-6: 1.65%	#12	325'	
				EM-8: 2.02%	#10	444'	
				EM-10: 2.8%	#12	423'	
				EM-12: 3.22%	#10	468'	
				EM-14: 0.55%	#12	157'	
				EM-20: 2.08%	#12	473'	
				EM-26: 2.37%	#12	480'	
				EM-28: 2.14%	#12	471'	
				EM-30: 2.43%	#12	490'	
				EM-32: 2.22%	#12	485'	
				EM-34: 2.39%	#12	498'	

COPYRIGHT 2023, EMERALD CITY ENGINEERS, INC.
KCLAYTON J:\2293-007 231 GRANT, PALO ALTO, CA\DWG\E504 VOLTAGE DROP SCHEDULE.DWG 03-17-2023 11:41

VOLTAGE DROP SCHEDULE (CONT.)

DEVICE	FEEDER			BRANCH CIRCUIT			TOTAL VOLTAGE DROP
	VOLTAGE DROP	WIRE SIZE	LENGTH	MAX VOLTAGE DROP	WIRE SIZE	LENGTH	
				EM-36: 2.27%	#12	492'	
M1A	0.96%	(2)#250kcmil AL	48'	***3.84% (CKT 31,33,35)***	#12	349'	4.8%
				M1A-1,3,5: 1.25%	#10	82'	
				M1A-7,9: 2.28%	#12	91'	
				M1A-11,13: 2.13%	#12	85'	
				M1A-15,17: 2.74%	#12	110'	
				M1A-19,21: 1.92%	#12	129'	
				M1A-23,25: 2.7%	#12	138'	
				M1A-27,29: 2.12%	#12	141'	
				M1A-31,33,35: 3.84%	#12	349'	
				M1A-37,39: 2.89%	#4	204'	
				M1A-2: 1.1%	#12	183'	
				M1A-4: 1.09%	#12	182'	
				M1A-6,8,10: 1.43%	#12	268'	
				M1A-12: 0.91%	#12	54'	
				M1A-14: 0.62%	#12	37'	
				M1A-16: 0.53%	#12	47'	
				M1A-18: 0.52%	#12	104'	
				M1A-20: 0.52%	#12	118'	
				M1A-22: 0.12%	#12	100'	
				M1A-24: 0.44%	#12	197'	
				M1A-26: 0.43%	#12	119'	
				M1A-28: 0.53%	#12	146'	
				M1A-30: 0.85%	#12	235'	
				M1A-32: 1.22%	#12	340'	
M1B	1.05%	(2)#250kcmil AL	13'	***3.52% (CKT 14)***	#12	211'	4.57%
				M1B-1,3: 2.35%	#12	120'	
				M1B-5,7: 2.35%	#8	187'	
				M1B-9,11: 3.12%	#10	207'	
				M1B-13,15: 2.65%	#10	160'	
				M1B-17,19: 2.52%	#10	152'	
				M1B-21,23: 2.13%	#6	173'	
				M1B-25,27: 1.47%	#4	126'	
				M1B-29,31: 2.18%	#2	231'	
				M1B-33,35: 1.67%	#4	143'	
				M1B-37: 0.17%	#12	156'	
				M1B-39: 0.2%	#12	174'	
				M1B-2: 2.17%	#10	127'	
				M1B-4: 2.35%	#10	138'	
				M1B-6: 0.2%	#12	83'	
				M1B-8: 0.48%	#12	201'	
				M1B-10: 0.1%	#12	80'	
				M1B-12: 0.24%	#12	198'	
				M1B-14: 3.52%	#12	211'	
				M1B-16: 0.5%	#12	218'	
				M1B-18: 0.4%	#12	168'	
				M1B-20: 1.32%	#12	249'	
				M1B-22: 2.5%	#10	247'	
				M1B-24: 0.32%	#12	267'	
				M1B-26: 2.54%	#10	251'	
				M1B-28: 0.6%	#12	249'	
				M1B-30: 0.51%	#12	211'	
				M1B-32: 0.25%	#12	210'	
				M1B-34: 0.3%	#12	252'	
				M1B-36: 2.61%	#10	258'	
				M1B-38: 1.68%	#12	150'	
				M1B-40: 0.34%	#12	140'	
				M1B-42: 2.17%	#12	130'	
M4A	0.76%	#250kcmil AL	167'	***3.07% (CKT 8)***	#12	109'	3.83%
				M4A-1,3,5: 0.58%	#12	170'	
				M4A-7,9,11: 0.37%	#12	108'	
				M4A-13,15,17: 0.68%	#12	197'	
				M4A-19,21,23: 1.04%	#12	301'	
				M4A-2,4,6: 0.16%	#12	57'	
				M4A-8: 3.07%	#12	109'	
				M4A-10: 0.15%	#12	63'	
				M4A-12: 0.44%	#12	192'	
				M4A-14: 0.15%	#12	61'	
				M4A-16: 0.47%	#12	213'	
				M4A-18: 0.18%	#12	74'	
				M4A-20: 0.46%	#12	203'	
				M4A-22: 2.07%	#12	194'	
				M4A-24: 1.95%	#12	183'	
				M4A-26: 1.83%	#12	173'	
P1A	0.55%	#250kcmil AL	25'	***3.67% (CKT 28)***	#12	163'	4.22%
				P1A-1,3,5: 0.88%	#12	88'	
				P1A-7: 0.48%	#12	56'	
				P1A-9: 0.15%	#12	34'	
				P1A-11: 0.38%	#12	33'	
				P1A-13: 0.48%	#12	39'	
				P1A-15: 0.55%	#12	43'	
				P1A-17: 0.21%	#12	49'	
				P1A-19: 0.54%	#12	76'	
				P1A-21: 0.32%	#12	75'	
				P1A-23: 0.39%	#12	90'	
				P1A-25: 0.51%	#12	119'	
				P1A-27: 0.57%	#12	132'	
				P1A-29: 1.6%	#12	165'	
				P1A-31: 0.67%	#12	28'	
				P1A-33: 0.66%	#12	30'	
				P1A-2: 3.41%	#12	109'	

VOLTAGE DROP SCHEDULE (CONT.)

DEVICE	FEEDER			BRANCH CIRCUIT			TOTAL VOLTAGE DROP
	VOLTAGE DROP	WIRE SIZE	LENGTH	MAX VOLTAGE DROP	WIRE SIZE	LENGTH	
				P1A-4: 0.28%	#12	116'	
				P1A-6: 0.29%	#12	120'	
				P1A-8: 0.3%	#12	124'	
				P1A-10: 3.26%	#12	113'	
				P1A-12: 3.12%	#12	108'	
				P1A-14: 0.5%	#12	117'	
				P1A-16: 0.97%	#12	112'	
				P1A-18: 0.95%	#12	110'	
				P1A-20: 2.3%	#12	106'	
				P1A-22: 1.09%	#12	55'	
				P1A-24: 1.25%	#12	170'	
				P1A-26: 1.81%	#12	160'	
				P1A-28: 3.67%	#12	163'	
				P1A-30: 1.19%	#12	175'	
				P1A-34: 0.27%	#12	62'	
				P1A-36: 3.47%	#12	155'	
P1B	1.83%	(2)#350kcmil AL	224'	2.65% (CKT 15)	#12	116'	4.49%
				P1B-1: 0.14%	#12	33'	
				P1B-3: 0.11%	#12	25'	
				P1B-5: 0.12%	#12	29'	
				P1B-7: 0.84%	#12	111'	
				P1B-9: 0.74%	#12	99'	
				P1B-11: 1.62%	#12	154'	
				P1B-13: 1.35%	#12	83'	
				P1B-15: 2.65%	#12	116'	
				P1B-17: 0.46%	#12	19'	
				P1B-19: 0.09%	#12	21'	
				P1B-21: 0.18%	#12	20'	
				P1B-23: 0.16%	#12	18'	
				P1B-25: 0.24%	#12	56'	
				P1B-27: 0.18%	#12	43'	
				P1B-2,4: 0.8%	#6	48'	
				P1B-6: 0.34%	#12	58'	
				P1B-8: 1.25%	#12	54'	
				P1B-10: 1.22%	#12	42'	
				P1B-12: 0.71%	#12	69'	
				P1B-14: 1.29%	#12	58'	
				P1B-16: 0.04%	#12	53'	
				P1B-18: 1.12%	#12	104'	
				P1B-20: 1.79%	#12	124'	
				P1B-22: 2.04%	#12	150'	
				P1B-24: 0.42%	#12	98'	
				P1B-26: 0.28%	#12	64'	
				P1B-28: 0.12%	#12	29'	
				P1B-30: 1.14%	#12	68'	
				P1B-32: 1.08%	#12	55'	
				P1B-34: 0.4%	#12	58'	
				P1B-36: 0.64%	#12	61'	
				P1B-38: 0.52%	#12	52'	
				P1B-40: 0.63%	#12	46'	
P1C	1.89%	(2)#350kcmil AL	14'	***3.02% (CKT 18)***	#12	141'	4.91%
				P1C-1,3,5: 2.14%	#2	225'	
				P1C-7,9,11: 1.97%	#12	208'	
				P1C-13: 1.42%	#12	88'	
				P1C-15: 2.6%	#12	124'	
				P1C-17: 2.54%	#12	105'	
				P1C-19: 1.79%	#12	107'	
				P1C-21: 1.03%	#12	119'	
				P1C-23: 0.93%	#12	225'	
				P1C-25: 1.03%	#12	247'	
				P1C-27: 2.66%	#12	232'	
				P1C-2,4,6: 2.23%	#10	231'	
				P1C-8,10,12: 1.83%	#10	162'	
				P1C-14: 1.86%	#12	111'	
				P1C-16: 2.45%	#12	141'	
				P1C-18: 3.02%	#12	141'	
				P1C-20: 2.08%	#12	122'	
				P1C-22: 0.7%	#12	81'	
				P1C-24: 0.93%	#12	214'	
				P1C-26: 1.3%	#12	64'	
				P1C-28: 2.32%	#12	107'	
				P1C-30: 2.18%	#12	101'	
P2A	0.79%	#250kcmil AL	108'	0.98% (CKT 26)	#12	76'	1.77%
				P2A-1: 0.09%	#12	22'	
				P2A-3: 0.33%	#12	30'	
				P2A-5: 0.45%	#12	37'	
				P2A-7: 0.64%	#12	48'	
				P2A-9: 0.12%	#12	29'	
				P2A-11: 0.15%	#12	35'	
				P2A-13: 0.17%	#12	40'	
				P2A-15: 0.17%	#12	40'	
				P2A-17: 0.12%	#12	28'	
				P2A-19: 0.97%	#12	56'	
				P2A-21: 0.97%	#12	113'	
				P2A-23: 0.94%	#12	49'	
				P2A-25: 0.12%	#12	20'	
				P2A-27: 0.16%	#12	27'	
				P2A-29: 0.23%	#12	38'	
				P2A-2: 0.74%	#12	171'	
				P2A-4: 0.61%	#12	97'	
				P2A-6,8: 0.62%	#12	59'	

VOLTAGE DROP SCHEDULE (CONT.)

DEVICE	FEEDER			BRANCH CIRCUIT			TOTAL VOLTAGE DROP
	VOLTAGE DROP	WIRE SIZE	LENGTH	MAX VOLTAGE DROP	WIRE SIZE	LENGTH	
				P2A-10,12: 0.75%	#12	72'	
				P2A-14,16: 0.91%	#12	87'	
				P2A-18: 0.75%	#12	58'	
				P2A-20: 0.32%	#12	15'	
				P2A-22: 0.84%	#12	65'	
				P2A-24: 0.46%	#12	21'	
				P2A-26: 0.98%	#12	76'	
				P2A-28: 0.96%	#12	44'	
P3A	1.64%	#500kcmil AL	146'	***3.24% (CKT 19)***	#12	90'	4.87%
				P3A-1: 2.2%	#10	101'	
				P3A-3,5: 2.39%	#10	103'	
				P3A-7: 2.29%	#10	105'	
				P3A-9,11: 2.49%	#10	107'	
				P3A-13: 2.38%	#10	109'	
				P3A-15,17: 2.59%	#10	112'	
				P3A-19: 3.24%	#12	90'	
				P3A-21,23: 2.15%	#10	92'	
				P3A-25: 2.06%	#10	94'	
				P3A-27,29: 2.24%	#10	97'	
				P3A-31: 2.15%	#10	99'	
				P3A-33,35: 2.34%	#10	101'	
				P3A-37: 0.47%	#12	97'	
				P3A-39: 0.41%	#12	85'	
				P3A-41: 0.34%	#12	152'	
				P3A-2: 0.42%	#12	97'	
				P3A-4: 0.51%	#12	107'	
				P3A-6: 2.43%	#10	122'	
				P3A-8,10: 2.65%	#10	114'	
				P3A-12: 2.53%	#10	116'	
				P3A-14,16: 2.75%	#10	118'	
				P3A-18: 2.63%	#10	121'	
				P3A-20,22: 2.85%	#10	123'	
				P3A-24: 1.42%	#12	126'	
				P3A-26: 1.25%	#12	104'	
				P3A-28: 0.37%	#12	86'	
				P3A-30: 1.28%	#12	115'	
				P3A-32: 1.12%	#12	93'	
				P3A-34: 0.32%	#12	75'	
				P3A-36: 1.13%	#12	103'	
				P3A-38: 0.99%	#12	82'	
				P3A-40: 0.31%	#12	141'	
				P3A-42: 0.28%	#12	130'	
P3B	0.97%	#250kcmil AL	249'	1.47% (CKT 10)	#12	68'	2.44%
				P3B-1: 0.41%	#12	35'	
				P3B-3: 0.27%	#12	27'	
				P3B-5: 0.42%	#12	36'	
				P3B-7: 0.11%	#12	26'	
				P3B-9: 0.11%	#12	25'	
				P3B-11: 0.07%	#12	16'	
				P3B-13: 0.06%	#12	15'	
				P3B-15: 0.11%	#12	25'	
				P3B-17: 0.11%	#12	36'	
				P3B-19: 0.19%	#12	54'	
				P3B-21: 0.35%	#12	92'	
				P3B-23: 1.38%	#12	67'	
				P3B-2: 0.38%	#12	87'	
				P3B-4: 0.32%	#12	74'	
				P3B-6: 0.41%	#12	95'	
				P3B-8: 0.64%	#12	149'	
				P3B-10: 1.47%	#12	68'	
				P3B-12: 0.25%	#12	67'	
				P3B-14: 0.29%	#12	78'	
				P3B-16: 0.15%	#12	25'	
				P3B-18: 0.09%	#12	25'	
				P3B-20: 0.15%	#12	36'	
STK1	0.55%	(2)#250kcmil AL	33'	1.96% (CKT 14,16,18)	#12	173'	2.51%
				STK1-1,3,5: 1.36%	#12	123'	
				STK1-7,9,11: 0.68%	#12	67'	
				STK1-13,15,17: 0.95%	#12	89'	
				STK1-2,4,6: 0.87%	#12	82'	
				STK1-8,10,12: 1.4%	#12	126'	
				STK1-14,16,18: 1.96%	#12	173'	
STK2	0.59%	(2)#250kcmil AL	19'	2.38% (CKT 7,9,11)	#10	338'	2.97%
				STK2-1,3,5: 1.78%	#10	255'	
				STK2-7,9,11: 2.38%	#10	338'	
				STK2-13,15,17: 2.23%	#10	316'	
				STK2-2,4,6: 1.82%	#10	260'	
				STK2-8,10,12: 1.42%	#10	205'	
W1A	0.7%	#250kcmil AL	46'	2.79% (CKT 2,4)	#6	219'	3.49%
				W1A-1,3: 2.31%	#8	116'	
				W1A-5,7: 2.53%	#8	127'	
				W1A-9,11: 2.75%	#8	138'	
				W1A-2,4: 2.79%	#6	219'	
				W1A-8: 1.17%	#12	43'	
XFMR 4	0.06%	#1/0 AL	42'	–	–	–	0.06%
HP-FLEX	1.18%	#250kcmil AL	291'	1.68% (CKT 2,4)	#8	133'	2.86%
				HP-FLEX-1: 0.86%	#12	34'	
				HP-FLEX-2,4: 1.68%	#8	133'	
				HP-FLEX-6,8: 0.24%	#4	17'	
				HP-FLEX-10: 0.07%	#12	28'	
				HP-FLEX-12: 0.08%	#12	31'	

VAN METER WILLIAMS POLLACK LLP
ARCHITECTURE | URBAN DESIGN ■ SAN FRANCISCO | DENVER | MINNEAPOLIS
333 Bryant Street, Suite 300, San Francisco, CA 94107 T 415.974.5352

CIVIL ENGINEER
BKF ENGINEERS
1730 N. FIRST ST SUITE 600
SAN JOSE, CA 95112

JOINT TRENCH / DRY UTILITIES
MILLENIUM DESIGN
PO BOX 737
ALAMO, CA 94507

LANDSCAPE ARCHITECT
PLURAL STUDIO
2742 17TH STREET
SAN FRANCISCO, CA 94110

STRUCTURAL ENGINEER
HOHBACH-LEWIN, INC
250 SHERIDAN AVE STE 100
PALO ALTO, CA 94306

MEP ENGINEER
EMERALD CITY ENGINEERS
21705 HIGHWAY 99
LYNWOOD, WA 98036

ENERGY CONSULTANT
REDWOOD ENERGY
1887 Q STREET
ARCATA, CA 95521

EMERALD CITY ENGINEERS, INC
21705 Highway 99
Lynnwood, WA 98036
TEL: 425-741-1200

REGISTERED PROFESSIONAL ENGINEER
ADAM C. FRENCH
E19421
EXP. 3-31-23
ELECTRICAL
STATE OF CALIFORNIA
03-20-23

COUNTY OF SANTA CLARA
BUILDING INSPECTION OFFICE
PLANS APPROVED FOR PERMIT
RECORD NO.: DEV22-1242
BY: rick.gomes Date: 07/28/2023
HARD COPY OF THESE STAMPED PLANS MUST BE ON THE SITE FOR INSPECTIONS

ID	DATE	NAME
1	11/11/2022	PERMIT CONVENTIONAL
A	12/16/2022	BID SET
B	03/20/2023	BID ADDENDUM
2	03/20/2023	PLAN CHECK RESPONSE 2

Project:

EDUCATOR HOUSING
231 GRANT AVENUE

231 GRANT AVENUE
PALO ALTO, CA 94306

Client:
mercy HOUSING
abode communities
MERCY HOUSING/
ABODE COMMUNITIES

VOLTAGE DROP SCHEDULES

JOB #: 2293-007
SCALE: AS NOTED

E5.04

PLAN CHECK RESPONSE 2 | DATE: 03/20/2023

SHEET NOTES:

1. PROVIDE 25' LOOP FOR ALL RG6 & CAT6 CABLING AT BACKBOARD.
2. AT MPOE AND IDF, PROVIDE 3/4" FIREPROOF PLYWOOD. 2 COATS FIRE RESISTANT GRAY PAINT
3. REFER TO DETAIL 1/E6.1 FOR MULTIMEDIA PANEL (SMART BOX) DETAILS.
4. PATCH PANELS FOR TERMINATING DATA CABLES. LEVITON CAT6 RATED OR EQUAL, 110-TYPE WITH CROSS CONNECT WIRING. CAPACITY FOR 10% SPARE.
5. GROUNDING: PROVIDE A 1/4" X 4" X 12" COPPER GROUND BUS BAR WITH (20) 1/4" PREDRILLED HOLES, MOUNTED TO BACKBOARD WITH 1" THICK RUBBER/PORCLAIN SPACERS. CONNECT WITH (1) #6 COPPER SOLID GROUND TO GROUNDING ELECTRODE SYSTEM. PROVIDE AT MPOE, ALL IDF'S, AND I.T. CLOSET.
6. COMMON AREA PHONE, DATA, TV CONNECTIONS TO ROUTE TO THE I.T. RACK OR NEAREST IDF (PROVIDE TRUNKLINE CABLING AS NECESSARY).
7. IDF: VENDORS TO ALTERNATE FLOORS, CONTRACTOR TO CONFIRM EXACT LAYOUTS.
8. WIFI: PROVIDE IN ALL TENANT AMENITY AREAS (INCLUDING COURTYARDS AND ROOFTOP DECKS). PROVIDE CAT6A CABLES TO EACH OUTLET TO SERVICE WIFI ACCESS POINTS. CABLES SHALL NOT EXCEED 100 METERS AND SHALL TERMINATE ON 110 STYLE PUNCH DOWN BLOCKS IN I.T. CLOSET OR IDF CLOSETS. PROVIDE NECESSARY INFRASTRUCTURE AND TRUNKLINE CABLING FOR A FULLY FUNCTIONAL SYSTEM.
8. I.T. CLOSET: PROVIDE 42RU RACK (MINIMUM), CONFIRM WITH OWNER REQUIREMENTS.
9. EMERGENCY PHONES: IF A FIBER SYSTEM IS USED AS THE EMERGENCY PHONE SYSTEM, PROVIDE UPS BACKUP POWER: APC SMX1500RM2U WITH EXTENDED BATTERY PACK: APC SMX48RMBP2U, RACK MOUNTED AT MPOE.

#FLAG NOTES:

1. (2) 4"C., (2) 2"C. EMT WITH TRUE-TAPE BETWEEN MPOE AND BOTTOM IDF CLOSET.
2. (4)4" SLEEVES BETWEEN IDFS (IF ROOMS DO NOT STACK, PROVIDE CONDUIT).
3. (2)3" CONDUITS TO I.T. CLOSET (CONFIRM LOCATION WITH OWNER). FOR PRICING, PROVIDE (2) RG6 COAX AND (6) CAT6 (OR FIBER).
4. CABLING FROM IDF TO MULTIMEDIA PANEL (SMART BOX):
   (1) MICRODUCT W/FIBER (AT&T)
   (1) MICRODUCT W/FIBER (COMCAST)
   (1) MICRODUCT SPARE
   (1) CAT6
   (1) COAX
5. ERRCS: PROVIDE (1) 2" CONDUIT FOR ERRCS, ROUTE 2-HR PROTECTED (IDF ROOM MAY BE 2-HR RATED FOR PROTECTION OF VERTICAL CABLE).

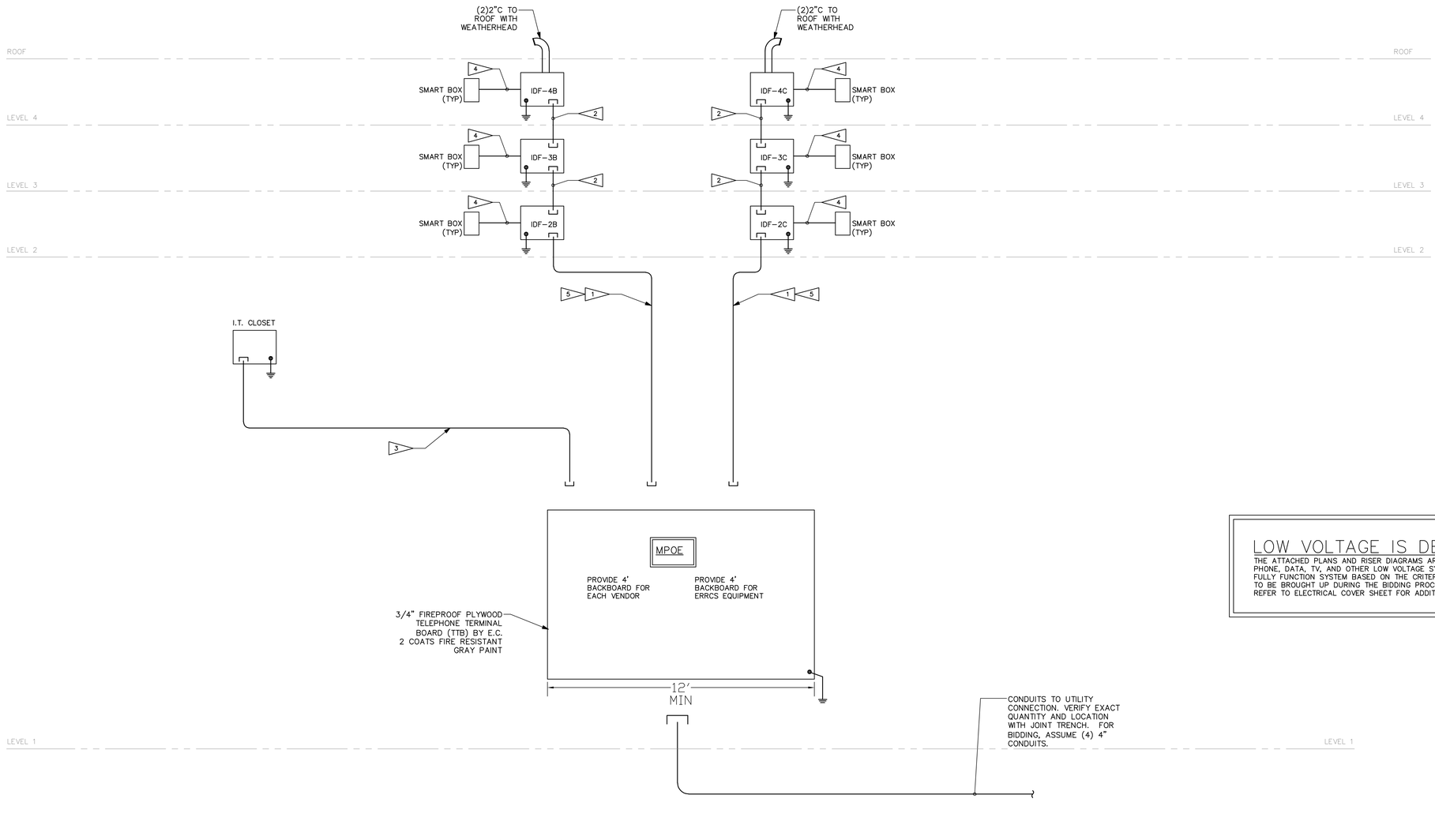

TEL/DATA/TV LOW VOLTAGE RISER DIAGRAM

SCALE: NONE

1 / E6.0

LOW VOLTAGE IS DESIGN/ASSIST.

THE ATTACHED PLANS AND RISER DIAGRAMS ARE TO PROVIDE GENERAL GUIDANCE FOR PHONE, DATA, TV, AND OTHER LOW VOLTAGE SYSTEMS. CONTRACTOR IS TO PROVIDE A FULLY FUNCTION SYSTEM BASED ON THE CRITERIA PROVIDED. ANY DISCREPANCIES ARE TO BE BROUGHT UP DURING THE BIDDING PROCESS.
REFER TO ELECTRICAL COVER SHEET FOR ADDITIONAL NOTES.

VAN METER WILLIAMS POLLACK LLP
ARCHITECTURE | URBAN DESIGN ■ SAN FRANCISCO | DENVER | MINNEAPOLIS
333 Bryant Street, Suite 300, San Francisco, CA 94107 T 415.974.5252

CIVIL ENGINEER
BKF ENGINEERS
1730 N. FIRST ST SUITE 600
SAN JOSE, CA 95112

JOINT TRENCH / DRY UTILITIES
MILLENIUM DESIGN
PO BOX 737
ALAMO, CA 94507

LANDSCAPE ARCHITECT
PLURAL STUDIO
2742 17TH STREET
SAN FRANCISCO, CA 94110

STRUCTURAL ENGINEER
HOHBACH-LEWIN, INC
250 SHERIDAN AVE STE 100
PALO ALTO, CA 94306

MEP ENGINEER
EMERALD CITY ENGINEERS
21705 HIGHWAY 99
LYNWOOD, WA 98036

ENERGY CONSULTANT
REDWOOD ENERGY
1887 Q STREET
ARCATA, CA 95521

EMERALD CITY ENGINEERS, INC
21705 Highway 99
Lynnwood, WA 98036
TEL: 425-741-1200

REGISTERED PROFESSIONAL ENGINEER ADAM C. FRESCH E-19424 EXP. 3-31-24 ELECTRICAL STATE OF CALIFORNIA

03-20-23

COUNTY OF SANTA CLARA
BUILDING INSPECTION OFFICE
PLANS APPROVED FOR PERMIT
RECORD NO.: DEV22-1242
BY: rick.gomes Date: 07/28/2023
HARD COPY OF THESE STAMPED PLANS MUST BE ON THE SITE FOR INSPECTIONS

ID	DATE	NAME
1	11/11/2022	PERMIT CONVENTIONAL
A	12/16/2022	BID SET
B	03/20/2023	BID ADDENDUM
2	03/20/2023	PLAN CHECK RESPONSE 2

Project:

EDUCATOR HOUSING
231 GRANT AVENUE

231 GRANT AVENUE
PALO ALTO, CA 94306

Client:
MERCY HOUSING/
ABODE COMMUNITIES

LOW VOLTAGE DIAGRAM

JOB #: 2293-007
SCALE: AS NOTED

E6.00

PLAN CHECK RESPONSE 2 | DATE: 03/20/2023

COPYRIGHT 2023, EMERALD CITY ENGINEERS, INC.

K:\LAYTON J:\2293-007 231 GRANT, PALO ALTO, CA\DWG\E600 LOW VOLTAGE DIAGRAM.DWG 03-17-2023 11:41

LOW VOLTAGE SERVICES									
Phone and Internet Service (FIBER)	**Joint Trench Designer**	**JT Contractor**	**Phone Company**	**Cable Company**	**Low Voltage Contractor**	**Electrical Contractor**	**Electrical Engineer**	**General Contractor**	**Owner**
Telephone Design from Street to MPOE	X	X							
Telephone / Data Design in Building							X		
Telephone Conduit in JT		X							
Telephone (Cable Construction) from Street to MPOE	X		X						
Telephone and Data (Cabling) from MPOE to IDF Rooms, installing Fiber			X						
Telephone / Data (Conduit) from MPOE to IDF Rooms						X	X		
Make up Blocks and Punch Down in IDF Rooms					X				
Telephone / Data (Fiber Cabling) from IDF to Smart Box in Units, provided by AT&T, installed by Low voltage contractor			X		X				
Telephone / Data Cabling (Punch Down) in Smart Box					X				
Telephone / Data (Cabling) from Smart Box to Wall Plates					X				
Provide Wall Plates					X				
Note: Allow (2) weeks to schedule AT&T for Fiber Install					X				

Cable TV and Internet Service (FIBER)	**Joint Trench Designer**	**JT Contractor**	**Phone Company**	**Cable Company**	**Low Voltage Contractor**	**Electrical Contractor**	**Electrical Engineer**	**General Contractor**	**Owner**
Cable / Internet Design to MPOE	X								
Cable / Internet Design in Building					X		X		
Cable / Internet Conduit in JT		X							
Cable / Internet (Cable) to MPOE				X					
Cable / Internet from MPOE to IDF Rooms (Fiber)				X					
Cable / Internet (Conduit) from MPOE to IDF Rooms						X			
Make up Connect to Unit Wiring in IDF Rooms (Fiber)				X					
Cable / Internet Fiber & Microduct, provided by Cable Company, including Make Up				X					
Cable / Internet Installation of Microduct from IDF to Smart Box in Units					X				
Cable / Internet from Smart Box to Wall Plates (Punch down)					X				
Provide Wall Plates					X				

Satellite Service	**Joint Trench Designer**	**JT Contractor**	**Phone Company**	**Cable Company**	**Low Voltage Contractor**	**Electrical Contractor**	**Electrical Engineer**	**General Contractor**	**Owner**
Satellite Design					X		X		
Satellite Hardware / Dishes									
Conduit from Roof to IDF Rooms						X			
Service from Dish to IDF Rooms (FUTURE)									
Make up (Patch Panel) and Connect to Unit Wiring in IDF Rooms					X				
Satellite Cable from IDF to Smart Box in Units and box make-up					X				
Make Up Satellite Cabling in Smart Box					X				
Satellite Cable from Smart Box to Wall Plates					X				
Provide Wall Plates					X				

Digital TV Antenna (Service)	**Joint Trench Designer**	**JT Contractor**	**Phone Company**	**Cable Company**	**Low Voltage Contractor**	**Electrical Contractor**	**Electrical Engineer**	**General Contractor**	**Owner**
Conduit from Roof to IDF Room						X			
Cabling From Roof to IDF Room					X				
Cabling from IDF to Unit (Use Satellite Cable if requested)					X				
Make Up Cabling in Smart Box (Use Satellite Cable if requested)					X				
Cabling from Smart box to Wall Jack (Use Satellite Cable if requested)					X				X

Close Circuit TV (Security Camera System)	**Joint Trench Designer**	**JT Contractor**	**Phone Company**	**Cable Company**	**Low Voltage Contractor**	**Electrical Contractor**	**Electrical Engineer**	**General Contractor**	**Owner**
CCTV Design-Scope (location of devices per plans, specs for system type)							X		
CCTV Hardware / Cameras / Recording Devices/ TV Monitor in managers office (including system selection)					X				
Conduit from Recording Devices to Cameras						X			
Software / Set Up and Training					X				
Review by Property Management/Facilities (for Location)									X

Door Access Systems	**Joint Trench Designer**	**JT Contractor**	**Phone Company**	**Cable Company**	**Low Voltage Contractor**	**Electrical Contractor**	**Electrical Engineer**	**General Contractor**	**Owner**
Door Access System Design (location on electrical plans, refer to specs for system design, must include software for remote management)							X		
Card Swipe and Key Pad Hardware					X				
120v Power and Conduit						X			
Low Voltage Wiring (to all devices, no line voltage remote devices allowed)					X				
Strike and Door Hardware / Including Gates (per door hardware schedule)								X	
Recording and Keying Equipment (including software for remote access)								X	
Cat6 cabling to Recording Equipment					X				
Power Assisted Doors								X	
Guest Entry Telephone Callbox System					X				
Review by Property Management/Facilities (prior to bidding)									X
Garage Door								X	

Fire Alarm	**Joint Trench Designer**	**JT Contractor**	**Phone Company**	**Cable Company**	**Low Voltage Contractor**	**Electrical Contractor**	**Electrical Engineer**	**General Contractor**	**Owner**
Fire Alarm Design Criteria							X		
Site Conduit for Tamper and Flow Switches						X			
Fire Alarm Design					X				
Fire Alarm Panels, Bells and Wiring					X				
Conduit and Raceways for Wiring (if required by code)						X			
Phone Service where needed					X				
Make Up of Wiring					X				

Intrusion Detection	**Joint Trench Designer**	**JT Contractor**	**Phone Company**	**Cable Company**	**Low Voltage Contractor**	**Electrical Contractor**	**Electrical Engineer**	**General Contractor**	**Owner**
Burglar Alarm Design Criteria (Coordinate Conduit and Power)							X		
Conduit for Wiring						X			
Burglar Alarm Design					X				
Burglar Alarm, Smarts and Parts					X				
Phone Service where needed					X				
Make Up of Wiring					X				
Review by Property Management/Facilities (prior to bidding)									

Other	**Joint Trench Designer**	**JT Contractor**	**Phone Company**	**Cable Company**	**Low Voltage Contractor**	**Electrical Contractor**	**Electrical Engineer**	**General Contractor**	**Owner**
Fire Proof 3/4" Plywood Backboard (4'X8' in MPOE, 4'x4' in IDF for each provider)								X	
Power for all components						X			
Design of IDF Room							X		
30" minimum Smart Box or equal, including Power						X	X		
Conduit for Irrigation Control Wiring (under Podium Deck)						X			
Power Doors								X	
Contractor Applied / Owner Pays for Permits								X	X

Owner IT System	**Joint Trench Designer**	**JT Contractor**	**Phone Company**	**Cable Company**	**Low Voltage Contractor**	**Electrical Contractor**	**Electrical Engineer**	**General Contractor**	**Owner**
19" metal I.T. Rack with 3 compartments (coordinate with owner)					X				
Data Patch Panels (coordinate with owner)					X				
Make up (Patch Panels) Connect to phone/data/TV wiring in I.T. closet					X				
120v receptacle outlets (quantity per plans, located on rack)						X			
(12) CAT6 cables (or Fiber trunkline) with RJ45 jacks from MPOE terminated on I.T. Rack					X				
(2) RG6 Coax cables from MPOE terminated on I.T. Rack					X				
Tenant WIFI Equipment Selection (locations per electrical plans, Owner to send to vendors for design)					X				
Tenant WIFI Headend Equipment (located in I.T. closet)					X				
Tenant WIFI Cat6 cabling to headend equipment					X				
Tenant WIFI Cat6 cabling to remote devices (located in all Public Amenity Spaces)					X				
12" x 12" Access Panels for WIFI remote devices (if hardlid)					X				

LOW VOLTAGE COORDINATION MATRIX 3

SCALE: NONE

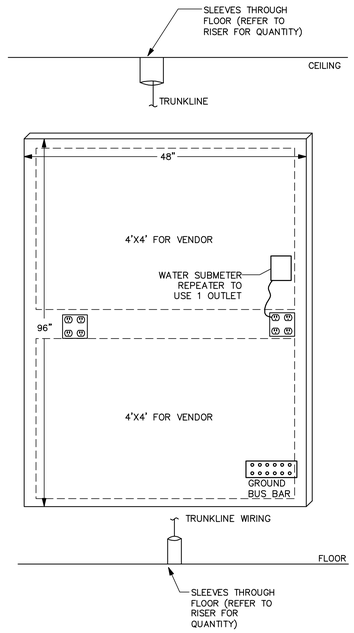

SHEET NOTES

1. ALL EQUIPMENT TO BE MOUNTED TO BACKBOARD. MARK EACH BACKBOARD WITH VENDOR SPACE PRIOR TO UTILITY COMPANIES INSTALLATION.

TYPICAL IDF LAYOUT 2

SCALE: NONE

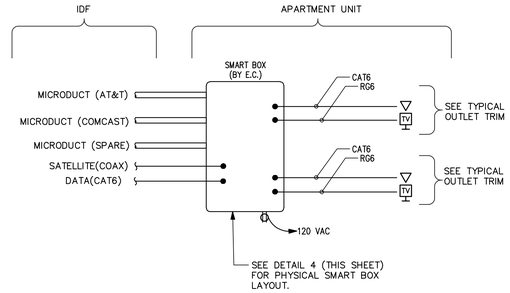

SMART BOX AND CABLING DIAGRAM

NOTES:

1. PROVIDE THE SMART BOX WITH THE SURGE J-BOX KIT AND ONE DUPLEX RECEPTACLE.
2. COORDINATE WITH THE SATELLITE, CABLE TV AND TELEPHONE/DATA PROVIDERS INSTALLATION AND TERMINATION OF CABLING AND DEVICES. SYSTEM SHALL BE INSTALLED COMPLETE AND OPERATIONAL.
3. PROVIDE THE "SMART BOX" STRUCTURED MEDIA ENCLOSURE WITH BUILT-IN TERMINATION BOARDS FOR ALL DEVICES (TV, PHONE, DATA).
4. CABLE TV, PROVIDE BLACK COAX CABLE. SATELLITE TV, PROVIDE WHITE COAX CABLE.
5. INDIVIDUAL CABLE TO EACH DEVICE FROM SMART BOX, NO DAISY CHAINING.
6. ALL PHONE, DATA, AND TV WIRING BY CONTRACTOR.

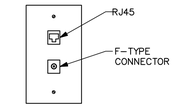

TYP OUTLET TRIM

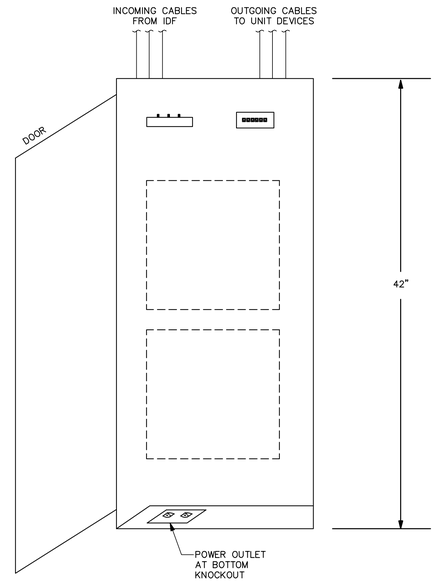

EQUIPMENT LIST:

LEGRAND ENP4250 – 42" MEDIA DISTRIBUTION ENCLOSURE (PLASTIC WITH HINGED DOOR)

-FIBER TRANSITION OUTLET (FTO)
-UNIVERSAL MOUNTING PLATE (UMP)
-HURRICAN CLIP (FIBER MANAGEMENT CLIP)
-DATA/VOICE MODULE (8-PORT CAT6)
-VOICE MODULE (8-PORT VOICE WITH RJ31X)
-SC/APC JACK (FIBER KEYSTONE W/SHUTTER)
-INTEGRAL DUPLEX POWER 120V OUTLET.

SHEET NOTES

CONTRACTOR TO PROVIDE THE FOLLOWING:
- TERMINATION OF CABLE WITHIN SMART BOX (INCLUDING MAKE UP)
- CABLING FROM SMART BOX TO DEVICE
- WALL PLATE WITH PORT
- PROVIDE #10 CU GROUND WIRE FROM THE GROUND LUG IN THE RECEPTACLE, TERMINATED AT THE DUPLEX BOX FOR THE FIBER TERMINATION. LEAVE WITH 3' OF GROUND WIRE.

APARTMENT UNIT

SMART BOX LAYOUT 1

SCALE: NONE

VAN METER WILLIAMS POLLACK LLP
ARCHITECTURE | URBAN DESIGN ■ SAN FRANCISCO | DENVER | MINNEAPOLIS
333 Bryant Street, Suite 300, San Francisco, CA 94107 T 415.974.5252

CIVIL ENGINEER
BKF ENGINEERS
1730 N. FIRST ST SUITE 600
SAN JOSE, CA 95112

JOINT TRENCH / DRY UTILITIES
MILLENIUM DESIGN
PO BOX 737
ALAMO, CA 94507

LANDSCAPE ARCHITECT
PLURAL STUDIO
2742 17TH STREET
SAN FRANCISCO, CA 94110

STRUCTURAL ENGINEER
HOHBACH-LEWIN, INC
250 SHERIDAN AVE STE 100
PALO ALTO, CA 94306

MEP ENGINEER
EMERALD CITY ENGINEERS
21705 HIGHWAY 99
LYNWOOD, WA 98036

ENERGY CONSULTANT
REDWOOD ENERGY
1887 Q STREET
ARCATA, CA 95521

EMERALD CITY ENGINEERS, INC
21705 Highway 99
Lynnwood, WA 98036
TEL: 425-741-1200

REGISTERED PROFESSIONAL ENGINEER ADAM C. FRENCH EXP. 3-31-24 ELECTRICAL STATE OF CALIFORNIA

03-20-23

COUNTY OF SANTA CLARA
BUILDING INSPECTION OFFICE
PLANS APPROVED FOR PERMIT
RECORD NO.: DEV22-1242
BY: rick.gomes Date: 07/28/2023
HARD COPY OF THESE STAMPED PLANS MUST BE ON THE SITE FOR INSPECTIONS

ID	DATE	NAME
1	11/11/2022	PERMIT CONVENTIONAL
A	12/16/2022	BID SET
B	03/20/2023	BID ADDENDUM
2	03/20/2023	PLAN CHECK RESPONSE 2

Project:

EDUCATOR HOUSING
231 GRANT AVENUE

231 GRANT AVENUE
PALO ALTO, CA 94306

Client:
MERCY HOUSING/
ABODE COMMUNITIES

LOW VOLTAGE DETAILS

JOB #: 2293-007
SCALE: AS NOTED

E6.01

PLAN CHECK RESPONSE 2 | DATE: 03/20/2023

COPYRIGHT 2023, EMERALD CITY ENGINEERS, INC.

K:\LAYTON J\2293-007 231 GRANT, PALO ALTO, CA\DWG\E601 LOW VOLTAGE DETAILS.DWG 03-17-2023 11:41

COORDINATION MATRIX

	Item	Furnished By	Installed By	Power Wiring By	Control Wiring By	Testing & Balancing By
MECHANICAL & PLUMBING						
	Equipment Motors	M	M	E	M	M
	Magnetic Motor Starters, automatically controlled with or without HOA switches	E	E	E	M	M
	Magnetic Motor Starters, manually controlled	E	E	E	NA	M
	Magnetic Motor Starters, furnished with mechanical equipment, factory mounted	M	M	E	M	M
	Sail switches if required for positive air flow annunciation	NA	NA	NA	NA	NA
	Variable Frequency Drives	M	M	E	M	M
	Disconnect switches and 120-volt recepts	E	E	E	--	--
	Disconnect switches, manual motor starters, thermal overload switches	E	E	E	NA	E
	MECH Controls, valves, float controls, damper motors, low voltage tstats, other misc.	M	M	E	M	M
	MECH Controls, line voltage T-stats	E	E	E	E	M
	Environmental Control Systems	M	M	E	M	M
	Electric Cabinet Heaters, unit heaters	E	E	E	E	E
	Electric duct heating coils	M	M	E	M	M
	Duplex Sump Controller & Starters	M	E	E	E	M
	Heat Trace	E	E	E	E	M
	Solenoid Valves	P	P	E	E	P
	Commercial Kitchen hood shunt trip	E	E	E	E	E
OTHER						
	Light pole concrete bases	E	E	N/A	N/A	N/A
	Housekeeping concrete pads	GC	GC	N/A	N/A	N/A
	Irrigation controller	GC	E	N/A	GC	GC
	Motorized doors	GC	GC	E	GC	GC
GENERATOR						
	Electric generator	E	E	E	E	E
	Electric Generator, Remote Fill Station	M	M	E	E	M
	Electric Generator, Remote Fill Station Piping	M	M	NA	NA	M
	Electric Generator, Remote Fill Station Controls	E	M	E	E	E
FIRE ALARM / FIRE PUMP						
	Smoke Fire Dampers	M	M	E	FA	M
	Fire, flow switches, tamper switches	S	S	E	FA	M
	Fire Pump & Transfer Switch	S	S	E	E	S
	Duct Smoke Detectors	M	M	E	FA	FA
ELEVATOR						
	Elevator Sump & Controller	M	M	E	M	M
	Heat & smoke detectors in hoistway and elev room (if required)	FA	FA	N/A	FA	FA
	Elevator Shunt Trip	E	E	E	FA	E

Mechanical Contractor	M
Electrical Contractor	E
Plumbing Contractor	P
Sprinkler Contractor	S
Fire Alarm Contractor	FA
General Contractor	GC

ELECTRICAL TO PROVIDE FUSES PER MANUFACTURER SPECIFICATIONS FOR ALL EQUIPMENT.

COORDINATION MATRIX

SCALE: NONE

3

NOTE: NOT ALL ITEMS APPLY TO THIS PROJECT

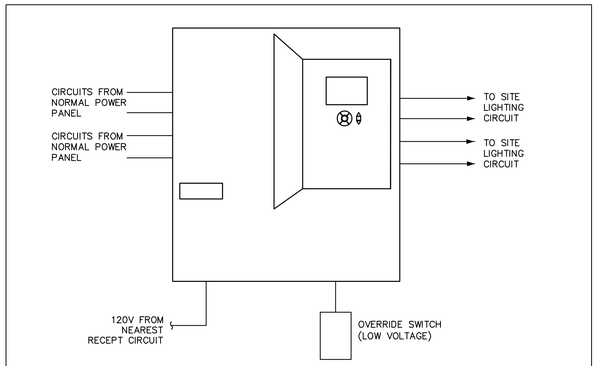

PROVIDE ONE PEANUT PANEL PER SERVICE.

LIGHTING CONTROL PANEL WITH ASTRONIMICAL TIME CLOCK TO SHUT OFF EXTERIOR LIGHTING, WITH OVERRIDE SWITCH FOR MAINTENANCE.

CONTROL DEVICES

WATTSTOPPER LP8S-G-115/277 WITH EM24A2

NOTES:

1. LIGHTING CONTROL SHALL BE IN A SINGLE ENCLOSURE.
2. CONTROL WIRING SHALL BE IN CONDUIT, 1/2"C (MIN).
3. SET TIMING SCHEDULE WITH OWNER FOR DIFFERENT ZONES (POOL DECK, COURTYARD, LANDSCAPING, BUILDING EXTERIOR)
4. IF MULTIPLE TIMECLOCKS, THEY ARE TO BE SYNCED TO TURN ON/OFF SIMULTANEOUSLY.
5. PROVIDE SEPARATE CONTROLS FOR EMERGENCY LIGHTING.

EXTERIOR LIGHTING DIAGRAM (TYP)

SCALE: NONE

2

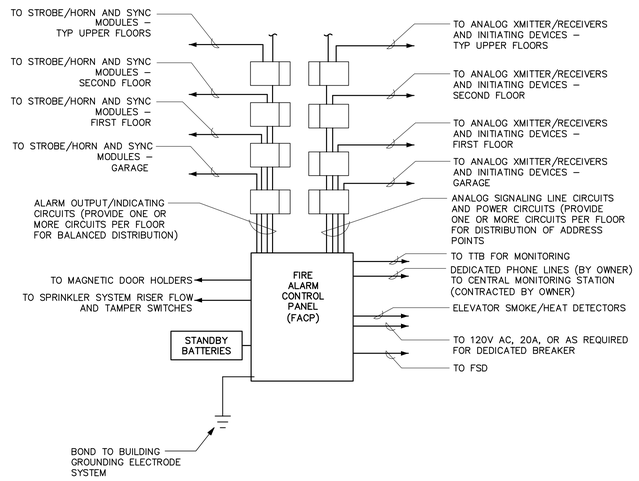

FIRE ALARM SYSTEM NOTES:

SIGNAL INDICATING DEVICES SHALL COMPLY WITH ADA/NFPA 72/ANSI 117.1 CODES AND STANDARDS. INSTALLATION OF DEVICES SHALL CONFORM TO THE FOLLOWING REQUIREMENTS.

A. AUDIBLE SIGNALS SHALL BE CAPABLE OF BEING SILENCED WHILE VISUAL SIGNALS CONTINUE TO FLASH.

B. FIRE ALARM SYSTEM: PROVIDE TAMPER SWITCHES AND CONNECT TO FIRE ALARM CONTROL PANEL.

C. VISUAL SIGNALS SHALL BE SYNCHRONIZED WHEN MULTIPLE DEVICES ARE IN THE SAME FIELD OF VIEW.

D. APARTMENT UNIT SMOKE DETECTORS ARE NOT APART OF THE BUILDING FA SYSTEM.

E. APARTMENT UNIT SMOKE DETECTORS WHEN ACTUATED SHALL SOUND A LOCAL ALARM ONLY. APARTMENT UNIT SMOKE DETECTORS SHALL NOT CAUSE BUILDING GENERAL ALARM OR CAUSE OTHER APARTMENT UNIT DETECTORS TO SOUND.

F. IN ACCESSIBLE AND HEARING-IMPAIRED UNITS ONLY, PROVIDE BOTH FIRE ALARM HORN & STROBE DEVICES PER PLANS.

G. IF TENANT UNIT IS EQUIPPED WITH MORE THAN ONE SMOKE DETECTOR, AN ALARM FROM ONE DETECTOR SHALL CAUSE ALL OTHER DETECTORS TO SOUND AN ALARM WITHIN THE SAME TENANT UNIT. ALL ACCESSIBLE AND HEARING IMPAIRED ROOM STROBE/HORNS SHALL ALSO BE ACTIVATED WITHIN THAT UNIT.

H. PROVIDE VISUAL DEVICES IN HEARING-IMPAIRED UNITS IN ADDITION TO ADA ROOMS. VERIFY LOCATIONS WITH ARCHITECT.

I. ALL FIRE ALARM WIRING SYSTEM TO BE INSTALLED IN CONDUIT IF REQUIRED BY THE CITY.

J. ALL WORK SHALL BE PERFORMED PER CODE.

K. FIRE ALARM SYSTEM SHALL CONFORM TO CODE.

FIRE ALARM RISER DIAGRAM

SCALE: NONE

1

COUNTY OF SANTA CLARA
BUILDING INSPECTION OFFICE
PLANS APPROVED FOR PERMIT
RECORD NO.: DEV22-1242
BY: rick.gomes Date: 07/28/2023
HARD COPY OF THESE STAMPED PLANS MUST BE ON THIS SITE FOR INSPECTIONS

FIRE ALARM SYSTEM RISER:
FIRE ALARM SYSTEM SHOWN ON PLANS IS SCHEMATIC ONLY. FIRE ALARM SYSTEM DESIGN IS A DEFERRED APPROVAL PROCESS WITH LOCAL FIRE DEPARTMENT. CONTRACTOR SHALL BE RESPONSIBLE FOR SELECTION AND LAYOUT OF DEVICES AS PART OF THEIR DESIGN SUBMITTAL PROCESS.

NOTE: THIS DRAWING IS DIAGRAMMATIC AND TYPICAL, AND IS NOT INTENDED TO SHOW ALL CIRCUITS AND DEVICES THAT MAY BE REQUIRED.

FULL SYSTEM IS DESIGN/BUILD

VAN METER WILLIAMS POLLACK LLP
ARCHITECTURE | URBAN DESIGN ■ SAN FRANCISCO | DENVER | MINNEAPOLIS
333 Bryant Street, Suite 300, San Francisco, CA 94107 T 415.974.5252

CIVIL ENGINEER
BKF ENGINEERS
1730 N. FIRST ST SUITE 600
SAN JOSE, CA 95112

JOINT TRENCH / DRY UTILITIES
MILLENIUM DESIGN
PO BOX 737
ALAMO, CA 94507

LANDSCAPE ARCHITECT
PLURAL STUDIO
2742 17TH STREET
SAN FRANCISCO, CA 94110

STRUCTURAL ENGINEER
HOHBACH-LEWIN, INC
250 SHERIDAN AVE STE 100
PALO ALTO, CA 94306

MEP ENGINEER
EMERALD CITY ENGINEERS
21705 HIGHWAY 99
LYNWOOD, WA 98036

ENERGY CONSULTANT
REDWOOD ENERGY
1887 Q STREET
ARCATA, CA 95521

EMERALD CITY ENGINEERS, INC
21705 Highway 99
Lynnwood, WA 98036
TEL: 425-741-1200

REGISTERED PROFESSIONAL ENGINEER ADAM C. FRENCH E-19421 EXP. 3-31-24 ELECTRICAL STATE OF CALIFORNIA
03-20-23

ID	DATE	NAME
1	11/11/2022	PERMIT CONVENTIONAL
A	12/16/2022	BID SET
B	03/20/2023	BID ADDENDUM
2	03/20/2023	PLAN CHECK RESPONSE 2

Project:

EDUCATOR HOUSING
231 GRANT AVENUE

231 GRANT AVENUE
PALO ALTO, CA 94306

Client:

MERCY HOUSING/
ABODE COMMUNITIES

DETAILS AND DIAGRAMS

JOB #: 2293-007
SCALE: AS NOTED

E6.02

PLAN CHECK RESPONSE 2 | DATE: 03/20/2023

COPYRIGHT 2023, EMERALD CITY ENGINEERS, INC.
XCLAYTON: J:\2293-007 231 GRANT, PALO ALTO, CA\DWG\E602 DETAILS AND DIAGRAMS.DWG 03-17-2023 11:41

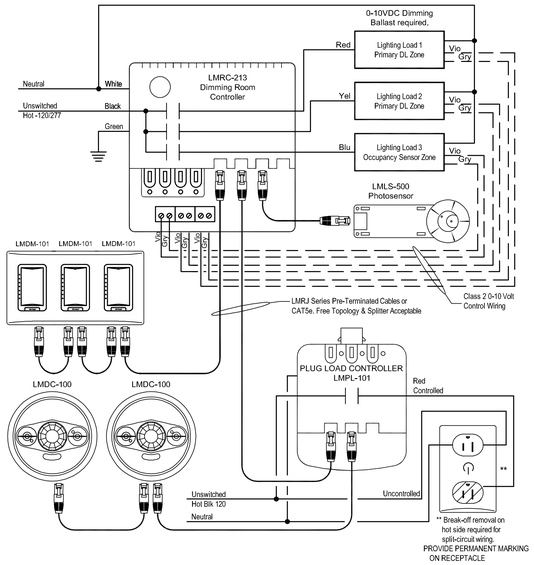

PROVIDE INTEGRATED LIGHTING AND POWER ROOM CONTROL SYSTEM. PROVIDE IN ALL ROOMS REQURING OCCUPANCY SENSOR, DAYLIGHT HARVESTING, DIMMING, AND/OR CONTROLLED RECEPTACLES. WATTSTOPPER DIGITAL LIGHTING MANAGEMENT SYSTEM OR EQUAL.

DETAIL IS DIAGRAMMATIC. PROVIDE ALL COMPONENTS FOR A FULLY FUNCTIONAL SYSTEM. CONTROLLERS TO BE LOCATED IN A JBOX THAT IS IN AN INCONSPICUOUS LOCATION AND ACCESSIBLE, EXACT LOCATION DETERMINED IN THE FIELD.

ENCLOSED ROOM & CORRIDOR LIGHTING & PLUG CONTROLS

WIRING DIAGRAM

SCALE: NONE

1

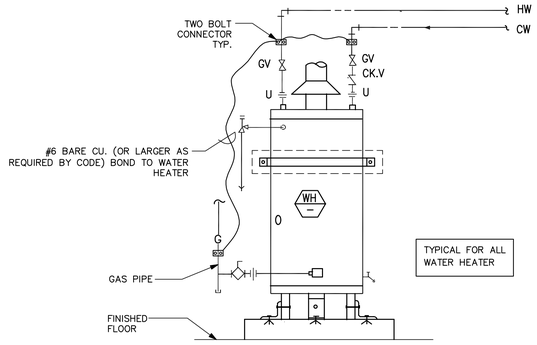

TYPICAL FOR ALL WATER HEATER

WATER HEATING GROUNDING

DETAIL

SCALE: NONE

2

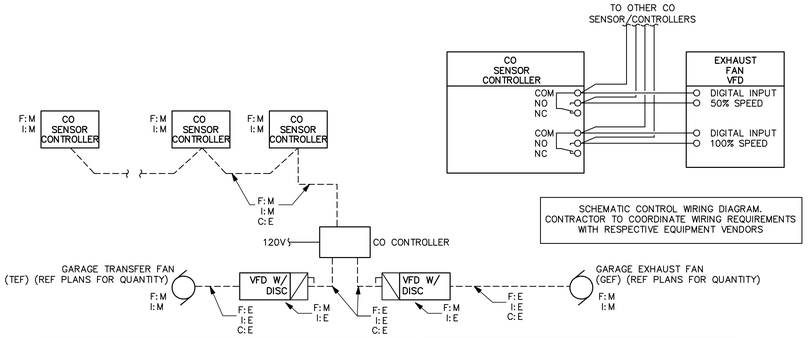

SCHEMATIC CONTROL WIRING DIAGRAM. CONTRACTOR TO COORDINATE WIRING REQUIREMENTS WITH RESPECTIVE EQUIPMENT VENDORS

NOTES:

1. WIRING DIAGRAM FOR GARAGE EXHAUST FANS. CONTRACTORS TO COORDINATE ALL REQUIRED WORK. DETAIL IS DIAGRAMMATIC AND WILL NEED TO BE CONFIRMED WITH THE MANUFACTURER'S SHOP DRAWING PROVIDED BY THE MECHANICAL CONTRACTOR.
2. ELECTRICAL CONTRACTOR SHALL PROVIDE CONDUIT FOR CO SYSTEM. ROUTE CONDUIT WITHIN CONCRETE SLAB WHERE POSSIBLE. CONFIRM ALL LOCATION AND CONDUIT PATHWAY WITH MECHANICAL.
3. REFER TO MECHANICAL PLANS FOR SEQUENCE OF OPERATION FOR FANS + PPM SETTINGS
4. REFER TO MECHANICAL PLANS FOR CO SENSOR/CONTROLLER LOCATIONS.
5. SYSTEM TO MEET THE REQUIREMENTS OF CMC 403.7.2 EXCEPTION 2. SYSTEM IS TO NOT HAVE ANY STROBES OR HORNS AS THIS IS NOT A CBC 915 CARBON MONOXIDE DETECTION SYSTEM (GARAGE IS EXEMPT), NO INTERCONNECTION TO FACP IS REQUIRED BY CODE.

LEGEND			
F: _	FURNISHED BY	E	ELECTRICAL CONTRACTOR
I: _	INSTALLED BY	M	MECHANICAL CONTRACTOR
C: _	CONDUIT BY	FA	FIRE ALARM CONTRACTOR
		- - - - -	CONTROL WIRING

CARBON MONOXIDE (CO) SENSOR CONTROLLER

PROVIDE COMBINATION CO SENSOR & CONTROLLER WITH LOW AND HIGH ADJUSTABLE ALARM POINT RELAYS.
- 120VAC POWER SOURCE.
- DRY CONTACT ALARM RELAYS RATED FOR 5A @ 120V
- ADJUSTABLE TIME DELAYS AND ACTIVATION SETPOINTS
- ELECTROCHEMICAL CO SENSOR MOUNTED ON DEVICE
- PROVIDE AIRTEST TECHNOLOGIES #CT-1000 OR EQUIVALENT
- SET TIME DELAY TO 4 MINUTES

GARAGE EXHAUST FAN WIRING DIAGRAM

DETAIL

SCALE: NONE

3

VAN METER WILLIAMS POLLACK LLP
ARCHITECTURE | URBAN DESIGN ■ SAN FRANCISCO | DENVER | MINNEAPOLIS
333 Bryant Street, Suite 300, San Francisco, CA 94107 T 415.974.5252

CIVIL ENGINEER
BKF ENGINEERS
1730 N. FIRST ST SUITE 600
SAN JOSE, CA 95112

JOINT TRENCH / DRY UTILITIES
MILLENIUM DESIGN
PO BOX 737
ALAMO, CA 94507

LANDSCAPE ARCHITECT
PLURAL STUDIO
2742 17TH STREET
SAN FRANCISCO, CA 94110

STRUCTURAL ENGINEER
HOHBACH-LEWIN, INC
250 SHERIDAN AVE STE 100
PALO ALTO, CA 94306

MEP ENGINEER
EMERALD CITY ENGINEERS
21705 HIGHWAY 99
LYNNWOOD, WA 98036

ENERGY CONSULTANT
REDWOOD ENERGY
1887 G STREET
ARCATA, CA 95521

EMERALD CITY ENGINEERS, INC
21705 Highway 99
Lynnwood, WA 98036
TEL: 425-741-1200

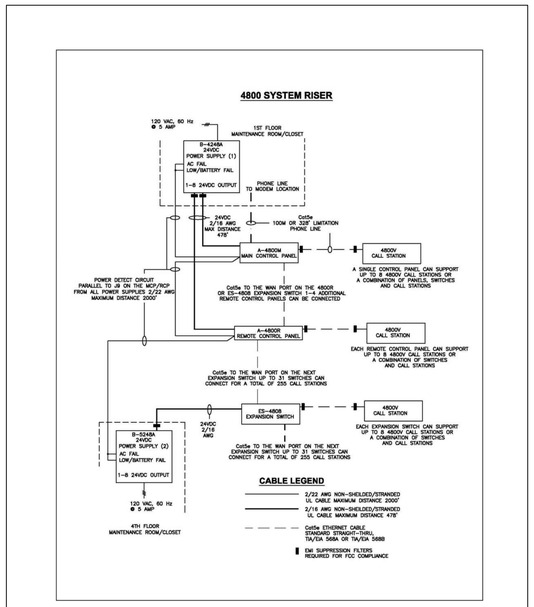

CORNELL COMMUNICATIONS, INC.
Milwaukee, Wisconsin USA ■ 800-558-8957 ■ 414-351-4660 ■ Fax 414-351-4657
www.cornell.com ■ sales@cornell.com

2-WAY COMMUNICATION SYSTEM RESCUE ASSISTANCE ANNUNCIATOR WIRING DIAGRAM (TYP)

SCALE: NONE

4

DESIGN/BUILD SYSTEM - SCOPE:
PROVIDE A 2-WAY COMMUNICATION PANEL WITH COMMUNICATION FROM MAIN BUILDING ENTRY LOBBY (OR LOBBIES) TO ALL REMOTE CALL STATIONS LOCATED AT EACH ELEVATOR LOBBY (AND AREAS OF REFUGE, IF APPLICABLE).
SYSTEM SHALL DIRECTLY CALL 9-1-1 OR MONITORING LOCATION IF NO ATTENDANT PICKS UP.

COORDINATE ALL REQUIREMENTS, LOCATIONS, AND QUANTITIES WITH LOCAL CODES AND THE FIRE DEPARTMENT PRIOR TO PURCHASE.

CONTRACTOR IS RESPONSIBLE FOR SUBMITTING FULL PLANS FOR PERMITTING AND APPROVAL.

BASIS OF DESIGN:
CORNELL RESCUE ASSISTANCE SERIES 4800 OR EQUIVALENT.
PROVIDE TELEPHONE ACCESS KIT TAK-4202.

LOCATIONS:
CONTRACTOR IS RESPONSIBLE FOR PROVIDING ALL NECESSARY LOCATIONS.

WIRING AND RACEWAY:
WIRING FOR SYSTEM IS CIRCUIT CLASS B, LEVEL 3 PATHWAY SURVIVABILITY. PROVIDE TWO HOUR RATED CABLE (UL LISTED) INSTALLED IN CONDUIT, DO NOT ASSUME A 2-HR CHASE WILL BE PROVIDED. PENETRATIONS MUST BE SEALED IN A MANNER THAT PROVIDES A FIRE RESISTANCE RATING EQUIVALENT TO THE ENCLOSURE.

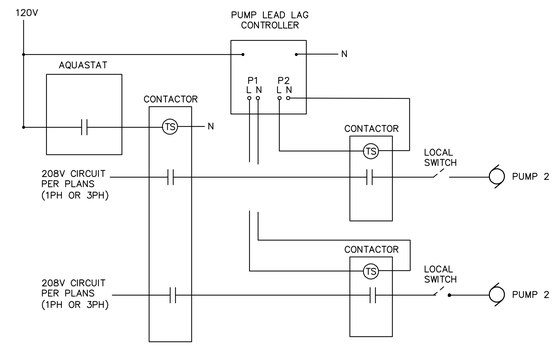

OPERATION: PUMP OPERATION TO BE CONTROLLED BY THE AQUASTAT. LEAD/LAG CONTROLLER TO ALTERNATE PUMP OPERATION. SET TO 7-DAY ROTATION (EX: PUMP 1 RUNS FOR 7 DAYS, PUMP 2 RUNS FOR 7 DAYS, ETC).
MANUAL SWITCHES FOR MAINTENANCE ONLY.

CONTROL DEVICES	
CONTACTORS	CONTACTOR, 20A CONTACTS, NORMALLY-OPEN 120V COIL, NEMA 1. COMPACT, 2 OR 3 POLES (REF PLANS), 208-240VAC
AQUASTAT	FURNISHED AND INSTALLED BY PLUMBING CONTRACTOR. WIRING BY ELECTRICAL CONTRACTOR, POWER FROM NEARBY CONVENIENCE OUTLET.
PUMP LEAD LAG CONTROLLER	HEAT TIMER CORPORATION: PUMP-LEAD-LAG FURNISHED BY PLUMBING CONTRACTOR, INSTALLED BY ELECTRICAL CONTRACTOR. POWER FROM NEARBY CONVENIENCE OUTLET.

HOT WATER CIRC. CONTROLS AQUASTAT & TIMER WIRING

DETAIL

SCALE: NONE

5

COUNTY OF SANTA CLARA
BUILDING INSPECTION OFFICE
PLANS APPROVED FOR PERMIT
RECORD NO.: DEV22-1242
BY: rick.gomes Date: 07/28/2023
HARD COPY OF THESE STAMPED PLANS MUST BE ON THE SITE FOR INSPECTIONS

REGISTERED PROFESSIONAL ENGINEER ADAM C. FRENCH E-19421 EXP. 3-31-24 ELECTRICAL STATE OF CALIFORNIA

03-20-23

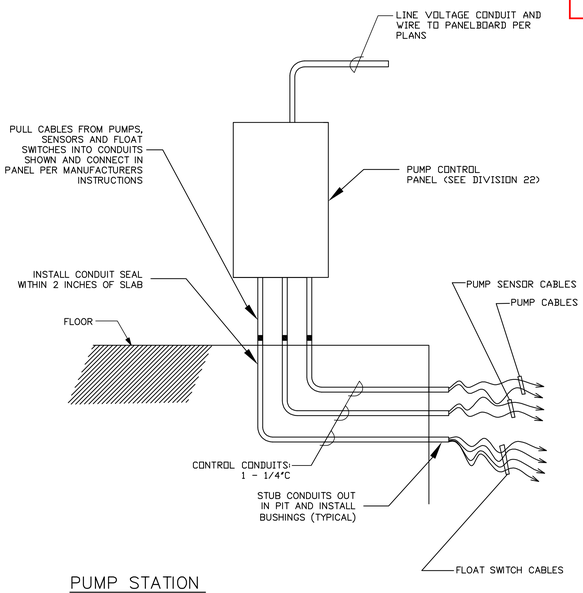

PUMP STATION DIAGRAM

SCALE: NONE

6

ID	DATE	NAME
1	11/11/2022	PERMIT CONVENTIONAL
A	12/16/2022	BID SET
B	03/20/2023	BID ADDENDUM
2	03/20/2023	PLAN CHECK RESPONSE 2

Project:

EDUCATOR HOUSING
231 GRANT AVENUE

231 GRANT AVENUE
PALO ALTO, CA 94306

Client:
MERCY HOUSING/
ABODE COMMUNITIES

DETAILS AND DIAGRAMS

JOB #: 2293-007
SCALE: AS NOTED

E6.03

PLAN CHECK RESPONSE 2 | DATE: 03/20/2023

COPYRIGHT 2023, EMERALD CITY ENGINEERS, INC.
M:\LAYTON a\2293-007 231 GRANT, PALO ALTO, CA\DWG\E603 DETAILS AND DIAGRAMS.DWG 03-17-2023 11:40

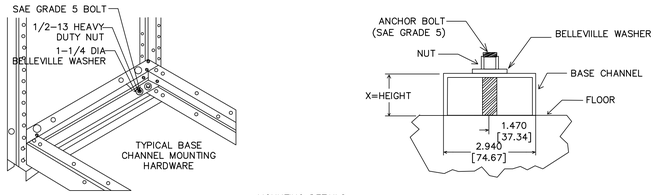

MOUNTING DETAILS

ANCHORING FOR SEISMIC RATING:
EACH SECTION MUST BE ANCHORED AT ALL LOCATIONS (REFER TO FLOOR PLANS AND ONELINE FOR QUANTITY OF SECTIONS). ANCHOR BOLT MOUNTING POINTS ARE 0.75 IN. DIAMETER HOLES LOCATED 1.50 IN. OR 3.00 IN. ABOVE THE BASE OF THE SECTION.

THE BELLEVILLE WASHER (SHOWN IN DETAIL ABOVE) USED FOR ANCHORING CONNECTIONS IS A TESTED COMPONENT AND IS REQUIRED TO MAINTAIN POSITION RETENTION OF THE EQUIPMENT. THE SLIP CRITICAL CONNECTION PERFORMANCE OF THE BOLTED CONNECTION WAS ESTABLISHED TO THE SHAKE TABLE TESTED SEISMIC CAPACITY OF THE EQUIPMENT AS SHOWN ON THE EQUIPMENT SEISMIC CERTIFICATE SUPPLIED AT THE TIME OF ORDER.

CENTER OF GRAVITY CALCULATIONS
ELEVATION CENTER OF GRAVITY: 55 IN. UP FROM FLOOR
VERTICAL CENTER OF GRAVITY: USE CENTERLINE OF SECTION FROM LEFT TO RIGHT
DEPTH OF GRAVITY: USE CENTERLINE OF THE SECTION FROM FRONT TO REAR.

WEIGHT
EACH SECTION OF SWITCHGEAR IS A MAXIMUM OF 1000 LBS EACH.

SWITCHGEAR ANCHORAGE DETAIL 1

SCALE: NONE

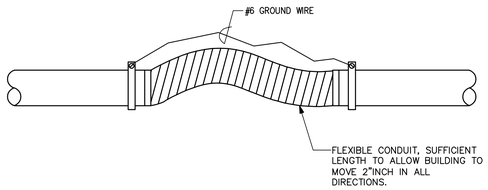

SEISMIC JOINT CONDUIT DETAIL 2

SCALE: NONE

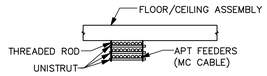

NOTES
1. ROUTE APARTMENT FEEDERS TIGHT TO CEILING WITH UNISTRUT AS SHOWN.
2. FOR MC CABLES, MAINTAIN A MINIMUM OF 1/4" SPACING BETWEEN CABLES.
3. PER CALIFORNIA ELECTRICAL CODE, MC CABLES MAY COME IN CONTACT FOR A MAXIMUM OF 24" BEFORE TEMPERATURE CORRECTION FACTORS HAVE TO BE ACCOUNTED FOR.

MC APARTMENT FEEDERS DETAIL 3

SCALE: NONE

BRANCH CIRCUIT VOLTAGE DROP 208/120 VOLT SINGLE PHASE CIRCUITS:

MAXIMUM #12 WIRE RUN LENGTHS WITH 2% MAXIMUM VOLTAGE DROP:	
KVA OF CIRCUIT	MAXIMUM FEEDER LENGTH IN FEET BEFORE WIRE MUST BE UPSIZED
0.0–0.1 KVA	1120 FT.
0.1–0.2 KVA	560 FT.
0.2–0.3 KVA	370 FT.
0.3–0.4 KVA	280 FT.
0.4–0.5 KVA	220 FT.
0.5–0.6 KVA	180 FT.
0.6–0.7 KVA	160 FT.
0.7–0.8 KVA	140 FT.
0.8–0.9 KVA	120 FT.
0.9–1.0 KVA	110 FT.
1.0–1.1 KVA	100 FT.
1.1–1.2 KVA	90 FT.
1.2–1.3 KVA	80 FT.
1.3–1.4 KVA	80 FT.
1.4–1.5 KVA	70 FT.
1.5–1.6 KVA	70 FT.
1.6–1.7 KVA	60 FT.
1.7–1.8 KVA	60 FT.
1.8–1.9 KVA	50 FT.
1.9–2.0 KVA	50 FT.

TABLE IS TO BE USED TO DETERMINE THE MAXIMUM RUN LENGTH FOR #12 GAUGE AL WIRE WHERE VOLTAGE DROP OF PANEL FEEDING CIRCUIT, AS LISTED IN ONE–LINE VOLTAGE DROP SCHEDULE, IS BETWEEN 2–3% IF RUN IS LONGER THAN THAT SPECIFIED IN THIS TABLE FOR CIRCUIT'S KVA RATING, UPSIZE WIRE TO MAINTAIN VOLTAGE DROP

MAXIMUM #12 WIRE RUN LENGTHS WITH 3% MAXIMUM VOLTAGE DROP:	
KVA OF CIRCUIT	MAXIMUM FEEDER LENGTH IN FEET BEFORE WIRE MUST BE UPSIZED
0.0–0.1 KVA	1680 FT.
0.1–0.2 KVA	840 FT.
0.2–0.3 KVA	560 FT.
0.3–0.4 KVA	420 FT.
0.4–0.5 KVA	330 FT.
0.5–0.6 KVA	280 FT.
0.6–0.7 KVA	240 FT.
0.7–0.8 KVA	210 FT.
0.8–0.9 KVA	180 FT.
0.9–1.0 KVA	160 FT.
1.0–1.1 KVA	150 FT.
1.1–1.2 KVA	140 FT.
1.2–1.3 KVA	120 FT.
1.3–1.4 KVA	120 FT.
1.4–1.5 KVA	110 FT.
1.5–1.6 KVA	100 FT.
1.6–1.7 KVA	90 FT.
1.7–1.8 KVA	90 FT.
1.8–1.9 KVA	80 FT.
1.9–2.0 KVA	80 FT.

TABLE IS TO BE USED TO DETERMINE THE MAXIMUM RUN LENGTH FOR #12 GAUGE WIRE WHERE VOLTAGE DROP OF PANEL FEEDING CIRCUIT, AS LISTED IN ONE–LINE VOLTAGE DROP SCHEDULE, IS LESS THAN OR EQUAL TO 2%. IF RUN IS LONGER THAN THAT SPECIFIED IN THIS TABLE FOR CIRCUIT'S KVA RATING, UPSIZE WIRE TO MAINTAIN VOLTAGE DROP

VOLTAGE DROP TABLE 4

SCALE: NONE

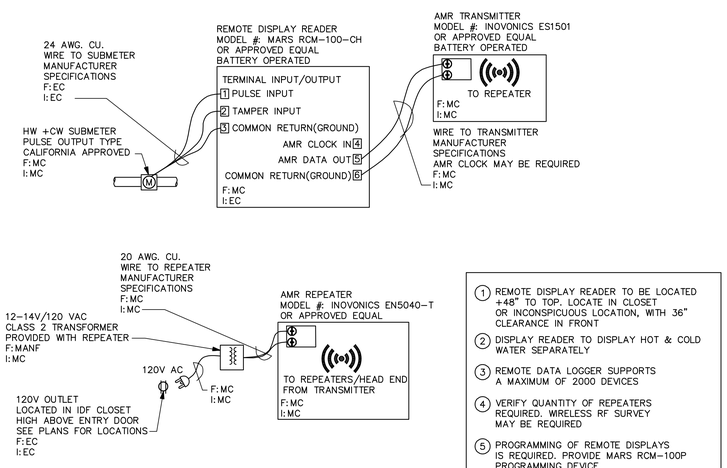

1. REMOTE DISPLAY READER TO BE LOCATED +48" TO TOP. LOCATE IN CLOSET OR INCONSPICUOUS LOCATION, WITH 36" CLEARANCE IN FRONT
2. DISPLAY READER TO DISPLAY HOT & COLD WATER SEPARATELY
3. REMOTE DATA LOGGER SUPPORTS A MAXIMUM OF 2000 DEVICES
4. VERIFY QUANTITY OF REPEATERS REQUIRED. WIRELESS RF SURVEY MAY BE REQUIRED
5. PROGRAMMING OF REMOTE DISPLAYS IS REQUIRED. PROVIDE MARS RCM–100P PROGRAMMING DEVICE.
6. VERIFY BILLING SYSTEM REQURIED WITH OWNERSHIP

LEGEND	
F: _ FURNISHED BY I: _ INSTALLED BY	EC – ELECTRICAL CONTRACTOR MC – MECHANICAL CONTRACTOR MANF – MANUFACTURER

DETAIL IS DIAGRAMMATIC. CONTRACTOR IS TO PROVIDE ALL COMPONENTS FOR A FULLY FUNCTIONAL SYSTEM.

WATER SUBMETER – REMOTE DISPLAY DETAIL 5

SCALE: NONE

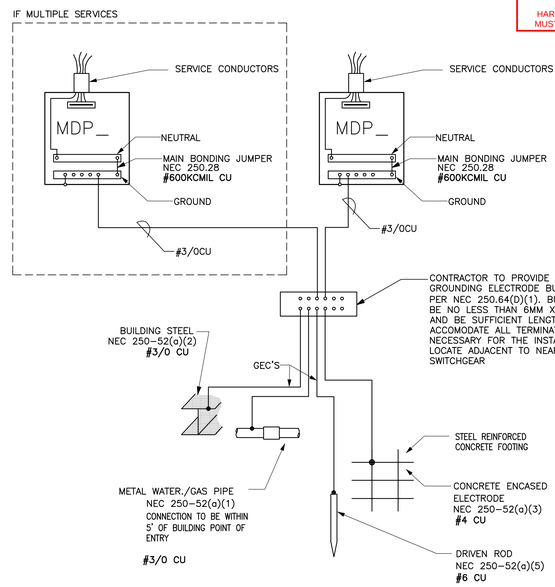

GROUNDING ELECTRODE SYSTEM DETAIL 7

SCALE: NONE

VAN METER WILLIAMS POLLACK LLP
ARCHITECTURE | URBAN DESIGN ■ SAN FRANCISCO | DENVER | MINNEAPOLIS
333 Bryant Street, Suite 300, San Francisco, CA 94107 T 415.974.5252

CIVIL ENGINEER
BKF ENGINEERS
1730 N. FIRST ST SUITE 600
SAN JOSE, CA 95112

JOINT TRENCH / DRY UTILITIES
MILLENIUM DESIGN
PO BOX 737
ALAMO, CA 94507

LANDSCAPE ARCHITECT
PLURAL STUDIO
2742 17TH STREET
SAN FRANCISCO, CA 94110

STRUCTURAL ENGINEER
HOHBACH-LEWIN, INC
250 SHERIDAN AVE STE 100
PALO ALTO, CA 94306

MEP ENGINEER
EMERALD CITY ENGINEERS
21705 HIGHWAY 99
LYNNWOOD, WA 98036

ENERGY CONSULTANT
REDWOOD ENERGY
1887 G STREET
ARCATA, CA 95521

EMERALD CITY ENGINEERS, INC
21705 Highway 99
Lynnwood, WA 98036
TEL: 425-741-1200

COUNTY OF SANTA CLARA
BUILDING INSPECTION OFFICE
PLANS APPROVED FOR PERMIT
RECORD NO.: DEV22-1242
BY: rick.gomes Date: 07/28/2023
HARD COPY OF THESE STAMPED PLANS MUST BE ON THE SITE FOR INSPECTIONS

REGISTERED PROFESSIONAL ENGINEER — ADAM C. FRENCH — EXP. 6-30-24 — ELECTRICAL — STATE OF CALIFORNIA
03-20-23

ID	DATE	NAME
1	11/11/2022	PERMIT CONVENTIONAL
A	12/16/2022	BID SET
B	03/20/2023	BID ADDENDUM
2	03/20/2023	PLAN CHECK RESPONSE 2

Project:

EDUCATOR HOUSING
231 GRANT AVENUE

231 GRANT AVENUE
PALO ALTO, CA 94306

Client:
MERCY HOUSING/
ABODE COMMUNITIES

DETAILS AND DIAGRAMS

JOB #: 2293-007
SCALE: AS NOTED

E6.04

PLAN CHECK RESPONSE 2 | DATE: 03/20/2023

COPYRIGHT 2023, EMERALD CITY ENGINEERS, INC.
XCLAYTON: J:\2293-007 231 GRANT, PALO ALTO, CA\DWG\E604 DETAILS AND DIAGRAMS.DWG 03-17-2023 11:40

STATE OF CALIFORNIA
Electrical Power Distribution
NRCC-ELC-E — CALIFORNIA ENERGY COMMISSION

CERTIFICATE OF COMPLIANCE		NRCC-ELC-E
This document is used to demonstrate compliance with mandatory requirements in §130.5, for electrical systems in newly constructed nonresidential, high-rise residential and hotel/motel occupancies. Additions and alterations to electrical service systems in these occupancies will also use this document to demonstrate compliance per §141.0(a) or §141.0(b)2F for alterations..		
Project Name: Educator Housing 231 Grant Avenue	**Report Page:**	**(Page 1 of 6)**
Project Address:	**Date Prepared:**	2022-11-11T19:15:30-05:00

A. GENERAL INFORMATION

01	Project Location (city)	Palo Alto
02	Occupancy Types Within Project:	
● High-Rise Residential		

B. PROJECT SCOPE

This table includes electrical systems that are within the scope of the permit application.

01		02	03	04	05
Electrical Service Designation/Description		Scope of Work[1]	Rating (kVA)	Utility Provided Metering System Exception to §130.5(a) [2]	System subject to CA Elec Code Article 517 Exception to §130.5(a)and (b)
MDP-H - Common Area Service - sheet E3.01W for electrical room		New electrical service equipment and meter	1500	☒	☐
06	Demand Response Controls	Where required, demand response controls must be specified which are capable of receiving and automatically responding to at least one standards based messaging protocol which enables demand response after receiving a demand response signal. Sections §120.2, §130.1 and §130.3 and compliance documents NRCC-MCH, NRCC-LTI and NRCC-LTS will indicate when demand response controls are required.			

[1] FOOTNOTES: Adding only new feeders and branch circuits triggers Voltage Drop 130.5(c), no other requirements from 130.5 are required.
[2] Applicable if the utility company is providing a metering system that indicates instantaneous kW demand and kWh for a utility-defined period.

C. COMPLIANCE RESULTS

Results in this table are automatically calculated from data input and calculations in Tables F through I. Note: If any cell on this table says "COMPLIES with Exceptional Conditions" refer to Table D. Exceptional Conditions for guidance or see applicable Table referenced below.

01		02		03		04	05
Service Electrical Metering §130.5(a) (See Table F)	AND	Separation for Monitoring §130.5(b) (See Table G)	AND	Voltage Drop §130.5(c) (See Table H)	AND	Controlled Receptacles §130.5(d) (See Table I)	
	AND	Yes	AND	Yes	AND	Yes	COMPLIES with Exceptional Conditions

Registration Number: — Generated Date/Time: — Documentation Software: Energy Code Ace
CA Building Energy Efficiency Standards - 2019 Nonresidential Compliance — Report Version: 2019.1.003 — Schema Version: rev 20200601 — Compliance ID: 67345 — Report Generated: 2022-11-11 16:15:34

STATE OF CALIFORNIA
Electrical Power Distribution
NRCC-ELC-E — CALIFORNIA ENERGY COMMISSION

CERTIFICATE OF COMPLIANCE		NRCC-ELC-E
Project Name: Educator Housing 231 Grant Avenue	**Report Page:**	**(Page 2 of 6)**
Project Address:	**Date Prepared:**	2022-11-11T19:15:30-05:00

D. EXCEPTIONAL CONDITIONS

This table is auto-filled with uneditable comments because of selections made or data entered in tables throughout the form.

G. Separation of Electrical Circuits for Energy Monitoring Applicant Notes	[PlugLoadsGTE25kVA] (MDP-L - Residential Service - sheet E3.01W for electrical room - Lighting including exit, egress and exterior) Residential Service - Meterbanks for residential units.

The permit applicant has indicated on Table H that voltage drop calculations will be provided by the contractor.

Table B indicates the project is exempt from §130.5(a) Service Electrical Metering requirements because the utility company has provided the project a metering system that indicates instantaneous kW demand and kWh for a utility-defined period.

E. ADDITIONAL REMARKS

This table is includes remarks made by the permit applicant to the Authority Having Jurisdiction.

F. SERVICE ELECTRICAL METERING

This section does not apply to this project.

Registration Number: — Generated Date/Time: — Documentation Software: Energy Code Ace
CA Building Energy Efficiency Standards - 2019 Nonresidential Compliance — Report Version: 2019.1.003 — Schema Version: rev 20200601 — Compliance ID: 67345 — Report Generated: 2022-11-11 16:15:34

STATE OF CALIFORNIA
Electrical Power Distribution
NRCC-ELC-E — CALIFORNIA ENERGY COMMISSION

CERTIFICATE OF COMPLIANCE		NRCC-ELC-E
Project Name: Educator Housing 231 Grant Avenue	**Report Page:**	**(Page 3 of 6)**
Project Address:	**Date Prepared:**	2022-11-11T19:15:30-05:00

G. SEPARATION OF ELECTRICAL CIRCUITS FOR ENERGY MONITORING

This table includes entirely new or complete replacement electrical power distribution systems to demonstrate compliance with §130.5(b). Any load types that are not included in the service do not need to be shown.

01	02	03	04	05	
Load Type per Table 130.5-B[1]	Minimum Required Separation of Load per Table 130.5-B	Compliance Method[2]	Location of Requirements in Construction Documents	Field Inspector	
				Pass	Fail
MDP-H - Common Area Service - sheet E3.01W for electrical room					
Charging stations for electrical vehicle	All loads in aggregate	Method 1	EV Panel - E5.00	☐	☐
Domestic and service water systems	All loads in aggregate	Method 1	W1A panel - E5.00	☐	☐
Elevators, escalators, moving walkways	All loads in aggregate	Method 3	Elevator on E5.00 oneline	☐	☐
HVAC systems and components	All HVAC in aggregate and each HVAC load rated at least 50 kVA	Method 1	Mechanical panels - sheet E5.00 oneline	☐	☐
Lighting including exit, egress and exterior	All lighting disaggregated by floor, type or area	Method 1	Lighting panels - sheet E5.00 oneline	☐	☐
Plug Loads and appliances less than 25kVA	All plug loads separated by floor, type or area Groups of plug loads exceeding 25 kVA connected load in an area less than 5000 sf	Method 1	Plug load panels - sheet E5.00 oneline	☐	☐
MDP-L - Residential Service - sheet E3.01W for electrical room					
Other non-HVAC loads and appliances greater than or equal to 25kVA	All loads in aggregate	Other*	E500 meterbanks	☐	☐

** NOTES: If "Other*" is selected under Compliance Method above, please indicate how compliance has been achieved in the space provided below.*

PlugLoadsGTE25kVA	(MDP-L - Residential Service - sheet E3.01W for electrical room - Lighting including exit, egress and exterior) Residential Service - Meterbanks for residential units.

[1] FOOTNOTES: For each separate load type, up to 10% of the connected load may be of any type.
[2] Method 1: Switchboards/ motor control centers/ panelboard loads disaggregated for each load type.
Method 2: Switchboards/ motor control centers/ panelboard supply other distribution equipment with loads disaggregated for each load type.
Method 3: Branch circuits serve load types individually and provisions for adding future branch circuit monitoring.
Method 4: Complete metering system measures and reports loads by type.
See Chapter 8 of the Nonresidential Compliance Manual for more detail on Compliance Methods.

Registration Number: — Generated Date/Time: — Documentation Software: Energy Code Ace
CA Building Energy Efficiency Standards - 2019 Nonresidential Compliance — Report Version: 2019.1.003 — Schema Version: rev 20200601 — Compliance ID: 67345 — Report Generated: 2022-11-11 16:15:34

STATE OF CALIFORNIA
Electrical Power Distribution
NRCC-ELC-E — CALIFORNIA ENERGY COMMISSION

CERTIFICATE OF COMPLIANCE		NRCC-ELC-E
Project Name: Educator Housing 231 Grant Avenue	**Report Page:**	**(Page 4 of 6)**
Project Address:	**Date Prepared:**	2022-11-11T19:15:30-05:00

H. VOLTAGE DROP

This table includes entirely new or complete replacement electrical power distribution systems, or alterations that add, modify or replace both feeders and branch circuits to demonstrate compliance with §130.5(c). For alterations, only the altered circuits must demonstrate compliance per §141.0(b)2Pii

01	02				03	04	05	
Electrical Service Designation/Description	Combined Voltage Drop on Installed Feeder/Branch Circuit Conductors Compliance Method				Location of Voltage Drop Calculations[1]	Sheet Number for Voltage Drop Calculations in Construction Documents	Field Inspector	
							Pass	Fail
MDP-H - Common Area Service - sheet E3.01W for electrical room	☒	Voltage drop less than 5%	☐	Permitted by CA Elec Code (Exception to 130.5(c))*	In construction documents	Sheet E5.04 Voltage Drop Schedule	☐	☐
MDP-L - Residential Service - sheet E3.01W for electrical room	☒	Voltage drop less than 5%	☐	Permitted by CA Elec Code (Exception to 130.5(c))*	Contractor Responsible		☐	☐

** NOTES: If "Permitted by CA Elec Code *" is selected under Compliance Method above, please indicate where the exception applies in the space provided below.*

[1] FOOTNOTES: Voltage drop calculations may be attached to the permit application outside the construction documents if allowed by the Authority Having Jurisdiction. Select "attached" if applicable. If calculations will be the responsibility of the installing contractor, select "Contractor Responsible".

I.CIRCUIT CONTROLS FOR 120-VOLT RECEPTACLES AND CONTROLLED RECEPTACLES

This table includes entirely new or complete replacement electrical power distribution systems to demonstrate compliance with §130.5(d). Both controlled and uncontrolled receptacles must be provided in office areas, lobbies, conference rooms, kitchen areas in office spaces, copy rooms and hotel/motel guest rooms.

01	02	03	04	05	06	
Room name or Description	Location/ Type of Controlled Receptacles	Shut-Off Controls	Permanent Durable Marking Will be Used	Location of Requirements in Construction Documents	Field Inspector	
					Pass	Fail
Offices, Meeting room and Property Management Office,	Within 6ft of uncontrolled AND Split-wired receptacle	Occupancy Sensor	☒	E3.02E	☐	☐

** NOTES: If "Other*" is selected under Shut-Off Controls above, please indicate how compliance has been achieved in the space provided below.*

Registration Number: — Generated Date/Time: — Documentation Software: Energy Code Ace
CA Building Energy Efficiency Standards - 2019 Nonresidential Compliance — Report Version: 2019.1.003 — Schema Version: rev 20200601 — Compliance ID: 67345 — Report Generated: 2022-11-11 16:15:34

STATE OF CALIFORNIA
Electrical Power Distribution
NRCC-ELC-E — CALIFORNIA ENERGY COMMISSION

CERTIFICATE OF COMPLIANCE		NRCC-ELC-E
Project Name: Educator Housing 231 Grant Avenue	**Report Page:**	**(Page 5 of 6)**
Project Address:	**Date Prepared:**	2022-11-11T19:15:30-05:00

J. DECLARATION OF REQUIRED CERTIFICATES OF INSTALLATION

Selections have been made based on information provided in this document. If any selection have been changed by permit applicant, an explanation should be included in Table E. Additional Remarks. These documents must be provided to the building inspector during construction and can be found online at https://www.energy.ca.gov/title24/2019standards/2019_compliance_documents/Nonresidential_Documents/NRCI/

Form/Title
NRCI-ELC-01-E - Must be submitted for all buildings

K. DECLARATION OF REQUIRED CERTIFICATES OF ACCEPTANCE

There are no Certificates of Acceptance applicable to electrical power distribution requirements.

Registration Number: — Generated Date/Time: — Documentation Software: Energy Code Ace
CA Building Energy Efficiency Standards - 2019 Nonresidential Compliance — Report Version: 2019.1.003 — Schema Version: rev 20200601 — Compliance ID: 67345 — Report Generated: 2022-11-11 16:15:34

STATE OF CALIFORNIA
Electrical Power Distribution
NRCC-ELC-E — CALIFORNIA ENERGY COMMISSION

CERTIFICATE OF COMPLIANCE		NRCC-ELC-E
Project Name: Educator Housing 231 Grant Avenue	**Report Page:**	**(Page 6 of 6)**
Project Address:	**Date Prepared:**	2022-11-11T19:15:30-05:00

DOCUMENTATION AUTHOR'S DECLARATION STATEMENT

I certify that this Certificate of Compliance documentation is accurate and complete.

Documentation Author Name: Kevin Clayton	Documentation Author Signature: Kevin Clayton
Company: Emerald City Engineers	Signature Date: 11/11/2022
Address: 21705 Highway 99	CEA/ HERS Certification Identification (if applicable):
City/State/Zip: Lynnwood, WA 98036	Phone: 425-741-1200

RESPONSIBLE PERSON'S DECLARATION STATEMENT

I certify the following under penalty of perjury, under the laws of the State of California:

1. The information provided on this Certificate of Compliance is true and correct.
2. I am eligible under Division 3 of the Business and Professions Code to accept responsibility for the building design or system design identified on this Certificate of Compliance (responsible designer)
3. The energy features and performance specifications, materials, components, and manufactured devices for the building design or system design identified on this Certificate of Compliance conform to the requirements of Title 24, Part 1 and Part 6 of the California Code of Regulations.
4. The building design features or system design features identified on this Certificate of Compliance are consistent with the information provided on other applicable compliance documents, worksheets, calculations, plans and specifications submitted to the enforcement agency for approval with this building permit application.
5. I will ensure that a completed signed copy of this Certificate of Compliance shall be made available with the building permit(s) issued for the building, and made available to the enforcement agency for all applicable inspections. I understand that a completed signed copy of this Certificate of Compliance is required to be included with the documentation the builder provides to the building owner at occupancy.

Responsible Designer Name: Adam Clayton French P.E.	Responsible Designer Signature:
Company: Emerald City Engineers	Date Signed: 11/11/2022
Address: 21705 Highway 99	License:
City/State/Zip: Lynnwood, WA 98036	Phone: 425-741-1200

Registration Number: — Generated Date/Time: — Documentation Software: Energy Code Ace
CA Building Energy Efficiency Standards - 2019 Nonresidential Compliance — Report Version: 2019.1.003 — Schema Version: rev 20200601 — Compliance ID: 67345 — Report Generated: 2022-11-11 16:15:34

COUNTY OF SANTA CLARA
BUILDING INSPECTION OFFICE
PLANS APPROVED FOR PERMIT
RECORD NO.: DEV22-1242
BY: rick.gomes Date: 07/28/2023
HARD COPY OF THESE STAMPED PLANS MUST BE ON THE SITE FOR INSPECTIONS

VAN METER WILLIAMS POLLACK LLP
ARCHITECTURE | URBAN DESIGN ■ SAN FRANCISCO | DENVER | MINNEAPOLIS
333 Bryant Street, Suite 300, San Francisco, CA 94107 T 415.974.5252

CIVIL ENGINEER
BKF ENGINEERS
1730 N. FIRST ST SUITE 600
SAN JOSE, CA 95112

JOINT TRENCH / DRY UTILITIES
MILLENIUM DESIGN
PO BOX 737
ALAMO, CA 94507

LANDSCAPE ARCHITECT
PLURAL STUDIO
2742 17TH STREET
SAN FRANCISCO, CA 94110

STRUCTURAL ENGINEER
HOHBACH-LEWIN, INC
250 SHERIDAN AVE STE 100
PALO ALTO, CA 94306

MEP ENGINEER
EMERALD CITY ENGINEERS
21705 HIGHWAY 99
LYNWOOD, WA 98036

ENERGY CONSULTANT
REDWOOD ENERGY
1887 Q STREET
ARCATA, CA 95521

EMERALD CITY ENGINEERS, INC
21705 Highway 99
Lynnwood, WA 98036
TEL: 425-741-1200

REGISTERED PROFESSIONAL ENGINEER — ADAM C. FRENCH — E-39421 — EXP. 3-31-24 — ELECTRICAL — STATE OF CALIFORNIA
03-20-23

ID	DATE	NAME
1	11/11/2022	PERMIT CONVENTIONAL
A	12/16/2022	BID SET
B	03/20/2023	BID ADDENDUM
2	03/20/2023	PLAN CHECK RESPONSE 2

Project:

EDUCATOR HOUSING
231 GRANT AVENUE

231 GRANT AVENUE
PALO ALTO, CA 94306

Client:
MERCY HOUSING/
ABODE COMMUNITIES

T24 ENERGY CODE

JOB #: 2293-007
SCALE: AS NOTED

E7.00

PLAN CHECK RESPONSE 2 | DATE: 03/20/2023

COPYRIGHT 2023, EMERALD CITY ENGINEERS, INC.
M:\LAYTON\ J:\2293-007 231 GRANT, PALO ALTO, CA\DWG\E700 T24 ENERGY CODE.DWG 03-17-2023 11:40

STATE OF CALIFORNIA
Indoor Lighting
NRCC-LTI-E — CALIFORNIA ENERGY COMMISSION

CERTIFICATE OF COMPLIANCE		NRCC-LTI-E
Project Name:	Educator Housing 231 Grant Avenue	Report Page: (Page 1 of 9)
Project Address:		Date Prepared: 2022-11-11T18:59:50-05:00

This document is used to demonstrate compliance with requirements in §110.9, §110.12(c), §130.0, §130.1, §140.6 and §141.0(b)2 for indoor lighting scopes using the prescriptive path.

A. GENERAL INFORMATION

01	Project Location (city)	Palo Alto	04	Total Conditioned Floor Area (ft²)	7,225
02	Climate Zone	4	05	Total Unconditioned Floor Area (ft²)	40,153
03	Occupancy Types Within Project (select all that apply):		06	# of Stories (Habitable Above Grade)	4

● High-Rise Residential ● Parking Garage

B. PROJECT SCOPE

This table includes any lighting systems that are within the scope of the permit application and are demonstrating compliance using the prescriptive path outlined in §140.6 or §141.0(b)2 for alterations.

Scope of Work	Conditioned Spaces		Unconditioned Spaces	
01	02	03	04	05
My Project Consists of (check all that apply):	Calculation Method	Area (ft²)	Calculation Method	Area (ft²)
☒ New Lighting System	Area Category Method	7225	Area Category Method	19029
☒ New Lighting System - Parking Garage	N/A	0	Complete Building Method	21124
Total Area of Work (ft²)	7225		40153	

C. COMPLIANCE RESULTS

If any cell on this table says "DOES NOT COMPLY" or "COMPLIES with Exceptional Conditions" refer to Table D. for guidance.

Lighting in conditioned and unconditioned spaces must not be combined for compliance per §140.6(b)1	Allowed Lighting Power per §140.6(b) (Watts)						Adjusted Lighting Power per §140.6(a) (Watts)						Compliance Results
	01	02	03	04	05		06	07		08			09
	Complete Building §140.6(c)1	Area Category §140.6(c)2	Area Category Additional §140.6(c)2G (+)	Tailored §140.6(c)3 (+)	**Total Allowed** (Watts)		Total Designed (Watts)	Adjustments PAF Lighting Control Credits §140.6(a)2 (-)		**Total Adjusted** (Watts) *Includes Adjustments			**05 must be >= 08 §140.6**
	(See Table I)	(See Table I)	(See Table J)	(See Table K)			(See Table F)	(See Table P)					
Conditioned	0	3,944.05			= 3,944.05	≥	2,758.5		=	2758.5			COMPLIES
Unconditioned	0	11,668.5			= 11,668.5	≥	8,074.1		=	8074.1			COMPLIES

Registration Number: — Generated Date/Time: — Documentation Software: Energy Code Ace

CA Building Energy Efficiency Standards - 2019 Nonresidential Compliance — Report Version: 2019.1.003 Schema Version: rev 20200601 — Compliance ID: 67345 Report Generated: 2022-11-11 15:59:54

STATE OF CALIFORNIA
Indoor Lighting
NRCC-LTI-E — CALIFORNIA ENERGY COMMISSION

CERTIFICATE OF COMPLIANCE		NRCC-LTI-E
Project Name:	Educator Housing 231 Grant Avenue	Report Page: (Page 2 of 9)
Project Address:		Date Prepared: 2022-11-11T18:59:50-05:00

C. COMPLIANCE RESULTS

Controls Compliance (See Table H for Details)	COMPLIES with Exceptional Conditions
Rated Power Reduction Compliance (See Table Q for Details)	

D. EXCEPTIONAL CONDITIONS

This table is auto-filled with uneditable comments because of selections made or data entered in tables throughout the form.

H. Indoor Lighting Controls (Not including PAFs) Permit Applicant Notes	[CORRIDORS] [Shut-Off Controls] CORRIDORS TO DIM TO 50% WHEN UNOCCUPIED -- [STORAGE] [Multilevel Controls] Not Required: Space <= 0.5 W/sf -- [PARKING GARAGE] [Shut-Off Controls] WHEN UNOCCUPIED, DIM TO 50% -- [LOBBY] [Shut-Off Controls] EXCEPTION 1: CONTINUOUS USE 24/7/365 -- [MECHANICAL ELECTRICAL] (Multilevel Controls) Not Required: Space <= 0.5 W/sf --- (Shut-Off Controls) EXCEPTION 4: ELECTRICAL EQUIPMENT ROOMS.

E. ADDITIONAL REMARKS

This table includes remarks made by the permit applicant to the Authority Having Jurisdiction.

F. INDOOR LIGHTING FIXTURE SCHEDULE

This table includes all permanent designed lighting and all portable lighting in offices.

Designed Wattage: Conditioned Spaces

01	02	03	04	05	06	07	08	09	10	
Name or Item Tag	Complete Luminaire Description	Modular (Track) Fixture	Small Aperture & Color Change[1]	Watts per luminaire[2]	How is Wattage determined	Total Number of Luminaires	Excluded per §140.6(a)3	Design Watts	Field Inspector	
									Pass	Fail
A2E	48" LED WRAP	No	No	31	Mfr. Spec	12	No	372	☐	☐
F01	LED DOWNLIGHT	No	No	11	Mfr. Spec	95	No	1,045	☐	☐
F02	WALL SCONCE	No	No	9	Mfr. Spec	5	No	45	☐	☐
F03	VANITY LIGHT	No	No	18	Mfr. Spec	4	No	72	☐	☐
F04	UNDERCABINET LIGHT	No	No	7	Mfr. Spec	4	No	28	☐	☐
F11	DECORATIVE PENDANT	No	No	72	Mfr. Spec	1	No	72	☐	☐

Registration Number: — Generated Date/Time: — Documentation Software: Energy Code Ace

CA Building Energy Efficiency Standards - 2019 Nonresidential Compliance — Report Version: 2019.1.003 Schema Version: rev 20200601 — Compliance ID: 67345 Report Generated: 2022-11-11 15:59:54

STATE OF CALIFORNIA
Indoor Lighting
NRCC-LTI-E — CALIFORNIA ENERGY COMMISSION

CERTIFICATE OF COMPLIANCE		NRCC-LTI-E
Project Name:	Educator Housing 231 Grant Avenue	Report Page: (Page 3 of 9)
Project Address:		Date Prepared: 2022-11-11T18:59:50-05:00

F. INDOOR LIGHTING FIXTURE SCHEDULE

F12	DECORATIVE LINEAR PENDANT	No	No	54	Mfr. Spec	1	No	54	☐	☐
F13	DESK PENDANT	No	No	9.5	Mfr. Spec	3	No	28.5	☐	☐
F14	CEILING CHANDELIER	No	No	72	Mfr. Spec	1	No	72	☐	☐
F16	2X2 PANEL LED	No	No	33	Mfr. Spec	19	No	627	☐	☐
F17	LINEAR LED LIGHT	No	No	53	Mfr. Spec	6	No	318	☐	☐
F18	DECORATIVE PENDANT	No	No	12.5	Mfr. Spec	2	No	25	☐	☐
							Total Designed Watts: CONDITIONED SPACES	2,758.5		

Designed Wattage: Unconditioned Spaces

01	02	03	04	05	06	07	08	09	10	
Name or Item Tag	Complete Luminaire Description	Modular (Track) Fixture	Small Aperture & Color Change[1]	Watts per luminaire[2]	How is Wattage determined	Total Number of Luminaires	Excluded per §140.6(a)3	Design Watts	Field Inspector	
									Pass	Fail
A5E	4' LINEAR LED WET LOCATION	No	No	33	Mfr. Spec	3	No	99	☐	☐
F01	LED DOWNLIGHT	No	No	11	Mfr. Spec	231	No	2,541	☐	☐
F02	WALL SCONCE	No	No	9	Mfr. Spec	110	No	990	☐	☐
F15	CEILING STRIP LIGHT	No	No	42	Mfr. Spec	25	No	1,050	☐	☐
F20	CEILING FAN	No	No	19.5	Mfr. Spec	9	No	175.5	☐	☐
P1	LINEAR PARKING GARAGE LIGHT	No	No	65	Mfr. Spec	31	No	2,015	☐	☐
P2	UTILITY LIGHT	No	No	35.4	Mfr. Spec	34	No	1,203.59	☐	☐
							Total Designed Watts: UNCONDITIONED SPACES	8,074.1		

[1]FOOTNOTE: Design Watts for small aperture and color changing luminaires which qualify per §140.6(a)4B is adjusted to be 75% of their rated wattage. Table F automatically makes this adjustment, the permit applicant should enter full rated wattage in column 05.

[2]Authority Having Jurisdiction may ask for Luminaire cut sheets to confirm wattage used for compliance per §130.0(c) Wattage used must be the maximum rated for the luminaire, not the lamp.

Registration Number: — Generated Date/Time: — Documentation Software: Energy Code Ace

CA Building Energy Efficiency Standards - 2019 Nonresidential Compliance — Report Version: 2019.1.003 Schema Version: rev 20200601 — Compliance ID: 67345 Report Generated: 2022-11-11 15:59:54

STATE OF CALIFORNIA
Indoor Lighting
NRCC-LTI-E — CALIFORNIA ENERGY COMMISSION

CERTIFICATE OF COMPLIANCE		NRCC-LTI-E
Project Name:	Educator Housing 231 Grant Avenue	Report Page: (Page 4 of 9)
Project Address:		Date Prepared: 2022-11-11T18:59:50-05:00

G. MODULAR LIGHTING SYSTEMS

This section does not apply to this project.

H. INDOOR LIGHTING CONTROLS (Not including PAFs)

*This table includes lighting controls for conditioned and unconditioned spaces. When a control having a * is shown, the notes section of this table provides more detail on how compliance is achieved. The lighting controls section of the Compliance Summary Table on the first page will show "DOES NOT COMPLY" if the notes are left blank.*

Building Level Controls

01	02	03	
		Field Inspector	
		Pass	Fail
Mandatory Demand Response §110.12(c)	Shut-off controls §130.1(c)	☐	☐
Not Required- Building <= 0.5W/SF	See Area/Space Level Controls		

Area Level Controls

04	05	06	07	08	09	10	11	12	
Area Description	Complete Building or Area Category Primary Function Area	Area Controls §130.1(a)	Multi-Level Controls §130.1(b)	Shut-Off Controls §130.1(c)	Primary/Sky lit Daylighting §130.1(d)	Secondary Daylighting §140.6(d)	Interlocked Systems §140.6(a)1	Field Inspector	
								Pass	Fail
CORRIDORS	Corridor	Auth. Personnel	Dimmer	Partial Off*	N/A	N/A	No	☐	☐
STAIR	Stairwell	Auth. Personnel	Bi-level Switch	Occupancy Sensor	N/A	N/A	No	☐	☐
STORAGE	Commercial Industrial Storage Area	Manual ON/OFF	Exempt*	Occupancy Sensor	N/A	N/A	No	☐	☐
PARKING GARAGE	Parking Garage - Parking Area	Auth. Personnel	Bi-level Switch	Partial Off*	N/A	N/A	No	☐	☐
LOBBY	Main Entry Lobby	Auth. Personnel	Dimmer	Exempt*	Included	Included	No	☐	☐
OFFICES	Office (> 250 square feet)	Manual ON/OFF	Dimmer	Occupancy Sensor	N/A	N/A	No	☐	☐

Registration Number: — Generated Date/Time: — Documentation Software: Energy Code Ace

CA Building Energy Efficiency Standards - 2019 Nonresidential Compliance — Report Version: 2019.1.003 Schema Version: rev 20200601 — Compliance ID: 67345 Report Generated: 2022-11-11 15:59:54

STATE OF CALIFORNIA
Indoor Lighting
NRCC-LTI-E — CALIFORNIA ENERGY COMMISSION

CERTIFICATE OF COMPLIANCE		NRCC-LTI-E
Project Name:	Educator Housing 231 Grant Avenue	Report Page: (Page 5 of 9)
Project Address:		Date Prepared: 2022-11-11T18:59:50-05:00

H. INDOOR LIGHTING CONTROLS (Not including PAFs)

COMMUNITY ROOM	Convention, Conference, Multipurpose and Meeting Center	Manual ON/OFF	Dimmer	Occupancy Sensor	Included	Included	No	☐	☐
MECHANICAL ELECTRICAL	Electrical Mechancial Telephone Room	Manual ON/OFF	Exempt*	Exempt*	N/A	N/A	No	☐	☐
LAUNDRY	Laundry Area	Manual ON/OFF	Dimmer	Occupancy Sensor	N/A	N/A	No	☐	☐

*NOTES: Controls with a * require a note in the space below explaining how compliance is achieved.
EX: Conference 1: Primary/Skylight Daylighting: Exempt because less than 120 watts of general lighting; EXCEPTION 1 to §130.1(d)2

13 — Plan Sheet Showing Daylit Zones:

CORRIDORS	[Shut-Off Controls] CORRIDORS TO DIM TO 50% WHEN UNOCCUPIED	E2.01
STORAGE	[Multilevel Controls] Not Required: Space <= 0.5 W/sf	
PARKING GARAGE	[Shut-Off Controls] WHEN UNOCCUPIED, DIM TO 50%	
LOBBY	[Shut-Off Controls] EXCEPTION 1: CONTINUOUS USE 24/7/365	
MECHANICAL ELECTRICAL	[Multilevel Controls] Not Required: Space <= 0.5 W/sf --- (Shut-Off Controls) EXCEPTION 4: ELECTRICAL EQUIPMENT ROOMS.	

I. LIGHTING POWER ALLOWANCE: COMPLETE BUILDING OR AREA CATEGORY METHODS

Each area complying using the Complete Building or Area Category Methods per §140.6(b) are included in this table. Column 06 indicates if additional lighting power allowances per §140.6(c) or adjustments per §140.6(a) are being used .

Conditioned Spaces

01	02	03	04	05	06	
Area Description	Complete Building or Area Category Primary Function Area	Allowed Density (W/ft²)	Area (ft²)	Allowed Wattage (Watts)	Additional Allowance / Adjustment	
					Area Category	PAF
CORRIDORS	Corridor	0.6	1,620	972	No	No
LOBBY	Main Entry Lobby	0.85	960	816	No	No

Registration Number: — Generated Date/Time: — Documentation Software: Energy Code Ace

CA Building Energy Efficiency Standards - 2019 Nonresidential Compliance — Report Version: 2019.1.003 Schema Version: rev 20200601 — Compliance ID: 67345 Report Generated: 2022-11-11 15:59:54

STATE OF CALIFORNIA
Indoor Lighting
NRCC-LTI-E — CALIFORNIA ENERGY COMMISSION

CERTIFICATE OF COMPLIANCE		NRCC-LTI-E
Project Name:	Educator Housing 231 Grant Avenue	Report Page: (Page 6 of 9)
Project Address:		Date Prepared: 2022-11-11T18:59:50-05:00

I. LIGHTING POWER ALLOWANCE: COMPLETE BUILDING OR AREA CATEGORY METHODS

OFFICES	Office (> 250 square feet)	0.65	1,091	709.15	No / No
COMMUNITY ROOM	Convention, Conference, Multipurpose and Meeting Center	0.85	977	830.45	No / No
MECHANICAL ELECTRICAL	Electrical Mechancial Telephone Room	0.4	937	374.8	No / No
LAUNDRY	Laundry Area	0.45	537	241.65	No / No
		TOTALS:	6,122	3,944.05	See Tables J, or P for detail

Unconditioned Spaces

01	02	03	04	05	06	
Area Description	Complete Building or Area Category Primary Function Area	Allowed Density (W/ft²)	Area (ft²)	Allowed Wattage (Watts)	Additional Allowance / Adjustment	
					Area Category	PAF
CORRIDORS	Corridor	0.6	10,488	6,292.8	No	No
STAIR	Stairwell	0.5	2,355	1,177.5	No	No
STORAGE	Commercial Industrial Storage Area	0.6	2,033	1,219.8	No	No
PARKING GARAGE	Parking Garage - Parking Area	0.1	21,124	2,112.4	No	No
MECHANICAL ELECTRICAL	Electrical Mechancial Telephone Room	0.4	2,165	866	No	No
		TOTALS:	38,165	11,668.5	See Tables J, or P for detail	

J. ADDITIONAL ALLOWANCE: AREA CATEGORY METHOD QUALIFYING LIGHTING SYSTEM

This section does not apply to this project.

K. TAILORED METHOD GENERAL LIGHTING POWER ALLOWANCE

This section does not apply to this project.

L. ADDITIONAL LIGHTING ALLOWANCE: TAILORED WALL DISPLAY

This section does not apply to this project.

M. ADDITIONAL LIGHTING ALLOWANCE: TAILORED FLOOR AND TASK LIGHTING

This section does not apply to this project.

Registration Number: — Generated Date/Time: — Documentation Software: Energy Code Ace

CA Building Energy Efficiency Standards - 2019 Nonresidential Compliance — Report Version: 2019.1.003 Schema Version: rev 20200601 — Compliance ID: 67345 Report Generated: 2022-11-11 15:59:54

STATE OF CALIFORNIA
Indoor Lighting
NRCC-LTI-E — CALIFORNIA ENERGY COMMISSION

CERTIFICATE OF COMPLIANCE		NRCC-LTI-E
Project Name:	Educator Housing 231 Grant Avenue	Report Page: (Page 7 of 9)
Project Address:		Date Prepared: 2022-11-11T18:59:50-05:00

N. ADDITIONAL LIGHTING ALLOWANCE: TAILORED ORNAMENTAL/SPECIAL EFFECTS

This section does not apply to this project.

O. ADDITIONAL LIGHTING ALLOWANCE: TAILORED VERY VALUABLE MERCHANDISE

This section does not apply to this project.

P. POWER ADJUSTMENT: LIGHTING CONTROL CREDIT (POWER ADJUSTMENT FACTOR (PAF))

This section does not apply to this project.

Q. RATED POWER REDUCTION COMPLIANCE FOR ALTERATIONS

This section does not apply to this project.

R. 80% LIGHTING POWER FOR ALL ALTERATIONS - CONTROLS EXCEPTIONS

This section does not apply to this project.

S. DAYLIGHT DESIGN POWER ADJUSTMENT FACTOR (PAF)

This section does not apply to this project.

T. DECLARATION OF REQUIRED CERTIFICATES OF INSTALLATION

Selections have been made based on information provided in this document. If any selection have been changed by permit applicant, an explanation should be included in Table E. Additional Remarks. These documents must be provided to the building inspector during construction and can be found online at https://www.energy.ca.gov/title24/2019standards/2019_compliance_documents/Nonresidential_Documents/NRCI/

Form/Title
NRCI-LTI-01-E - Must be submitted for all buildings
NRCI-LTI-02-E- Must be submitted for a lighting control system, or for an Energy Management Control System (EMCS), to be recognized for compliance.

Registration Number: — Generated Date/Time: — Documentation Software: Energy Code Ace

CA Building Energy Efficiency Standards - 2019 Nonresidential Compliance — Report Version: 2019.1.003 Schema Version: rev 20200601 — Compliance ID: 67345 Report Generated: 2022-11-11 15:59:54

STATE OF CALIFORNIA
Indoor Lighting
NRCC-LTI-E — CALIFORNIA ENERGY COMMISSION

CERTIFICATE OF COMPLIANCE		NRCC-LTI-E
Project Name:	Educator Housing 231 Grant Avenue	Report Page: (Page 8 of 9)
Project Address:		Date Prepared: 2022-11-11T18:59:50-05:00

U. DECLARATION OF REQUIRED CERTIFICATES OF ACCEPTANCE

Selections have been made based on information provided in this document. If any selection have been changed by the permit applicant, an explanation should be included in Table E. Additional Remarks. These documents must be provided to the building inspector during construction and any with "-A" in the form name must be completed through an Acceptance Test Technician Certification Provider (ATTCP). For more information visit: http://www.energy.ca.gov/title24/attcp/providers.html

Form/Title	Systems/Spaces To Be Field Verified
NRCA-LTI-02-A - Must be submitted for occupancy sensors and automatic time switch controls.	STAIR; STORAGE; OFFICES; COMMUNITY ROOM; LAUNDRY
NRCA-LTI-03-A - Must be submitted for automatic daylight controls.	LOBBY; COMMUNITY ROOM

Registration Number: — Generated Date/Time: — Documentation Software: Energy Code Ace

CA Building Energy Efficiency Standards - 2019 Nonresidential Compliance — Report Version: 2019.1.003 Schema Version: rev 20200601 — Compliance ID: 67345 Report Generated: 2022-11-11 15:59:54

STATE OF CALIFORNIA
Indoor Lighting
NRCC-LTI-E — CALIFORNIA ENERGY COMMISSION

CERTIFICATE OF COMPLIANCE		NRCC-LTI-E
Project Name:	Educator Housing 231 Grant Avenue	Report Page: (Page 9 of 9)
Project Address:		Date Prepared: 2022-11-11T18:59:50-05:00

DOCUMENTATION AUTHOR'S DECLARATION STATEMENT

I certify that this Certificate of Compliance documentation is accurate and complete.

Documentation Author Name: Kevin Clayton	Documentation Author Signature: Kevin Clayton
Company: Emerald City Engineers	Signature Date: 11/11/2022
Address: 21705 Highway 99	CEA/ HERS Certification Identification (if applicable):
City/State/Zip: Lynnwood, WA 98036	Phone: 425-741-1200

RESPONSIBLE PERSON'S DECLARATION STATEMENT

I certify the following under penalty of perjury, under the laws of the State of California:

1. The information provided on this Certificate of Compliance is true and correct.
2. I am eligible under Division 3 of the Business and Professions Code to accept responsibility for the building design or system design identified on this Certificate of Compliance (responsible designer)
3. The energy features and performance specifications, materials, components, and manufactured devices for the building design or system design identified on this Certificate of Compliance conform to the requirements of Title 24, Part 1 and Part 6 of the California Code of Regulations.
4. The building design features or system design features identified on this Certificate of Compliance are consistent with the information provided on other applicable compliance documents, worksheets, calculations, plans and specifications submitted to the enforcement agency for approval with this building permit application.
5. I will ensure that a completed signed copy of this Certificate of Compliance shall be made available with the building permit(s) issued for the building, and made available to the enforcement agency for all applicable inspections. I understand that a completed signed copy of this Certificate of Compliance is required to be included with the documentation the builder provides to the building owner at occupancy.

Responsible Designer Name: Adam Clayton French P.E.	Responsible Designer Signature:
Company: Emerald City Engineers	Date Signed: 11/11/2022
Address: 21705 Highway 99	License:
City/State/Zip: Lynnwood, WA 98036	Phone: 425-741-1200

Registration Number: — Generated Date/Time: — Documentation Software: Energy Code Ace

CA Building Energy Efficiency Standards - 2019 Nonresidential Compliance — Report Version: 2019.1.003 Schema Version: rev 20200601 — Compliance ID: 67345 Report Generated: 2022-11-11 15:59:54

COPYRIGHT 2023, EMERALD CITY ENGINEERS, INC.
K:\CLAYTON J:\2293-007 231 GRANT, PALO ALTO, CA\DWG\E7.01 T24 ENERGY CODE.DWG 03-17-2023 11:39

VAN METER WILLIAMS POLLACK LLP
ARCHITECTURE | URBAN DESIGN ■ SAN FRANCISCO | DENVER | MINNEAPOLIS
333 Bryant Street, Suite 300, San Francisco, CA 94107 T 415.974.5252

CIVIL ENGINEER
BKF ENGINEERS
1730 N. FIRST ST SUITE 600
SAN JOSE, CA 95112

JOINT TRENCH / DRY UTILITIES
MILLENIUM DESIGN
PO BOX 737
ALAMO, CA 94507

LANDSCAPE ARCHITECT
PLURAL STUDIO
2742 17TH STREET
SAN FRANCISCO, CA 94110

STRUCTURAL ENGINEER
HOHBACH-LEWIN, INC
250 SHERIDAN AVE STE 100
PALO ALTO, CA 94306

MEP ENGINEER
EMERALD CITY ENGINEERS
21705 HIGHWAY 99
LYNWOOD, WA 98036

ENERGY CONSULTANT
REDWOOD ENERGY
1887 Q STREET
ARCATA, CA 95521

EMERALD CITY ENGINEERS, INC
21705 Highway 99
Lynnwood, WA 98036
TEL: 425-741-1200

REGISTERED PROFESSIONAL ENGINEER — ADAM C. FRENCH — E19424 — EXP. 3-31-24 — ELECTRICAL — STATE OF CALIFORNIA
03-20-23

COUNTY OF SANTA CLARA
BUILDING INSPECTION OFFICE
PLANS APPROVED FOR PERMIT
RECORD NO.: DEV22-1242
BY: nickjomes Date: 07/28/2023
HARD COPY OF THESE STAMPED PLANS MUST BE ON THE SITE FOR INSPECTIONS

ID	DATE	NAME
1	11/11/2022	PERMIT CONVENTIONAL
A	12/16/2022	BID SET
B	03/20/2023	BID ADDENDUM
2	03/20/2023	PLAN CHECK RESPONSE 2

Project:

EDUCATOR HOUSING
231 GRANT AVENUE

231 GRANT AVENUE
PALO ALTO, CA 94306

Client:
MERCY HOUSING/
ABODE COMMUNITIES

T24 ENERGY CODE

JOB #: 2293-007
SCALE: AS NOTED

E7.01

PLAN CHECK RESPONSE 2 | DATE: 03/20/2023

STATE OF CALIFORNIA
Outdoor Lighting
NRCC-LTO-E — CALIFORNIA ENERGY COMMISSION

CERTIFICATE OF COMPLIANCE		NRCC-LTO-E
Project Name:	Educator Housing 231 Grant Avenue	Report Page: (Page 1 of 12)
Project Address:		Date Prepared: 2022-11-11T19:09:34-05:00

A. GENERAL INFORMATION

01	Project Location (city)	Palo Alto	04	Total Illuminated Hardscape Area (ft²)	26363
02	Climate Zone	4			
03	Outdoor Lighting Zone per Title 24 Part 1 §10.114 or as designated by Authority Having Jurisdiction (AHJ):				
☐	LZ-0: Very Low - Undeveloped Parkland	☐ LZ-2: Moderate - Rural Areas	☐	LZ-4: High - Must be reviewed by CA Energy Commission for Approval	
☐	LZ-1: Low - Developed Parkland	☒ LZ-3: Moderately High - Urban Areas			

B. PROJECT SCOPE

This table includes outdoor lighting systems that are within the scope of the permit application and are demonstrating compliance using the prescriptive path outlined in §140.7 or §141.0(b)2L for alterations.

My Project Consists of:

01	02
☒ New Lighting System	Must Comply with Allowances from §140.7
☐ Altered Lighting System	Is your alteration increasing the connected lighting load (Watts)? ○ Yes ○ No

03	04	05
% of Existing Luminaires Being Altered[1]	Sum Total of Luminaires Being Added or Altered	Calculation Method
☐ < 10% ☐ >= 10% and < 50% ☐ >= 50%		

Please proceed to Table F. Outdoor Lighting Fixture Schedule to define the project's luminaires.

[1] *FOOTNOTES: % of Existing Luminaires Being Altered = (Sum Total of Luminaires Being Added or Altered / Existing Luminaires within the Scope of the Permit Application) x 100.*

STATE OF CALIFORNIA
Outdoor Lighting
NRCC-LTO-E — CALIFORNIA ENERGY COMMISSION

CERTIFICATE OF COMPLIANCE		NRCC-LTO-E
Project Name:	Educator Housing 231 Grant Avenue	Report Page: (Page 2 of 12)
Project Address:		Date Prepared: 2022-11-11T19:09:34-05:00

C. COMPLIANCE RESULTS

Results in this table are automatically calculated from data input and calculations in Tables F through I. Note: If any cell on this table says "COMPLIES with Exceptional Conditions" refer to Table D. Exceptional Conditions for guidance or see applicable Table referenced below.

Calculations of Total Allowed Lighting Power (Watts) §140.7 or §141.0(b)2L												Compliance Results			
01		02		03		04		05	OR	06	=	07		08	09
General Hardscape Allowance §140.7(d)1 (See Table I)	+	Per Application §140.7(d)2 (See Table J)	+	Sales Frontage §140.7(d)2 (See Table K)	+	Ornamental §140.7(d)2 (See Table L)	+	Per Specific Area §140.7(d)2 (See Table M)		Existing Power Allowance §141.0(b)2L (See Table N)		**Total Allowed** (Watts)	≥	**Total Actual** (Watts)	**07 must be >= 08**
1,920.09	+	855	+	NA	+	342.71	+	410.06	OR	NA	=	3,527.86	≥	3,283	COMPLIES
Cutoff Compliance (See Table G for Details)															N/A
Controls Compliance (See Table H for Details)															COMPLIES with Exceptional Conditions

STATE OF CALIFORNIA
Outdoor Lighting
NRCC-LTO-E — CALIFORNIA ENERGY COMMISSION

CERTIFICATE OF COMPLIANCE		NRCC-LTO-E
Project Name:	Educator Housing 231 Grant Avenue	Report Page: (Page 3 of 12)
Project Address:		Date Prepared: 2022-11-11T19:09:34-05:00

D. EXCEPTIONAL CONDITIONS

This table is auto-filled with uneditable comments because of selections made or data entered in tables throughout the form.

H. Outdoor Lighting Controls Applicant Notes	[COURTYARDS: L5] [Motion Sensor Exemption] EXCEPTION 1: LUMINAIRE WITH MAX RATED WATTAGE OF 40 EACH.
H. Outdoor Lighting Controls Applicant Notes	[COURTYARDS: L6] [Motion Sensor Exemption] EXCEPTION 1: LUMINAIRE WITH MAX RATED WATTAGE OF 40 EACH.
H. Outdoor Lighting Controls Applicant Notes	[COURTYARDS: L7] [Motion Sensor Exemption] EXCEPTION 1: LUMINAIRE WITH MAX RATED WATTAGE OF 40 EACH.
H. Outdoor Lighting Controls Applicant Notes	[COURTYARDS: L8] [Motion Sensor Exemption] EXCEPTION 1: LUMINAIRE WITH MAX RATED WATTAGE OF 40 EACH.
H. Outdoor Lighting Controls Applicant Notes	[COURTYARDS: L9] [Motion Sensor Exemption] EXCEPTION 1: LUMINAIRE WITH MAX RATED WATTAGE OF 40 EACH.
H. Outdoor Lighting Controls Applicant Notes	[COURTYARDS: L10] [Motion Sensor Exemption] EXCEPTION 1: LUMINAIRE WITH MAX RATED WATTAGE OF 40 EACH.
H. Outdoor Lighting Controls Applicant Notes	[COURTYARDS: L11] [Motion Sensor Exemption] EXCEPTION 1: LUMINAIRE WITH MAX RATED WATTAGE OF 40 EACH.
H. Outdoor Lighting Controls Applicant Notes	[BUILDING PERIMETER: E1] [Motion Sensor Exemption] EXCEPTION 1: LUMINAIRE WITH MAX RATED WATTAGE OF 40 EACH.
H. Outdoor Lighting Controls Applicant Notes	[BUILDING PERIMETER: E2] [Motion Sensor Exemption] EXCEPTION 1: LUMINAIRE WITH MAX RATED WATTAGE OF 40 EACH.
H. Outdoor Lighting Controls Applicant Notes	[BUILDING PERIMETER: E4] [Motion Sensor Exemption] EXCEPTION 1: LUMINAIRE WITH MAX RATED WATTAGE OF 40 EACH.

Linear lighting has been indicated on Table F. For these luminaires, wattage reported in F03 is in "W/lf" and Total Number Luminaires reported in F05 indicates total linear feet (lf) of the luminaire type.

E. ADDITIONAL REMARKS

This table includes remarks made by the permit applicant to the Authority Having Jurisdiction.

STATE OF CALIFORNIA
Outdoor Lighting
NRCC-LTO-E — CALIFORNIA ENERGY COMMISSION

CERTIFICATE OF COMPLIANCE		NRCC-LTO-E
Project Name:	Educator Housing 231 Grant Avenue	Report Page: (Page 4 of 12)
Project Address:		Date Prepared: 2022-11-11T19:09:34-05:00

F. OUTDOOR LIGHTING FIXTURE SCHEDULE

For new or altered lighting systems demonstrating compliance with §140.7 all new luminaires being installed and any existing luminaires remaining or being moved within the spaces covered by the permit application are included in the Table below. For altered lighting systems using the Existing Power method per §141.0(b)2L only new luminaires being installed and replacement luminaires being installed as part of the project scope are included (ie, existing luminaires remaining or existing luminaires being moved are not included).

Designed Wattage:

01	02		03	04	05	06	07	08	09	10	
Name or Item Tag	Complete Luminaire Description		Watts per luminaire[1,2]	How is Wattage determined	Total number luminaires[2]	Luminaire Status[3]	Excluded per §140.7(a)	Design Watts	Cutoff Req: > 6,200 initial lumen output §130.2(b)[4]	Field Inspector	
										Pass	Fail
E1	WALL LIGHT	☐ Linear	26.2	Mfr. Spec	21	New	☐	550.2	NA: < 6200 lumens	☐	☐
E2	CEILING SURFACE LIGHT	☐ Linear	10.8	Mfr. Spec	27	New	☐	291.6	NA: < 6200 lumens	☐	☐
E4	WALL LIGHT	☐ Linear	23	Mfr. Spec	33	New	☐	759	NA: < 6200 lumens	☐	☐
L1	LED POLE LIGHT	☐ Linear	46	Mfr. Spec	3	New	☐	138	NA: < 6200 lumens	☐	☐
L4	UNDERBENCH LIGHT	☒ Linear	3	Mfr. Spec	78	New	☐	234	NA: < 6200 lumens	☐	☐
L5	WALL RECESSED LIGHT	☐ Linear	11	Mfr. Spec	9	New	☐	99	NA: < 6200 lumens	☐	☐
L6	CATENARY LIGHT	☐ Linear	10	Mfr. Spec	6	New	☐	60	NA: < 6200 lumens	☐	☐
L7	BOLLARD	☐ Linear	20	Mfr. Spec	13	New	☐	260	NA: < 6200 lumens	☐	☐
L8	BOLLARD	☐ Linear	40	Mfr. Spec	14	New	☐	560	NA: < 6200 lumens	☐	☐
L9	BBQ TASK LIGHT	☐ Linear	7	Mfr. Spec	3	New	☐	21	NA: < 6200 lumens	☐	☐
L10	WALL MOUNT AREA LIGHT	☐ Linear	39	Mfr. Spec	2	New	☐	78	NA: < 6200 lumens	☐	☐

STATE OF CALIFORNIA
Outdoor Lighting
NRCC-LTO-E — CALIFORNIA ENERGY COMMISSION

CERTIFICATE OF COMPLIANCE		NRCC-LTO-E
Project Name:	Educator Housing 231 Grant Avenue	Report Page: (Page 5 of 12)
Project Address:		Date Prepared: 2022-11-11T19:09:34-05:00

F. OUTDOOR LIGHTING FIXTURE SCHEDULE

For new or altered lighting systems demonstrating compliance with §140.7 all new luminaires being installed and any existing luminaires remaining or being moved within the spaces covered by the permit application are included in the Table below. For altered lighting systems using the Existing Power method per §141.0(b)2L only new luminaires being installed and replacement luminaires being installed as part of the project scope are included (ie, existing luminaires remaining or existing luminaires being moved are not included).

Designed Wattage:

01	02		03	04	05	06	07	08	09	10	
L11	CHANNEL LINEAR LED	☒ Linear	4.3	Mfr. Spec	54	New	☐	232.2	NA: < 6200 lumens	☐	☐
							Total Design Watts:	3283			

* NOTES: Selections with a * require a note in the space below explaining how compliance is achieved.
EX: Luminaire is lighting a statue; EXCEPTION 2 to §130.2(b)

[1] *FOOTNOTES: Authority Having Jurisdiction may ask for Luminaire cut sheets to confirm wattage used for compliance per §130.0(c)*
[2] *For linear luminaires, wattage should be indicated as W/lf instead of Watts/luminaire. Total linear feet should be indicated in column 05 instead of number of luminaires.*
[3] *Select "New" for new luminaires in a new outdoor lighting project, or for added luminaires in an alteration. Select "Altered" for replacement luminaires in an alteration. Select "Existing to Remain" for existing luminaires within the project scope that are not being altered and are remaining. Select "Existing Reinstalled" for existing luminaires which are being removed and reinstalled as part of the project scope.*
[4] *Compliance with mandatory cutoff requirements is required for luminaires with initial lumen output >= 6,200 unless exempted by §130.2(b)*

G. CUTOFF REQUIREMENTS (BUG)

This section does not apply to this project.

STATE OF CALIFORNIA
Outdoor Lighting
NRCC-LTO-E — CALIFORNIA ENERGY COMMISSION

CERTIFICATE OF COMPLIANCE		NRCC-LTO-E
Project Name:	Educator Housing 231 Grant Avenue	Report Page: (Page 6 of 12)
Project Address:		Date Prepared: 2022-11-11T19:09:34-05:00

H. OUTDOOR LIGHTING CONTROLS

This table demonstrates compliance with controls requirements for all new or altered luminaires installed as part of the permit application. For alteration projects, luminaires which are existing to remain (ie untouched) and luminaires which are removed and reinstalled (wiring only) do not need to be included in this table even if they are within the spaces covered by the permit application.
*When an option having a * is selected, the notes section of this table must be completed. The lighting controls section of the Compliance Summary Table on the first page will show "DOES NOT COMPLY" if the notes are left blank.*

Mandatory Controls

01	02	03	04	05	
Area Description	Shut-Off §130.2(c)1	Auto-Schedule §130.2(c)2	Motion Sensor §130.2(c)3	Field Inspector	
				Pass	Fail
COURTYARDS: L5	Astronomical Timer	Yes	Exempt*	☐	☐
COURTYARDS: L6	Astronomical Timer	Yes	Exempt*	☐	☐
COURTYARDS: L7	Astronomical Timer	Yes	Exempt*	☐	☐
COURTYARDS: L8	Astronomical Timer	Yes	Exempt*	☐	☐
COURTYARDS: L9	Astronomical Timer	Yes	Exempt*	☐	☐
COURTYARDS: L10	Astronomical Timer	Yes	Exempt*	☐	☐
COURTYARDS: L11	Astronomical Timer	Yes	Exempt*	☐	☐
BUILDING PERIMETER: E1	Astronomical Timer	Yes	Exempt*	☐	☐
BUILDING PERIMETER: E2	Astronomical Timer	Yes	Exempt*	☐	☐
BUILDING PERIMETER: E4	Astronomical Timer	Yes	Exempt*	☐	☐
BUILDING PERIMETER: L1	Astronomical Timer	Yes	Yes	☐	☐

* NOTES: Controls with a * require a note in the space below explaining how compliance is achieved.
EX: Not permitted by health & safety to be turned off; EXCEPTION 1 to §130.2(c)

COURTYARDS: L5	[Motion Sensor Exemption] EXCEPTION 1: LUMINAIRE WITH MAX RATED WATTAGE OF 40 EACH.
COURTYARDS: L6	[Motion Sensor Exemption] EXCEPTION 1: LUMINAIRE WITH MAX RATED WATTAGE OF 40 EACH.
COURTYARDS: L7	[Motion Sensor Exemption] EXCEPTION 1: LUMINAIRE WITH MAX RATED WATTAGE OF 40 EACH.
COURTYARDS: L8	[Motion Sensor Exemption] EXCEPTION 1: LUMINAIRE WITH MAX RATED WATTAGE OF 40 EACH.
COURTYARDS: L9	[Motion Sensor Exemption] EXCEPTION 1: LUMINAIRE WITH MAX RATED WATTAGE OF 40 EACH.

STATE OF CALIFORNIA
Outdoor Lighting
NRCC-LTO-E — CALIFORNIA ENERGY COMMISSION

CERTIFICATE OF COMPLIANCE		NRCC-LTO-E
Project Name:	Educator Housing 231 Grant Avenue	Report Page: (Page 7 of 12)
Project Address:		Date Prepared: 2022-11-11T19:09:34-05:00

H. OUTDOOR LIGHTING CONTROLS

COURTYARDS: L10	[Motion Sensor Exemption] EXCEPTION 1: LUMINAIRE WITH MAX RATED WATTAGE OF 40 EACH.
COURTYARDS: L11	[Motion Sensor Exemption] EXCEPTION 1: LUMINAIRE WITH MAX RATED WATTAGE OF 40 EACH.
BUILDING PERIMETER: E1	[Motion Sensor Exemption] EXCEPTION 1: LUMINAIRE WITH MAX RATED WATTAGE OF 40 EACH.
BUILDING PERIMETER: E2	[Motion Sensor Exemption] EXCEPTION 1: LUMINAIRE WITH MAX RATED WATTAGE OF 40 EACH.
BUILDING PERIMETER: E4	[Motion Sensor Exemption] EXCEPTION 1: LUMINAIRE WITH MAX RATED WATTAGE OF 40 EACH.

I. LIGHTING POWER ALLOWANCE (per §140.7)

This table includes areas using allowance calculations per §140.7. General Hardscape Allowance is per Table 140.7-A while "Use it or lose it" Allowances are per Table 140.7-B . Indicate which allowances are being used to expand sections for user input. Luminaires that qualify for one of the "Use it or lose it" allowances shall not qualify for another "Use it or lose it" allowance.

01				
☒ General Hardscape Allowance Table I (below)	"Use it or lose it" Allowance (select all that apply) (select all that apply)			
	☒ Per Application Table J	☐ Sales Frontage Table K	☒ Ornamental Table L	☒ Per Specific Area Table M

Calculated General Hardscape Lighting Power Allowance per Table 140.7-A (LZ 0, 1 & 4)

This section does not apply to this project.

Calculated General Hardscape Lighting Power Allowance per Table 140.7-A (LZ 2 & 3)

02	03	04	05	06	07	08	09	10
Area Description	Surface Type	Area Wattage Allowance (AWA)			Area Wattage Allowance (AWA)			Total General AWA + LWA (Watts)
		Illuminated Area (ft²)	Allowed Density (W/ft²)	Area Allowance (Watts)	Perimeter Length (lf)	Allowed Density (W/lf)	Linear Allowance (Watts)	
COURTYARDS	Concrete	9560	0.03	286.8	948	0.4	379.2	666
BUILDING PERIMETER	Concrete	16803	0.03	504.09	1000	0.4	400	904.09
							Initial Wattage Allowance for Entire Site (Watts):	350
							Total General Hardscape Allowance (Watts):	1920.09

STATE OF CALIFORNIA
Outdoor Lighting
NRCC-LTO-E — CALIFORNIA ENERGY COMMISSION

CERTIFICATE OF COMPLIANCE		NRCC-LTO-E
Project Name:	Educator Housing 231 Grant Avenue	Report Page: (Page 8 of 12)
Project Address:		Date Prepared: 2022-11-11T19:09:34-05:00

J. LIGHTING ALLOWANCE: PER APPLICATION

This table includes areas using the wattage allowance per application from Table 140.7-B .

01	02	03	04	05	06	07	08	09	10
Area Description	Application per Table 140.7-B[1]	CALCULATED ALLOWANCE (Watts)			DESIGN WATTS				Additional Allowance (Watts)
		# of Locations	Allowance per Location[2]	Extra Allowance (Watts)	Luminaire Name or Item Tag	Watts per Luminaire	# of Luminaires	Design Watts	
ENTRIES	Building Entrance/Exit	45	19	855	E2	10.8	26	280.8	855
					E1	26.2	15	393	
					E4	23	13	299	
							Total Design Watts for this Area:	972.8	
							Total Allowance (Watts) All Areas:		855

[1] *FOOTNOTES: Primary entrance applications are only available for senior care facilities, healthcare facilities, police stations, hospitals, fire stations, and emergency vehicle facilities.*
[2] *The Allowance per Location for ATMs is 100W for the first ATM and 35W for each additional per Table 140.7-B .*
[3] *For luminaires indicated in Table F as linear, wattage in column 07 is W/lf instead of Watts/luminaire. Total linear feet should be indicated in column 08 instead of number of luminaires.*

K. LIGHTING ALLOWANCE: SALES FRONTAGE

This section does not apply to this project.

STATE OF CALIFORNIA
Outdoor Lighting
NRCC-LTO-E — CALIFORNIA ENERGY COMMISSION

CERTIFICATE OF COMPLIANCE		NRCC-LTO-E
Project Name:	Educator Housing 231 Grant Avenue	Report Page: (Page 9 of 12)
Project Address:		Date Prepared: 2022-11-11T19:09:34-05:00

L. LIGHTING ALLOWANCE: ORNAMENTAL

This table includes all ornamental luminaires within the scope of the permit application to calculate the allowance per Table-140.7-B.

01	02	03	04	05	06	07	08	09
Area Description	CALCULATED ALLOWANCE(Watts)			DESIGN WATTS				Additional Allowance (Watts)
	Illuminated Area (ft²)	Allowed Density (W/ft²)	Extra Allowance (Watts)	Luminaire Name or Item Tag	Watts per Luminaire[1]	# of Luminaires	Design Watts	
Total Illuminated Hardscape Area for Site	26,363	0.01	342.71	L9	7	3	21	342.71
				L11	4.3	54	232.2	
				L4	3	78	234	
							Total Design Watts for this Area:	487.2	
							Total Allowance (Watts) Ornamental:	342.71

[1] *FOOTNOTES: Luminaires qualifying for this allowance shall be rated <= 100W and shall be post-top luminaires, lanterns, pendants or chandeliers.*
[2] *For luminaires indicated in Table F as linear, wattage in column 06 is W/lf instead of Watts/luminaire. Total linear feet should be indicated in column 07 instead of number of luminaires.*

STATE OF CALIFORNIA
Outdoor Lighting
NRCC-LTO-E — CALIFORNIA ENERGY COMMISSION

CERTIFICATE OF COMPLIANCE		NRCC-LTO-E
Project Name:	Educator Housing 231 Grant Avenue	Report Page: (Page 10 of 12)
Project Address:		Date Prepared: 2022-11-11T19:09:34-05:00

M. LIGHTING ALLOWANCE: PER SPECIFIC AREA

This table includes areas using the wattage allowance per specific area from Table 140.7-B . More than one specific area allowance may be taken in a single project, if applicable. However, multiple specific area allowances may not be taken for the exact same area on the site.

01	02	03	04	05	06	07	08	09	10
Area Description	Specific Area Type per Table 140.7-B	CALCULATED ALLOWANCE (Watts)			DESIGN WATTS				Additional Allowance (Watts)
		Specific Area (ft²)[1]	Allowed Density (W/ft²)	Extra Allowance (Watts)	Luminaire Name or Item Tag	Watts per Luminaire	# of Luminaires	Design Watts	
BBQ AREAS	OutdoorDining	1030	0.05	51.5	L5	11	9	99	51.5
					L6	10	6	60	
							Total Design Watts for this Area:	159	
CANOPIES	NonSalesCanopy	1328	0.27	358.56	E1	26.2	13	340.6	358.56
					E2	10.8	25	270	
							Total Design Watts for this Area:	610.6	
							Total Allowance (Watts) All Areas:		410.06

[1] *FOOTNOTES: See Table 140.7-B for rules for calculating the specific areas (ft² for these additional lighting allowances.*
[2] *For luminaires indicated in Table F as linear, wattage in column 07 is W/lf instead of Watts/luminaire. Total linear feet should be indicated in column 08 instead of number of luminaires.*

N. EXISTING CONDITIONS POWER ALLOWANCE (alterations only)

This section does not apply to this project.

STATE OF CALIFORNIA
Outdoor Lighting
NRCC-LTO-E — CALIFORNIA ENERGY COMMISSION

CERTIFICATE OF COMPLIANCE		NRCC-LTO-E
Project Name:	Educator Housing 231 Grant Avenue	Report Page: (Page 11 of 12)
Project Address:		Date Prepared: 2022-11-11T19:09:34-05:00

O. DECLARATION OF REQUIRED CERTIFICATES OF INSTALLATION

Selections have been made based on information provided in this document. If any selection have been changed by permit applicant, an explanation should be included in Table E. Additional Remarks. These documents must be provided to the building inspector during construction and can be found online at https://www.energy.ca.gov/title24/2019standards/2019_compliance_documents/Nonresidential_Documents/NRCI/

Form/Title
NRCI-LTO-01-E - Must be submitted for all buildings
NRCI-LTO-02-E- Must be submitted for a lighting control system, or for an Energy Management Control System (EMCS), to be recognized for compliance.

P. DECLARATION OF REQUIRED CERTIFICATES OF ACCEPTANCE

Selections have been made based on information provided in this document. If any selection have been changed by permit applicant, an explanation should be included in Table E. Additional Remarks. These documents must be provided to the building inspector during construction and must be completed through an Acceptance Test Technician Certification Provider (ATTCP). For more information visit: http://www.energy.ca.gov/title24/attcp/providers.html

Form/Title	Systems/Spaces To Be Field Verified
NRCA-LTO-02-A - Must be submitted for all outdoor lighting controls except for alterations where controls are added to <= 20 luminaires.	COURTYARDS: L5; COURTYARDS: L6; COURTYARDS: L7; COURTYARDS: L8; COURTYARDS: L9; COURTYARDS: L10; COURTYARDS: L11; BUILDING PERIMETER: E1; BUILDING PERIMETER: E2; BUILDING PERIMETER: E4; BUILDING PERIMETER: L1

STATE OF CALIFORNIA
Outdoor Lighting
NRCC-LTO-E — CALIFORNIA ENERGY COMMISSION

CERTIFICATE OF COMPLIANCE		NRCC-LTO-E
Project Name:	Educator Housing 231 Grant Avenue	Report Page: (Page 12 of 12)
Project Address:		Date Prepared: 2022-11-11T19:09:34-05:00

DOCUMENTATION AUTHOR'S DECLARATION STATEMENT

I certify that this Certificate of Compliance documentation is accurate and complete.

Documentation Author Name: Kevin Clayton	Documentation Author Signature: Kevin Clayton
Company: Emerald City Engineers	Signature Date: 11/11/2022
Address: 21705 Highway 99	CEA/ HERS Certification Identification (if applicable):
City/State/Zip: Lynnwood, WA 98036	Phone: 425-741-1200

RESPONSIBLE PERSON'S DECLARATION STATEMENT

I certify the following under penalty of perjury, under the laws of the State of California:

1. The information provided on this Certificate of Compliance is true and correct.
2. I am eligible under Division 3 of the Business and Professions Code to accept responsibility for the building design or system design identified on this Certificate of Compliance (responsible designer)
3. The energy features and performance specifications, materials, components, and manufactured devices for the building design or system design identified on this Certificate of Compliance conform to the requirements of Title 24, Part 1 and Part 6 of the California Code of Regulations.
4. The building design features or system design features identified on this Certificate of Compliance are consistent with the information provided on other applicable compliance documents, worksheets, calculations, plans and specifications submitted to the enforcement agency for approval with this building permit application.
5. I will ensure that a completed signed copy of this Certificate of Compliance shall be made available with the building permit(s) issued for the building, and made available to the enforcement agency for all applicable inspections. I understand that a completed signed copy of this Certificate of Compliance is required to be included with the documentation the builder provides to the building owner at occupancy.

Responsible Designer Name: Adam Clayton French P.E.	Responsible Designer Signature:
Company: Emerald City Engineers	Date Signed: 11/11/2022
Address: 21705 Highway 99	License:
City/State/Zip: Lynnwood, WA 98036	Phone: 425-741-1200

COPYRIGHT 2023, EMERALD CITY ENGINEERS, INC.
K:\LAYTON J\2293-007 231 GRANT, PALO ALTO, CA\DWG\E702 T24 ENERGY CODE.DWG 03-17-2023 11:39

VAN METER WILLIAMS POLLACK LLP
ARCHITECTURE | URBAN DESIGN ■ SAN FRANCISCO | DENVER | MINNEAPOLIS
333 Bryant Street, Suite 300, San Francisco, CA 94107 T 415.974.5252

CIVIL ENGINEER
BKF ENGINEERS
1730 N. FIRST ST SUITE 600
SAN JOSE, CA 95112

JOINT TRENCH / DRY UTILITIES
MILLENIUM DESIGN
PO BOX 737
ALAMO, CA 94507

LANDSCAPE ARCHITECT
PLURAL STUDIO
2742 17TH STREET
SAN FRANCISCO, CA 94110

STRUCTURAL ENGINEER
HOHBACH-LEWIN, INC
250 SHERIDAN AVE STE 100
PALO ALTO, CA 94306

MEP ENGINEER
EMERALD CITY ENGINEERS
21705 HIGHWAY 99
LYNWOOD, WA 98036

ENERGY CONSULTANT
REDWOOD ENERGY
1887 Q STREET
ARCATA, CA 95521

EMERALD CITY ENGINEERS, INC
21705 Highway 99
Lynnwood, WA 98036
TEL: 425-741-1200

REGISTERED PROFESSIONAL ENGINEER — ADAM C. FRENCH — 25942 — EXP. 3-31-24 — STATE OF CALIFORNIA — ELECTRICAL
03-20-23

COUNTY OF SANTA CLARA
BUILDING INSPECTION OFFICE
PLANS APPROVED FOR PERMIT
RECORD NO.: DEV22-1242
BY: rick.gomes Date: 07/28/2023
HARD COPY OF THESE STAMPED PLANS MUST BE ON THE SITE FOR INSPECTIONS

ID	DATE	NAME
1	11/11/2022	PERMIT CONVENTIONAL
A	12/16/2022	BID SET
B	03/20/2023	BID ADDENDUM
2	03/20/2023	PLAN CHECK RESPONSE 2

Project:

EDUCATOR HOUSING 231 GRANT AVENUE

231 GRANT AVENUE
PALO ALTO, CA 94306

Client:
mercy HOUSING
abode communities
MERCY HOUSING/
ABODE COMMUNITIES

T24 ENERGY CODE

JOB #: 2293-007
SCALE: AS NOTED

E7.02

PLAN CHECK RESPONSE 2 | DATE: 03/20/2023

STATE OF CALIFORNIA
Solar Ready Areas
NRCC-SRA-E
CALIFORNIA ENERGY COMMISSION

CERTIFICATE OF COMPLIANCE			NRCC-SRA-E
Project Name:	Educator Housing 231 Grant Avenue	Report Page:	(Page 1 of 4)
Project Address:		Date Prepared:	2022-11-11T19:11:18-05:00

This document is used to demonstrate compliance with mandatory requirements in §110.10 for newly constructed buildings which are either high-rise multifamily ten stories or fewer, hotel/motel ten stories or fewer or all other nonresidential buildings three sotires or fewer. It is also used to demonstrate compliance with additions to these building types which add more than 2,000 ft² of roof area. Alterations or additions of less than 2,000 ft² are not required to comply with §110.10.

A. GENERAL INFORMATION

01	Project Location (city)	Palo Alto	04	Building Type	High-rise mulltifamily 10 stories or fewer
02	Climate Zone	4	05	Construction Type	Addition/ Alteration increases roof area 2,000 ft2
03	☐ Roof is designed for vehicle traffic, parking or for heliport				
03a	Plan sheet showing roof design for vehicle traffic, parking or heliport exception:				

B. PROJECT SCOPE

The compliance path the project is using to comply per §110.10(b)1B is indicated below.

My project consists of (check one):

1

☐	Provide Solar Ready Area no exceptions	The project has allocated a solar zone on the roof plan per requirements in §110.10(b), as documented in Table F.
☒	Exception to Solar Ready Area: Installed Solar Photovoltaic System	The project includes a permanently installed solar electric system having a nameplate DC power rating, measured under Standard Test Conditions, of no less than one watt per square foot of roof area as documented in Table G.
☐	Exception to Solar Ready Area: Installed Solar Water Heating System	The project is a hotel/motel or high-rise multifamily occupancy and includes a permanently installed domestic solar water-heating system complying with §150.1(c)8Biii and Reference Residential Appendix RA4, as documented in Table H.
☐	Exception to Solar Ready Area: Smart Thermostat and Alternative Energy Efficiency Measure	The project is a high-rise multifamily occupancy where all thermostats in each dwelling unit comply with §110.12(a) AND at least one additional measure listed in Exception 4 to §110.10(b)1B is installed, as documented in Table I.

STATE OF CALIFORNIA
Solar Ready Areas
NRCC-SRA-E
CALIFORNIA ENERGY COMMISSION

CERTIFICATE OF COMPLIANCE			NRCC-SRA-E
Project Name:	Educator Housing 231 Grant Avenue	Report Page:	(Page 2 of 4)
Project Address:		Date Prepared:	2022-11-11T19:11:18-05:00

C. COMPLIANCE RESULTS

Results in this table are automatically calculated from data input and calculations in Tables F through I. Note: If any cell on this table says "DOES NOT COMPLY" or "COMPLIES with Exceptional Conditions" refer to Table D. for guidance or see the applicable Table referenced below.

Allocated Solar Zone			Installed PV System			Installed SWH System			Smart Tstat and Alternative EE Measure		
01	02		03	04		05	06		07	08	09
Required Minimum Area (ft²)	Designated Area (ft²)	OR	Required Minimum DC Power Rating (Watts)	Designed DC Power Rating (Watts)	OR	Required Minimum Solar Savings Fraction	Designed/Rated Solar Savings Fraction	OR	JA5 Compliant Thermostat Specified?	Alternative Energy Efficiency Measure	
(See Table F)			(See Table G)			(See Table H)			(See Table I)		COMPLIES
		OR	26278	141480	OR			OR			
Location within the construction documents showing the location for inverters and metering equipment and a pathway for the routing of conduit/plumbing to the electrical service/ water heating system per §110.10(c).											

D. EXCEPTIONAL CONDITIONS

This table is auto-filled with uneditable comments because of selections made or data entered in tables throughout the form.

Table F indicates a subarea that is not in compliance with the requirements. Please revisit Table F

E. ADDITIONAL REMARKS

This table is includes remarks made by the permit applicant to the Authority Having Jurisdiction.

F. ALLOCATED SOLAR ZONE

This section does not apply to this project.

Registration Number:
CA Building Energy Efficiency Standards - 2019 Nonresidential Compliance
Generated Date/Time:
Report Version: 2019.1.003
Schema Version: rev 20200601
Documentation Software: Energy Code Ace
Compliance ID: 67345
Report Generated: 2022-11-11 16:11:22

STATE OF CALIFORNIA
Solar Ready Areas
NRCC-SRA-E
CALIFORNIA ENERGY COMMISSION

CERTIFICATE OF COMPLIANCE			NRCC-SRA-E
Project Name:	Educator Housing 231 Grant Avenue	Report Page:	(Page 3 of 4)
Project Address:		Date Prepared:	2022-11-11T19:11:18-05:00

G. PERMANENTLY INSTALLED SOLAR PHOTOVOLTAIC (PV) SYSTEM

This table is completed if the project is installing a PV system to comply with §110.10(b)1B Exception 1.

01	02	03	04	05	
Total Roof Area[1] (ft²)	Required Minimum DC Power Rating (Watts)	Designed System DC Power Rating (Watts)	Location in Construction Documents showing PV System/ Components	Field Inspector	
				Pass	Fail
26278	26278	141480	PV-3	☐	☐

[1] *FOOTNOTES: Newly Constructed Projects should report total roof areas; Additions should report newly added roof area.*

H. PERMANENTLY INSTALLED SOLAR HOT WATER SYSTEMS

This section does not apply to this project.

I. SMART THERMOSTATS AND ALTERNATIVE EFFICIENCY MEASURE

This section does not apply to this project.

J. DECLARATION OF REQUIRED CERTIFICATES OF INSTALLATION

Selections have been made based on information provided in this document. If any selections have been changed by the permit applicant, an explanation should be included Table E. Additional Remarks. These documents must be provided to the building inspector during construction and can be found online at https://www.energy.ca.gov/title24/2019standards/2019_compliance_documents/Nonresidential_Documents/NRCI/

Form/Title

NRCI-SPV-01-E - Must be submitted for all newly installed Photovoltaic Systems (PV) being used to comply with §110.10(b)1B for high-rise multifamily, Hotel/Motel buildings less than 10 stories and nonresidential buildings less than 4 stories.

K. DECLARATION OF REQUIRED CERTIFICATES OF ACCEPTANCE

There are no Certificates of Acceptance applicable to solar ready requirements.

Registration Number:
CA Building Energy Efficiency Standards - 2019 Nonresidential Compliance
Generated Date/Time:
Report Version: 2019.1.003
Schema Version: rev 20200601
Documentation Software: Energy Code Ace
Compliance ID: 67345
Report Generated: 2022-11-11 16:11:22

STATE OF CALIFORNIA
Solar Ready Areas
NRCC-SRA-E
CALIFORNIA ENERGY COMMISSION

CERTIFICATE OF COMPLIANCE			NRCC-SRA-E
Project Name:	Educator Housing 231 Grant Avenue	Report Page:	(Page 4 of 4)
Project Address:		Date Prepared:	2022-11-11T19:11:18-05:00

DOCUMENTATION AUTHOR'S DECLARATION STATEMENT

I certify that this Certificate of Compliance documentation is accurate and complete.

Documentation Author Name: Kevin Clayton	Documentation Author Signature: Kevin Clayton
Company: Emerald City Engineers	Signature Date: 11/11/2022
Address: 21705 Highway 99	CEA/ HERS Certification Identification (if applicable):
City/State/Zip: Lynnwood, WA 98036	Phone: 425-741-1200

RESPONSIBLE PERSON'S DECLARATION STATEMENT

I certify the following under penalty of perjury, under the laws of the State of California:

1. The information provided on this Certificate of Compliance is true and correct.
2. I am eligible under Division 3 of the Business and Professions Code to accept responsibility for the building design or system design identified on this Certificate of Compliance (responsible designer)
3. The energy features and performance specifications, materials, components, and manufactured devices for the building design or system design identified on this Certificate of Compliance conform to the requirements of Title 24, Part 1 and Part 6 of the California Code of Regulations.
4. The building design features or system design features identified on this Certificate of Compliance are consistent with the information provided on other applicable compliance documents, worksheets, calculations, plans and specifications submitted to the enforcement agency for approval with this building permit application.
5. I will ensure that a completed signed copy of this Certificate of Compliance shall be made available with the building permit(s) issued for the building, and made available to the enforcement agency for all applicable inspections. I understand that a completed signed copy of this Certificate of Compliance is required to be included with the documentation the builder provides to the building owner at occupancy.

Responsible Designer Name: Adam Clayton French P.E.	Responsible Designer Signature:
Company: Emerald City Engineers	Date Signed: 11/11/2022
Address: 21705 Highway 99	License:
City/State/Zip: Lynnwood, WA 98036	Phone: 425-741-1200

Registration Number:
CA Building Energy Efficiency Standards - 2019 Nonresidential Compliance
Generated Date/Time:
Report Version: 2019.1.003
Schema Version: rev 20200601
Documentation Software: Energy Code Ace
Compliance ID: 67345
Report Generated: 2022-11-11 16:11:22

COPYRIGHT 2023, EMERALD CITY ENGINEERS, INC.
K:\LAYTON A\2293-007 231 GRANT, PALO ALTO, CA\DWG\T03 T24 ENERGY CODE.DWG 03-17-2023 11:39

VAN METER WILLIAMS POLLACK LLP
ARCHITECTURE | URBAN DESIGN ■ SAN FRANCISCO | DENVER | MINNEAPOLIS
333 Bryant Street, Suite 300, San Francisco, CA 94107 T 415.974.5252

☐ CIVIL ENGINEER
BKF ENGINEERS
1730 N. FIRST ST SUITE 600
SAN JOSE, CA 95112

☐ JOINT TRENCH / DRY UTILITIES
MILLENIUM DESIGN
PO BOX 737
ALAMO, CA 94507

☐ LANDSCAPE ARCHITECT
PLURAL STUDIO
2742 17TH STREET
SAN FRANCISCO, CA 94110

☐ STRUCTURAL ENGINEER
HOHBACH-LEWIN, INC
250 SHERIDAN AVE STE 100
PALO ALTO, CA 94306

☐ MEP ENGINEER
EMERALD CITY ENGINEERS
21705 HIGHWAY 99
LYNWOOD, WA 98036

☐ ENERGY CONSULTANT
REDWOOD ENERGY
1887 Q STREET
ARCATA, CA 95521

EMERALD CITY ENGINEERS, INC
21705 Highway 99
Lynnwood, WA 98036
TEL: 425-741-1200

REGISTERED PROFESSIONAL ENGINEER — ADAM C. FRENCH — 23942 — EXP. 3-31-24 — ELECTRICAL — STATE OF CALIFORNIA

03-20-23

COUNTY OF SANTA CLARA
BUILDING INSPECTION OFFICE
PLANS APPROVED FOR PERMIT

RECORD NO.: DEV22-1242

BY: rick.gomes Date: 07/28/2023

HARD COPY OF THESE STAMPED PLANS MUST BE ON THE SITE FOR INSPECTIONS

ID	DATE	NAME
1	11/11/2022	PERMIT CONVENTIONAL
A	12/16/2022	BID SET
B	03/20/2023	BID ADDENDUM
2	03/20/2023	PLAN CHECK RESPONSE 2

Project:

EDUCATOR HOUSING
231 GRANT AVENUE

231 GRANT AVENUE
PALO ALTO, CA 94306

Client:
MERCY HOUSING/
ABODE COMMUNITIES

T24 ENERGY CODE

JOB #: 2293-007
SCALE: AS NOTED

E7.03

PLAN CHECK RESPONSE 2 | DATE: 03/20/2023