PROJECT INFORMATION

APN	544-23-041
ZONING	HS-Sr
OCCUPANCY GROUP	R3 & U (Per 2022 CRC)
CONSTRUCTION TYPE	Modified Fire Resistive (IBC Type I-B), sprinklered
LOT NUMBER	23
TRACT NUMBER	42
SANTA CLARA COUNTY DISTRICT	1
PROJECT DESCRIPTION	One of three proposed SFR's on subdivision consisting of APN544-23-040, -041 and -042 at 20245 Gist Rd, Los Gatos, CA 95033. The proposed home is a new two-story 4 beds, 4 baths 5,427 sq. ft. gross area single-family residence with 2,651 sq. ft. of habitable space, a 506 sq. ft. attached two-car garage with two EV L1 spaces, a covered courtyard, a 376 sq. ft. gym & sauna, having 1,892 sq. ft. landscaped areas.
FIRE PROTECTION DISTRICT	Santa Clara County Central Fire Protection District (CCFD)
WATER DISTRICT	Santa Clara Valley Water District #7, private water well

HAZARDS AND CONSTRAINTS

STATE RESPONSE AREA	SRA 100%
FEMA FLOOD ZONE	ZONE D
WILDLAND-URBAN INTERFACE	In WUI, must comply with WUI Code, CRC R337
COUNTY FAULT LINE RUPTURE HAZARD ZONE	Not in county fault line rupture hazard zone
COUNTY LANDSLIDE HAZARD ZONE	In county landslide zone
STATE SEISMIC HAZARD ZONE	In state seismic hazard zone

CONSULTANTS

ARCHITECTS & ENGINEERING
S3DA Structural & Architectural Design
111 Deerwood Road, Suite 200, San Ramon, CA 94583
(619) 404-0220
Nader Moavenian
nader.m@s3da-design.com
Barett C. Crook, PE

CIVIL ENGINEERING
DRP Enterprises LLC
Daniel Patneaude, PE
206-734-7765
Joanne Singer, PE
760-625-7426
PO Box 4428
Palm Springs, CA 92263

SURVEYORS
MH Engineering
16075 Vineyard Blvd.
Morgan Hill, CA 95037
tel: (408) 779-7381
fax: (408) 226-5712
Allen Andrade, PE
allena@mhengineering.com

GEOTECHNICAL ENGINEERING
Modern Technology Inc
2076 16th Avenue San Francisco CA 94116
tel: (415) 602-2290
Igor Kleiner, PE
tesr@earthlink.net

NOTE: project must conform to geotechnical soils report recommendations

WASTEWATER
Christopher Day Environmental Health Consulting
P.O. Box 26
Redwood City, CA 94064
tel: (650) 293-1045
Christopher Day, R.E.H.S.
christopherday@aol.com

CODE COMPLIANCE

This residential construction complies with Title 24 and the following codes:

2022 California Residential Code (CRC)
2022 California Building Code (CBC)
2022 California Mechanical Code (CMC)
2022 California Plumbing Code (CPC)
2022 California Electrical Code (CEC)
2022 California Energy Code (CEnC)
Santa Clara County Zoning Ordinance (SCC Ordinance)

APN544-23-041 lot area	41,381 ft2
Building footprint	3968 ft2
Percentage of the lot covered by buildings	9.59%

Ground floor	**Area**
Guest bedroom	206 ft2
Wine cellar	51 ft2
Guest bathroom	49 ft2
Laundry	62 ft2
Corridor	100 ft2
Living room	390 ft2
Kitchen & Dining	508 ft2
Foyer	194 ft2
Mechanical room	133 ft2
Attached garage	506 ft2
Total ground floor area	2197 ft2

Gym & Sauna	
Gym	196 ft2
Sauna	180 ft2
Total Gym & Sauna	376 ft2

Covered courtyard	**549 ft2**
Total covered courtyard area	549 ft2

Second floor	
Family room	549 ft2
Hallway	343 ft2
Master bedroom	400 ft2
Master bathroom	195 ft2
Walk-in closet	79 ft2
Laundry	33 ft2
Luke's bedroom	297 ft2
Luke's bathroom	60 ft2
Regina's bedroom	301 ft2
Regina's bathroom	60 ft2
Total second floor area	2303 ft2
Gross Floor Area	**5427 ft2**

AREA SUMMARIES

Habitable space	
Guest bedroom	206 ft2
Living room	390 ft2
Kitchen & Dining	508 ft2
Family room	549 ft2
Master bedroom	400 ft2
Luke's bedroom	297 ft2
Regina's bedroom	301 ft2
Total habitable space area	2651 ft2

Decks & Balconies	
Bedroom sundeck	229 ft2
Master sundeck	520 ft2
Total decks & balconies area	749 ft2

Other	
Wine cellar	51 ft2
Guest bathroom	49 ft2
Laundry	62 ft2
Corridor	100 ft2
Foyer	194 ft2
Mechanical room	133 ft2
Hallway	329 ft2
Master bathroom	195 ft2
Walk-in closet	79 ft2
Laundry	33 ft2
Luke's bathroom	60 ft2
Regina's bathroom	60 ft2
Total other area	1345 ft2

Attached garage	**506 ft2**
Total garage area	506 ft2

All measurements to the outside rough surface of enclosing walls or to centerline of walls between rooms where applicable; covered courtyard measured to edges of vertical projection of the floor & deck above per SCC Ordinance §1.30.030

LANDSCAPED AREAS

Landscaped area per plan	**Area**
Manzanita rockery	167 ft2
Butterfly garden	395 ft2
Colibri garden	272 ft2
Grass hill	384 ft2
Camellia terrace	608 ft2
Hostas bed	66 ft2
Total	1892 ft2

FENESTRATION & GLAZING NOTES

Use Class B or higher glazing on all windows and bi-fold doors. Use fully tempered glass with optional safety film lamination.

FIRE NOTES

1. These plans comply with 2022 California Building Code, 2022 California Fire code and district amendments.
2. Occupancy R-3 & U, type I-B, fully sprinkled. Approved automatic system complying with the edition of NFPA 13D currently adopted in Chapter 35 of the California Building Code is required.
3. The designer/installer must submit two sets of plans, calculations and cut sheets for the underground and overhead residential automatic sprinkler system to the central fire protection district.
4. Address numbers must be posted and maintained as shown on the site plan. Numbers must be a minimum of 4 inches in height and of a color contrasting to their background.
5. Roof coverings must be Class A.
6. Job copies of the building plans and permits must remain on-site during inspections.
7. All significant combustible vegetation must be removed within 30 feet of the structure to minimize risk of wildfire casualty. Appropriate separation of vegetative fuels must be maintained in areas between 30 and 100 feet from the structure.
8. Any electric gates must be equipped with the county fire protection district key entry system.
9. All vent openings to be covered by Wildland Flame and Ember Resistant vents approved and listed by the California State Fire Marshal, or WUI vents listed to ASTM E2886 per Section R337.6.2.
10. Roof gutters to be provided with leaf guards per Section R337.5.4.
11. Underside of the roof eaves is to be finished with an ignition resistant or non-combustible material to comply with WUI requirements of Section R337.7.

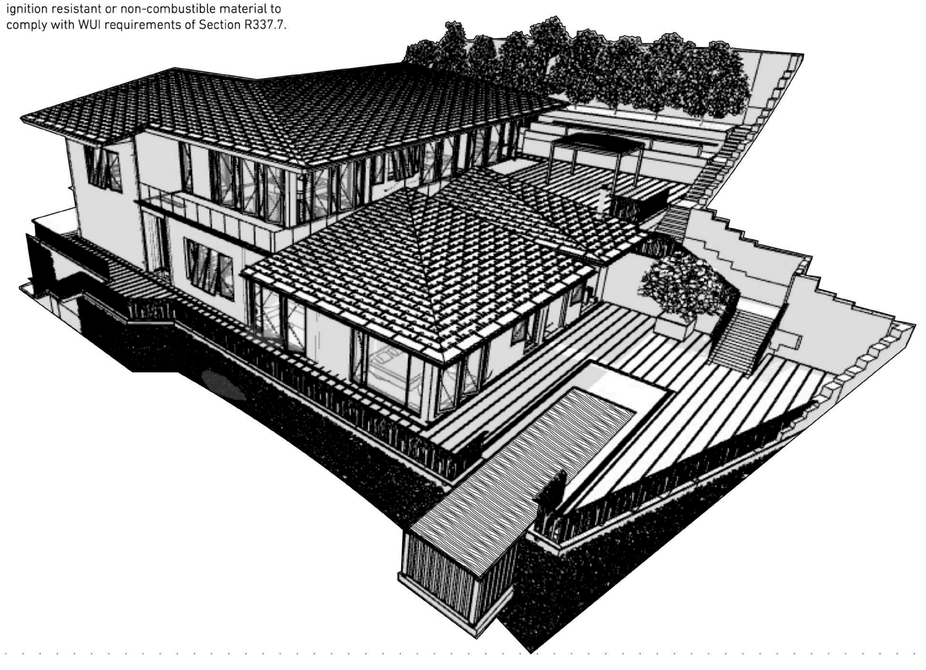

VICINITY MAP

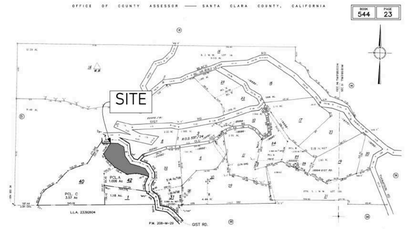

ASSESSOR'S PARCEL MAP

Sheet Index Layout ID	Layout Name
H1 A	000 SFR1 Cover Sheet
H1 A-1	001 SFR1 1/4" ground floor plan
H1 A-2	002 SFR1 1/4" Second floor plan
H1 A-3	003 SFR1 1/4" West elevation
H1 A-4	004 SFR1 1/4" East elevation
H1 A-5	005 SFR1 1/4" North elevation
H1 A-6	006 SFR1 1/4" South elevation
H1 A-7	007 SFR1 1/4" courtyard, gym & sauna elevations
H1 A-8	008 SFR1 Architectural sections
H1 A-9	009 SFR1 Architectural sections
C-0	010 Civil. Cover sheet
C-1	011 Subdivision site plan. Existing features
C-1.1	012 APN544-23-041 site plan. Existing features
C-2	013 Subdivision site plan. Proposed developments
C-2.1	014 APN544-23-041 site plan. Proposed developments
C-3	015 Fire protection measures & infrastructure
C-4-SD16	016 Fire turnaround per SD-16 for APN 544-23-041
C-4.1-SD16	017 Fire turnaround per SD-16 for APN544-23-040
C-5-GR	018 Grading plan
C-6-GR	019 Grading. Common access road profile
C-7-GR	020 Grading. SFR1 Driveway profile.
C-8-GR	021 Grading. Water well path
C-9	022 Subdivision site plan - drawings layout
C-10	023 Subdivision site plan
C-11	024 Subdivision site plan
C-12	025 Subdivision site plan
C-13	026 Subdivision site plan
C-14	027 Subdivision site plan
C-15-DR	028 Drainage plan
C-16-DR	029 Drainage plan
C-17-DR	030 Drainage plan
C-18-DR	031 Drainage plan
C-19-DR	032 Drainage plan
C-20-DR	033 Drainage plan
C-21-RW	034 Retaining walls. Locations
C-22-RW	035 Retaining walls estimated height elevations
C-23-RW	036 Retaining walls along common access driveway
C-25-RW	037 Retaining wall: common access driveway wall
C-24-RW	038 RW 11 and RW7 curved. APN544-23-041
C-26-RW	039 Wall map. Grading APN544-23-042
C-27-RW	040 Retaining wall sections
H1-OWTS-1	041 Drip dispersal septic. APN 544-23-041
H1-OWTS-2	042 Septic: details, installation.
H1-OWTS-3	043 Calcs, perc & soil tests. 544-23-041
H2-OWTS-1	044 SFR2. Drip dispersal septic. APN 544-23-042
H2-OWTS-2	045 SFR2 Septic: details, installation. 544-23-042
H2-OWTS-3	046 SFR2 Calcs, perc and soil tests. 544-23-042
H2-OWTS-4	047 SFR2 General site plan. 544-23-042
L-1	048 Landscaping architecture notes
L-2	049 Existing trees
L-3	050 Tree preservation plan
L-4	051 Replacement trees
L-5	052 Planters
L-6	053 Landscaped areas
L-7	054 Manzanitas rockery
L-8	055 Butterfly garden
L-9	056 Hostas, camellias, grasses
L-10	057 SFR2. Terraces
L-D-1	058 Oak Forest railing panels
L-D-2	059 Moon Gate details
MEP-01	060 Storm water collection system
MEP-01.D	061 Storm water system. Detail
MEP-02	062 Storm water collection system plan.
MEP-03	063 DWV. Waste water. underground. Axonometric view
MEP-04	064 DWV. Waste water. Internal plumbing plan. Ground floor
MEP-05	065 DWV. Waste water. Internal plumbing plan. 2nd floor
MEP-06	066 DWV. Waste water. Interior plumbing. Axonometry
MEP-27	067 Interior electrical plan. Ground floor
MEP-28	068 Interior electrical plan. 2nd floor
MEP-29	069 Exterior electrical plan
MEP-30	070 Exterior electrical plan. 2nd floor
MEP-07	071 Bz. Sprinkler system plan. Ground floor
MEP-08	072 Bz. Sprinkler system plan. 2nd floor
MEP-09	073 Bz. Sprinkler system axonometric view
MEP-10	074 Water system 0.000 levels
MEP-11	075 Domestic water system. Ground floor plan
MEP-12	076 Domestic water system. 2nd Floor
MEP-13	077 Domestic water. Axonometric view
MEP-14.1	078 Domestic water. Views
MEP-14.2	079 Domestic water. 2nd floor. Views & details
MEP-15	080 Water system. Views
MEP-16	081 Hydronic heated floor layout. Ground floor
MEP-17	082 Hydronic heated floor layout. 2nd floor
MEP-18	083 TYCO hydronic floor panel layout
MEP-18.2	084 TYCO panel layout. 2nd floor
MEP-19	085 HRV layout. Ground floor
MEP-20	086 HRV layout 2nd floor
MEP-21	087 Ventilation & HRV isometric view
MEP-22	088 AC layout. Ground floor
MEP-23	089 AC layout. 2nd floor
MEP-24	090 Mechanical room equipment
MEP-25	091 Radon extraction system
MEP-26	092 Radon extraction system. Isometric views & details
S-N.1	093 Structural. Foundation notes
S-1	094 Ground floor slab dimensions
S-2	095 Foundation reinforcement Ground Floor
S-3	096 Foundation reinforcement ! Second floor
S-4	097 Courtyard support wall
S-5	098 Shipping container water tank & pool foundation
S-6	099 Anchor bolts. hold downs on ground floor slab
S-6.1	100 Anchor bolts. hold downs on second floor
S-6.2	101 Foundation details
S-7	102 Built-up CFS columns
S-8	103 CFS column schedule. Trusses
S-9	104 Roof plan notes, reports, specs
S-10	105 Roof plan. SIP layout. Ground floor
S-11	106 Roof plan. SIP Panel Layout. Second floor
S-12	107 Roof plan. Rain gutters and drains
S-13	108 Roof framing plan. Ground floor
S-14	109 Roof framing plan. Second floor
S-15	110 Roof framing plan. Sections
S-16	111 Framing Plan Ground Floor
S-17	112 CFS framing & connection details
S-18	113 Framing isometric view
S-19	114 CFS connection details. Ground floor
S-20	115 CFS connection details
S-21	116 TradeReady® CFS Joist System Details
S-22	117 TradeReady CFS Joist System Details
S-23	118 Structural Insulated Panel (SIP) connection details
S-24	119 Gym & Sauna Structural Plans
S-25	120 Sauna details: stove, benches
S-26	121 Ventilated facade, exterior cladding
S-27	122 Ventilated facade with Stonectip
H2-A0	123 SFR2. Cover sheet
H2-A2	124 SFR2 1/4" Ground floor plan
H2-A3	125 SFR2 1/4" Second floor plan
H2-A4	126 SFR2 1/4" West elevation
H2-A5	127 SFR2 1/4" East elevation
H2-A6	128 SFR2 1/4" North elevation
H2-A7	129 SFR2 1/4" South elevation
H2-A8	130 SFR2. Reduced setback calcs
H2-A9	131 SFR2 Architectural sections
H2-A10	132 SFR2 Architectural sections
H2-A11	133 SFR2 Guest house cover sheet
H2-A12	134 SFR2 Guest house floor plan & sections
H2-A13	135 SFR2 Guest house elevations
H2-A14	136 SFR2 Guest house. Structure
H2-A15	137 SFR2 Guest house. Roof plan
H2-S1	137 SFR2 Structural notes
H2-S2	138 SFR2 Slab dimensions
H2-S3	139 SFR2 Foundation reinforcement details
H2-S4	140 SFR2 Foundation sections
H2-S6	141 SFR2 Shipping container water tank foundation
H2-S8	142 SFR2 Foundation details
H2-S9	143 SFR2 Built-up CFS columns
H2-S10	144 SFR2 CFS column schedule
H2-S11	145 SFR2 Roof plan notes, reports, spncs
H2-S12	146 SFR2 Roof plan. SIP layout. Ground floor
H2-S13	147 SFR2 Roof plan. SIP Panel Layout. Second floor
H2-S14	148 SFR2 Roof framing plan.
H2-S15	149 SFR2 Framing Plan Ground Floor
H2-S16	150 SFR2 Framing sections, connections
H2-S17	151 SFR2. CFS FRAMING. ISOMETRIC VIEW
H2-S18	152 SFR2. Structrual Steel Insulated Panels
H2-S19	153 SFR2. TradeReady® CFS Joist System Details
H2-S20	154 SFR2. TradeReady® CFS Joist System Details
C-28	155 SCC Erosion control. SHt 1
C-29	156 SCC Erosion control. SHt 2
CG-1	CALGreen 1
CG-2	CALGreen 2
CG-3	CALGreen 3
CG-4	CALGreen 4

5SFR1 PLANS AND SUBDIVISION PLANS

SFR2 PLANS AND GUEST HOUSE PLANS

GIST RD. SFR 1

APN544-23-041; PROPOSED ADDRESS: 20555 GIST RD, LOS GATOS, CA 95033

REVISION HISTORY

S3DA Structural & Architectural Design
4196 Adams Ave. San Diego CA 92116
(619) 404-0220

Mr. Nader Moavenian
nader.m@s3da-design.com

STAMP

1. The contractor must check all dimensions on-site before commencing work

2. These drawings are to be read in conjunction with all relevant designer, engineer or specialist drawings and specifications

3. The contractor is responsible for providing all necessary temporary support to the building and any adjacent structures

COUNTY APPROVAL STAMP

REVISION DATE
01/02/2021

DRAWING NAME
000 SFR1 Cover Sheet

Drawing Scale

H1 A

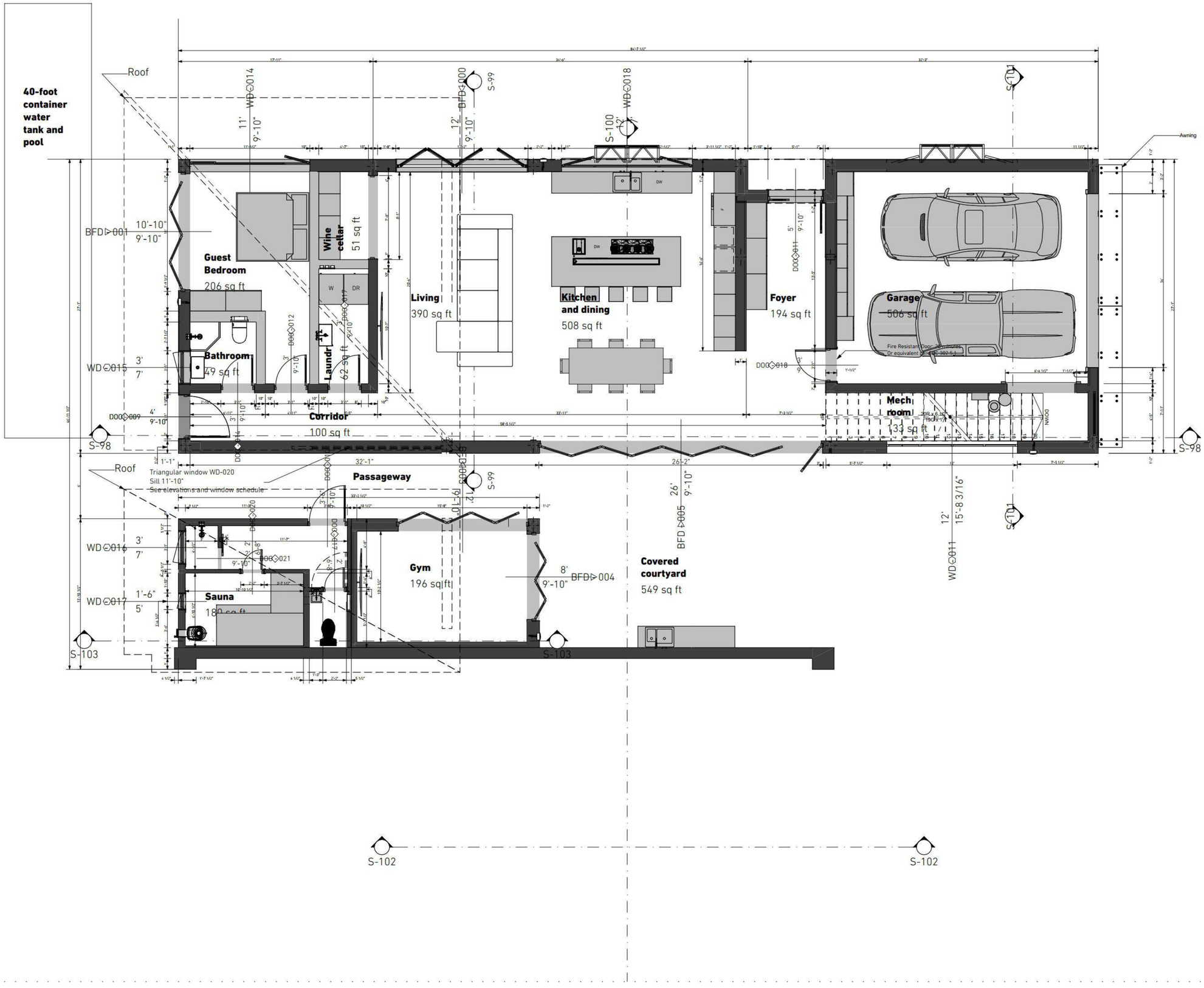

GIST RD. SFR 1

APN544-23-041; PROPOSED ADDRESS: 20555 GIST RD, LOS GATOS, CA 95033

REVISION HISTORY

S3DA Structural & Architectural Design
4196 Adams Ave. San Diego CA 92116
(619) 404-0220

Mr. Nader Moavenian
nader.m@s3da-design.com

STAMP

1. The contractor must check all dimensions on-site before commencing work

2. These drawings are to be read in conjunction with all relevant designer, engineer or specialist drawings and specifications

3. The contractor is responsible for providing all necessary temporary support to the building and any adjacent structures

COUNTY APPROVAL STAMP

REVISION DATE
01/02/2021

DRAWING NAME
001 SFR1 1/4" Ground floor plan

Drawing Scale
1/4" = 1'-0"

H1 A-1

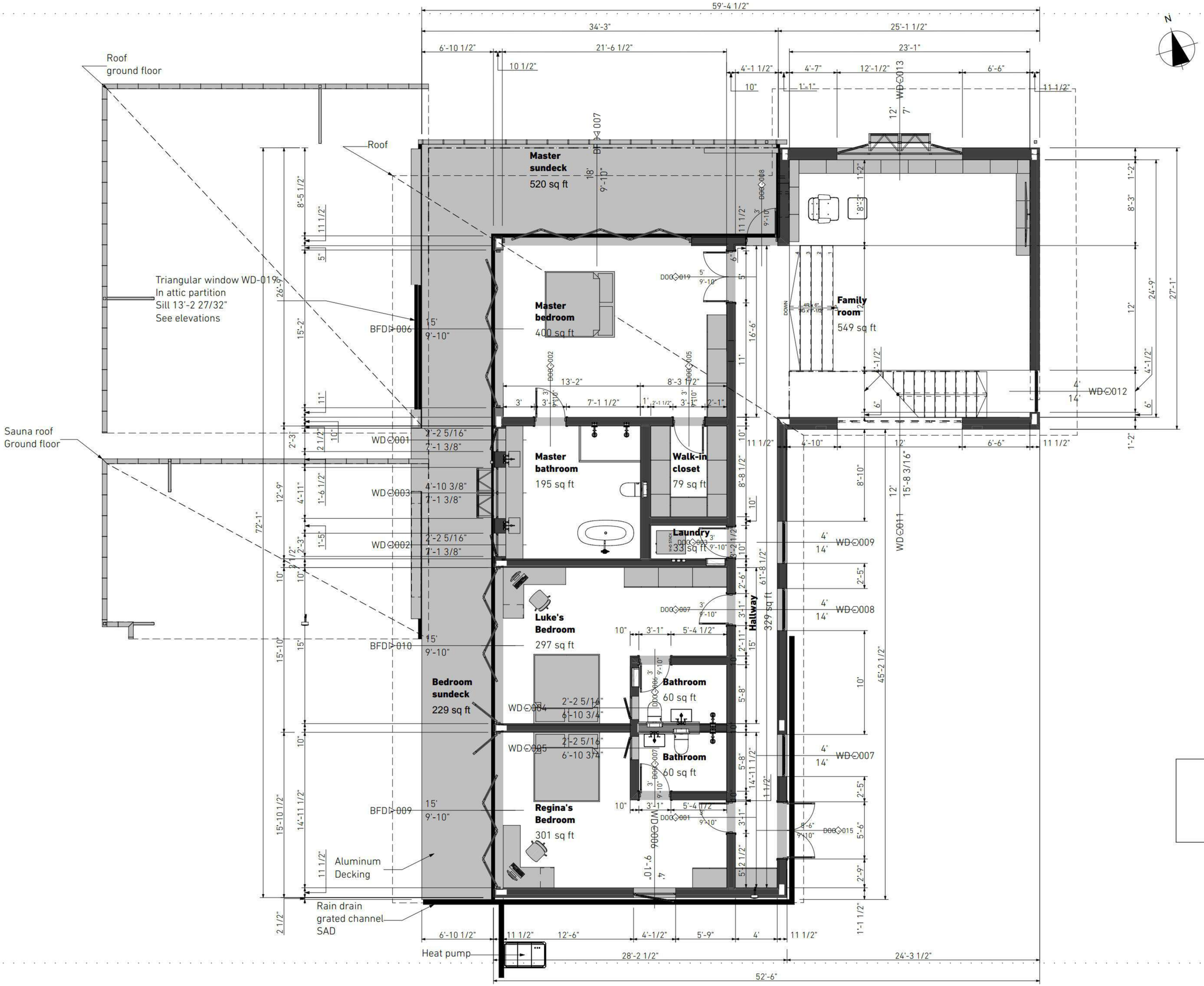

GIST RD. SFR 1

APN544-23-041; PROPOSED ADDRESS: 20555

GIST RD, LOS GATOS, CA 95033

REVISION HISTORY

S3DA Structural & Architectural Design
4196 Adams Ave. San Diego CA 92116
(619) 404-0220

Mr. Nader Moavenian
nader.m@s3da-design.com

STAMP

1. The contractor must check all dimensions on-site before commencing work

2. These drawings are to be read in conjunction with all relevant designer, engineer or specialist drawings and specifications

3. The contractor is responsible for providing all necessary temporary support to the building and any adjacent structures

COUNTY APPROVAL STAMP

REVISION DATE
01/02/2021

DRAWING NAME
002 SFR1 1/4"
Second floor plan

Drawing Scale
1/4" = 1'-0"

H1 A-2

GIST RD. SFR 1

APN544-23-041; PROPOSED ADDRESS: 20555
GIST RD, LOS GATOS, CA 95033

REVISION HISTORY

S3DA Structural & Architectural Design
4196 Adams Ave. San Diego CA 92116
(619) 404-2220

Mr. Nader Moavenian
nader.m@s3da-design.com

STAMP

1. The contractor must check all dimensions on-site before commencing work

2. These drawings are to be read in conjunction with all relevant designer, engineer or specialist drawings and specifications

3. The contractor is responsible for providing all necessary temporary support to the building and any adjacent structures

COUNTY APPROVAL STAMP

REVISION DATE
01/02/2021

DRAWING NAME
003 SFR1 1/4" West elevation

Drawing Scale
1/4" = 1'-0"

H1 A-3

GIST RD. SFR 1

APN544-23-041; PROPOSED ADDRESS: 20555
GIST RD, LOS GATOS, CA 95033

REVISION HISTORY

S3DA Structural & Architectural Design
4196 Adams Ave. San Diego CA 92116
(619) 404-0220

Mr. Nader Moavenian
nader.m@s3da-design.com

STAMP

1. The contractor must check all dimensions on-site before commencing work

2. These drawings are to be read in conjunction with all relevant designer, engineer or specialist drawings and specifications

3. The contractor is responsible for providing all necessary temporary support to the building and any adjacent structures

COUNTY APPROVAL STAMP

REVISION DATE
01/02/2021

DRAWING NAME
004 SFR1 1/4" East elevation

Drawing Scale
1/4" = 1'-0"

H1 A-4

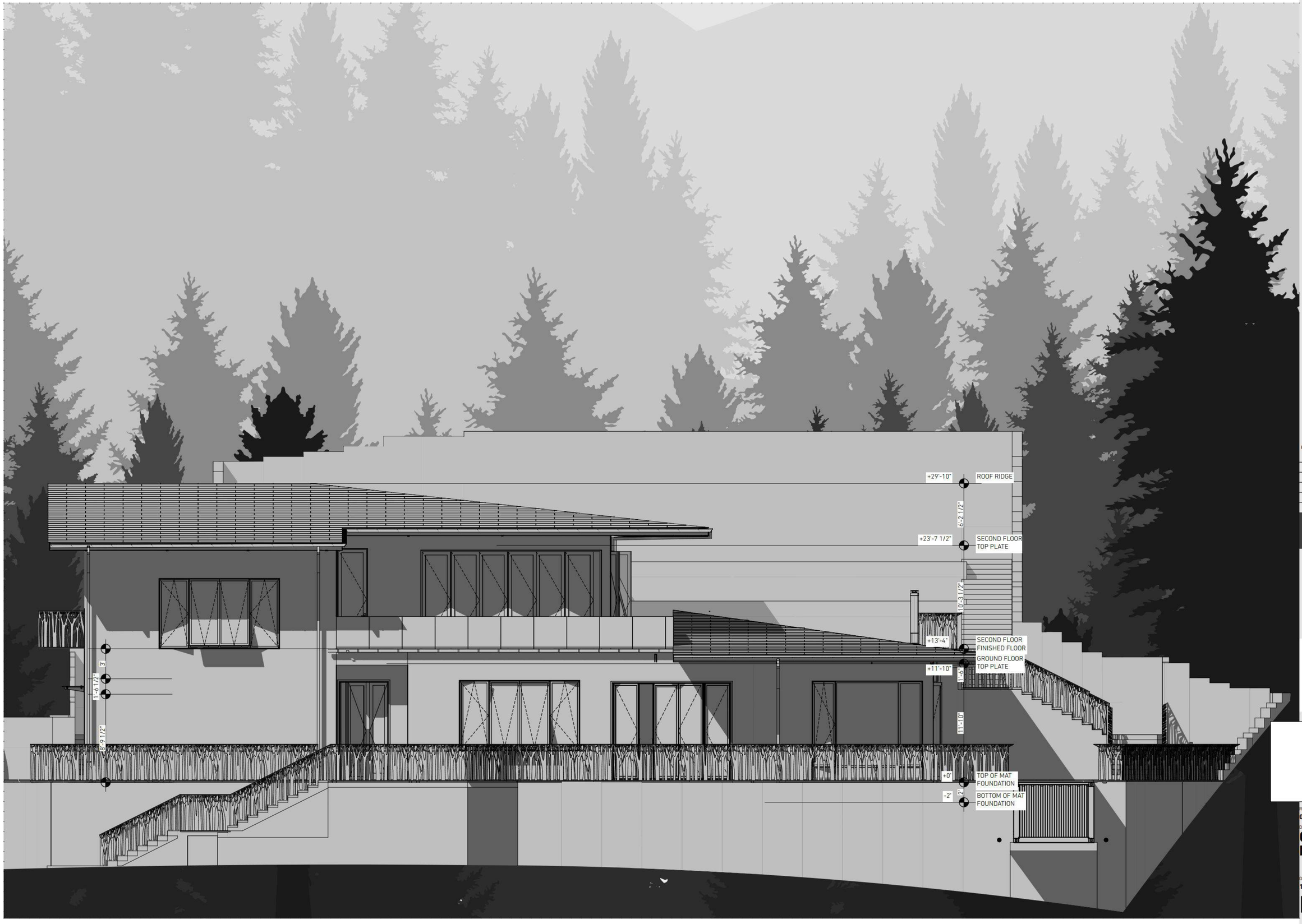

GIST RD. SFR 1

APN544-23-041; PROPOSED ADDRESS: 20555
GIST RD, LOS GATOS, CA 95033

REVISION HISTORY

S3DA Structural & Architectural Design
4196 Adams Ave. San Diego CA 92116
(619) 404-0220

Mr. Nader Moavenian
nader.m@s3da-design.com

STAMP

1. The contractor must check all dimensions on-site before commencing work

2. These drawings are to be read in conjunction with all relevant designer, engineer or specialist drawings and specifications

3. The contractor is responsible for providing all necessary temporary support to the building and any adjacent structures

COUNTY APPROVAL STAMP

REVISION DATE
01/02/2021

DRAWING NAME
005 SFR1 1/4" North elevation

Drawing Scale
1/4" = 1'-0"

H1 A-5

E-25 COURTYARD SOUTH ELEVATION 1/4" = 1'-0"

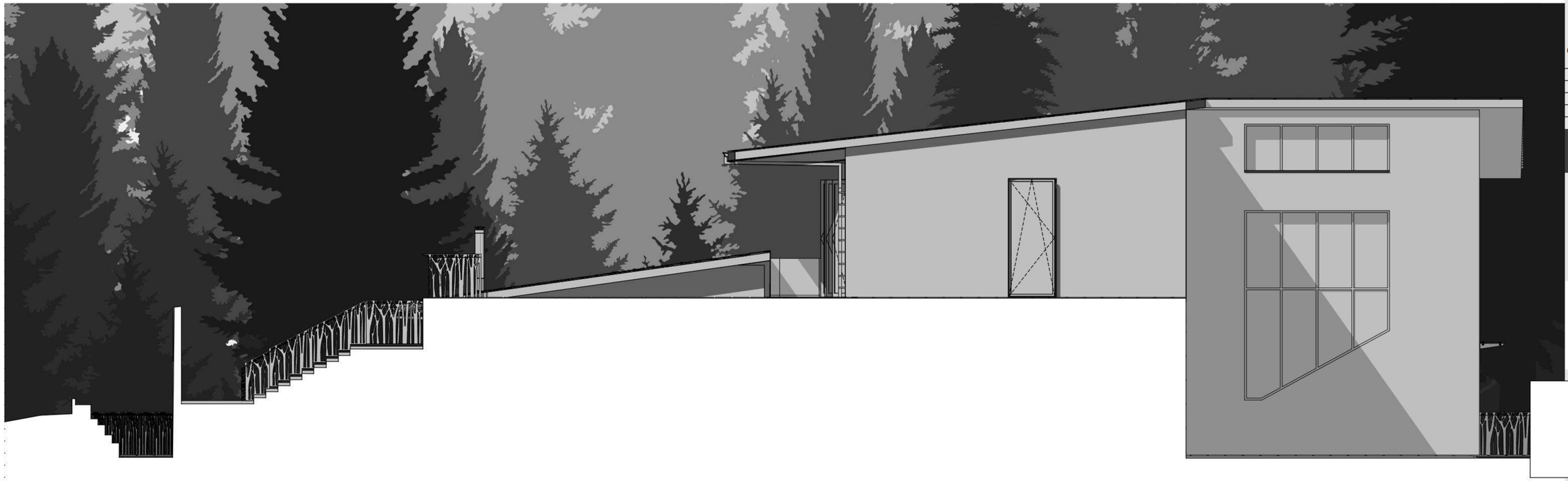

E-19 SOUTH ELEVATION: SECOND FLOOR VIEW 1/4" = 1'-0"1/4" = 1'-0"

GIST RD. SFR 1

APN544-23-041; PROPOSED ADDRESS: 20555 GIST RD, LOS GATOS, CA 95033

REVISION HISTORY

S3DA Structural & Architectural Design
4196 Adams Ave, San Diego CA 92116
(619) 404-0220

Mr. Nader Moavenian
nader.m@s3da-design.com

STAMP

1. The contractor must check all dimensions on-site before commencing work

2. These drawings are to be read in conjunction with all relevant designer, engineer or specialist drawings and specifications

3. The contractor is responsible for providing all necessary temporary support to the building and any adjacent structures

COUNTY APPROVAL STAMP

REVISION DATE
01/02/2021

DRAWING NAME
006 SFR1 1/4" South elevation

Drawing Scale

H1 A-6

E-22 Courtyard, gym & sauna North elevation 1/4" = 1'-0"

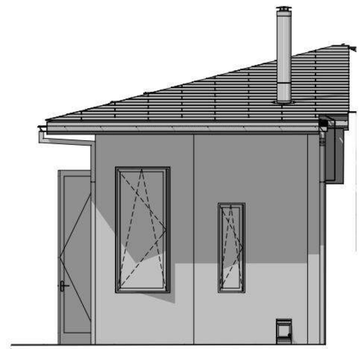

E-21 Sauna East elevation 1/4" = 1'-0"

EXTERIOR FINISHES

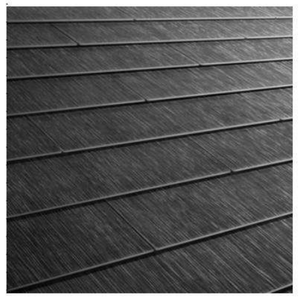

TESLA ROOF

ROOF FINISH

FLAMED BLACK GRANITE

EXTERIOR WALL CLADDING
ALU HONEYCOMB CLADDING PANELS

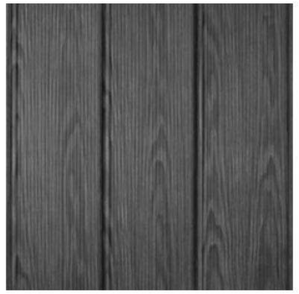

ALUMINUM DECKING w/WOOD FINISH

DECKS, BALCONIES

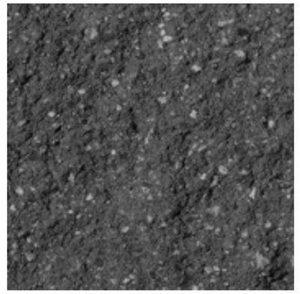

ONYX SPLIT CMU

CMU RETAINING WALLS

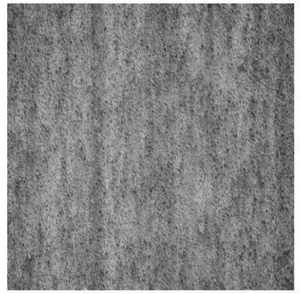

CORTEN STEEL

EXTERIOR RAILINGS
TREE PLANTERS
VEGETABLE PLANTERS

GRANITE STEPS

EXTERIOR ARCHITECTURAL STEPS
LANDSCAPING STEPS

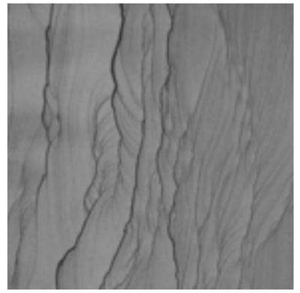

SAND STONE

LANDSCAPE TILES
YARD TILES

GIST RD. SFR 1

APN544-23-041; PROPOSED ADDRESS: 20555 GIST RD, LOS GATOS, CA 95033

REVISION HISTORY

S3DA Structural & Architectural Design
4196 Adams Ave. San Diego CA 92116
(619) 404-0220

Mr. Nader Moavenian
nader.m@s3da-design.com

STAMP

1. The contractor must check all dimensions on-site before commencing work

2. These drawings are to be read in conjunction with all relevant designer, engineer or specialist drawings and specifications

3. The contractor is responsible for providing all necessary temporary support to the building and any adjacent structures

COUNTY APPROVAL STAMP

REVISION DATE
01/02/2021

DRAWING NAME
007 SFR1 1/4" Courtyard, gym & sauna elevations

Drawing Scale
1/4" = 1'-0"

H1 A-7

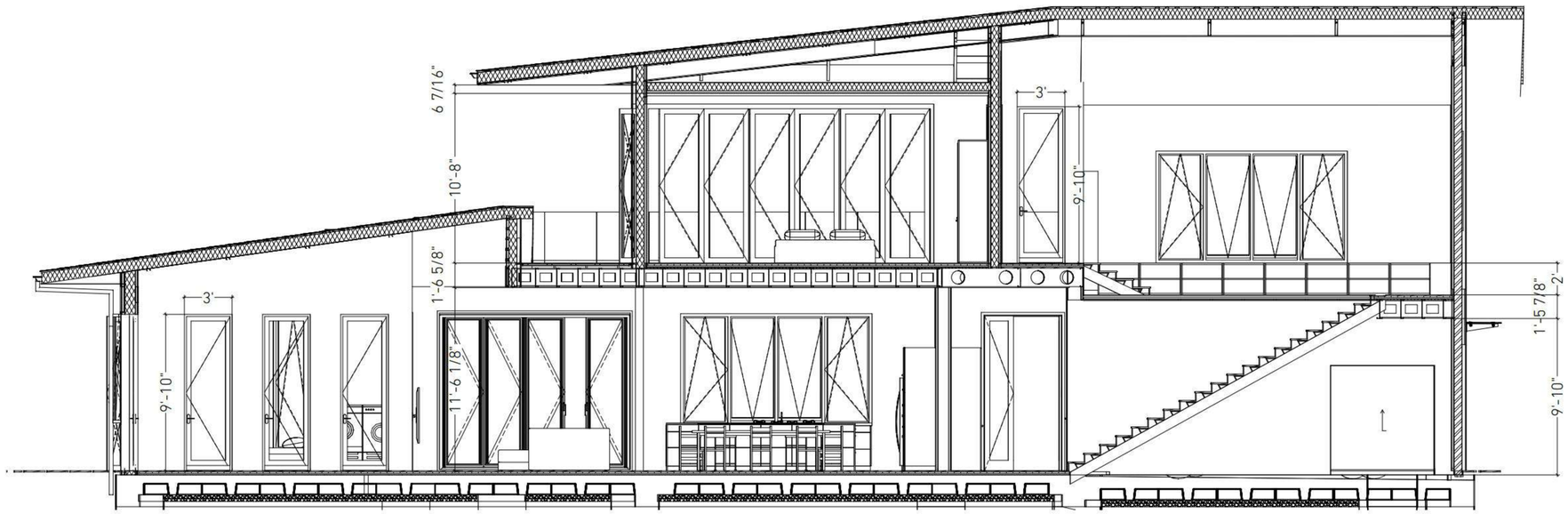

S-98 Architectural section 1/4" = 1'-0"

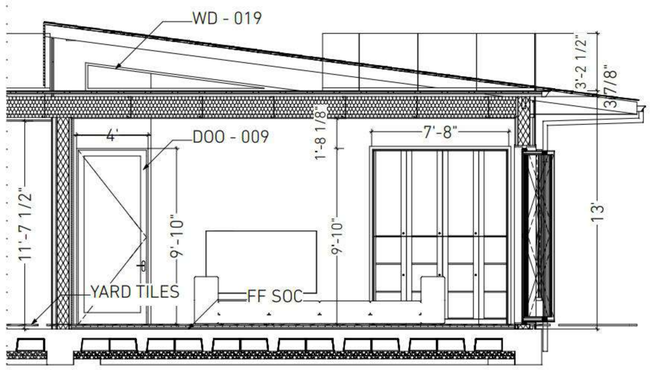

S-99 Architectural section 1/4" = 1'-0"

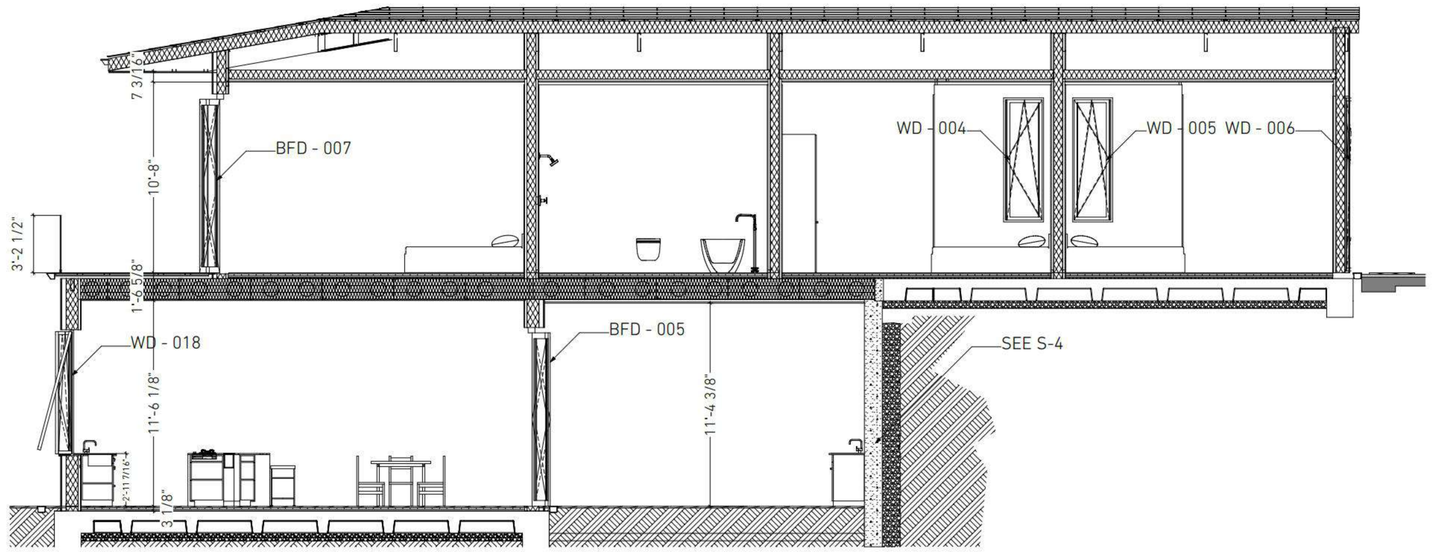

S-100 Architectural section 1:50

GIST RD. SFR 1

APN544-23-041; PROPOSED ADDRESS: 20555 GIST RD, LOS GATOS, CA 95033

REVISION HISTORY

S3DA Structural & Architectural Design
4196 Adams Ave. San Diego CA 92116
(619) 404-0220

Mr. Nader Moavenian
nader.m@s3da-design.com

STAMP

1. The contractor must check all dimensions on-site before commencing work

2. These drawings are to be read in conjunction with all relevant designer, engineer or specialist drawings and specifications

3. The contractor is responsible for providing all necessary temporary support to the building and any adjacent structures

COUNTY APPROVAL STAMP

REVISION DATE
01/02/2021

DRAWING NAME
008 SFR1 Architectural sections

Drawing Scale

H1 A-8

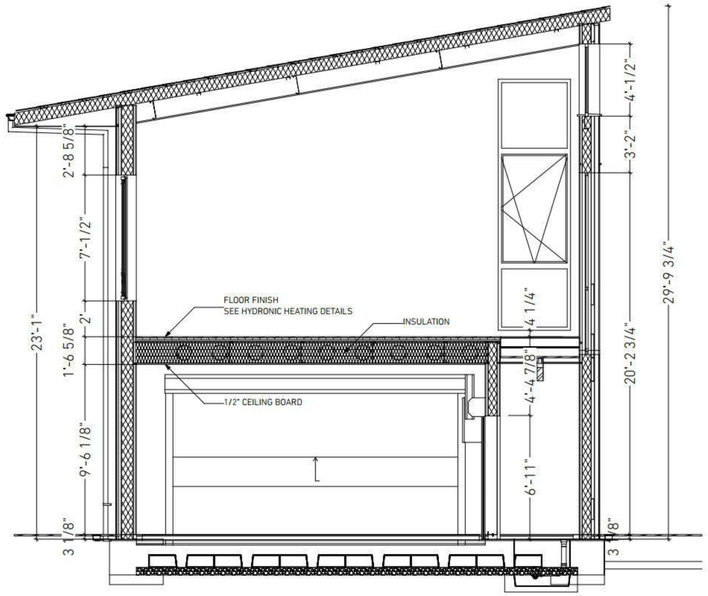

S-101 Garage, mech room, family room 1/4" = 1'-0"

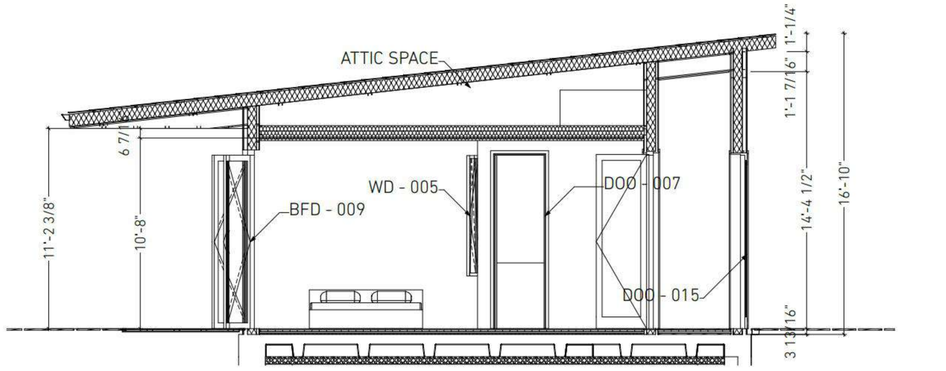

S-102 2nd Floor: Regina's Bedroom Architectural Section 1/4" = 1'-0"

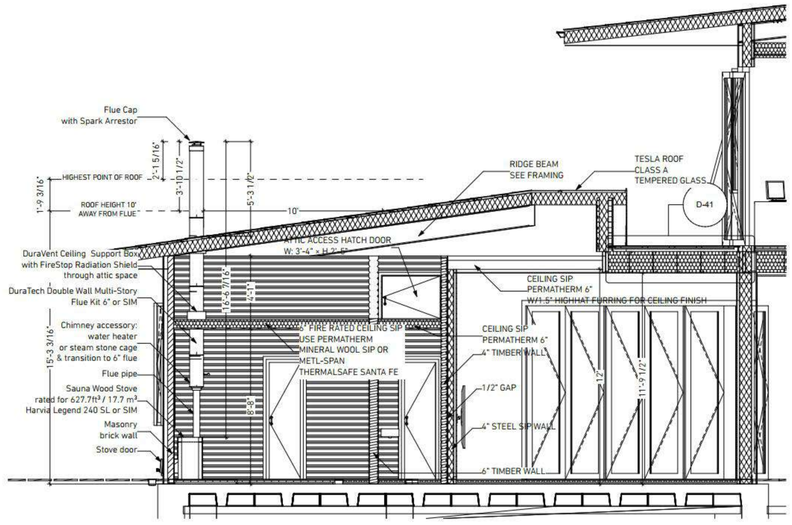

S-103 Gym & Sauna Section 1/4" = 1'-0"

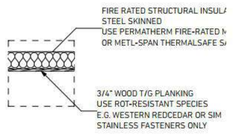

D-40 SAUNA CEILING INSULATION 1:25

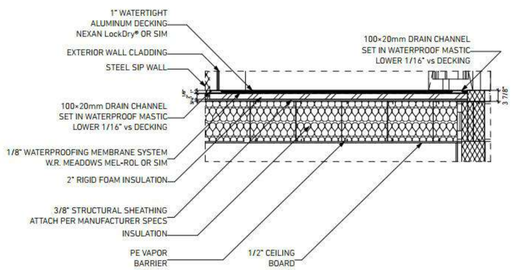

D-41 WARM DECK DETAIL 1:25

GIST RD. SFR 1

APN544-23-041; PROPOSED ADDRESS: 20555 GIST RD, LOS GATOS, CA 95033

REVISION HISTORY

S3DA Structural & Architectural Design
4196 Adams Ave. San Diego CA 92116
(619) 404-0220

Mr. Nader Moavenian
nader.m@s3da-design.com

STAMP

1. The contractor must check all dimensions on-site before commencing work

2. These drawings are to be read in conjunction with all relevant designer, engineer or specialist drawings and specifications

3. The contractor is responsible for providing all necessary temporary support to the building and any adjacent structures

COUNTY APPROVAL STAMP

REVISION DATE
01/02/2021

DRAWING NAME
009 SFR1 Architectural sections

Drawing Scale

H1 A-9

COUNTY OF SANTA CLARA
GENERAL CONSTRUCTION SPECIFICATIONS
GENERAL CONDITIONS
1. ALL CONSTRUCTION WORK SHALL BE PERFORMED IN ACCORDANCE WITH THE SOILS AND/OR GEOTECHNICAL REPORT PREPARED BY MODERN TECHNOLOGY INC, DATED JULY 5, 2019. THIS REPORT IS SUPPLEMENTED BY
   a. THESE PLANS AND SPECIFICATIONS
   b. THE COUNTY OF SANTA CLARA STANDARD DETAILS
   c. THE COUNTY OF SANTA CLARA STANDARD SPECS
   d. STATE OF CALIFORNIA STANDARD DETAILS
   e. STATE OF CALIFORNIA STANDARD SPECIFICATIONS. IN THE EVENT OF CONFLICT, THE FORMER SHALL TAKE PRECEDENCE OVER THE LATTER. THE PERFORMANCE AND COMPLETION OF ALL WORK MUST BE TO THE SATISFACTION OF THE COUNTY.
2. DEVELOPER IS RESPONSIBLE FOR INSTALLATION OF THE IMPROVEMENTS SHOWN ON THESE PLANS AND HE OR HIS SUCCESSOR PROPERTY OWNERS ARE RESPONSIBLE FOR THEIR CONTINUED MAINTENANCE.
3. DEVELOPER SHALL BE RESPONSIBLE FOR CORRECTION OF ANY ERRORS OR MISSIONS IN THESE PLANS. THE COUNTY SHALL BE AUTHORIZED TO REQUIRE DISCONTINUANCE OF ANY WORK AND SUCH CORRECTION AND MODIFICATION OF PLANS AS MAY BE NECESSARY TO COMPLY WITH COUNTY STANDARDS OR CONDITIONS OF DEVELOPMENT APPROVAL.
4. DEVELOPER SHALL OBTAIN ENCROACHMENT PERMITS FROM THE SANTA CLARA VALLEY WATER DISTRICT AND CALIFORNIA DEPARTMENT OF TRANSPORTATION WHERE NEEDED. COPIES OF THESE PE RMITS SHALL BE KEPT AT THE JOB SITE FOR REVIEW BY THE COUNTY'S INSPECTOR.
5. DEVELOPER SHALL REMOVE OR TRIM ALL TREES TO PROVIDE AN UNOBSTRUCTED FIFTEEN (15) FOOT VERTICAL CLEARANCE FOR ROADWAY AREA.
6. THIS PLAN AUTHORIZES THE REMOVAL OF ONLY THOSE TREES WITH TRUNK DIAMETERS GREATER THAN 12 INCHES MEASURED 4.5 FEET ABOVE THE GROUND THAT ARE SHOWN TO BE REMOVED UNLESS AN AMENDED PLAN IS APPROVED OR A SEPARATE TREE REMOVAL PERMIT IS OBTAINED FROM THE PLANNING OFFICE. IT IS THE CONTRACTOR'S RESPONSIBILITY TO ENSURE THAT REMOVAL OF ADDITIONAL TREES HAS BEEN PERMITTED.
7. DEVELOPER SHALL PROVIDE ADEQUATE DUST CONTROL AS REQUIRED BY THE COUNTY INSPECTOR.
8. ALL PERSONS MUST COMPLY WITH SECTION 4442 OF THE PUBLIC RESOURCES CODE AND SECTION 13005 OF THE HEALTH AND SAFETY CODE RELATING TO THE USE OF SPARK ARRESTERS.
9. UPON DISCOVERING OR UNEARTHING ANY BURIAL SITE AS EVIDENCED BY HUMAN SKELETAL REMAINS OR ARTIFACTS, THE PERSON MAKING SUCH DISCOVERY SHALL IMMEDIATELY NOTIFY THE COUNTY CORONER AT (408) 454-2520 AND LAND DEVELOPMENT ENGINEERING OFFICE AT (408) 299-5730.
10. THESE PLANS ARE FOR THE WORK DESCRIBED IN THE SCOPE OF WORK ONLY. A SEPARATE PERMIT WILL BE REQUIRED FOR THE SEPTIC LINE CONSTRUCTION.
11. ANY DEVIATION FROM THESE APPROVED PLANS SHALL BE RE-APPROVED IN WRITING BY THE COUNTY ENGINEER PRIOR TO CONSTRUCTION.

CONSTRUCTION STAKING
1. THE DEVELOPER'S ENGINEER IS RESPONSIBLE FOR THE INITIAL PLACEMENT AND REPLACEMENT OF CONSTRUCTION GRADE STAKES. THE STAKES ARE TO BE ADEQUATELY IDENTIFIED, LOCATED, STABILIZED, ETC. FOR THE CONVENIENCE OF CONTRACTORS. LATERAL OFFSET OF STAKES SET FOR CURBS AND GUTTERS SHALL NOT EXCEED 2 1/2 FEET FROM BACK OF CURB.
2. ANY PROPERTY LINE STAKES OR ROAD MONUMENTS DISTURBED DURING CONSTRUCTION SHALL BE REPLACED BY DEVELOPER'S ENGINEER AND LICENSED LAND SURVEYOR.
3. PROPERTY LINE STAKING MUST BE PERFORMED BY THE PROJECT ENGINEER OR LAND SURVEYOR TO ESTABLISH OR RE-ESTABLISH THE PROJECT BOUNDARY AND SHALL BE INSPECTED BY THE COUNTY INSPECTOR PRIOR TO THE BEGINNING OF THE WORK.
4. PROPER CONSTRUCTION STAKES SHALL BE SET IN THE FIELD BY THE PROJECT ENGINEER OR LAND SURVEYOR AND VERIFIED BY THE COUNTY INSPECTOR PRIOR TO THE COMMENCEMENT OF GRADING.

CONSTRUCTION INSPECTION
1. CONTRACTOR SHALL NOTIFY PERMIT INSPECTION UNIT, SANTA CLARA COUNTY PRIOR TO COMMENCING WORK AND FOR FINAL INSPECTION OF WORK AND SITE.
2. THE COUNTY REQUIRES A MINIMUM OF 24 HOURS ADVANCE NOTICE FOR GENERAL INSPECTION, 48 HOURS FOR ASPHALT CONCRETE INSPECTION.
3. INSPECTION BY SANTA CLARA COUNTY SHALL BE LIMITED TO INSPECTION OF MATERIALS AND PROCESSES OF CONSTRUCTION TO OBSERVE THEIR COMPLIANCE WITH PLANS' SPECIFICATIONS BUT DOES NOT INCLUDE RESPONSIBILITY FOR THE SUPERINTENDENT OF CONSTRUCTION, SITE CONDITIONS, EQUIPMENT OR PERSONNEL. CONTRACTOR SHALL NOTIFY THE COUNTY LAND DEVELOPMENT INSPECTOR AT PHONE (408) 299-6868 AT LEAST 24 HOURS PRIOR TO COMMENCING WORK AND FOR FINAL INSPECTION OF WORK AND SITE.
4. DEVELOPER AND/OR HIS AUTHORIZED REPRESENTATIVE MUST SUBMIT WRITTEN REQUEST FOR FINAL INSPECTION AND ACCEPTANCE. SAID REQUEST SHALL BE DIRECTED TO THE INSPECTION OFFICE NOTED ON THE PERMIT FORM.
5. THE CONTRACTOR SHALL PROVIDE TO THE COUNTY CONSTRUCTION INSPECTOR WITH PAD ELEVATION AND LOCATION CERTIFICATES, PREPARED BY THE PROJECT ENGINEER OR LAND SURVEYOR, PRIOR TO COMMENCEMENT OF THE BUILDING FOUNDATION.

SITE PREPARATION ("CLEARING AND GRUBBING")
1. EXISTING TREES AUTHORIZED FOR REMOVAL, ROOTS, AND FOREIGN MATERIAL IN AREAS TO BE IMPROVED WILL BE REMOVED TO AN AUTHORIZED DISPOSAL SITE AS FOLLOWS:
   a. TO A MINIMUM DEPTH OF TWO FEET BELOW THE FINISHED GRADE OF PROPOSED ROADWAYS (EITHER PRIVATE OR TO BE DEDICATED TO PUBLIC USE)
   b. FROM AREAS AFFECTED BY THE PROPOSED GRADING EXCEPT WHERE NOTED ON THE PLANS.
2. IT SHALL BE THE RESPONSIBILITY OF THE DEVELOPER TO MOVE OR RELOCATE UTILITY POLES AND OTHER OBSTRUCTIONS IN THE WAY OF CONSTRUCTION.

UTILITY LOCATION, TRENCHING & BACKFILL
1. CONTRACTOR SHALL NOTIFY USA (UNDERGROUND SERVICE ALERT) AT 1-800-277-2600 A MINIMUM OF 24 HOURS BEFORE BEGINNING UNDERGROUND WORK FOR VERIFI CATI ON OF THE LOCATION OF UNDERGROUND UTILITIES.
2. ACCURATE VERIFICATION AS TO SIZE. LOCATION. AND DEPTH OF EXISTING UNDERGROUND CONDUITS OR FACILITIES SHALL BE THE INDIVIDUAL CONTRACTORS RESPONSIBILITY. PLAN LOCATIONS ARE APPROXIMATE AND FOR GENERAL INFORMATION ONLY.
3. ALL UNDERGROUND INSTALLATIONS SHALL BE IN PLACE AND THE TRENCH BACKFILLED AND COMPACTED BEFORE PLACING AGGREGATE B ASE MATERIAL OR SURFACE STRUCTURES. SURFACING MAY BE DONE IF THE UTILITY COMPANY CONCERNED INDICATES BY LETTER THAT IT WILL BORE. UNLESS SPECIFICALLY AUTHORIZED BY THE COUNTY, GAS AND WATER MAINS SHALL BE INSTALLED OUTSIDE THE PAVED AREAS.
4. TRENCH BACKFILL IN EXISTING PAVEMENT AREAS SHALL BE SAND MATERIAL IN ACCORDANCE WITH THE APPLICABLE PROVISIONS OF THE STATE SPECIFICATIONS. THE STRUCTURAL SECTION FOR TRENCH REPLACEMENT SHALL CONSIST OF NOT LESS THAN 12 INCHES OF APPROVED AGGREGATE BASE MATERIAL COMPACTED TO A RELATIVE COMPACTION OF AT LEAST 95% AND 4 INCHES OF HOT ASPHALT CONCRETE PLACED IN TWO LIFTS. TRENCH RESTORATION FOR HIGHER TYPE PAVEMENTS SHALL BE MADE IN KIND OR AS DIRECTED BY THE COUNTY.
5. TRENCH BACKFILL IN NEW CONSTRUCTION AREAS SHALL BE SAND MATERIAL COMPACTED TO A RELATIVE COMPACTION OF AT LEAST 90%. THE REQUIREMENT FOR SELECT MATERIAL MAY BE WAIVED BY COUNTY IF THE NATIVE SOIL IS SUITABLE FOR USE AS TRENCH BACKFILL BUT THE COMPACTION REQUIREMENTS WILL NOT BE THEREBY WAIVED.
6. BACKFILL AND TRENCH RESTORATION REQUIREMENTS SHALL APPLY AS MINIMUM STANDARDS TO ALL UNDERGROUND FACILITIES INSTALLED BY OTHER FIRMS OR PUBLIC AGENCIES.

RETAINING WALLS
1. REINFORCED CONCRETE AND CONCRETE MASONRY UNIT RETAINING WALLS SHALL HAVE FOUNDATION AND REINFORCEMENT INSPECTED BY THE COUNTY ENGINEERING INSPECTOR AND ENGINEER OF RECORD PRIOR TO POURING THE FOUNDATION AND FORMING THE WALL
2. SEGMENTAL BLOCK RET AI NING WALLS SHALL HAVE FOUNDATION AND REINFORCEMENT INSPECTED BY THE COUNTY ENGINEERING INSPECTOR.

GRADING
1. EXCAVATED MATERIAL SHALL BE PLACED IN THE FILL AREAS DESIGNATED OR SHALL BE HAULED AWAY FROM THE SITE TO A COUNTY APPROVED DISPOSAL SITE. WHERE FILL MATERIAL IS TO BE PLACED ON NATURAL GROUND. IS SHALL BE STRIPPED OF ALL VEGETATION. T O ACHIEVE A PROPER BOND WITH THE FILL MATERIAL, THE SURFACE OF THE GROUND SHALL BE SCARIFIED TO DEPTH OF 6' BEFORE FILL IS PLACED. WHERE NATURAL GROUND IS STEEPER THAN 5:1, IT SHALL BE BENCHED AND THE FILL KEYED IN TO ACHIEVE STABILITY. WHERE NEW FILL IS TO BE PLACED ON EXISTING FILL THE EXISTING FILL SHALL BE REMOVED UNTIL MATERIAL COMPACTED TO 90% RELATIVE COMPACTION IS EXPOSED. THEN THE NEW FILL MATERIAL SHALL BE PLACED AS PER THESE CONSTRUCTION NOTES. FILL MATERIAL SHALL BE PLACED IN UNIFORM LIFTS NOT EXCEEDING 6" IN UN-COMPACTED THICKNESS. BEFORE COMPACTION BEGINS, THE FILL SHALL BE BROUGHT TO A WATER CONTENT THAT WLL PERMIT PROPER COMPACTION BY EITHER 1) AERATING THE FILL IF IT IS TOO WET OR 2) MOISTENING THE FILL WTH WATER IF IT IS TOO DRY. EACH LIFT SHALL BE THOROUGHLY MIXED BEFORE COMPACTION TO ENSURE A UNIFORM DISTRIBUTION OF MOISTURE.
2. EXCESS CUT MATERIAL SHALL NOT BE SPREAD OR STOCKPILED ON THE SITE.
3. SURPLUS EARTH FILL MATERIAL SHALL BE PLACED IN A SINGLE (8' MAX) THICK LAYER COMPACTED TO WITHSTAND WEATHERING IN THE AREA(S) DELINEATED ON THE PLAN.
4. NO ORGANIC MATERIAL SHALL BE PLACED IN ANY FILL. NO TREES SHALL BE REMOVED OUTSIDE OF CUT, FILL OR ROADWAY AREAS.
5. THE UPPER 6" OF SUB-GRADE BELOW DRIVEWAY ACCESS ROAD OR PARKING AREA SHALL BE COMPACTED TO 95% OF MAXIMUM DENSITY.
6. MAXIMUM CUT SLOPE SHALL BE 2 HORIZONTAL TO 1 VERTICAL. MAXIMUM FILL SLOPE SHALL BE 2 HORIZONTAL TO 1 VERTICAL. EXCESS MATERIAL SHALL BE OFF HAULED TO A COUNTY APPROVED DUMP SITE.
7. NOTIFY SOILS ENGINEER TWO (2) DAYS PRIOR TO COMMENCEMENT OF ANY GRADING WORK TO COORDINATE THE WORK IN THE FIELD.
8. ALL MATERIALS FOR FILL SHOULD BE APPROVED BY THE SOILS ENGINEER BEFORE IT IS BROUGHT TO THE SITE.
9. THE UPPER 6" OF THE SUB-GRADE SOIL SHALL BE SCARIFIED, MOISTURE CONDITIONED AND COMPACTED TO A MINIMUM RELATIVE COMPACTION OF 95%
10. ALL AGGREGATE BASE MATERIAL SHALL BE COMPACTED TO A MINIMUM 95% RELATIVE COMPACTION.
11. THE GEOTECHNICAL PLAN REVIEW LETTER MUST BE REVIEWED AND APPROVED BY THE COUNTY GEOLOGIST PRIOR TO FINAL APPROVAL BY THE COUNTY ENGINEER FOR BUILDING OCCUPANCY.
12. THE PROJECT GEOTECHNICAL ENGINEER SHALL PERFORM COMPACTION TESTING AND PRESENT THE RESULTS TO THE COUNTY ENGINEERING INSPECTOR PRIOR TO THE CONSTRUCTION OF ANY PAVED AREA.
13. GRADING WORK BETWEEN OCTOBER 15TH AND APRIL 15TH IS AT THE DISCRETION OF THE SANTA CLARA COUNTY GRADING OFFICIAL
14. TOTAL DISTURBED AREA FOR THE PROJECT: 12,000SF APN544-23-041, 13,000SF APN544-23-042
15. WDID NO__________N/A____________.
16. THE INSPECTOR MAY VERIFY THAT A VALID NOTICE OF INTENT (NOI) HAS BEEN ISSUED BY THE STATE AND THAT A CURRENT AND UP TO DATE STORM WATER POLLUTION PREVENTION PLAN (SWPPP) IS AVAILABLE ON SITE.

TREE PROTECTION
1. FOR ALL TREES TO BE RETAINED WITH A CANOPY IN THE DEVELOPMENT AREA OR INTERFACES WITH THE LIMITS OF GRADING FOR ALL PROPOSED DEVELOPMENT ON SITE, THE TREES SHALL BE PROTECTED BY THE PLACEMENT OF RIGID TREE PROTECTIVE FENCING, CONSISTENT WITH THE COUNTY INTEGRATED LANDSCAPE GUIDELINES, AND INCLUDE THE FOLLOWING:
   a. FENCING SHOULD BE PLACED ALONG THE OUTSIDE EDGE OF THE DRIP LINE OF THE TREE OR GROVE OF TREES.
   b. THE FENCING SHALL BE MAINTAIN ED THROUGHOUT THE SITE CONSTRUCTION PERIOD AND SHALL BE INSPECTED PERIODICALLY FOR DAMAGE AND PROPER FUNCTION.
   c. FENCING SHALL BE REPAIRED, AS NECESSARY, TO PROVIDE A PHYSICAL BARRIER FROM CONSTRUCTION ACTIVITIES.
   d. SIGNAGE STATING, "WARNING – THIS FENCING SHALL NOT BE REMOVED WITHOUT PERMISSION FROM THE SANTA CLARA COUNTY PLANNING OFFICE (408) 299-5770. COUNTY OF SANTA CLARA TREE PROTECTION MEASURES MAY BE FOUND AT http://www.sccplannlng.gov." SHALL BE PLACED ON THE TREE PROTECTIVE FENCING UNTIL FINAL OCCUPANCY.
2. PRIOR TO COMMENCEMENT OF ANY CONSTRUCTION ACTIVITY, TREE PROTECTIVE FENCING SHALL BE SECURELY IN PLACED AND INSPECTED BY THE LAND DEVELOPMENT ENGINEERING INSPECTOR.
3. SEE EXISTING TREE PROTECTION DETAILS FOR MORE INFORMATION.

ACCESS ROADS AND DRIVEWAYS
1. DRIVEWAY LOCATIONS SHALL BE AS SHOWN ON THE IMPROVEMENT PLANS WITH CENTERLINE STATIONING. THE MINIMUM CONCRETE THICKNESS SHALL BE 6 INCHES THROUGHOUT (WITH A MAXIMUM APPROACH SLOPE OF 1-1/4 INCHES PER FOOT UNLESS OTHERWISE PERMITTED)
2. ALL DRIVEWAY OR COMMON ACCESS ROAD SECTIONS IN EXCESS OF 15 LONGITUDINAL SLOPE MUST BE PAVED WITH A MINIMUM 2-INCH ASPHALT LIFT OR FULL DEPTH CONCRETE LIFT PRIOR TO ANY COMBUSTIBLE FRAMING.
3. THE OWNER AND PRIME CONTRACTOR ARE RESPONSIBLE FOR MAINTAINING PROJECT SITE ACCESS AND NEIGHBORHOOD ACCESS FOR EMERGENCY VEHICLES AND LOCAL RESIDENTS.
4. ROADWAYS DESIGNATED AS NOT COUNTY MAINTAINED ROADS AS SHOWN ON THE PLAN WILL NOT BE ELIGIBLE FOR COUNTY MAINTENANCE UNTIL THE ROADWAYS ARE IMPROVED (AT NO COST TO THE COUNTY) TO THE PUBLIC MAINTENANCE ROAD STANDARDS APPROVED BY THE BOARD OF SUPERVIS ORS AND IN EFFECT AT SUCH TIME THAT THE ROADWAYS ARE CONSIDERED FOR ACCEPTANCE INTO THE COUNTY'S ROAD SYSTEM.
5. ALL WORK IN THE COUNTY ROAD RIGHT-OF-WAY REQUIRES AN ENCROACHMENT PERMIT FROM THE ROADS AND AIRPORTS DEPARTMENT. EACH INDIVIDUAL ACTIVITY REQUIRES A SEPARATE PERMIT - I.E. CABLE, ELECTRICAL, GAS, SEWER. WATER. RETAINING WALLS, DRIVEWAY APPROACHES, FENCES, LANDSCAPING, TREE REMOVAL. STORM DRAINAGE IMPROVEMENTS, ETC.
6. THE DRIVEWAY WIDTH WILL BE MAINTAINED AT 12'-0" MINIMUM AND A CLEAR HEIGHT OF 13'-6"
7. DRIVEWAY AND ACCESS ROAD, FIRE DEPARTMENT ACCESS, WILL BE OF ROUGHENED CONCRETE CAPABLE OF HOLDING 75,000 LBS.

FIRE SPRINKLER SYSTEM SUBMITTAL
1. RESIDENTIAL FIRE SPRINKLERS SYSTEM WILL BE A DEFERRED SUBMITTAL. THE HOME WILL BE EQUIPPED WITH A WET PIPE SPRINKLER SYSTEM.

STREET LIGHTING
1. PACIFIC GAS & ELECTRIC ELECTROLIER SERVICE FEE SHALL BE PAID BY THE DEVELOPER AND/OR HIS AUTHORIZED REPRESENTATIVE.

SANITARY SEWER
1. THE SANITARY SEWER AND WATER UTILITIES SHOWN ON THESE PLANS ARE NOT PART OF THIS GRADING PERMIT AND ARE SHOWN FOR REFERENCE ONLY.
2. ALL MATERIALS AND METHODS OF CONSTRUCTION OF SANITARY SEWERS SHALL CONFORM TO THE SPECIFICATIONS OF THE JURISDICTION INVOLVED. INSPECTION OF SANITARY SEWER WORK SHALL BE DONE BY SAID JURISDICTION.

PORTLAND CEMENT CONCRETE
1. CONCRETE USED FOR STRUCTURAL PURPOSES SHALL BE CLASS "A" (6 SACK PER CUBIC YARD) AS SPECIFIED IN THE STATE STANDARD SPECIFICATIONS. CONCRETE PLACED MUST DEVELOP A MINIMUM STRENGTH FACTOR OF 2800 PSI IN A SEVEN-DAY PERIOD. THE CONCRETE MIX DESIGN SHALL BE UNDER THE CONTINUAL CONTROL OF THE COUNTY INSPECTOR.

AIR QUALITY, LANDSCAPING AND EROSION CONTROL
1. WATER ALL ACTIVE CONSTRUCTION AREAS AT LEAST TWICE DAILY.
2. COVER ALL TRUCKS HAUUNG SOIL, SAND, AND OTHER LOOSE MATERIALS OR REQUIRE ALL TRUCKS TO MAINTAIN AT LEAST TWO FEET OF FREEBOARD.
3. PAVE, APPLY WATER THREE TIMES DAILY, OR APPLY (NON-TOXIC) SOIL STABILIZERS ON ALL UNPAVED ACCESS ROADS, PARKING AREAS AND STAGING AREAS AT CONSTRUCTION SITES.
4. SWEEP DAILY (WTH WATER SWEEPERS) ALL PAVED ACCESS ROADS, PARKING AREAS AND STAGING AREAS AT CONSTRUCTION SITES. T HE USE OF DRY POWDER SWEEPING IS PROHIBITED.
5. SWEEP STREETS DAILY (WITH WATER SWEEPERS) IF VISIBLE SOIL MATERIAL IS CARRIED ONTO ADJACENT PUBUC STREETS. THE USE OF DRY POWDER SWEEPING IS PROHIBITED.
6. ALL CONSTRUCTION VEHICLES, EQUIPMENT AND DELIVERY TRUCKS SHALL HAVE A MAXIMUM IDUNG TIME OF 5 MINUTES (AS REQUIRED BY THE CALIFORNIA AIRBORNE TOXIC CONTROL MEASURE TITLE 13. SECTION 2485 OF CALIFORNIA CODE OF REGULATIONS (CCR)). ENGINES SHALL BE SHUT OFF IF CONSTRUCTION REQUIRES LONGER IDLING TIME UNLESS NECESSARY FOR PROPER OPERATION OF THE VEHICLE.
7. ALL VEHICLE SPEEDS ON UNPAVED ROADS SHALL BE UMITED TO 15 MILES PER HOUR
8. ALL CONSTRUCTION EQUIPMENT SHALL BE MAINTAINED AND PROPERLY TUNED IN ACCORDANCE WITH MANUFACTURER'S SPECIFICATIONS. ALL EQUIPMENT SHALL BE CHECKED BY A CERTIFIED MECHANIC AND DETERMINED TO BE RUNNING IN PROPER CONDITION PRIOR TO OPERATION.
9. POST A SIGN THAT IS AT LEAST 32 SQUARE FEET MINIMUM 2 INCHES LETTER HEIGHT VISIBLE NEAR THE ENTRANCE OF CONSTRUCTION SITE THAT IDENTIFIES THE FOLLOWING RE QUIREMENTS. OBTAIN ENCROACHMENT PERMIT FOR SIGN FROM ROADS DEPARTMENT OR OTHER APPLICABLE AGENCY IF REQUIRED.
   a. 15 MILES PER HOUR (MPH) SPEED LIMIT
   b. 5 MINUTES MAXIMUM IDLING TIME OF VEHICLES
   c. TELEPHONE NUMBER TO CONTACT THE BAY AREA AIR QUALITY MANAGEMENT DISTRICT REGARDING DUST COMPLAINTS. NOTE PHONE NUMBER OF THE BAY AREA AIR QUAUTY MANAGEMENT DISTRICT AIR POLLUTION COMPLAIN HOTLINE OF 1-800-334-6367.
10. ALL FILL SLOPES SHALL BE COMPACTED AND LEFT IN A SMOOTH AND RRM CONDITION CAPABLE OF WITHSTANDING WEATHERING.
11. ALL EXPOSED DISTURBED AREAS SHALL BE SEEDED WTH BROME SEED SPREAD AT THE RATE OF 5 LB. PER 1000 SQUARE FEET (OR APPROVED EQUAL). SEEDING AND WATERING SHALL BE MAINTAINED AS REQUIRED TO ENSURE GROWTH.
12. ALL DITCHES SHALL BE LINED PER COUNTY STANDARD SD8.
13. ALL STORM DRAINAGE STRUCTURES SHALL BE INSTALLED WITH EFFECTIVE ENTRANCE & OUTFALL EROSION CONTROLS E.G. SACKED CONCRETE RIP-RAP. ENERGY DISSIPATERS SHALL BE INSTALLED AT ALL DITCH OUTFALLS. WHERE OUTFALLS ARE NOT INTO AN EXISTING CREEK OR WATER COURSE. RUNOFF SHALL BE RELEASED TO SHEET FLOW.
14. PRIOR TO GRADING COMPLETION AND RELEASE OF THE BOND. ALL GRADED AREAS SHALL BE RESEEDED IN CONFORMANCE \MTH THE COUNTY GRADING ORDINANCE TO MINIMIZE THE VISUAL IMPACTS OF THE GRADE SLOPES AND REDUCE THE POTENTIAL FOR EROSION OF THE SUBJECT SITE.
15. PERMANENT LANDSCAPING SHOWN ON THE ATTACHED LANDSCAPE PLAN MUST BE INSTALLED AND HELD APPROVED BY THE COUNTY PLANNING OFFICE PRIOR TO FINAL APPROVAL BY THE COUNTY ENGINEER, AND FINAL OCCUPANCY RELEASE BY THE BUILDING INSPECTION OFFICE.
16. THE OWNER SHALL PREPARE AND PRESENT A WINTERIZATION REPORT TO THE COUNTY INSPECTOR FOR REVIEW PRIOR TO OCTOBER 15TH OF EVERY YEAR.
17. THE OWNER, CONTRACTOR, AND ANY PERSON PERFORMING CONSTRUCTION ACTIVITIES SHALL INSTALL AND MAINTAIN CONSTRUCTION BEST MANAGEMENT PRACTICES (BMPS) ON THE PROJECT SITE AND WTHIN THE SANTA CLARA COUNTY ROAD RIGHT-OF-WAY THROUGHOUT THE DURATION OF THE CONSTRUCTION AND UNTIL THE ESTABLISHMENT OF PERMANENT STABILIZATION AND SEDIMENT CONTROL TO PREVENT THE DISCHARGE OF POLLUTANTS INCLUDING SEDIMENT, CONSTRUCTION MATERIALS, EXCAVATED MATERIALS, AND WASTE INTO THE SANTA CLARA COUNTY RIGHT-OF-WAY, STORM SEWER WATERWAYS, ROADWAY INFRASTRUCTURE. BMPS SHALL INCLUDE, BUT NOT BE UMITED TO THE FOLLOWING:
   a. PREVENTION OF POLLUTANTS IN STORM WATER DISCHARGES FROM THE CONSTRUCTION SITE AND THE CONTRACTOR'S MATERIAL AND EQUIPMENT LAY-DOWN / STAGING AREAS.
   b. PREVENTION OF TRACKING OF MUD, DIRT, AND CONSTRUCTION MATERIALS ONTO THE PUBLIC ROAD RIGHT-OF-WAY.
   c. PREVENTION OF DISCHARGE OF WATER RUN-OFF DURING DRY AND WET WEATHER CONDITIONS ONTO THE PUBUC ROAD RIGHT-OF-WAY.
18. THE OWNER, CONTRACTOR, AND ANY PERSON PERFORMING CONSTRUCTION ACTIVITIES SHALL ENSURE THAT ALL TEMPORARY CONSTRUCTION FACILITIES, INCLUDING BUT NOT LMITED TO CONSTRUCTION MATERIALS, DELIVERIES, HAZARDOUS AND NON-HAZARDOUS MATERIAL STORAGE, EQUIPMENT, TOOLS, PORTABLE TOILETS, CONCRETE WASHOUT, GARBAGE CONTAINERS, LAYDOWN YARDS, SECONDARY CONTAINMENT AREAS, ETC. ARE LOCATED OUTSIDE THE SANTA CLARA COUNTY ROAD RIGHT-OF-WAY.
19. EROSION CONTROL PLAN IS A GUIDE AND SHALL BE AMENDED AS NECESSARY TO PREVENT EROSION AND ILLICIT DISCHARGES ON A YEAR AROUND BASIS, DEPENDING ON THE SEASON, WEATHER, AND HELD CONDITIONS. EROSION CONTROL MEASURES IN ADDITION TO THOSE NOTED IN THE PERMITTED PLANS MAY BE NECESSARY. FAILURE TO INSTALL SITE AND SITUATIONALY APPROPRIATE EROSION CONTROL MEASURES MAY RESULT IN VIOLATIONS, FINES, AND A STOPPAGE OF WORK.

STORM DRAINAGE AND STORMWATER MANAGEMENT
1. DEVELOPER IS RESPONSIBLE FOR ALL NECESSARY DRAINAGE FACILITIES WHETHER SHOWN ON THE PLANS OR NOT AND HE OR HIS SUCCESSOR PROPERTY OWNERS ARE RESPONSIBLE FOR THE ADEQUACY AND CONTINUED MAINTENANCE OF THESE FACILITIES IN A MANNER WHICH WILL PRECLUDE ANY HAZARD TO LIFE, HEALTH, OR DAMAGE TO ADJOINING PROPERTY, CONSISTENT WITH NPDES PERMIT CAS612008 / ORDER NO. R2-2009-0047 AND NPDES PERMIT CAS000004/ ORDER NO. 2013-0001-DWQ.
2. DROP INLETS SHALL BE COUNTY STANDARD TYPE 5 UNLESS OTHERWISE NOTED ON THE PLANS. THE DEVELOPER'S ENGINEER SHALL BE RESPONSIBLE FOR THE PROPER LOCATION OF DROP INLETS. WHERE STREET PROFILE GRADE EXCEEDS 6% DROP INLETS SHALL BE SET AT 500 ANGLE CURB LINE TO ACCEPT WATER OR AS SHOWN ON THE PLANS.
3. WHERE CULVERTS ARE INSTALLED THE DEVELOPER SHALL BE RESPONSIBLE FOR GRADING THE OUTLET DITCH TO DRAIN TO AN EXISTING SWALE OR TO AN OPEN AREA FOR SHEET FLOW.
4. UPON INSTALLATION OF DRIVEWAY CONNECTIONS, PROPERTY OWNERS SHALL PROVIDE FOR THE UNINTERRUPTED FLOW OF WATER IN ROADSIDE DITCHES.
5. THE COUNTY SHALL INSPECT UNDERGROUND DRAINAGE IMPROVEMENTS AND STORMWATER MANAGEMENT FEATURES PRIOR TO BACKFILL

NOTES
1. BEARINGS SHOWN ARE BASED ON THE SOUTH LINE OF THE WILLIAMS & PALMER PARCEL AS SHOWN ON THAT MAP THEREOF FILED IN BOOK "O" OF MAPS AT PAGE 80, SANTA CLARA COUNTY RECORDS.
2. BEARING BENCHMARK: TOP OF MAG NAIL AT NORTHEAST PROPERTY CORNER. ELEVATION = 1890.02 (ASSUMED)
3. A SEPTIC SYSTEM DESIGN FOR THIS PROJECT HAS BEEN PREPARED AND SHALL BE INCLUDED WITH THE SUBMITTAL OF THIS PLAN.

GEOTECHNICAL ENGINEER OBSERVATION
A CONSTRUCTION OBSERVATION LETTER FROM THE RESPONSIBLE GEOTECHNICAL ENGINEER AND ENGINEERING GEOLOGIST DETAILING CONSTRUCTION OBSERVATIONS AND CERTIFYING THAT THE WORK WAS DONE IN ACCORDANCE WITH THE RECOMMENDATIONS IN THE GEOTECHNICAL AND GEOLOGIC REPORTS SHALL BE SUBMITTED PRIOR TO THE GRADING COMPLETION AND RELEASE OF THE BOND.

LOT COVERAGE
APN544-23-041 LOT AREA	55,568.74 ft2
NET LOT AREA	35,017.96 ft2
BUILDING FOOTPRINT	3968 ft2
PERCENTAGE OF THE LOT COVERED BY BUILDINGS	7.14%
PERCENTAGE OF NET LOT AREA COVERED BY BUILDINGS	11.33%
APN544-23-042 LOT AREA	47,417.74 ft2
NET LOT AREA	39,327.08 ft2
PRIMARY RESIDENCE BUILDING FOOTPRINT	3,545 ft2
GUEST HOUSE BUILDING FOOTPRINT	435 ft2
PERCENTAGE OF THE LOT COVERED BY BUILDINGS	8.39%
PERCENTAGE OF NET LOT AREA COVERED BY BUILDINGS	10.12%

AS-BUILT PLANS STATEMENT

THIS IS A TRUE COPY OF THE AS-BUILT PLANS. THERE (WERE)(WERE NOT) MINOR FIELD CHANGES MARKED WITH THE SYMBOL (*). THERE (WERE)(WERE NOT) PLAN REVISIONS INDICATING SIGNIFICANT CHANGES REVIEWED BY THE COUNTY ENGINEER AND MARKED WITH THE SYMBOL A.

DATE________________ SIGNATURE________________

NOTE: THIS STATEMENT IS TO BE SIGNED BY THE PERSON AUTHORIZED BY THE COUNTY ENGINEER TO PERFORM THE INSPECTION WORK. A REPRODUCIBLE COPY OF THE AS-BUILT PLANS MUST BE FURNISHED TO THE COUNTY ENGINEER AFTER CONSTRUCTION

COUNTY OF SANTA CLARA DEPT. OF ROADS AND AIRPORTS

ISSUED BY:________________________DATE:______________
ENCROACHMENT PERMIT NO. ______________________________

NO WORK SHALL BE DONE IN THE COUNTY'S RIGHT-OF-WAY WITHOUT AN ENCROACHMENT PERMIT, INCLUDING THE STAGING OF CONSTRUCTION MATERIAL AND THE PLACEMENT OF PORTABLE TOILETS

ENGINEER'S STATEMENT

I HEREBY STATE THAT THESE PLANS ARE IN COMPLIANCE WITH ADOPTED COUNTY STANDARDS, THE APPROVED TENTATIVE MAP (OR PLAN) AND CONDITIONS PERTAINING THERETO DATED JAN 7, 2015, FILE(S) NO. 10382-14BA, 10383-14BA, 6929-14BA and 10621-14G-14EA
BSA DATE: 24 FEBRUARY, 2022
DATE: 24/02/22

COUNTY OF SANTA CLARA LAND DEVELOPMENT ENGINEERING & SURVEYING

GRADING / DRAINAGE PERMIT NO. ______________________
ISSUED BY:____________________ DATE:______________

COUNTY ENGINEER'S NOTE

ISSUANCE OF A PERMIT AUTHORIZING CONSTRUCTION DOES NOT RELEASE THE DEVELOPER, PERMITTEE OF ENGINEER FROM RESPONSIBILITY FOR THE CORRECTION OF ERRORS OR OMISSIONS CONTAINED IN THE PLANS. IF, DURING THE COURSE OF CONSTRUCTION, THE PUBLIC INTEREST REQUIRES A MODIFICATION OF (OR DEPARTURE FROM) THE SPECIFICATIONS OF THE PLANS, THE COUNTY SHALL HAVE THE AUTHORITY TO REQUIRE THE SUSPENSION OF WORK, AND THE NECESSARY MODIFICATION OR DEPARTURE AND TO SPECIFY THE MANNER IN WHICH THE SAME IS TO BE MADE.

DATE:______________________

SIGNATURE: ________________

R.C.E NUMBER:______________
EXPIRATION DATE:__________________

GIST RD. SFR 1
APN544-23-041; PROPOSED ADDRESS: 20555
GIST RD, LOS GATOS, CA 95033

REVISION HISTORY

S3DA Structural & Architectural Design
4196 Adams Ave. San Diego CA 92116
(619) 404-0220

Mr. Nader Moavenian
nader.m@s3da-design.com

Civil Engineer: Joanne C. Singer, P.E.

REGISTERED PROFESSIONAL ENGINEER
JOANNE C. SINGER
C 26900
3/31/2021
CIVIL
STATE OF CALIFORNIA

STAMP

1. The contractor must check all dimensions on-site before commencing work

2. These drawings are to be read in conjunction with all relevant designer, engineer or specialist drawings and specifications

3. The contractor is responsible for providing all necessary temporary support to the building and any adjacent structures

COUNTY APPROVAL STAMP

REVISION DATE
01/02/21

DRAWING NAME
010 Civil. Cover sheet

Drawing Scale

C-0

VICINITY MAP

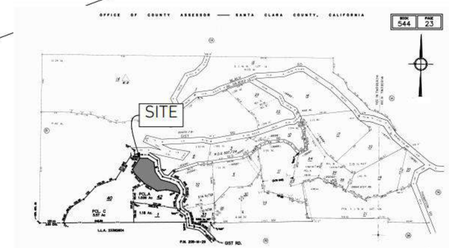

ASSESSOR'S PARCEL MAP

GIST RD. SFR 1

APN544-23-041; PROPOSED ADDRESS: 20555 GIST RD, LOS GATOS, CA 95033

REVISION HISTORY

S3DA Structural & Architectural Design
4196 Adams Ave. San Diego CA 92116
(619) 404-0220

Mr. Nader Moavenian
nader.m@s3da-design.com

Civil Engineer: Joanne C. Singer, P.E.

REGISTERED PROFESSIONAL ENGINEER
JOANNE C. SINGER
C 26900
3/31/2021
CIVIL
STATE OF CALIFORNIA

STAMP

1. The contractor must check all dimensions on-site before commencing work

2. These drawings are to be read in conjunction with all relevant designer, engineer or specialist drawings and specifications

3. The contractor is responsible for providing all necessary temporary support to the building and any adjacent structures

COUNTY APPROVAL STAMP

REVISION DATE
01/02/21

DRAWING NAME
011 Subdivision site plan. Existing features

Drawing Scale
1:300

C-1

VICINITY MAP

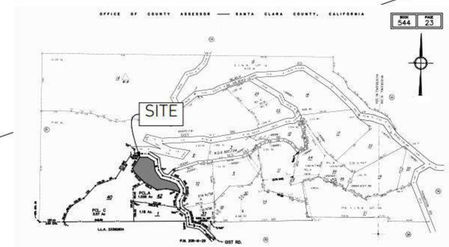

ASSESSOR'S PARCEL MAP

GIST RD. SFR 1

APN544-23-041; PROPOSED ADDRESS: 20555 GIST RD, LOS GATOS, CA 95033

REVISION HISTORY

S3DA Structural & Architectural Design
4196 Adams Ave, San Diego CA 92116
(619) 404-0220

Mr. Nader Moavenian
nader.m@s3da-design.com

Civil Engineer: Joanne C. Singer, P.E.

REGISTERED PROFESSIONAL ENGINEER
JOANNE C. SINGER
C 26900
3/31/2021
CIVIL
STATE OF CALIFORNIA

STAMP

1. The contractor must check all dimensions on-site before commencing work

2. These drawings are to be read in conjunction with all relevant designer, engineer or specialist drawings and specifications

3. The contractor is responsible for providing all necessary temporary support to the building and any adjacent structures

COUNTY APPROVAL STAMP

REVISION DATE
01/02/21

DRAWING NAME
012 APN544-23-041 site plan. Existing features

1" = 20'

C-1.1

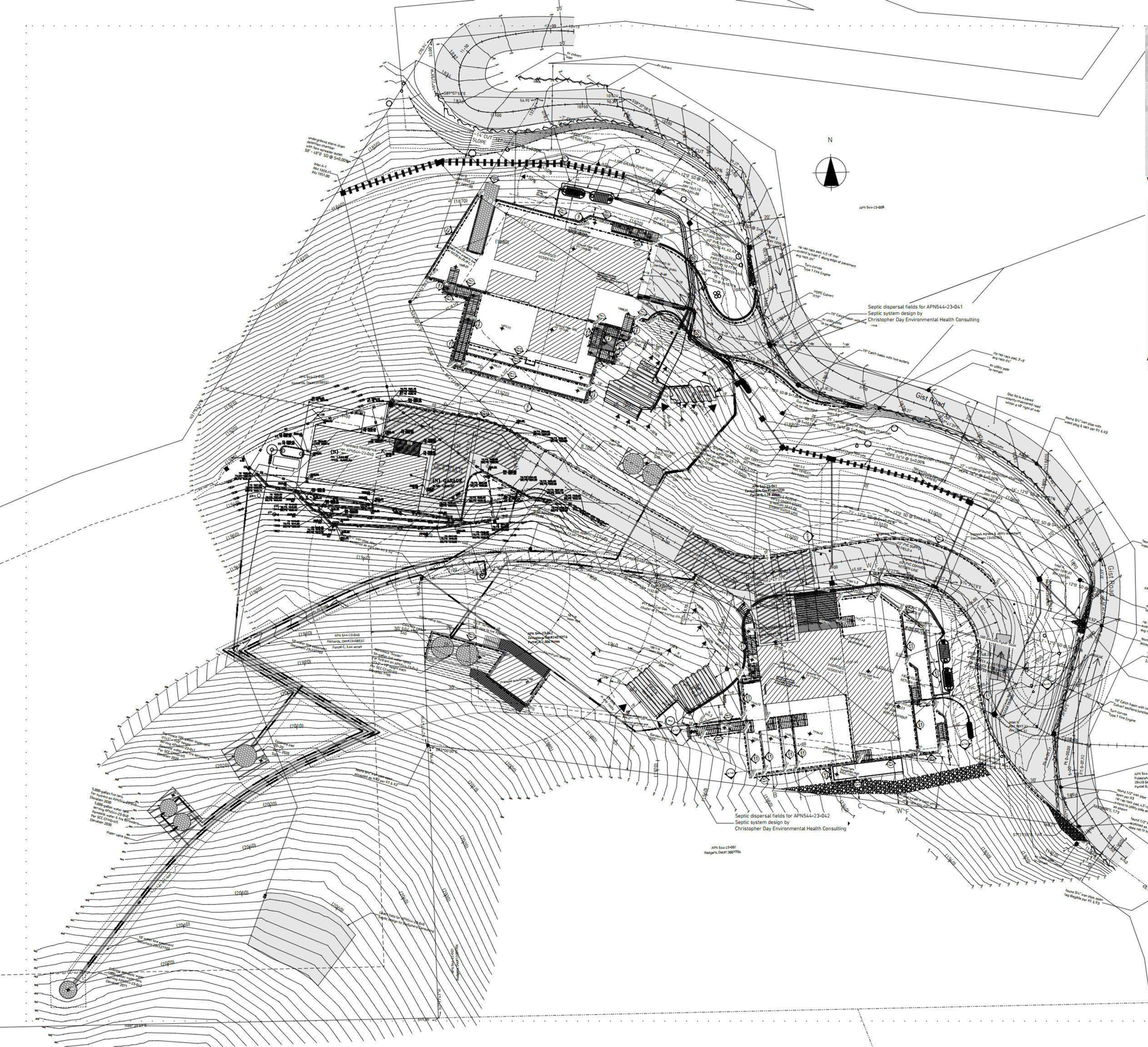

GIST RD. SFR 1

APN544-23-041; PROPOSED ADDRESS: 20555 GIST RD, LOS GATOS, CA 95033

REVISION HISTORY

S3DA Structural & Architectural Design
4196 Adams Ave. San Diego CA 92116
(619) 404-0220

Mr. Nader Moavenian
nader.m@s3da-design.com

Civil Engineer: Joanne C. Singer, P.E.

REGISTERED PROFESSIONAL ENGINEER
JOANNE C. SINGER
C 26900
3/31/2021
CIVIL
STATE OF CALIFORNIA

STAMP

1. The contractor must check all dimensions on-site before commencing work

2. These drawings are to be read in conjunction with all relevant designer, engineer or specialist drawings and specifications

3. The contractor is responsible for providing all necessary temporary support to the building and any adjacent structures

COUNTY APPROVAL STAMP

REVISION DATE
01/02/21

DRAWING NAME
013 Subdivision site plan. Proposed developments

1:300

C-2

LOT COVERAGE

APN544-23-041 LOT AREA	55,568.74 ft2
NET LOT AREA	35,017.96 ft2
BUILDING FOOTPRINT	3968 ft2
PERCENTAGE OF THE LOT COVERED BY BUILDINGS	7.14%
PERCENTAGE OF NET LOT AREA COVERED BY BUILDINGS	11.33%
APN544-23-042 LOT AREA	47,417.74 ft2
NET LOT AREA	39,327.08 ft2
PRIMARY RESIDENCE BUILDING FOOTPRINT	3,545 ft2
GUEST HOUSE BUILDING FOOTPRINT	435 ft2
PERCENTAGE OF THE LOT COVERED BY BUILDINGS	8.39%
PERCENTAGE OF NET LOT AREA COVERED BY BUILDINGS	10.12%

GIST RD. SFR 1

APN544-23-041; PROPOSED ADDRESS: 20555 GIST RD, LOS GATOS, CA 95033

REVISION HISTORY

S3DA Structural & Architectural Design
4196 Adams Ave. San Diego CA 92116
(619) 404-0220

Mr. Nader Moavenian
nader.m@s3da-design.com

Civil Engineer: Joanne C. Singer, P.E.

REGISTERED PROFESSIONAL ENGINEER
JOANNE C. SINGER
C 26900
3/31/2021
CIVIL
STATE OF CALIFORNIA

STAMP

1. The contractor must check all dimensions on-site before commencing work

2. These drawings are to be read in conjunction with all relevant designer, engineer or specialist drawings and specifications

3. The contractor is responsible for providing all necessary temporary support to the building and any adjacent structures

COUNTY APPROVAL STAMP

REVISION DATE
01/02/21

DRAWING NAME
014 APN544-23-041 site plan. Proposed developments

C-2.1

MH engineering Co.
16075 Vineyard Blvd. Morgan Hill, CA 95037 (408) 779-7381

Date: 2/22/2016 Job#: 212091
To:
Craig Farley
Fire Inspector
South Santa Clara County Fire Department
Fire Station 2
10810 No Name Uno
Gilroy, CA 95020
408.500.1000
craig.farley@fire.ca.gov

From:
Allen Andrade RCE 58384
MH engineering
16075 Vineyard Blvd.
Morgan Hill, CA 95037
408.779.7381 ext 228
allena@mhengineering.com

Regarding: County Files 10382, 10383, 6929, and 10621
John & Elizabeth Knights, Gist Road, Los Gatos
APNs 554-23-002,003, & 036

The existing terrain in the project area requires the use of driveway slopes in excess of 16% for the common driveway serving APNs 554-23-002 & 036. The project design does have a section of this driveway approximately 180 feet long that exceeds 16% (maximum slope of 19.4%). In order to mitigate potential fire access issues due to this exceedance of the 15% slope the project intends on installing a roughened concrete surface for improved traction on all areas of the driveway where the slope is in excess of 16%. The project will also provide 5,000 gallons of extra fire water storage because of the remote location.

Attached for your reference is the current staff report for the project in which condition 25D on pages 22, 43, 62 relates to the above.

The applicant appreciates your consideration of this request to approve the fire access to the project with driveway slopes in excess of 16% with the understanding that the portions of the driveway steeper than 16% will be paved with a roughened concrete surface and an extra 5,000 gallons of fire water storage will be provided.

Please notify me if you have any questions or need any additional information.

Thank you,
Allen Andrade, RCE 58384
MH engineering

L:\Projects2010\212091\212091 Fire Access Letter (02-22-2016).docx
2/22/2016

Page 1 of 1

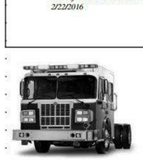

Metro Star®

Available in ER, LTD, SMFD, MFD, EMFD, LFD, and ELFD cab styles.

- 94" wide aluminum cab
- 380-450 hp
- Seats up to 10
- IFS or Spring Front Suspension
- 42° - 53° Cramp Angle
- 270 - 360 Amp Alternator
- 136" - 303.5" Wheelbase

Metro Star RT®

Designed for Ambulances and Rescue Transport Vehicles. Available in LTD, SMFD & MFD cab styles.

- 94" wide aluminum cab
- 380-450 hp
- Seats up to 6
- Lighter axles ratings with annealing rear air suspension
- 50° Cramp Angle
- 270-360 Amp Alternator
- Several wheelbase options

TYPE 1 FIRE ENGINE by Metro Star; LOCAL ENGINE 2011

NOTES:

1. Driveway and access road, Fire Department Access, will be of "all weather material" (roughened concrete) capable of holding 75,000 lbs.
2. The driveway width will be maintained at 12'-0" minimum and a clear height of 13'-6".

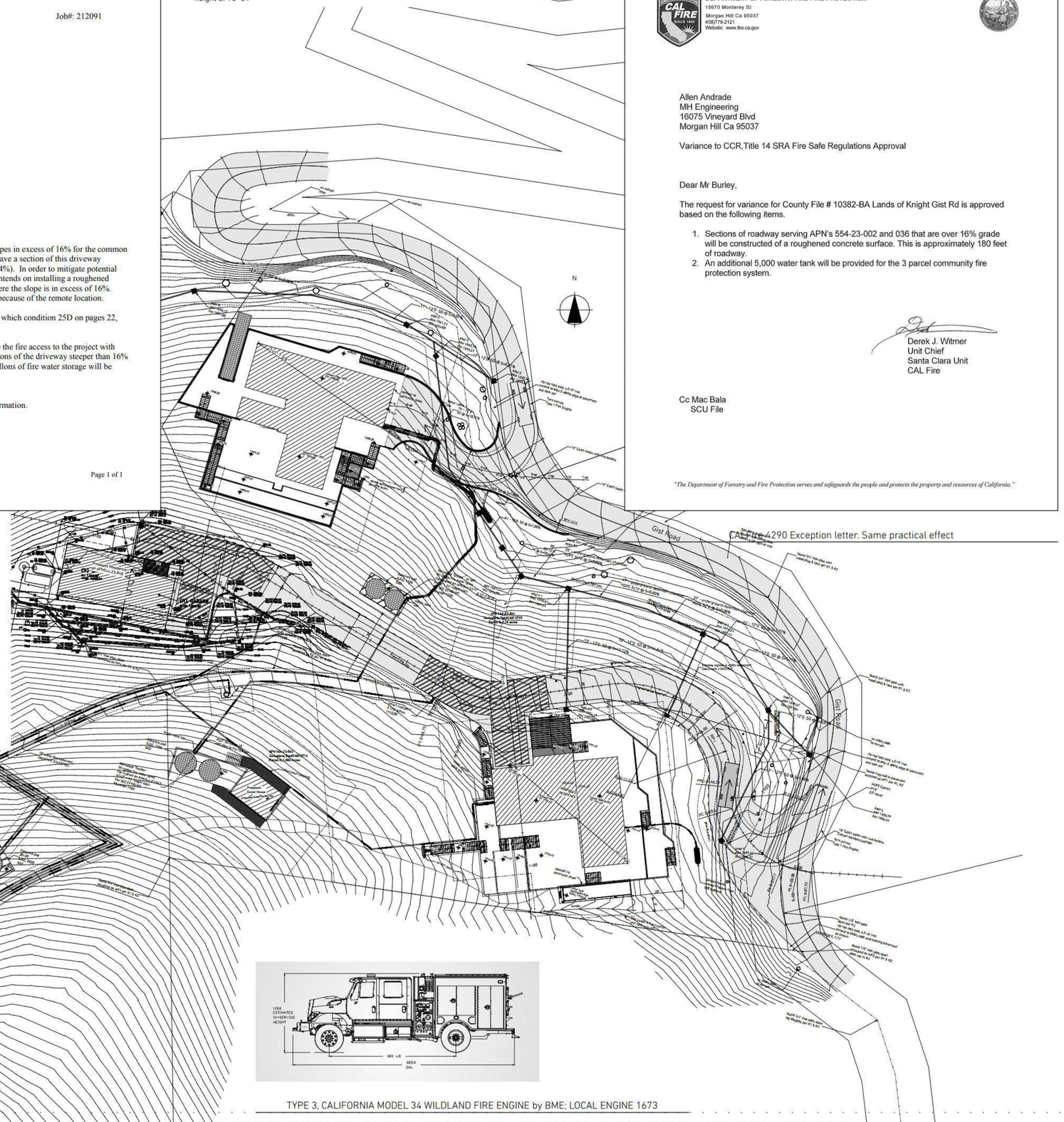

TYPE 3, CALIFORNIA MODEL 34 WILDLAND FIRE ENGINE by BME; LOCAL ENGINE 1673

STATE OF CALIFORNIA—NATURAL RESOURCES AGENCY Edmund G. Brown Jr., Governor

DEPARTMENT OF FORESTRY AND FIRE PROTECTION
15670 Monterey St
Morgan Hill Ca 95037
408)779-2121
Website: www.fire.ca.gov

Allen Andrade
MH Engineering
16075 Vineyard Blvd
Morgan Hill Ca 95037

Variance to CCR,Title 14 SRA Fire Safe Regulations Approval

Dear Mr Burley,

The request for variance for County File # 10382-BA Lands of Knight Gist Rd is approved based on the following items.

1. Sections of roadway serving APN's 554-23-002 and 036 that are over 16% grade will be constructed of a roughened concrete surface. This is approximately 180 feet of roadway.
2. An additional 5,000 water tank will be provided for the 3 parcel community fire protection system.

Derek J. Witmer
Unit Chief
Santa Clara Unit
CAL Fire

Cc Mac Bala
SCU File

"The Department of Forestry and Fire Protection serves and safeguards the people and protects the property and resources of California."

CALFire 4290 Exception letter. Same practical effect

FIRE PROTECTION MEASURES

COMMON ACCESS DRIVEWAY OF ROUGHENED SURFACE CONCRETE RATED 75,000 LBS, MIN WIDTH 20 FT

COMMON ACCESS DRIVEWAY IS DESIGNED TO ACCOMMODATE TYPE 1 AND TYPE 3 FIRE ENGINES: COMMON TYPES OF FIRE ENGINES MOST LIKELY TO BE DEPLOYED IN THE AREA IN CASE OF FIRE. THE DRIVEWAY WILL BE OF ALL-WEATHER MATERIAL (ROUGHENED-SURFACE CONCRETE) CAPABLE OF HOLDING 75,000LBS. MIN WIDTH OF THE DRIVEWAY IS 20 FEET.

68,920 GALLONS OF WATER

- **a)** 25,000 GALLONS OF DEDICATED FIRE PROTECTION WATER STORAGE:
  - i. 10,000 GALLONS IN TWO TANKS FOR APN544-23-042
  - ii. 10,000 GALLONS IN TWO TANKS FOR APN544-23-041
  - iii. 5,000 GALLONS IN ONE TANK FOR APN544-23-040
- **b)** 23,920 GALLONS IN ALTERNATIVE WATER SOURCES:
  - i. 11,960 GALLONS ALTERNATIVE WATER SOURCE FOR APN544-23-041 STORED IN METAL ABOVE-GROUND SHIPPING CONTAINER TANK
  - ii. 11,960 GALLONS ALTERNATIVE WATER SOURCE FOR APN544-23-041 STORED IN METAL ABOVE-GROUND SHIPPING CONTAINER TANK
- **c)** 20,000 GALLONS OF DOMESTIC-USE WATER CONNECTED TO FIRE SPRINKLER SYSTEMS:
  - i. 5,000 GALLON TANK FOR APN544-23-042
  - ii. 10,000 GALLON TANK FOR APN544-23-041
  - iii. 5,000 GALLON TANK FOR APN544-23-040

TOTAL STORED WATER AVAILABILITY FOR THREE LOTS IS THEREFORE ESTIMATED TO BE ~68,920 GALLONS AT ANY GIVEN TIME.

- **PRODUCTIVE WATER WELL**
  EXISTING WELL YIELDS 14.5 GALLONS OF WATER PER MINUTE AS TESTED ON NOVEMBER 21, 2019.

- **TWO FIRE TURNAROUNDS**

1. TWO FIRE TURNAROUNDS HAVE BEEN DESIGNED PER SANTA CLARA COUNTY SD-16 STANDARD ON THE COMMON ACCESS DRIVEWAY SERVING APN544-23-042 & 040 200 FEET AND 385 FEET RESPECTIVELY FROM EDGE OF GIST RD AS MEASURED ALONG THE PATH OF TRAVEL ON THE COMMON ACCESS DRIVEWAY FOR APN544-23-042 & 040. SEE C-4 FOR DETAILS.
2. ACCESS DRIVEWAY FOR APN544-23-041 IS DESIGNED TO FACILITATE A POSSIBLE TURNAROUND FOR A TYPE 1 OR A TYPE 3 FIRE ENGINE TRAVELING ON GIST RD. SEE C-5 FOR DETAILS

THREE WHARF HYDRANTS

EACH PROPERTY HAS A WHARF HYDRANT CONNECTED TO DEDICATED FIRE PROTECTION WATER STORAGE TANKS

LANDSCAPE ARCHITECTURE FIRE PROTECTION MEASURES

30-FOOT AND 100-FOOT DEFENSIBLE SPACES

LANDSCAPE ARCHITECTURE DESIGNS FOR ALL PROPERTIES INCORPORATE 30-FOOT DEFENSIBLE ZONES, AND 100-FOOT DEFENSIBLE ZONES PER CURRENT CODE.

ARCHITECTURE AND STRUCTURAL ENGINEERING FIRE PROTECTION MEASURES

TYPE II OCCUPANCY CATEGORY: NON-COMBUSTIBLE

NONCOMBUSTIBLE CONSTRUCTION MATERIALS FOR RESIDENCES ON APN544-23-041 & 042

THE FOLLOWING NON-COMBUSTIBLE MATERIALS ARE TO BE USED:

a. STRUCTURAL MEMBERS: GALVANIZED COLD-ROLLED STEEL
b. STRUCTURAL WALLS AND ROOF: STEEL-SKINNED STRUCTURAL INSULATED PANELS (SIP)
c. EXTERNAL WALL FINISHES: NATURAL STONE PANELS AFFIXED TO VENTILATED FAÇADE STEEL FRAME
d. ROOF: CLASS A TEMPERED GLASS TESLA ROOF
e. RETAINING WALLS: CEMENT CMU BLOCKS AND STRUCTURAL REINFORCED CONCRETE
f. DECKING: ALUMINUM PROFILES FOR ALL DECKING
g. GUARDRAILS: METAL AND TEMPERED GLASS

FIRE SPRINKLER SYSTEMS

WET PIPE FIRE SPRINKLER SYSTEMS TO BE INSTALLED IN ALL PROPOSED RESIDENCES

GIST RD. SFR 1

APN544-23-041; PROPOSED ADDRESS: 20555 GIST RD, LOS GATOS, CA 95033

REVISION HISTORY

S3DA Structural & Architectural Design
4196 Adams Ave. San Diego CA 92116
(619) 404-2220

Mr. Nader Moavenian
nader.m@s3da-design.com

Civil Engineer: Joanne C. Singer, P.E.

REGISTERED PROFESSIONAL ENGINEER
JOANNE C. SINGER
C 26900
3/31/2021
CIVIL
STATE OF CALIFORNIA
STAMP

1. The contractor must check all dimensions on-site before commencing work

2. These drawings are to be read in conjunction with all relevant designer, engineer or specialist drawings and specifications

3. The contractor is responsible for providing all necessary temporary support to the building and any adjacent structures

COUNTY APPROVAL STAMP

REVISION DATE
01/02/21

DRAWING NAME
015 Fire protection measures & infrastructure

1" = 30'

C-3

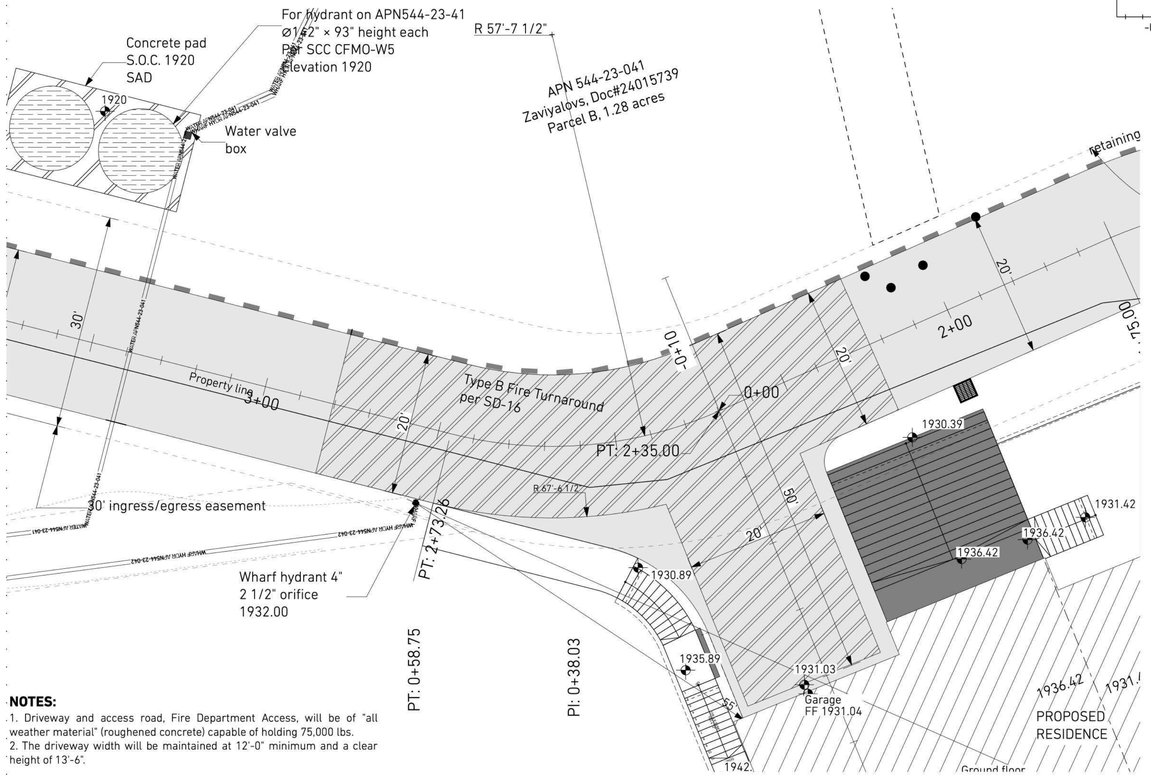

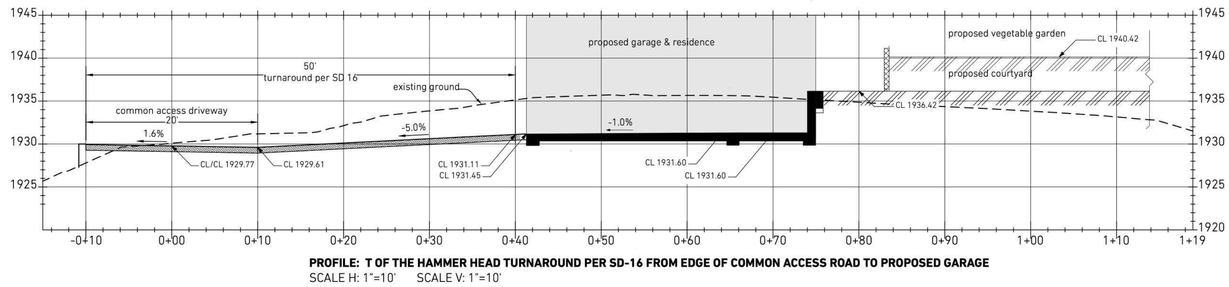

PROFILE: T OF THE HAMMER HEAD TURNAROUND PER SD-16 FROM EDGE OF COMMON ACCESS ROAD TO PROPOSED GARAGE
SCALE H: 1"=10' SCALE V: 1"=10'

FIRE NOTES

1. These plans comply with 2022 California Building Code, 2022 California Fire code and district amendments.
2. Occupancy R-3 & U, type I-B, fully sprinkled. Approved automatic system complying with the edition of NFPA 13D currently adopted in Chapter 35 of the California Building Code is required.
3. The designer/installer must submit two sets of plans, calculations and cut sheets for the underground and overhead residential automatic sprinkler system to the central fire protection district.
4. Address numbers must be posted and maintained as shown on the site plan. Numbers must be a minimum of 4 inches in height and of a color contrasting to their background.
5. Roof coverings must be Class A.
6. Job copies of the building plans and permits must remain on-site during inspections.
7. All significant combustible vegetation must be removed within 30 feet of the structure to minimize risk of wildfire casualty. Appropriate separation of vegetative fuels must be maintained in areas between 30 and 100 feet from the structure.
8. Any electric gates must be equipped with the county fire protection district key entry system.
9. All vent openings to be covered by Wildland Flame and Ember Resistant vents approved and listed by the California State Fire Marshal, or WUI vents listed to ASTM E2886 per Section R337.6.2.
10. Roof gutters to be provided with leaf guards per Section R337.5.4.
11. Underside of the roof eaves is to be finished with an ignition resistant or non-combustible material to comply with WUI requirements of Section R337.7

STATE OF CALIFORNIA—NATURAL RESOURCES AGENCY — Edmund G. Brown Jr., Governor

CAL FIRE SINCE 1885

DEPARTMENT OF FORESTRY AND FIRE PROTECTION
15670 Monteney St
Morgan Hill Ca 95037
408)779-2121
Website: www.fire.ca.gov

Allen Andrade
MH Engineering
16075 Vineyard Blvd
Morgan Hill Ca 95037

Variance to CCR,Title 14 SRA Fire Safe Regulations Approval

Dear Mr Burley,

The request for variance for County File # 10382-BA Lands of Knight Gist Rd is approved based on the following items.

1. Sections of roadway serving APN's 554-23-002 and 036 that are over 16% grade will be constructed of a roughened concrete surface. This is approximately 180 feet of roadway.
2. An additional 5,000 water tank will be provided for the 3 parcel community fire protection system.

Derek J. Witmer
Unit Chief
Santa Clara Unit
CAL Fire

Cc Mac Bala
SCU File

"The Department of Forestry and Fire Protection serves and safeguards the people and protects the property and resources of California."

NOTES:
1. Driveway and access road, Fire Department Access, will be of "all weather material" (roughened concrete) capable of holding 75,000 lbs.
2. The driveway width will be maintained at 12'-0" minimum and a clear height of 13'-6".

DIMENSIONS: FIRE TURNAROUND #1 PER SD-16 1" = 10'

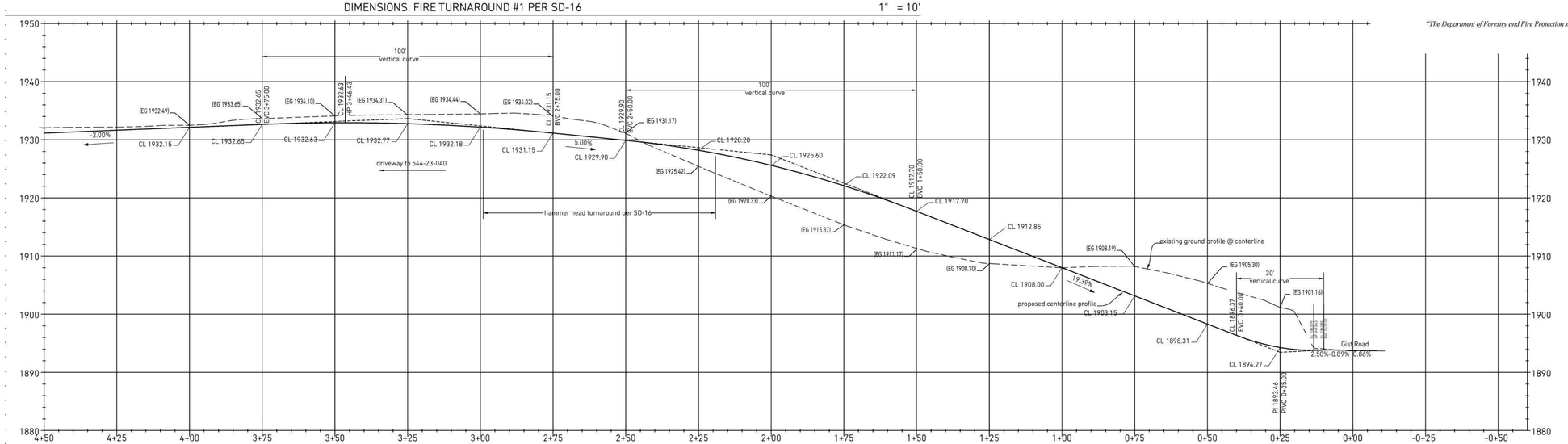

PROFILE: COMMON ACCESS ROAD PLAN
SCALE H: 1"=20' SCALE V: 1"=10'

© MH ENGINEERING INC

GIST RD. SFR 1

APN544-23-041; PROPOSED ADDRESS: 20555 GIST RD, LOS GATOS, CA 95033

REVISION HISTORY

S3DA Structural & Architectural Design
4196 Adams Ave. San Diego CA 92116
(619) 404-0220

Mr. Nader Moavenian
nader.m@s3da-design.com

Civil Engineer: Joanne C. Singer, P.E.

REGISTERED PROFESSIONAL ENGINEER — JOANNE C. SINGER — C 26900 — 3/31/2021 — CIVIL — STATE OF CALIFORNIA — STAMP

1. The contractor must check all dimensions on-site before commencing work

2. These drawings are to be read in conjunction with all relevant designer, engineer or specialist drawings and specifications

3. The contractor is responsible for providing all necessary temporary support to the building and any adjacent structures

COUNTY APPROVAL STAMP

REVISION DATE
01/02/21

DRAWING NAME
016 Fire turnaround per SD-16 for APN 544-23-042

C-4-SD16

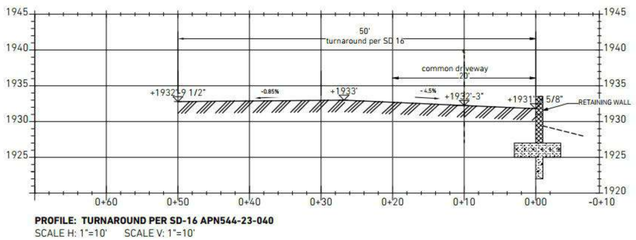

PROFILE: TURNAROUND PER SD-16 APN544-23-040
SCALE H: 1"=10' SCALE V: 1"=10'

544-23-040 SD-16 Turnaround section 1" = 10'

NOTES:
1. Driveway and access road, Fire Department Access, will be of "all weather material" (roughened concrete) capable of holding 75,000 lbs.
2. The driveway width will be maintained at 12'-0" minimum and a clear height of 13'-6".

STATE OF CALIFORNIA—NATURAL RESOURCES AGENCY Edmund G. Brown Jr., Governor

DEPARTMENT OF FORESTRY AND FIRE PROTECTION
15670 Monterey St
Morgan Hill Ca 95037
408)779-2121
Website: www.fire.ca.gov

Allen Andrade
MH Engineering
16075 Vineyard Blvd
Morgan Hill Ca 95037

Variance to CCR,Title 14 SRA Fire Safe Regulations Approval

Dear Mr Burley,

The request for variance for County File # 10382-BA Lands of Knight Gist Rd is approved based on the following items.

1. Sections of roadway serving APN's 554-23-002 and 036 that are over 16% grade will be constructed of a roughened concrete surface. This is approximately 180 feet of roadway.
2. An additional 5,000 water tank will be provided for the 3 parcel community fire protection system.

Derek J. Witmer
Unit Chief
Santa Clara Unit
CAL Fire

Cc Mac Bala
SCU File

"The Department of Forestry and Fire Protection serves and safeguards the people and protects the property and resources of California."

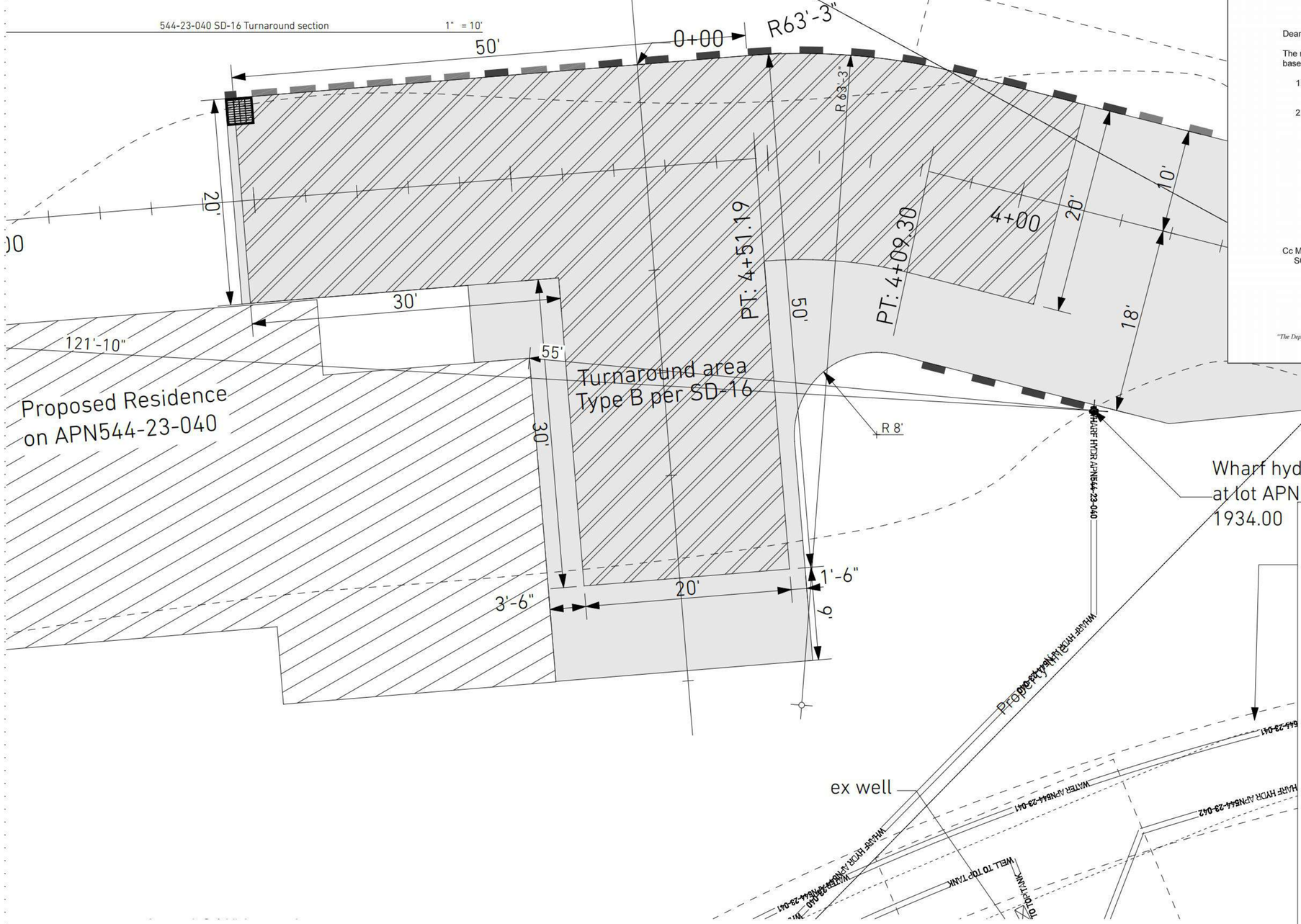

FIRE TURNAROUND PER SD-16 ON APN544-23-040 1" = 5'

FIRE NOTES

1. These plans comply with 2022 California Building Code, 2022 California Fire code and district amendments.
2. Occupancy R-3 & U, type I-B, fully sprinkled. Approved automatic system complying with the edition of NFPA 13D currently adopted in Chapter 35 of the California Building Code is required.
3. The designer/installer must submit two sets of plans, calculations and cut sheets for the underground and overhead residential automatic sprinkler system to the central fire protection district.
4. Address numbers must be posted and maintained as shown on the site plan. Numbers must be a minimum of 4 inches in height and of a color contrasting to their background.
5. Roof coverings must be Class A.
6. Job copies of the building plans and permits must remain on-site during inspections.
7. All significant combustible vegetation must be removed within 30 feet of the structure to minimize risk of wildfire casualty. Appropriate separation of vegetative fuels must be maintained in areas between 30 and 100 feet from the structure.
8. Any electric gates must be equipped with the county fire protection district key entry system.
9. All vent openings to be covered by Wildland Flame and Ember Resistant vents approved and listed by the California State Fire Marshal, or WUI vents listed to ASTM E2886 per Section R337.6.2.
10. Roof gutters to be provided with leaf guards per Section R337.5.4.
11. Underside of the roof eaves is to be finished with an ignition resistant or non-combustible material to comply with WUI requirements of Section R337.7

GIST RD. SFR 1

APN544-23-041; PROPOSED ADDRESS: 20555 GIST RD, LOS GATOS, CA 95033

REVISION HISTORY

S3DA Structural & Architectural Design
4196 Adams Ave. San Diego CA 92116
(619) 404-0220

Mr. Nader Moavenian
nader.m@s3da-design.com

STAMP

1. The contractor must check all dimensions on-site before commencing work
2. These drawings are to be read in conjunction with all relevant designer, engineer or specialist drawings and specifications
3. The contractor is responsible for providing all necessary temporary support to the building and any adjacent structures

COUNTY APPROVAL STAMP

REVISION DATE
01/02/2021

DRAWING NAME
017 Fire turnaround per SD-16 for APN544-23-040

1" = 5', 1" = 10'

C-4.1-SD16

GRADING CUT/FILL QUANTITIES (Cu. Yd.)

SFR 1. APN544-23-041	Cut	Fill	Net
Driveway	85.11	168.82	
Ground floor yard terrace	792.06	387.31	
Container water tank enclosure	41.13	0.00	
Second floor yard terrace	616.05	15.02	
Vegetable garden & camellia terraces	287.02	0.00	
Stone steps West side	86.60	0.00	
Stone steps East side, tea terrace	40.01	0.00	
Butterfly garden and fill behind curved RW	0.00	180.45	
Total quantities	**1947.98**	**751.60**	**1196.38 <Cut>**

GRADING CUT/FILL QUANTITIES (Cu. Yd.)

SFR 2. APN544-23-042	Cut	Fill	Net
Common access road	925.37	607.64	
Common access road berm		217.05	
Garage driveway: stem of T turnaround per SD16	86.92	0.00	
Terraces	696.43		
Ground floor terrace yard area		17.33	
Ground floor slab area		75.68	
Split level/Dining slab terrace		315.06	
Bocce ball court terrace		159.03	
Stone steps (all)		35.22	
Total quantities	**1708.72**	**1427.02**	**281.70 <Cut>**
Combined for subdivision	**3656.69**	**2178.62**	**1478.07 <Cut>**

GIST RD. SFR 1

APN544-23-041; PROPOSED ADDRESS: 20555 GIST RD, LOS GATOS, CA 95033

REVISION HISTORY

S3DA Structural & Architectural Design
4196 Adams Ave. San Diego CA 92116
(619) 404-0220

Mr. Nader Moavenian
nader.m@s3da-design.com

Civil Engineer: Joanne C. Singer, P.E.

REGISTERED PROFESSIONAL ENGINEER
JOANNE C. SINGER
C 26900
3/31/2021
CIVIL
STATE OF CALIFORNIA

STAMP

1. The contractor must check all dimensions on-site before commencing work

2. These drawings are to be read in conjunction with all relevant designer, engineer or specialist drawings and specifications

3. The contractor is responsible for providing all necessary temporary support to the building and any adjacent structures

COUNTY APPROVAL STAMP

REVISION DATE
01/02/21

DRAWING NAME
018 Grading plan

Drawing Scale
1" = 20'

C-5-GR

PROFILE: COMMON ACCESS ROAD PLAN
SCALE H: 1"=20' SCALE V: 1"=10'

© MH ENGINEERING INC

1 Common access road 1" = 20'

PROFILE: T OF THE HAMMER HEAD TURNAROUND PER SD-16 FROM EDGE OF COMMON ACCESS ROAD TO PROPOSED GARAGE
SCALE H: 1"=10' SCALE V: 1"=10'

FIRE NOTES

1. These plans comply with 2022 California Building Code, 2022 California Fire code and district amendments.
2. Occupancy R-3 & U, type I-B, fully sprinkled. Approved automatic system complying with the edition of NFPA 13D currently adopted in Chapter 35 of the California Building Code is required.
3. The designer/installer must submit two sets of plans, calculations and cut sheets for the underground and overhead residential automatic sprinkler system to the central fire protection district.
4. Address numbers must be posted and maintained as shown on the site plan. Numbers must be a minimum of 4 inches in height and of a color contrasting to their background.
5. Roof coverings must be Class A.
6. Job copies of the building plans and permits must remain on-site during inspections.
7. All significant combustible vegetation must be removed within 30 feet of the structure to minimize risk of wildfire casualty. Appropriate separation of vegetative fuels must be maintained in areas between 30 and 100 feet from the structure.
8. Any electric gates must be equipped with the county fire protection district key entry system.
9. All vent openings to be covered by Wildland Flame and Ember Resistant vents approved and listed by the California State Fire Marshal, or WUI vents listed to ASTM E2886 per Section R337.6.2.
10. Roof gutters to be provided with leaf guards per Section R337.5.4.
11. Underside of the roof eaves is to be finished with an ignition resistant or non-combustible material to comply with WUI requirements of Section R337.7

NOTES

1. Driveway and access road, Fire Department Access, will be of "all weather material" (roughened concrete) capable of holding 75,000 lbs.
2. The driveway width will be maintained at 12'-0" minimum and a clear height of 13'-6".

GIST RD. SFR 1

APN544-23-041; PROPOSED ADDRESS: 20555
GIST RD, LOS GATOS, CA 95033

REVISION HISTORY

S3DA Structural & Architectural Design
4196 Adams Ave. San Diego CA 92116
(619) 404-0220

Mr. Nader Moavenian
nader.m@s3da-design.com

Civil Engineer: Joanne C. Singer, P.E.

REGISTERED PROFESSIONAL ENGINEER JOANNE C. SINGER C 26900 3/31/2021 CIVIL STATE OF CALIFORNIA

STAMP

1. The contractor must check all dimensions on-site before commencing work
2. These drawings are to be read in conjunction with all relevant designer, engineer or specialist drawings and specifications
3. The contractor is responsible for providing all necessary temporary support to the building and any adjacent structures

COUNTY APPROVAL STAMP

REVISION DATE
01/02/21

DRAWING NAME
019 Grading. Common access road profile

Drawing Scale
1" = 20'

C-6-GR

NOTES:

1. Driveway and access road, Fire Department Access, will be of "all weather material" (roughened concrete) capable of holding 75,000 lbs.
2. The driveway width will be maintained at 12'-0" minimum and a clear height of 13'-6".

FIRE NOTES

1. These plans comply with 2022 California Building Code, 2022 California Fire code and district amendments.
2. Occupancy R-3 & U, type I-B, fully sprinkled. Approved automatic system complying with the edition of NFPA 13D currently adopted in Chapter 35 of the California Building Code is required.
3. The designer/installer must submit two sets of plans, calculations and cut sheets for the underground and overhead residential automatic sprinkler system to the central fire protection district.
4. Address numbers must be posted and maintained as shown on the site plan. Numbers must be a minimum of 4 inches in height and of a color contrasting to their background.
5. Roof coverings must be Class A.
6. Job copies of the building plans and permits must remain on-site during inspections.
7. All significant combustible vegetation must be removed within 30 feet of the structure to minimize risk of wildfire casualty. Appropriate separation of vegetative fuels must be maintained in areas between 30 and 100 feet from the structure.
8. Any electric gates must be equipped with the county fire protection district key entry system.
9. All vent openings to be covered by Wildland Flame and Ember Resistant vents approved and listed by the California State Fire Marshal, or WUI vents listed to ASTM E2886 per Section R337.6.2.
10. Roof gutters to be provided with leaf guards per Section R337.5.4.
11. Underside of the roof eaves is to be finished with an ignition resistant or non-combustible material to comply with WUI requirements of Section R337.7

Type 1 Fire Engine
183" Wheel Base

Proposed residence
Ground Floor FF: 1880.00
Second Floor FF 1893.00
Vegetable garden terrace
Camellia terrace

Gist Road

APN 544-23-041
Zaviyalovs, Doc#24015739
Parcel B, 0.95 acres

Wharf hydrant 4
2 1/2" orifice
1878.40

PROFILE: SFR1 DRIVEWAY GIST RD TO GARAGE
SCALE H: 1"=10' SCALE V: 1"= 10'

GIST RD. SFR 1

APN544-23-041; PROPOSED ADDRESS: 20555 GIST RD, LOS GATOS, CA 95033

REVISION HISTORY

S3DA Structural & Architectural Design
4196 Adams Ave. San Diego CA 92116
(619) 404-0220

Mr. Nader Moavenian
nader.m@s3da-design.com

Civil Engineer: Joanne C. Singer, P.E.

REGISTERED PROFESSIONAL ENGINEER
JOANNE C. SINGER
C 26900
3/31/2021
CIVIL
STATE OF CALIFORNIA
STAMP

1. The contractor must check all dimensions on-site before commencing work
2. These drawings are to be read in conjunction with all relevant designer, engineer or specialist drawings and specifications
3. The contractor is responsible for providing all necessary temporary support to the building and any adjacent structures

COUNTY APPROVAL STAMP

REVISION DATE
01/02/21

DRAWING NAME
020 Grading. SFR1 Driveway profile.

Drawing Scale
1" = 10'

C-7-GR

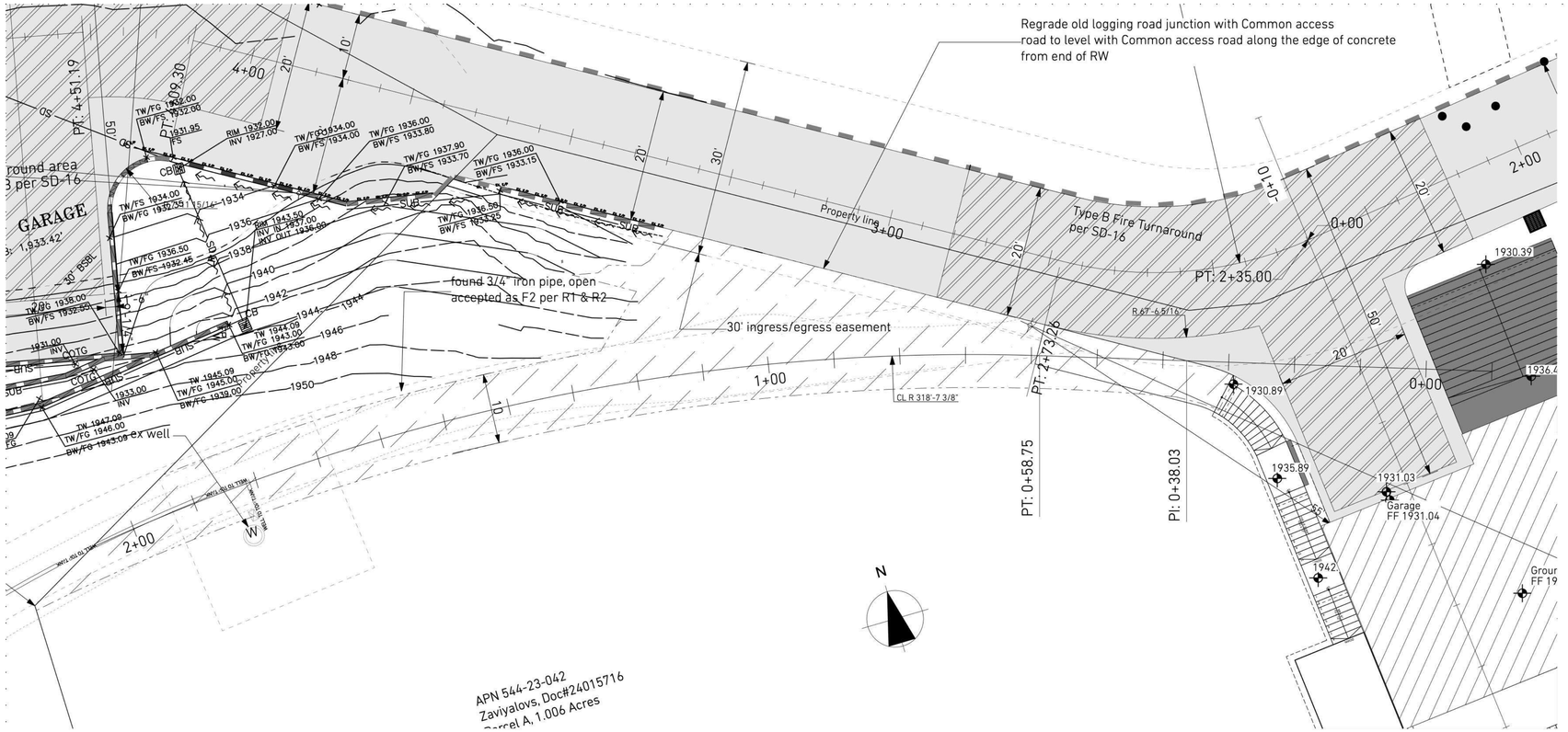

2 Water well path 1" = 10'

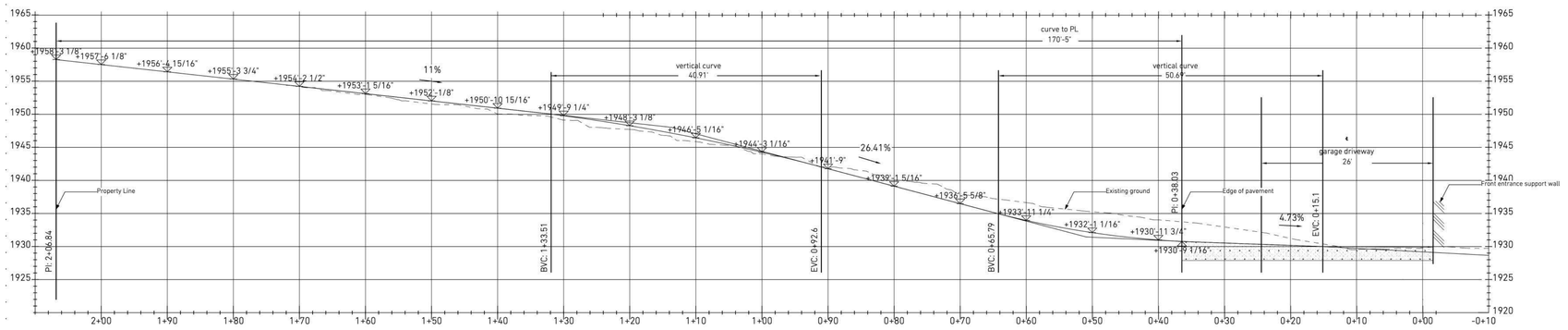

PROFILE: OLD LOGGING ROAD & WATER WELL PATH FROM COMMON ACCESS ROAD TO WATER WELL AND PROPERTY LINE
SCALE H: 1"=10' SCALE V: 1"=10'

NOTES:
1. Driveway and access road, Fire Department Access, will be of "all weather material" (roughened concrete) capable of holding 75,000 lbs.
2. The driveway width will be maintained at 12'-0" minimum and a clear height of 13'-6".

FIRE NOTES

1. These plans comply with 2022 California Building Code, 2022 California Fire code and district amendments.
2. Occupancy R-3 & U, type I-B, fully sprinkled. Approved automatic system complying with the edition of NFPA 13D currently adopted in Chapter 35 of the California Building Code is required.
3. The designer/installer must submit two sets of plans, calculations and cut sheets for the underground and overhead residential automatic sprinkler system to the central fire protection district.
4. Address numbers must be posted and maintained as shown on the site plan. Numbers must be a minimum of 4 inches in height and of a color contrasting to their background.
5. Roof coverings must be Class A.
6. Job copies of the building plans and permits must remain on-site during inspections.
7. All significant combustible vegetation must be removed within 30 feet of the structure to minimize risk of wildfire casualty. Appropriate separation of vegetative fuels must be maintained in areas between 30 and 100 feet from the structure.
8. Any electric gates must be equipped with the county fire protection district key entry system.
9. All vent openings to be covered by Wildland Flame and Ember Resistant vents approved and listed by the California State Fire Marshal, or WUI vents listed to ASTM E2886 per Section R337.6.2.
10. Roofs gutters to be provided with leaf guards per Section R337.5.4.
11. Underside of the roof eaves is to be finished with an ignition resistant or non-combustible material to comply with WUI requirements of Section R337.7

GIST RD. SFR 1

APN544-23-041; PROPOSED ADDRESS: 20555 GIST RD, LOS GATOS, CA 95033

REVISION HISTORY

S3DA Structural & Architectural Design
4196 Adams Ave. San Diego CA 92116
(619) 404-0220

Mr. Nader Moavenian
nader.m@s3da-design.com

Civil Engineer: Joanne C. Singer, P.E.

REGISTERED PROFESSIONAL ENGINEER
JOANNE C. SINGER
C 26900
3/31/2021
CIVIL
STATE OF CALIFORNIA
STAMP

1. The contractor must check all dimensions on-site before commencing work

2. These drawings are to be read in conjunction with all relevant designer, engineer or specialist drawings and specifications

3. The contractor is responsible for providing all necessary temporary support to the building and any adjacent structures

COUNTY APPROVAL STAMP

REVISION DATE
01/02/21

DRAWING NAME
021 Grading. Water well path

Drawing Scale
1" = 10'

C-8-GR

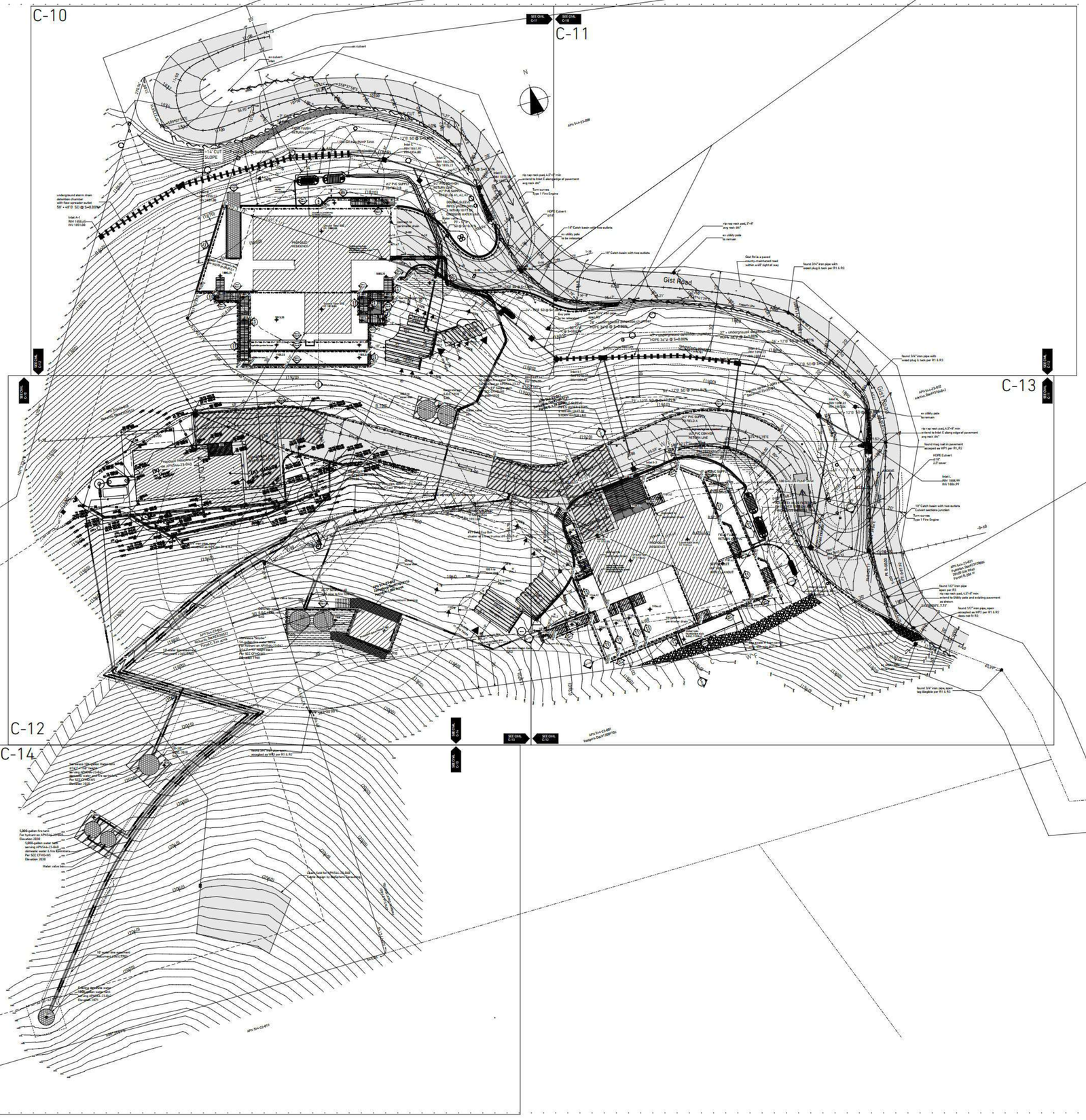

LOT COVERAGE

APN544-23-041 LOT AREA	55,568.74 ft2
NET LOT AREA	35,017.96 ft2
BUILDING FOOTPRINT	3968 ft2
PERCENTAGE OF THE LOT COVERED BY BUILDINGS	7.14%
PERCENTAGE OF NET LOT AREA COVERED BY BUILDINGS	11.33%
APN544-23-042 LOT AREA	47,417.74 ft2
NET LOT AREA	39,327.08 ft2
PRIMARY RESIDENCE BUILDING FOOTPRINT	3,545 ft2
GUEST HOUSE BUILDING FOOTPRINT	435 ft2
PERCENTAGE OF THE LOT COVERED BY BUILDINGS	8.39%
PERCENTAGE OF NET LOT AREA COVERED BY BUILDINGS	10.12%

GIST RD. SFR 1

APN544-23-041; PROPOSED ADDRESS: 20555 GIST RD, LOS GATOS, CA 95033

REVISION HISTORY

S3DA Structural & Architectural Design
4196 Adams Ave. San Diego CA 92116
(619) 404-0220

Mr. Nader Moavenian
nader.m@s3da-design.com

Civil Engineer: Joanne C. Singer, P.E.

REGISTERED PROFESSIONAL ENGINEER
JOANNE C. SINGER
C 26900
3/31/2021
CIVIL
STATE OF CALIFORNIA

STAMP

1. The contractor must check all dimensions on-site before commencing work

2. These drawings are to be read in conjunction with all relevant designer, engineer or specialist drawings and specifications

3. The contractor is responsible for providing all necessary temporary support to the building and any adjacent structures

COUNTY APPROVAL STAMP

REVISION DATE
01/02/21

DRAWING NAME
022 Subdivision site plan - drawings layout

Drawing Scale
1" = 30'

C-9

C-10

SEE CIVIL C-11

SEE CIVIL C-12

N

underground storm drain
detention chamber
with flow spreader outlet
58' - 48"Ø SD @ S=0.00%

Inlet A-1
RIM 1858.65
INV 1851.00

Inlet B
RIM 1858.12
INV 1851.00

ex culvert

ex culvert inlet

ditch

270.94'

33'-00"

N5°22'58"W

S89°07'58"E

56.95'

137'-8"

107.24'

50.29'

S58°37'58"E

79.27'

S58°22'58"E

~14' CUT SLOPE

~7' CUT SLOPE

8' CUT SLOPE

FIELD FLUSH
RETURN Ø2" PVC

1,500 GALLON PUMP TANK

HEADWORKS

127' - 48"Ø SD @ S=0.00%

17' - 12"Ø SD @ S=3.85%

42' - 12"Ø SD @ S=0.71%

33' - 12"Ø SD @ S=1.60%

24' - 12"Ø S

Inlet C
RIM 1861.93
INV 1854.00

Inlet D
RIM 1862.78
INV 1855.23

Inlet E
RIM 1858.30
INV 1855.62

rip rap rock pad, 4.5'×8'
extend to Inlet E along
avg rock Ø6"

Turn curves
Type 1 Fire Eng

Ø2" PVC SUPPLY
TO FIELD B

Ø2" PVC COMMON
RETURN LINE
Ø2" PVC SUPPLY
TO FIELDS A1, A2, A3

DOUBLE-SLEEVE
PIPES UNDER DRIVE
& WITHIN 10 FT OF
CROSSING WATER LINE

Water valve box

75' - 12"Ø SD @ S=10.71%

200.96'

connect to perimeter drain

ADVANTEX AX-20 FILTER POD
ON ORENCO 1,500 GALLON
TRAFFIC RATED PRECAST TANK

SEPTIC INLET
6"x" ABS
WITH CLEANOUT

Ground Floor SOC
FF: 1880.00

PROPOSED
RESIDENCE

CONTROL/ALARM PANEL
ORENCO ECOM-T CUSTOM
WITH AUDIBLE & VISUAL ALARMS
IN MECHANICAL ROOM

PROPANE SUPPLY LINE

Second Floor SOC
FF 1893.00

Garden Moon Gate
SAD

Vegetable garden terrace

Gardenia terrace

Setback from property line
per SCCZO §4.20.20 C.1

149'-7 1/2"

41'-8 1/2"

40.00'

S31°52'32"E

S26°02'41"E

FIELD A1
138 sq ft

FIELD A2
64 sq ft

FIELD A3
64 sq ft

FIELD B
138 sq ft

in drip fields

40.42%

HDP
Ø18'

S39°31'18"E

R11.3'

R51.5'

1880.25
1879.67
1886.6
1884.88
1889.23
1893.33
1899.33
1905.33
1872.25

(1850)
(1860)
(1870)
(1880)
(1890)

S3DA Structural & Architectural Design
4196 Adams Ave. San Diego CA 92116
(619) 404-0220

Mr. Nader Moavenian
nader.m@s3da-design.com

Civil Engineer: Joanne C. Singer, P.E.

REGISTERED PROFESSIONAL ENGINEER
JOANNE C. SINGER
C 26900
3/31/2021
CIVIL
STATE OF CALIFORNIA
STAMP

1. The contractor must check all dimensions on-site before commencing work

2. These drawings are to be read in conjunction with all relevant designer, engineer or specialist drawings and specifications

3. The contractor is responsible for providing all necessary temporary support to the building and any adjacent structures

COUNTY APPROVAL STAMP

REVISION DATE
01/02/21

DRAWING NAME
023 Subdivision site plan

Drawing Scale
1" = 10'

C-10

GIST RD. SFR 1

APN544-23-041; PROPOSED ADDRESS: 20555 GIST RD, LOS GATOS, CA 95033

REVISION HISTORY

SEE CIVIL C-10

C-11

N

APN 544-23-008

, 4.5'×8' min
E along edge of pavement

ves
ire Engine

HDPE Culvert
Ø18"

18" Catch basin with two outlets

ex utility pole
to be relocated

18" Catch basin with two outlets

rip rap rock pad, 3'×8'
avg rock Ø6"

ex utility pole
to remain

Gist Rd is a paved
county-maintaned road
within a 40' right of way

found 3/4" iron pipe with
wood plug & tack per R1 & R3

Gist Road

Property Line

Guy pole
to be relocated

found 3/4" iron pipe
open R3

28' - underground detention chamber
HDPE 36"ø @ S=0.00%

20'
SD 12"ø
@ S=50.83%

47' - underground detention chamber
HDPE 36"ø @ S=0.00%

37' - underground detention chamber
HDPE 36"ø @ S=0.00%

16' - 12"Ø SD @ S=1.77%

45' - 12"Ø SD @ S=1.77%

Updated County ROW Line

Updated County ROW Line
Document 23455703

Storm Drain Easement

Inlet J-1
RIM 1894.23
INV 1881.44

Inlet I-1
RIM 1890.57
INV 1881.44

found 3/4" iron pipe with
wood plug & tack per R1 & R3

SEE CIVIL C-12

C-12

GIST RD. SFR 1

APN544-23-041; PROPOSED ADDRESS: 20555
GIST RD, LOS GATOS, CA 95033

REVISION HISTORY

S3DA Structural & Architectural Design
4196 Adams Ave. San Diego CA 92116
(619) 404-0220

Mr. Nader Moavenian
nader.m@s3da-design.com

Civil Engineer: Joanne C. Singer, P.E.

REGISTERED PROFESSIONAL ENGINEER
JOANNE C. SINGER
C 26900
3/31/2021
CIVIL
STATE OF CALIFORNIA

STAMP

1. The contractor must check all dimensions on-site before commencing work

2. These drawings are to be read in conjunction with all relevant designer, engineer or specialist drawings and specifications

3. The contractor is responsible for providing all necessary temporary support to the building and any adjacent structures

COUNTY APPROVAL STAMP

REVISION DATE
01/02/21

DRAWING NAME
024 Subdivision site plan

Drawing Scale
1" = 10'

C-11

GIST RD. SFR 1

APN544-23-041; PROPOSED ADDRESS: 20555 GIST RD, LOS GATOS, CA 95033

REVISION HISTORY

S3DA Structural & Architectural Design
4196 Adams Ave. San Diego CA 92116
(619) 404-0220

Mr. Nader Moavenian
nader.m@s3da-design.com

Civil Engineer: Joanne C. Singer, P.E.

REGISTERED PROFESSIONAL ENGINEER
JOANNE C. SINGER
C 26900
3/31/2021
CIVIL
STATE OF CALIFORNIA
STAMP

1. The contractor must check all dimensions on-site before commencing work

2. These drawings are to be read in conjunction with all relevant designer, engineer or specialist drawings and specifications

3. The contractor is responsible for providing all necessary temporary support to the building and any adjacent structures

COUNTY APPROVAL STAMP

REVISION DATE
01/02/21

DRAWING NAME
025 Subdivision site plan

Drawing Scale
1" = 10'

C-12

SEE CIVIL C-10

SEE CIVIL C-13

SEE CIVIL C-14

C-12

C-14

N

Proposed Residence on APN544-23-040

(N) GARAGE

Turnaround area Type B per SD-16

APN 544-23-040
Richards, Doc#23458532

APN 544-23-042
Zavyalov, Doc#24015716
Parcel A, 1.006 Acres

Parcel C, 3.64 acres

10' water line easement
Document 234527703

Norwesco "Snyder"
5K-gallon fire water tanks
For hydrant on APN544-23-042
⌀142" × 93" height each
Per SCC CFM0-W5
Elevation 1988

Norwesco "Snyder" or SIM-
5K-gallon fire water tanks
For hydrant on APN544-23-41
⌀142" × 93" height each
Per SCC CFM0-W5
Elevation 1920

Concrete pad
S.O.C. 1920
SAD

Concrete pad
S.O.C. 1988
SAD

Concrete pad
20×20'
S.O.C. 2020

Water valve box

100 ft to Water Well

50 ft to Water Well

Property line

Wharf hydrant at lot APN544-23-040
1934.00

found 3/4" iron pipe, open
accepted as F2 per R1 & R2

found 3/4" iron pipe, open
accepted as WP4 per R1 & R2

found 3/4" iron pipe open
accepted as WP3 per R1 & R2

ex well

ex dirt road

30' ingress/egress easement

30 foot setback line

Reduced setback line

#91 Gold Cup Oak
cluster of 5 tree trunks: ⌀9-6-6-7-6"

⌀2.5" Schedule 40
ABS pipe to fire hydrant

Aluminum decking

Proposed guesthouse 1980

3 ft to steep slope

25-35% in drip fields

FIELD B
24 - 12"
384 sq ft

Garden Moon Gat

S83°00'00"E
156.42'

N27°47'11"W

S46°33'09"E

S60°30'29"E

R 100'

R 109.30'

R 51.19'

104.28'

270.94'

247.27'

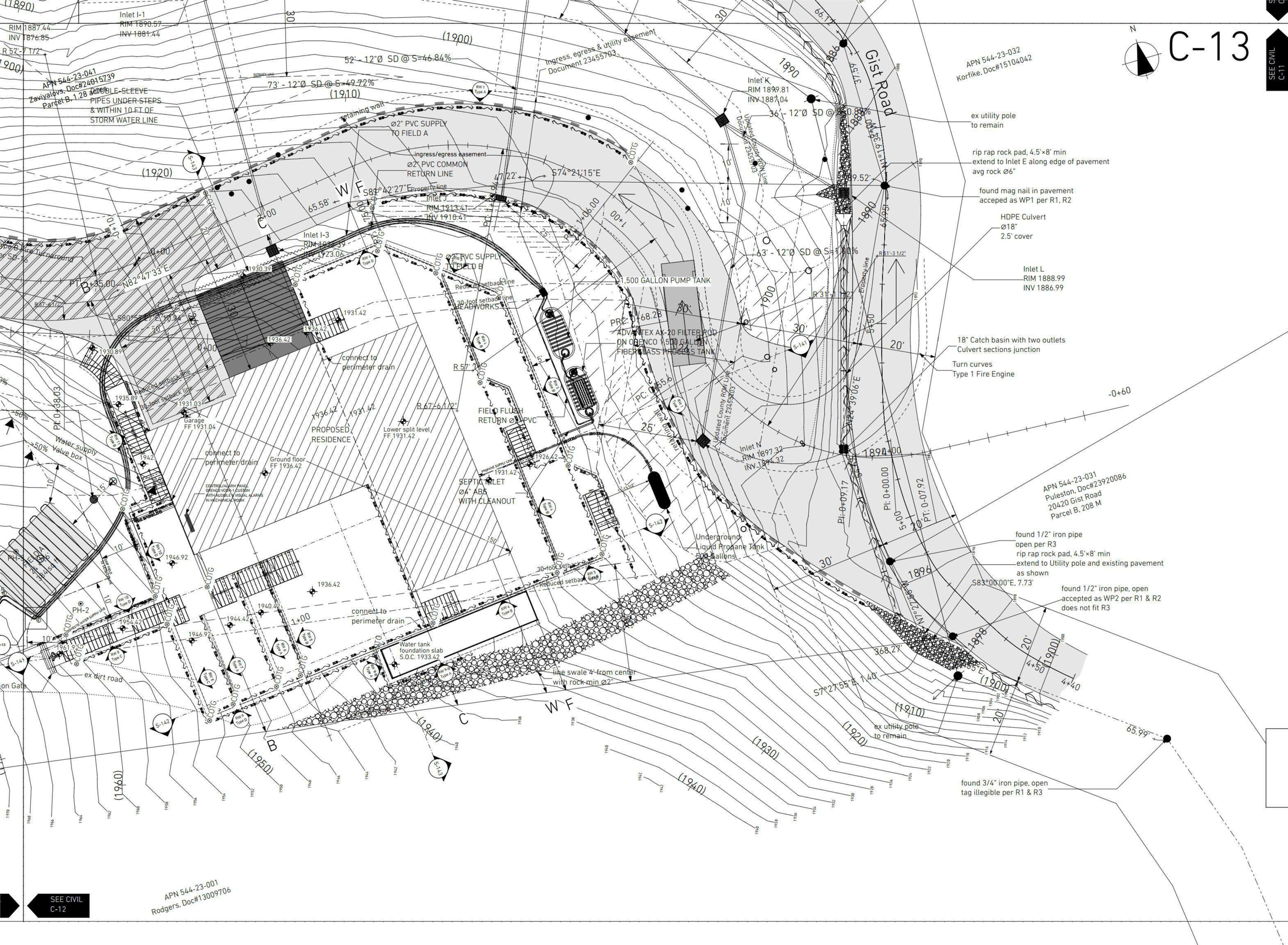

GIST RD. SFR 1

APN544-23-041; PROPOSED ADDRESS: 20555

GIST RD, LOS GATOS, CA 95033

REVISION HISTORY

S3DA Structural & Architectural Design
4196 Adams Ave. San Diego CA 92116
(619) 404-0220

Mr. Nader Moavenian
nader.m@s3da-design.com

Civil Engineer: Joanne C. Singer, P.E.

REGISTERED PROFESSIONAL ENGINEER
JOANNE C. SINGER
C 26900
3/31/2021
CIVIL
STATE OF CALIFORNIA

STAMP

1. The contractor must check all dimensions on-site before commencing work

2. These drawings are to be read in conjunction with all relevant designer, engineer or specialist drawings and specifications

3. The contractor is responsible for providing all necessary temporary support to the building and any adjacent structures

COUNTY APPROVAL STAMP

REVISION DATE
01/02/21

DRAWING NAME
026 Subdivision site plan

Drawing Scale
1" = 10'

C-13

GIST RD. SFR 1

APN544-23-041; PROPOSED ADDRESS: 20555

GIST RD, LOS GATOS, CA 95033

REVISION HISTORY

S3DA Structural & Architectural Design
4196 Adams Ave. San Diego CA 92116
(619) 404-0220

Mr. Nader Moavenian
nader.m@s3da-design.com

Civil Engineer: Joanne C. Singer, P.E.

REGISTERED PROFESSIONAL ENGINEER
JOANNE C. SINGER
C 26900
3/31/2021
CIVIL
STATE OF CALIFORNIA

STAMP

1. The contractor must check all dimensions on-site before commencing work

2. These drawings are to be read in conjunction with all relevant designer, engineer or specialist drawings and specifications

3. The contractor is responsible for providing all necessary temporary support to the building and any adjacent structures

COUNTY APPROVAL STAMP

REVISION DATE
01/02/21

DRAWING NAME
027 Subdivision site plan

Drawing Scale
1" = 10'

C-14

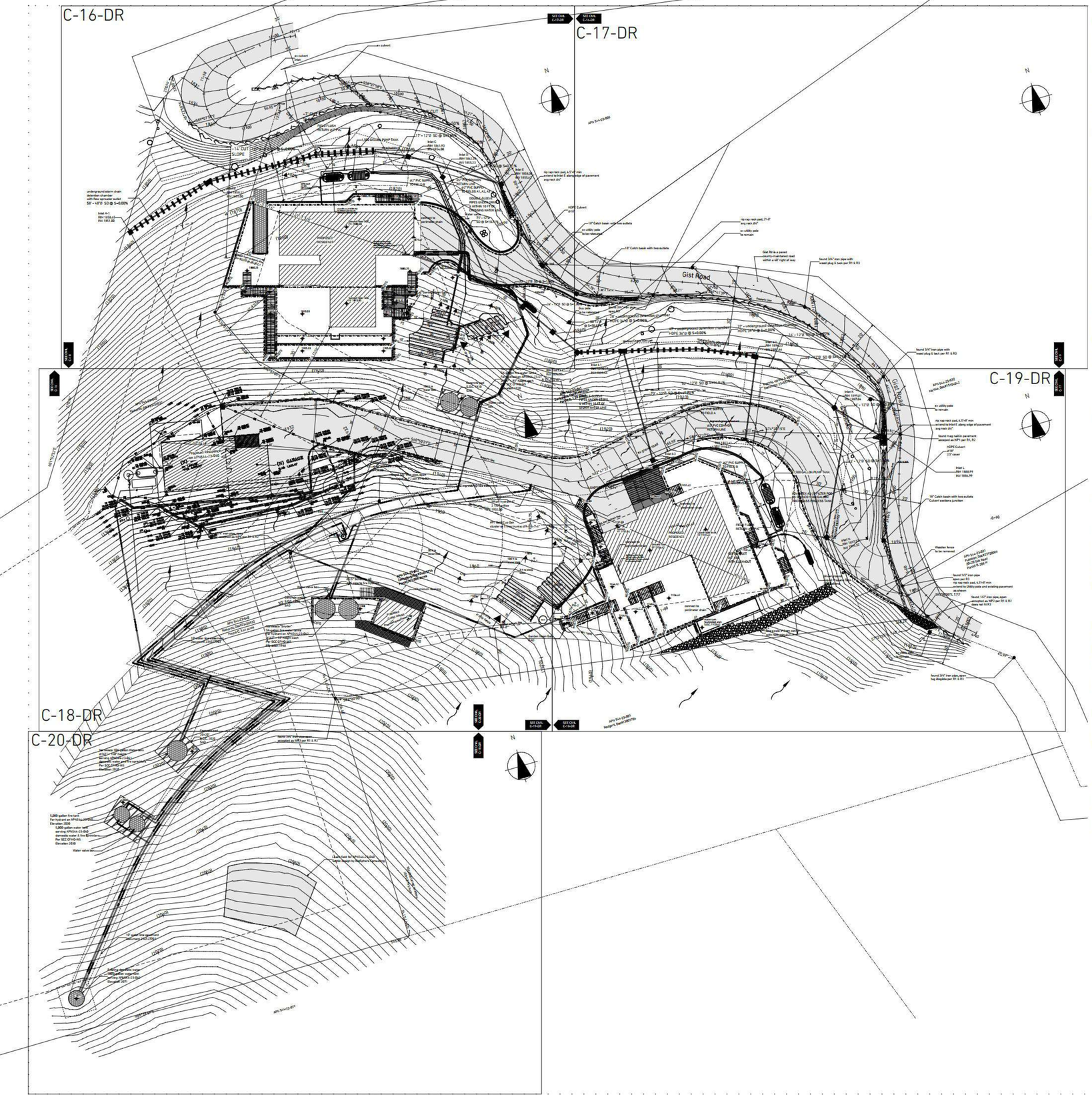

EXISTING DRAINAGE
COMPOSITE CURVE NUMBER COMPUTATIONS REPORT

Subbasin Sub-01

Soil/Surface Description	Area (ft2)	Soil Group	CN
Meadow, non-grazed	87119.65	D	72
Composite Area & Weighted CN	**87119.65**	**D**	**72**

EPA SWMM Time of Concentration Computations Report

Tc = (0.94 * (L^0.6) * (n^0.6)) / ((i^0.4) * (S^0.3))
Where
Tc = Time of Concentration (min)
L = Flow Length (ft)
n = Manning's Roughness
i= Rainfall Intensity (in/hr)
S = Slope (ft/ft)

Subbasin Runoff Summary

Subbasin Time of ID Concentration	Total Rainfall	Total Runon	Total Evap.	Total Infil.	Total Runoff	Peak Runoff	Runoff Coefficient	
hh:mm:ss	in	in	in	in	in	cfs		days
Sub-01 0:45:34	3.50	0.00	0.00	2.14	1.32	1.21		0

Analysis began on: Tue Nov 26 19:09:19 2019
Analysis ended on: Tue Nov 26 19:09:19 2019
Total elapsed time: < 1 sec

PROPOSED DRAINAGE
COMPOSITE CURVE NUMBER COMPUTATIONS REPORT

Subbasin 544-23-042

Soil/Surface Description	Area (ft2)	Soil Group	CN
Meadow, non-grazed	19849.04	D	78.00
1/8 acre lots, 65% impervious	8825.98	D	92.00
Composite Area & Weighted CN	**28675.02**		**82.14**

Subbasin 544-23-041

Soil/Surface Description	Area (ft2)	Soil Group	CN
Meadow, non-grazed	11673.95	D	78.00
1/8 acre lots, 65% impervious	8325.98	D	92.00
Composite Area & Weighted CN	**19999.93**		**83.83**

Subbasin Sub-02

Soil/Surface Description	Area (ft2)	Soil Group	CN
Meadow, non-grazed	10124.96	D	78.00
Composite Area & Weighted CN	**10124.96**		**78.00**

Subbasin Sub-04

Soil/Surface Description	Area (ft2)	Soil Group	CN
Meadow, non-grazed	8741.98	D	78.00
Composite Area & Weighted CN	**8741.98**		**78.00**

Subbasin Sub-05

Soil/Surface Description	Area (ft2)	Soil Group	CN
Meadow, non-grazed	20954.93	D	78.00
Composite Area & Weighted CN	**20954.93**		**78.00**

Subbasin Runoff Summary
EPA SWMM Time of Concentration Computations Report

Tc = (0.94 * (L^0.6) * (n^0.6)) / ((i^0.4) * (S^0.3))
Where
Tc = Time of Concentration (min)
L = Flow Length (ft)
n = Manning's Roughness
i= Rainfall Intensity (in/hr)
S = Slope (ft/ft)

Subbasin Time of ID Concentration	Total Rainfall	Total Runon	Total Evap.	Total Infil.	Total Runoff	Peak Runoff	Runoff Coefficient	
hh:mm:ss	in	in	in	in	in	cfs		days
544-23-042 00:26:58	4.70	0.00	0.00	1.20	3.45	1.82	0.734	0
544-23-041 00:41:56	4.70	0.00	0.00	1.19	3.46	1.13	0.736	0
Sub-02 00:41:56	4.70	0.00	0.00	1.96	2.70	0.60	0.574	0
Sub-04 00:17:26	4.70	0.00	0.00	1.97	2.68	0.50	0.570	0
Sub-05 00:44:41	4.70	0.00	0.00	2.06	2.59	0.75	0.551	0

NODE FLOW SUMMARY

Node ID	Element Type	Maximum Lateral Inflow	Peak Inflow	Time of Peak Inflow Occurrence	Maximum Flooding Overflow	Time of Peak Flooding Occurrence	
				days hh:mm		days hh:mm	
		cfs	cfs		cfs		
Out-01	OUTFALL	0.50	0.50	0 02:36	0.00	0 00:00	
Out-05	OUTFALL	0.00	1.72	0 02:36	0.00	0 00:00	
Out-06	OUTFALL	0.00	2.55	0 02:36	0.00	0 00:00	
Diversion-01	DIVIDER	0.00	1.72	0 02:36	0.00	0 00:00	

INLET FLOW SUMMARY
Inlet ID

	Total Time Flooded	Peak Flow	Peak Lateral Flow	Peak Flow Intercepted by Inlet	Peak Flow Bypassing Inlet	Inlet Efficiency during Peak Flow	Total Flooding
	Minutes	cfs	cfs	cfs	cfs	%	acre-in
Inlet-06	0	1.82	1.82	-	-	-	0.000
Inlet-08	0	0.75	0.75	-	-	-	0.000
Inlet-09	0	1.13	1.13	-	-	-	0.000
Inlet-10	0	0.60	0.60	-	-	-	0.000

OUTFALL LOADING SUMMARY

Outfall Node ID	Flow Frequency	Average Flow	Peak Inflow
	%	cfs	cfs
Out-01	0.71	0.11	0.50
Out-05	1.27	0.24	1.72
Out-06	1.20	0.41	2.55
System	1.06	0.76	4.77

Link Flow Summary
Link ID

	Ratio of Maximum Flow Depth	Surcharged minutes	Element Reported Type Condition	Time of Peak Flow Occurrence days hh:mm	Maximum Velocity Attained ft/sec	Length Factor	Peak Flow during Analysis cfs	Design Flow Capacity cfs	Ratio of Maximum/Design Flow
Link-05	0.69	0	CONDUIT Calculated	0 02:36	12.53	1.00	1.81	2.20	0.82
Link-06	0.68	0	CONDUIT Calculated	0 02:36	4.50	1.00	2.55	3.16	0.81
Link-07	0.56	0	CONDUIT Calculated	0 02:36	5.59	1.00	1.12	1.87	0.60
Link-08	0.62	0	CONDUIT Calculated	0 02:36	10.51	1.00	0.60	0.85	0.71
Link-09	0.56	0	CONDUIT Calculated	0 02:36	5.51	1.00	1.72	2.88	0.60

GIST RD. SFR 1

APN544-23-041; PROPOSED ADDRESS: 20555 GIST RD, LOS GATOS, CA 95033

REVISION HISTORY

S3DA Structural & Architectural Design
4196 Adams Ave. San Diego CA 92116
(619) 404-0220

Mr. Nader Moavenian
nader.m@s3da-design.com

Civil Engineer: Joanne C. Singer, P.E.

REGISTERED PROFESSIONAL ENGINEER
JOANNE C. SINGER
C 26900
3/31/2021
CIVIL
STATE OF CALIFORNIA

STAMP

1. The contractor must check all dimensions on-site before commencing work

2. These drawings are to be read in conjunction with all relevant designer, engineer or specialist drawings and specifications

3. The contractor is responsible for providing all necessary temporary support to the building and any adjacent structures

COUNTY APPROVAL STAMP

REVISION DATE
01/02/21

DRAWING NAME
028 Drainage plan

Drawing Scale
1" = 30'

C-15-DR

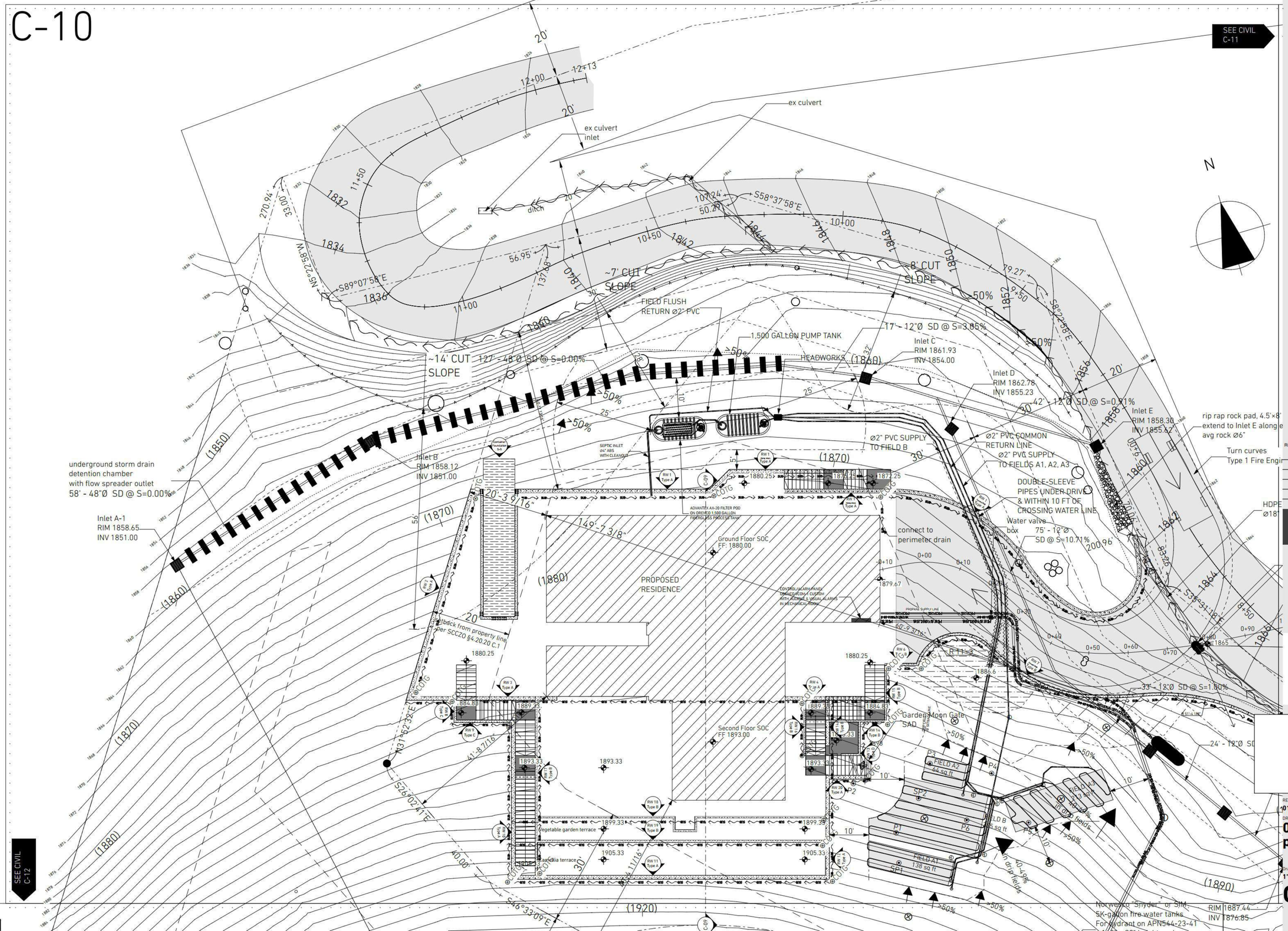

GIST RD. SFR 1

APN544-23-041; PROPOSED ADDRESS: 20555
GIST RD, LOS GATOS, CA 95033

REVISION HISTORY

S3DA Structural & Architectural Design
4196 Adams Ave. San Diego CA 92116
(619) 404-0220

Mr. Nader Moavenian
nader.m@s3da-design.com

Civil Engineer: Joanne C. Singer, P.E.

REGISTERED PROFESSIONAL ENGINEER
JOANNE C. SINGER
C 26900
3/31/2021
CIVIL
STATE OF CALIFORNIA

STAMP

1. The contractor must check all dimensions on-site before commencing work

2. These drawings are to be read in conjunction with all relevant designer, engineer or specialist drawings and specifications

3. The contractor is responsible for providing all necessary temporary support to the building and any adjacent structures

COUNTY APPROVAL STAMP

REVISION DATE
01/02/21

DRAWING NAME
029 Drainage plan

Drawing Scale
1" = 10'

C-16-DR

GIST RD. SFR 1

APN544-23-041; PROPOSED ADDRESS: 20555
GIST RD, LOS GATOS, CA 95033

REVISION HISTORY

S3DA Structural & Architectural Design
4196 Adams Ave. San Diego CA 92116
(619) 404-0220

Mr. Nader Moavenian
nader.m@s3da-design.com

Civil Engineer: Joanne C. Singer, P.E.

REGISTERED PROFESSIONAL ENGINEER
JOANNE C. SINGER
C 26900
3/31/2021
CIVIL
STATE OF CALIFORNIA

STAMP

1. The contractor must check all dimensions on-site before commencing work

2. These drawings are to be read in conjunction with all relevant designer, engineer or specialist drawings and specifications

3. The contractor is responsible for providing all necessary temporary support to the building and any adjacent structures

COUNTY APPROVAL STAMP

REVISION DATE
01/02/21

DRAWING NAME
030 Drainage plan

Drawing Scale
1" = 10'

C-17-DR

GIST RD. SFR 1

APN544-23-041; PROPOSED ADDRESS: 20555 GIST RD, LOS GATOS, CA 95033

REVISION HISTORY

S3DA Structural & Architectural Design
4196 Adams Ave, San Diego CA 92116
(619) 404-0220

Mr. Nader Moavenian
nader.m@s3da-design.com

Civil Engineer: Joanne C. Singer, P.E.

REGISTERED PROFESSIONAL ENGINEER
JOANNE C. SINGER
C 26900
3/31/2021
CIVIL
STATE OF CALIFORNIA
STAMP

1. The contractor must check all dimensions on-site before commencing work

2. These drawings are to be read in conjunction with all relevant designer, engineer or specialist drawings and specifications

3. The contractor is responsible for providing all necessary temporary support to the building and any adjacent structures

COUNTY APPROVAL STAMP

REVISION DATE
01/02/21

DRAWING NAME
031 Drainage plan

Drawing Scale
1" = 10'

C-18-DR

SEE CIVIL C-19-DR

SEE CIVIL C-20-DR

C-18-DR

C-20-DR

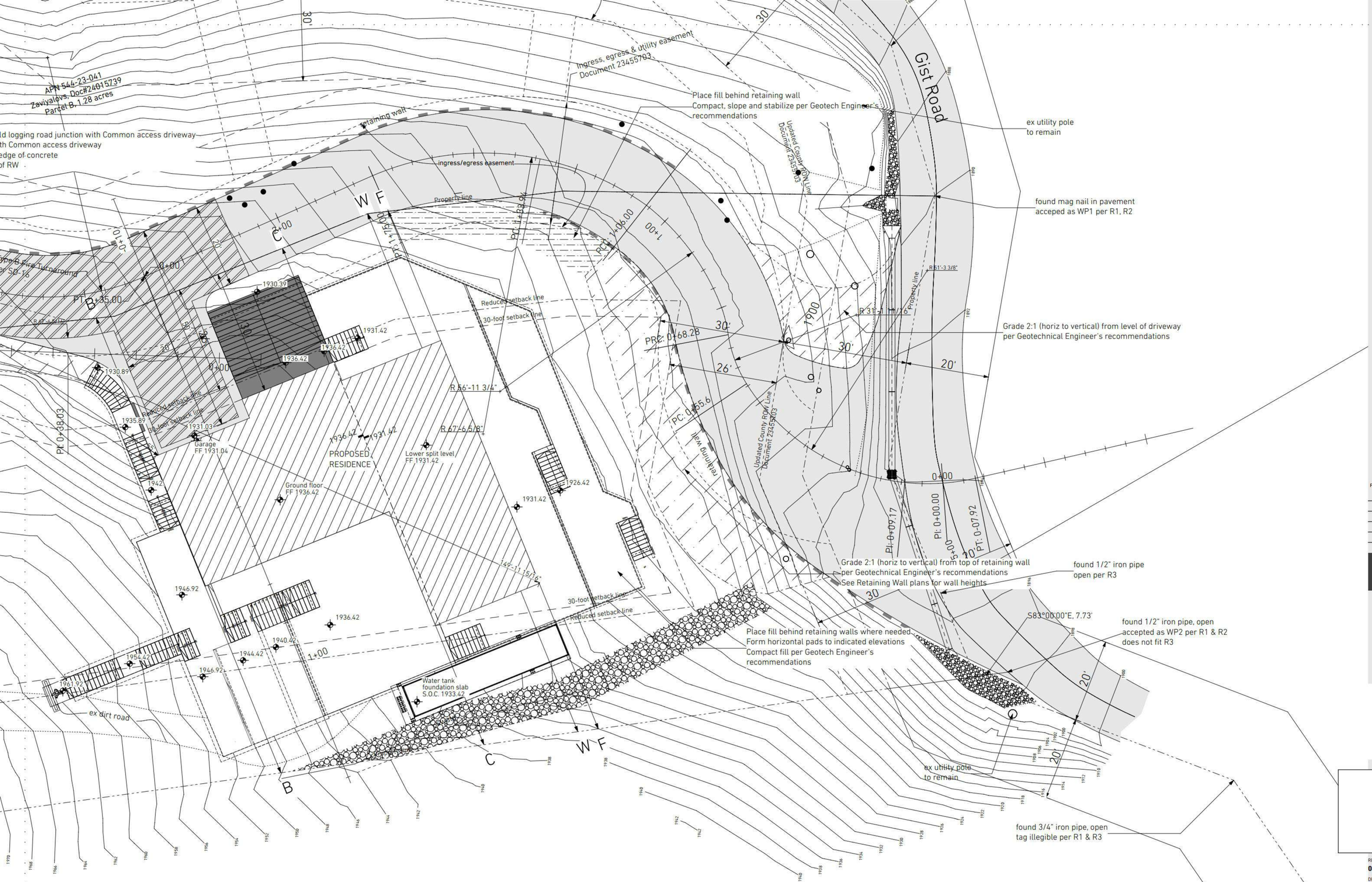

GIST RD. SFR 1

APN544-23-041; PROPOSED ADDRESS: 20555 GIST RD, LOS GATOS, CA 95033

REVISION HISTORY

S3DA Structural & Architectural Design
4196 Adams Ave. San Diego CA 92116
(619) 404-0220

Mr. Nader Moavenian
nader.m@s3da-design.com

Civil Engineer: Joanne C. Singer, P.E.

REGISTERED PROFESSIONAL ENGINEER
JOANNE C. SINGER
C 26900
3/31/2021
CIVIL
STATE OF CALIFORNIA
STAMP

1. The contractor must check all dimensions on-site before commencing work

2. These drawings are to be read in conjunction with all relevant designer, engineer or specialist drawings and specifications

3. The contractor is responsible for providing all necessary temporary support to the building and any adjacent structures

COUNTY APPROVAL STAMP

REVISION DATE
01/02/21

DRAWING NAME
032 Drainage plan

Drawing Scale
1" = 10'

C-19-DR

C-20-DR

GIST RD. SFR 1

APN544-23-041; PROPOSED ADDRESS: 20555 GIST RD, LOS GATOS, CA 95033

REVISION HISTORY

S3DA Structural & Architectural Design
4196 Adams Ave. San Diego CA 92116
(619) 404-0220

Mr. Nader Moavenian
nader.m@s3da-design.com

Civil Engineer: Joanne C. Singer, P.E.

REGISTERED PROFESSIONAL ENGINEER
JOANNE C. SINGER
C 26900
3/31/2021
CIVIL
STATE OF CALIFORNIA

STAMP

1. The contractor must check all dimensions on-site before commencing work

2. These drawings are to be read in conjunction with all relevant designer, engineer or specialist drawings and specifications

3. The contractor is responsible for providing all necessary temporary support to the building and any adjacent structures

COUNTY APPROVAL STAMP

REVISION DATE
01/02/21

DRAWING NAME
033 Drainage plan

Drawing Scale
1" = 10'

C-20-DR

GIST RD. SFR 1

APN544-23-041; PROPOSED ADDRESS: 20555 GIST RD, LOS GATOS, CA 95033

REVISION HISTORY

S3DA Structural & Architectural Design
4196 Adams Ave. San Diego CA 92116
(619) 404-0220

Mr. Nader Moavenian
nader.m@s3da-design.com

Civil Engineer: Joanne C. Singer, P.E.

REGISTERED PROFESSIONAL ENGINEER
JOANNE C. SINGER
C 26900
3/31/2021
CIVIL
STATE OF CALIFORNIA

STAMP

1. The contractor must check all dimensions on-site before commencing work

2. These drawings are to be read in conjunction with all relevant designer, engineer or specialist drawings and specifications

3. The contractor is responsible for providing all necessary temporary support to the building and any adjacent structures

COUNTY APPROVAL STAMP

REVISION DATE
01/02/21

DRAWING NAME
034 Retaining walls. Locations

Drawing Scale
1" = 10'

C-21-RW

RW locations APN544-23-041

1" = 10'

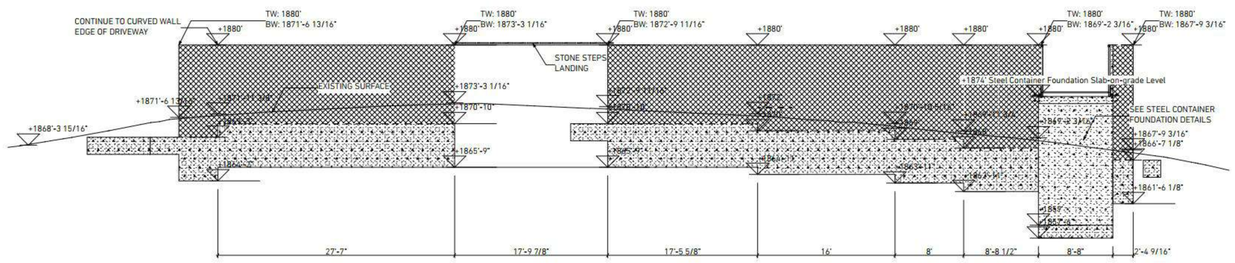

CMU WALL 1, TYPE A

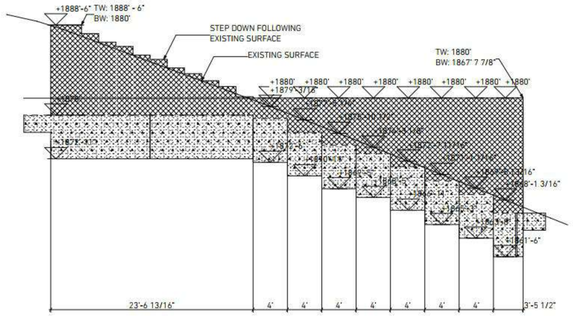

CMU WALL 2, TYPE A

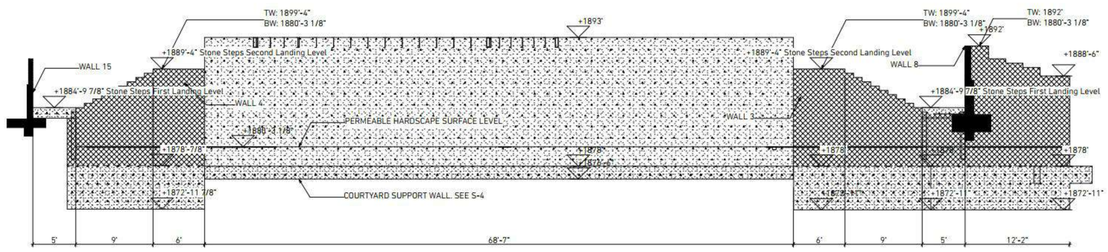

CMU WALL 3, TYPE A. WALL 4, TYPE A. Courtyard Concrete Support Wall

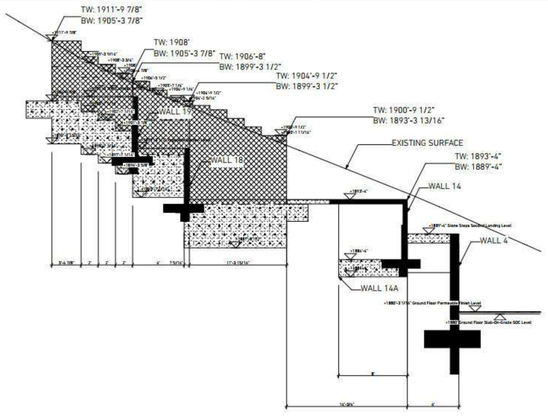

CMU WALL 12, TYPE A; CMU WALL 14A, TYPE B

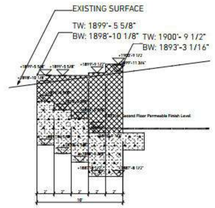

CMU WALL 20, TYPE A

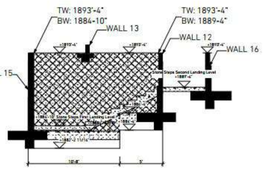

WALL 14, TYPE B

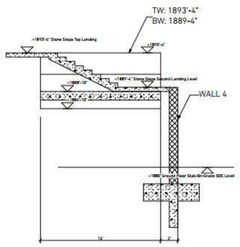

WALL 16, TYPE B

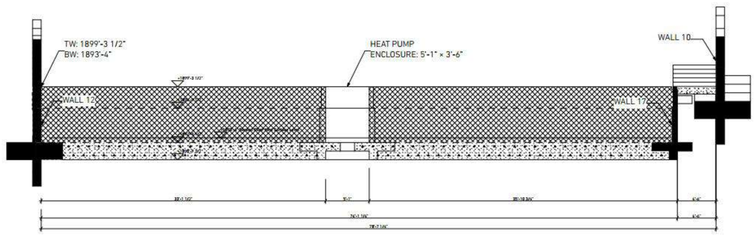

WALL 18, TYPE B

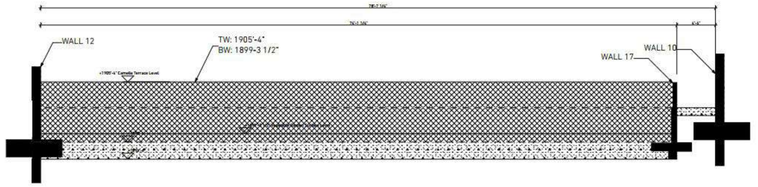

CMU WALL 19, TYPE B

S3DA Structural & Architectural Design
4196 Adams Ave. San Diego CA 92116
(619) 404-0220

Mr. Nader Moavenian
nader.m@s3da-design.com

Civil Engineer: Joanne C. Singer, P.E.

REGISTERED PROFESSIONAL ENGINEER
JOANNE C. SINGER
C 26900
3/31/2021
CIVIL
STATE OF CALIFORNIA

STAMP

1. The contractor must check all dimensions on-site before commencing work

2. These drawings are to be read in conjunction with all relevant designer, engineer or specialist drawings and specifications

3. The contractor is responsible for providing all necessary temporary support to the building and any adjacent structures

COUNTY APPROVAL STAMP

REVISION DATE
01/02/21

DRAWING NAME
035 Retaining walls estimated height elevations

Drawing Scale

C-22-RW

GIST RD. SFR 1

APN544-23-041; PROPOSED ADDRESS: 20555 GIST RD, LOS GATOS, CA 95033

REVISION HISTORY

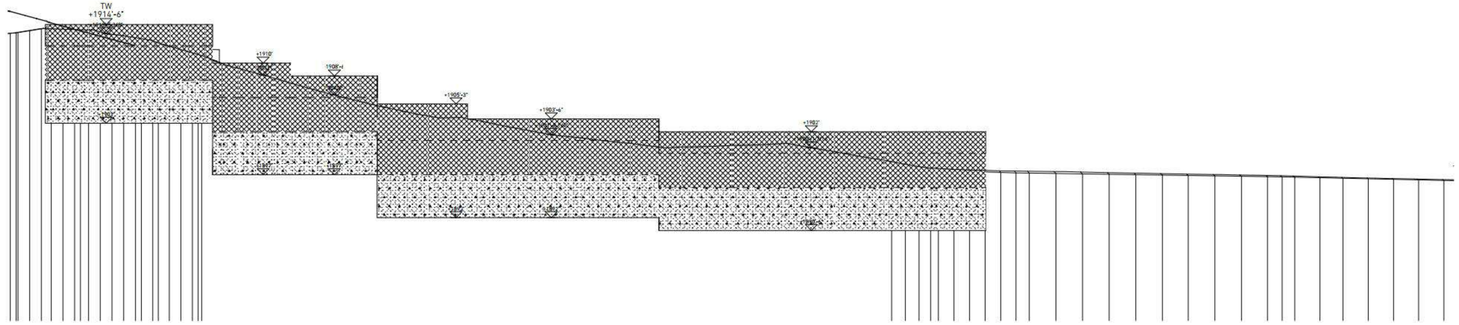

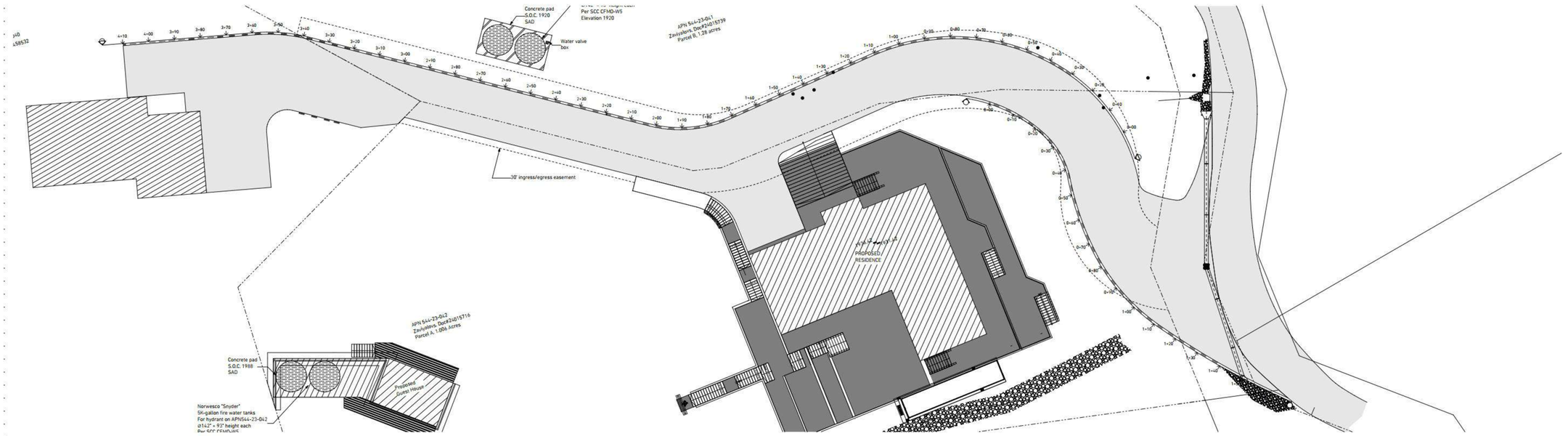

View markers: Curved Retaining walls along common access driveway from Gist Rd to APN544-23-040, 041, 042

GIST RD. SFR 1

APN544-23-041; PROPOSED ADDRESS: 20555 GIST RD, LOS GATOS, CA 95033

REVISION HISTORY

S3DA Structural & Architectural Design
4196 Adams Ave. San Diego CA 92116
(619) 404-0220

Mr. Nader Moavenian
nader.m@s3da-design.com

STAMP

1. The contractor must check all dimensions on-site before commencing work

2. These drawings are to be read in conjunction with all relevant designer, engineer or specialist drawings and specifications

3. The contractor is responsible for providing all necessary temporary support to the building and any adjacent structures

COUNTY APPROVAL STAMP

REVISION DATE
01/02/2021

DRAWING NAME
036 Retaining walls along common access driveway

1" = 20'

C-23-RW

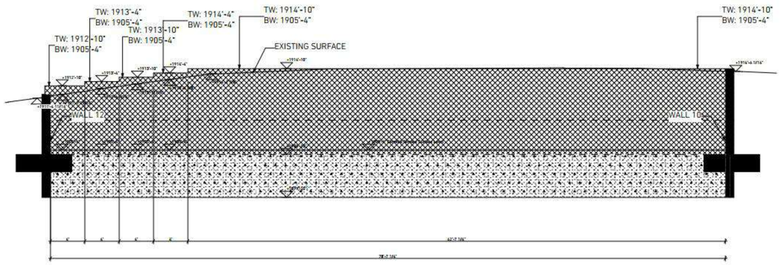

CMU WALL 11. TYPE A

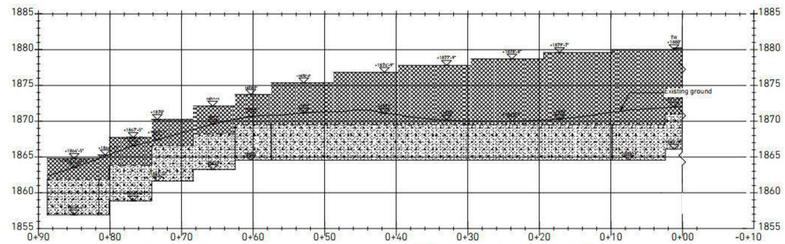

PROFILE: RW1, TYPE A, CURVED RETAINING WALL NORTHERN SIDE OF DRIVEWAY FROM GIST RD TO GARAGE APN544-23-041
SCALE H: 1"=10' SCALE V: 1"=10'

4 VIEW: CW-24-SOUTH; RW7 1" = 10'

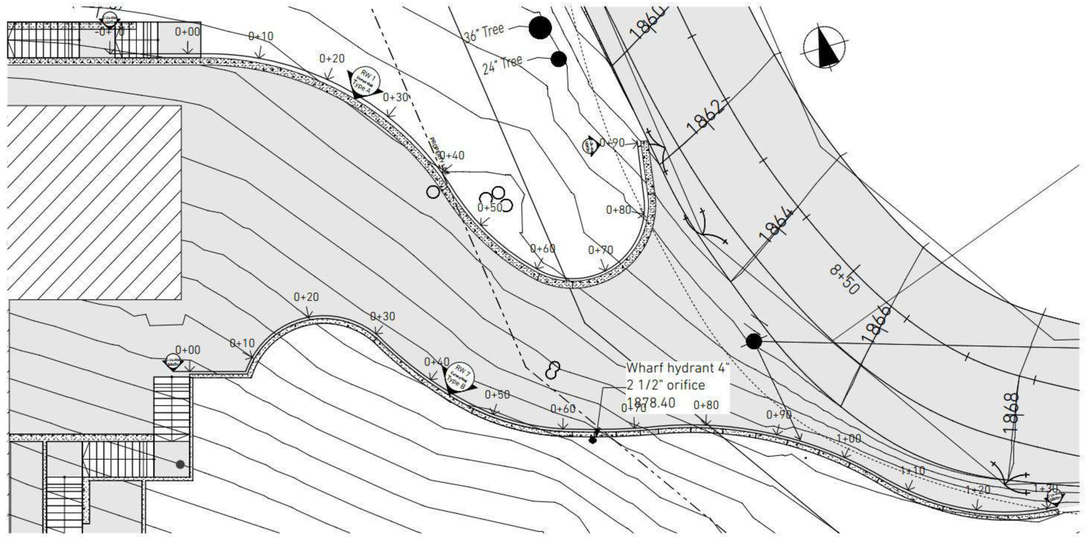

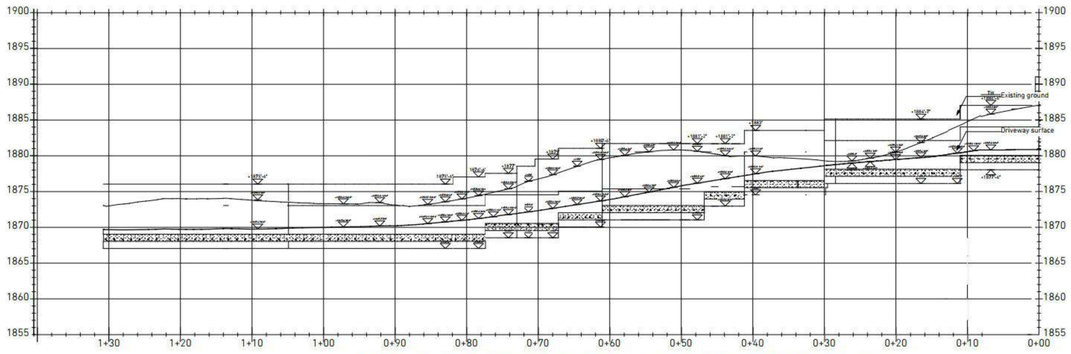

PROFILE: RW7. CURVED RETAINING WALL SOUTHERN SIDE OF DRIVEWAY FROM GIST RD TO GARAGE APN544-23-041
SCALE H: 1"=10' SCALE V: 1"=10'

GIST RD. SFR 1

APN544-23-041; PROPOSED ADDRESS: 20555 GIST RD, LOS GATOS, CA 95033

REVISION HISTORY

S3DA Structural & Architectural Design
4196 Adams Ave. San Diego CA 92116
(619) 404-0220

Mr. Nader Moavenian
nader.m@s3da-design.com

REGISTERED PROFESSIONAL ENGINEER
BARRETT CROCKETT
C 057196
Ex. 12-31-202
CIVIL
STATE OF CALIFORNIA
2-11-2020

1. The contractor must check all dimensions on-site before commencing work

2. These drawings are to be read in conjunction with all relevant designer, engineer or specialist drawings and specifications

3. The contractor is responsible for providing all necessary temporary support to the building and any adjacent structures

COUNTY APPROVAL STAMP

REVISION DATE
02/11/2020

DRAWING NAME
038 RW 11 and RW7 curved; APN544-23-041

Drawing Scale
1" = 10'

C-24-RW

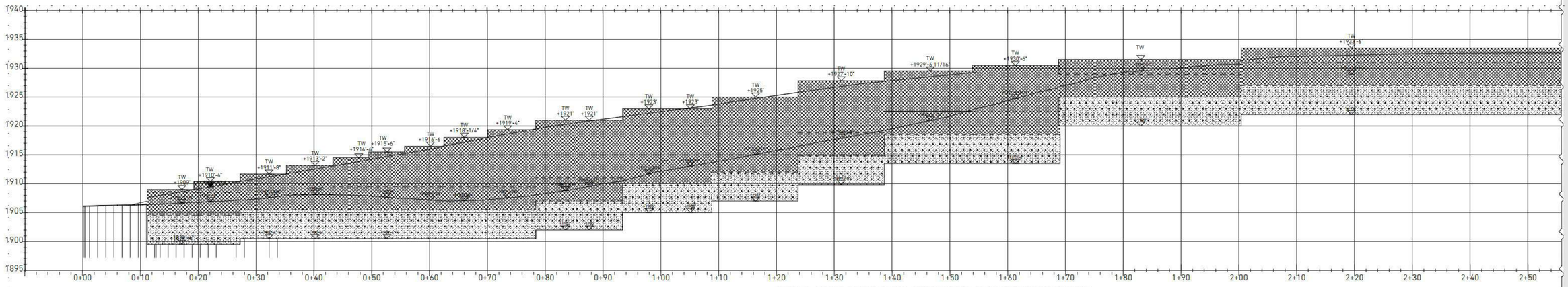

PROFILE: CURVED RETAINING WALL SOUTHERN SIDE OF COMMON ACCESS DRIVEWAY
SCALE H: 1"=10' SCALE V: 1"=10'

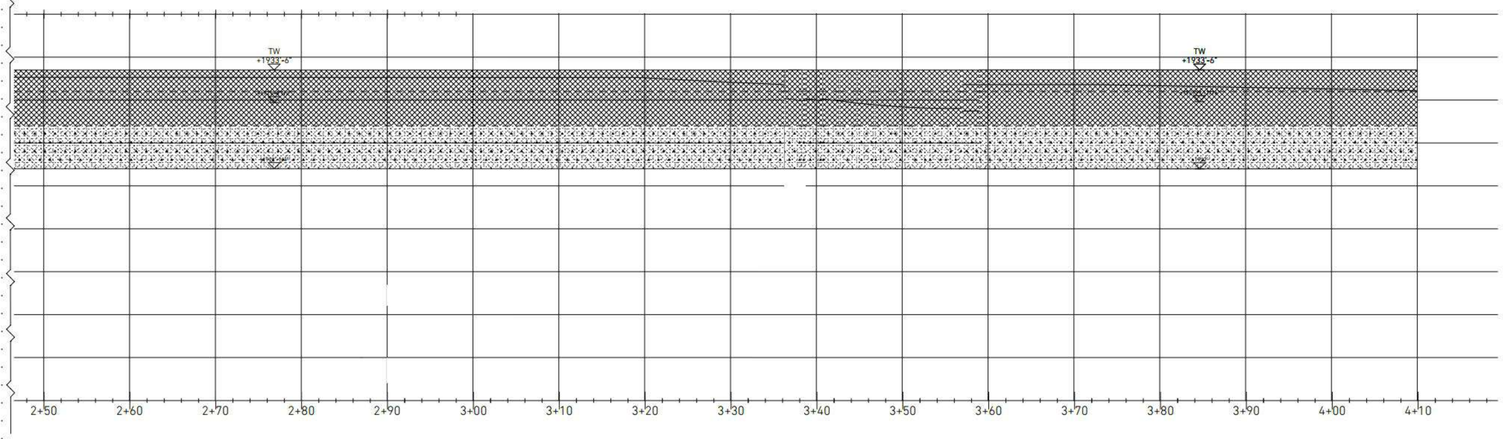

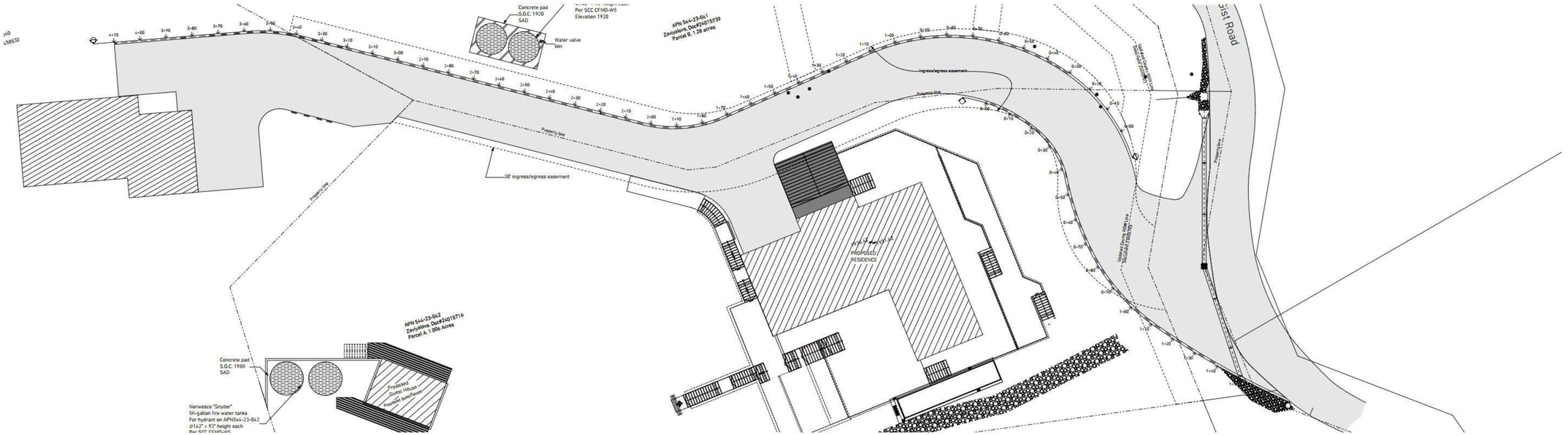

View markers: Curved Retaining walls along common access driveway from Gist Rd to APN544-23-040, 041, 042

GIST RD. SFR 1

APN544-23-041; PROPOSED ADDRESS: 20555 GIST RD, LOS GATOS, CA 95033

REVISION HISTORY

S3DA Structural & Architectural Design
4196 Adams Ave. San Diego CA 92116
(619) 404-0220

Mr. Nader Moavenian
nader.m@s3da-design.com

Civil Engineer: Joanne C. Singer, P.E.

REGISTERED PROFESSIONAL ENGINEER
JOANNE C. SINGER
C 26900
3/31/2021
CIVIL
STATE OF CALIFORNIA

STAMP

1. The contractor must check all dimensions on-site before commencing work

2. These drawings are to be read in conjunction with all relevant designer, engineer or specialist drawings and specifications

3. The contractor is responsible for providing all necessary temporary support to the building and any adjacent structures

COUNTY APPROVAL STAMP

REVISION DATE
01/02/21

DRAWING NAME
037 Retaining wall: common access driveway wall

1" = 20'

C-25-RW

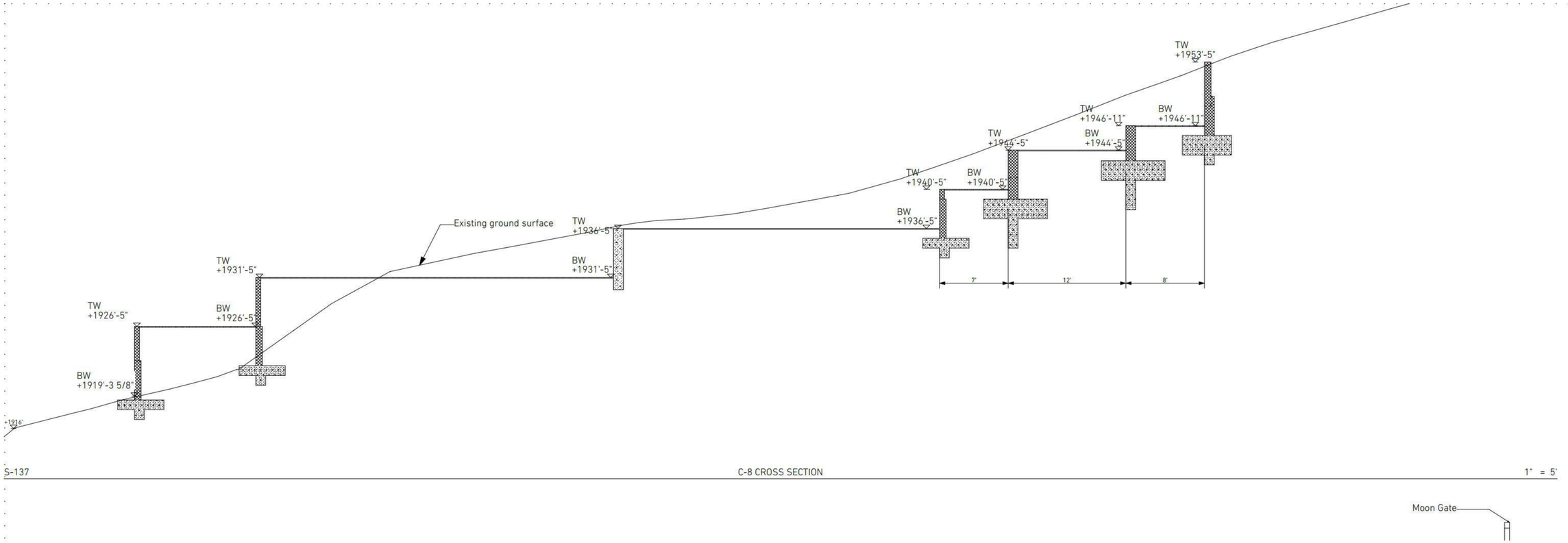

S-137

C-8 CROSS SECTION

1" = 5'

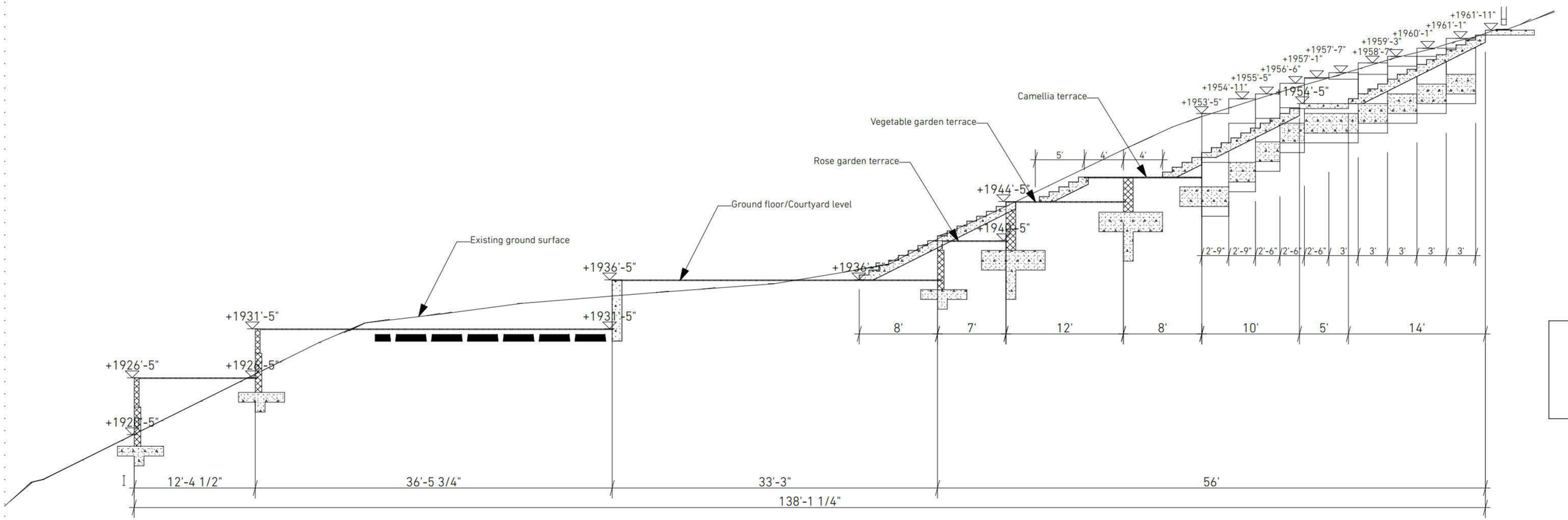

Cross section

1" = 5'

Moon Gate

GIST RD. SFR 1

APN544-23-041; PROPOSED ADDRESS: 20555 GIST RD, LOS GATOS, CA 95033

REVISION HISTORY

S3DA Structural & Architectural Design
4196 Adams Ave. San Diego CA 92116
(619) 404-0220

Mr. Nader Moavenian
nader.m@s3da-design.com

Civil Engineer: Joanne C. Singer, P.E.

REGISTERED PROFESSIONAL ENGINEER
JOANNE C. SINGER
C 26900
3/31/2021
CIVIL
STATE OF CALIFORNIA

STAMP

1. The contractor must check all dimensions on-site before commencing work

2. These drawings are to be read in conjunction with all relevant designer, engineer or specialist drawings and specifications

3. The contractor is responsible for providing all necessary temporary support to the building and any adjacent structures

COUNTY APPROVAL STAMP

REVISION DATE
01/02/21

DRAWING NAME
039 Wall map. Grading APN544-23-042

Drawing Scale
1" = 5'

C-26-RW

TYPE A CMU WALL

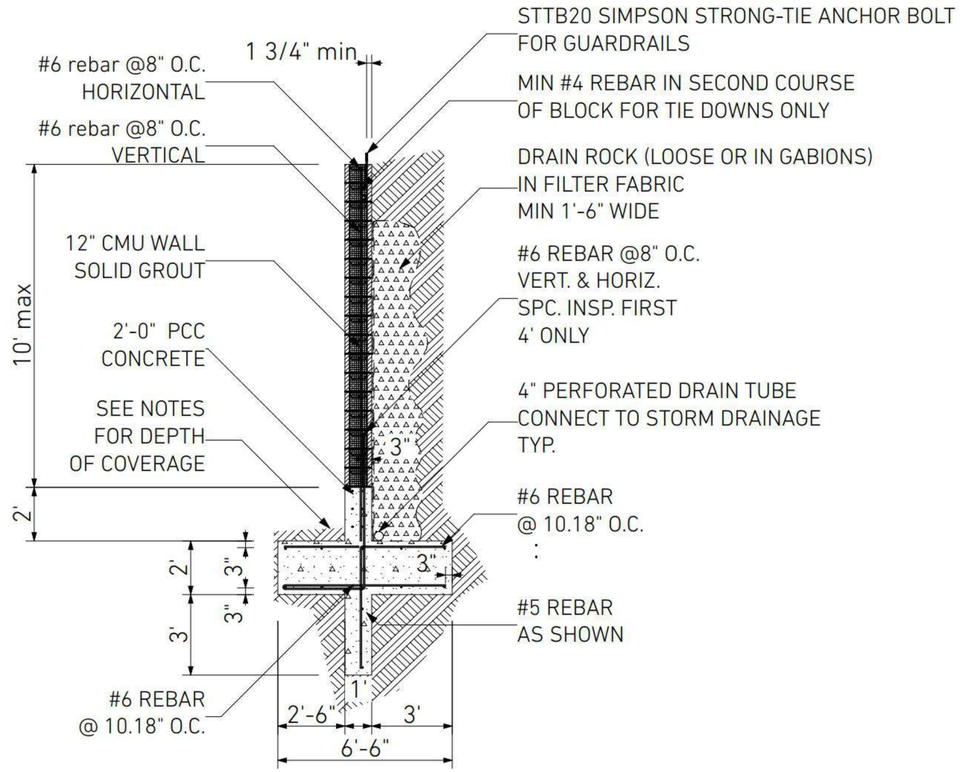

TYPE B CMU WALL

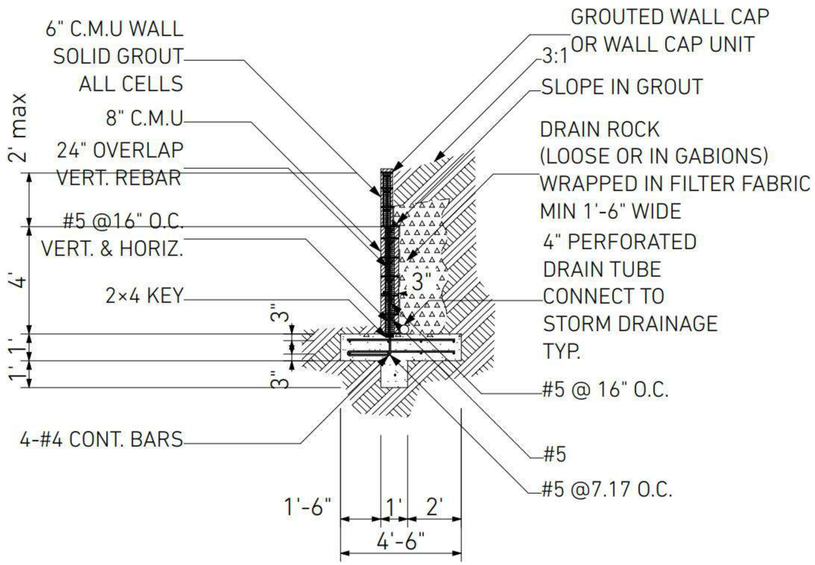

NOTE:
Refer to Structural Calculations document for details

TYPE C CMU WALL

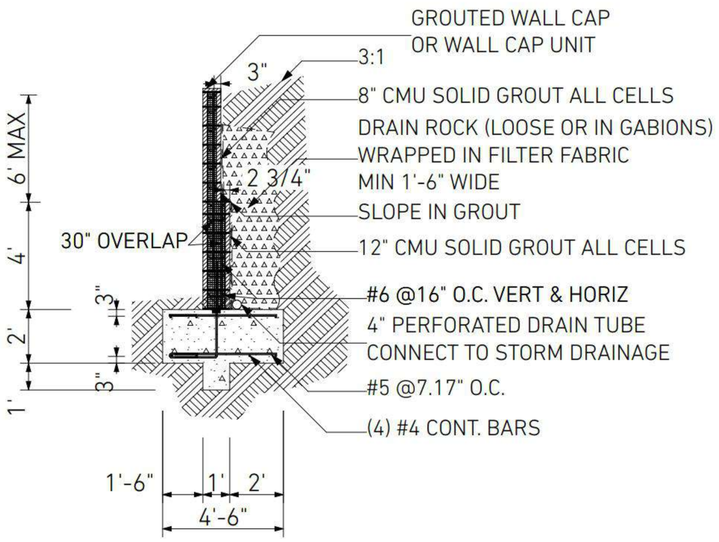

TYPE D CMU WALL

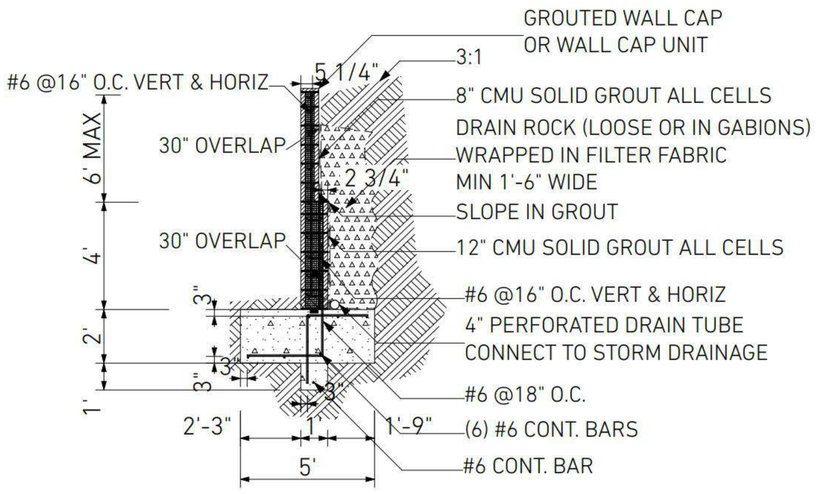

GIST RD. SFR 1

APN544-23-041; PROPOSED ADDRESS: 20555 GIST RD, LOS GATOS, CA 95033

REVISION HISTORY

S3DA Structural & Architectural Design
4196 Adams Ave. San Diego CA 92116
(619) 404-0220

Mr. Nader Moavenian
nader.m@s3da-design.com

Civil Engineer: Joanne C. Singer, P.E.

REGISTERED PROFESSIONAL ENGINEER JOANNE C. SINGER C 26900 3/31/2021 CIVIL STATE OF CALIFORNIA — STAMP

1. The contractor must check all dimensions on-site before commencing work

2. These drawings are to be read in conjunction with all relevant designer, engineer or specialist drawings and specifications

3. The contractor is responsible for providing all necessary temporary support to the building and any adjacent structures

COUNTY APPROVAL STAMP

REVISION DATE
01/02/21

DRAWING NAME
040 Retaining wall sections

Drawing Scale
3/8" = 1'-0"

C-27-RW

DEH service request number SR0865038

PROJECT SCOPE & RATIONALE

The project scope is to construct a new 4BR house on the vacant lot. A drip dispersal septic system was selected due to the prevalence of steep slopes >35% at the property. This design plan is to update a previous drip dispersal design dated March 2014 by Biosphere Consulting. New regulations have taken effect requiring this update, the parcel number has changed from 544-23-003 to 544-23-041, and proposed house footprint is new.

LEGEND

- CHECK VALVE & AIR VENT (IN VALVE BOX)
- SP1 - SOIL PROFILE
- P1-6 - PERCOLATION TEST HOLE
- AIR VACUUM RELIEF VALVE (IN VALVE BOX) OR AIR VENT ON DRIP FIELD SIDE OF ASSEMBLY
- CONCRETE THRUST BLOCK
- SETBACK LINE
- >50% - SLOPE DIRECTION AND PERCENT
- RETURN LINE (COMMON TO BOTH FIELDS)
- SUPPLY LINE FIELD A
- SUPPLY LINE FIELD B
- INSPECTION WELL

INFILTRATIVE AREA CALCULATIONS & SPECIFICATIONS

Peak Design Flow Rate = 525 gpd (4 bedrooms)

DRIP DISPERSAL SYSTEM A	
Average Percolation Rate: 2.5 MPI Application Rate: 1.4 gal/ ft² / day (Table DD-1) Min Infiltrative Area: 375 ft² (525 gpd / 1.4 gpd / ft²) Min # of Emitters Required: 104 (415 ft²/4 ft² per emitter)	Drip line/Emitter Spacing/Depth: 2 ft. / 2 ft. / 12 in Drip field Size: 138 ft² (A1) + 64 ft² (A2) + 213 ft² (A3) =415 ft² Number of Emitters: 113 (1 loop × 40 ft., 1 loop × 39 ft., 1 loop × 50 ft., 1 loop × 58 ft., 2 loops × 20 ft.) Depth to Groundwater: >3 ft. (3 ft. required)

DRIP DISPERSAL SYSTEM B	
Average Percolation Rate: 2.5 MPI Application Rate: 1.4 gal/ ft² / day (Table DD-1) Infiltrative Area: 375 ft² (525 gpd / 1.4 gpd / ft²) Min # of Emitters Required: 94 (375 ft²/4ft² per emitter)	Drip line/Emitter Spacing/Depth: 2 ft. / 2 ft. / 12 in Drip field Size: 385 ft² (B) Number of Emitters: 94 (1 loop × 90 ft., 1 loop × 98 ft.) Depth to Groundwater: >3 ft. (3 ft. required)

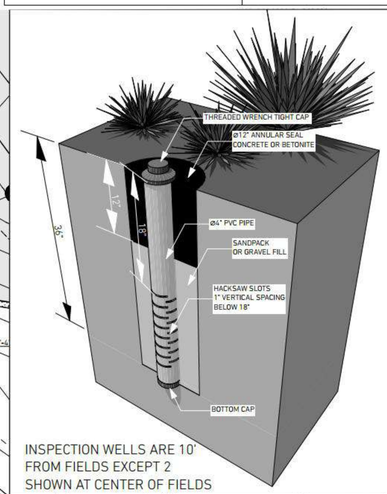

INSPECTION WELLS ARE 10' FROM FIELDS EXCEPT 2 SHOWN AT CENTER OF FIELDS

3D-18 INSPECTION WELL 1:100

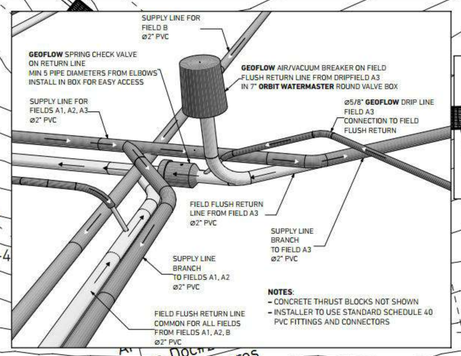

3D-18 SEPTIC PIPING DETAIL 1:100

ANNUAL SEPTIC & PUMP TANKS INSPECTION REQUIRED:

1. ACCESS RISERS & LIDS IN GOOD CONDITION
2. STRUCTURAL INTEGRITY - PROBE INTERIOR WALLS/BAFFLES, INLET/OUTLET T-PIPES
3. CHECK BIO-TUBE EFFLUENT FILTER AND CLEAN IF NEEDED
4. SEPTIC TANK LIQUID LEVEL SHOULD BE AT OUTLET INVERT IN TANK
5. PUMP TANK ELECTRICAL & SIGNAL WIRES IN GOOD CONDITION
6. PUMP TANK PROPER OPERATION OF FLOAT SWITCHES

SEPTIC TANK SHALL BE PUMPED OUT WHENEVER SOLIDS OR FLOATING MATERIAL EXCEED 30% OF TANK VOLUME OR ENCROACH ON INLET/OUTLET T'S.

MINIMUM SEPTIC TANK PUMPING FREQUENCEY IS 3 TO 5 YEARS
PUMP TANK TO BE PUMPED OUT WHEN DEBRIS MAY ENCROACH ON PUMP INTAKE.

ONGOING MONITORING & REPORTING REQUIREMENTS
(MUST BE PERFORMED BY LICENSED PROFESSIONAL OR SERVICE PROVIDER)
YEARS 1-4: SEMI-ANNUALLY
YEARS 5+ OF OPERATION: ANNUALLY

1. RECORD WASTEWATER FLOW BASED ON WATER METER READINGS OR OTHER METHOD
2. MEASUREMENT AND RECORDING OF WATER LEVELS IN INSPECTION WELLS
3. INSPECTION OF PUMP AND VALVES OPERATION, INCLUDING SQUIRT TEST
4. INSPECTION OF DISPERSAL FIELDS FOR SEEPAGE, EROSION, ETC

MONITORING REPORT SHALL BE SIGNED BY LICENSED PROFESSIONAL AND SUBMITTED TO DEH IN ACCORDANCE WITH THE SYSTEM OPERATING PERMIT.

ON-SITE WATER TIGHTNESS TESTING

(REQUIRED PRIOR TO SEPTIC TANK & PUMP TANK USE)

1. FILL TANK TO 2" INTO RISER
2. LET TANK SIT FOR 1 HOUR
3. OBSERVE WATER LEVEL IN RISER BEFORE AND AFTER 1 HR PEIOD
4. IF LEVEL HAS FALLEN, INSPECT FOR LEAKS
5. REPAIR ANY LEAKS AND REPEAT TEST

ANDVANTEX TREATMENT UNIT: INSTALLATION AND ROUTINE ONGOING MAINTENANCE BY ADVANTEX-CERTIFIED SERVICE PROVIDER ONLY

CONSTRUCTION INSPECTIONS REQUIRED WITH DESIGNER & DEH

1. LAYOUT INSPECTION - ALL COMPONENTS STAKED OR PAINTED
2. OPEN TRENCH INSPECTION - COMPONENTS IN & NOT COVERED
3. PUMP TEST - PUMPS, HYDRAULICS, AND ALARMS OPERATIONAL
4. SEPTIC & PUMP TANK WATER TIGHTNESS TESTING
5. FINAL INSPECTION - ALL COMPONENTS COVERED

OWNER RESPONSIBILITY FOR ALTERNATIVE TYPE SEPTIC SYSTEM
OWNER WILL ACKNOWLEDGE THAT THE PROPERTY IS SERVED BY AN ALTERNATIVE DRIP DISPERSAL WITH TREATMENT SEPTIC SYSTEM REQUIRING AN ONGOING SERVICE CONTRACT, MAINTENANCE AND ANNUAL DEH OPERATING PERMIT AND HAVE THIS RECORDED ON THE PROPERTY TITLE AND DEED.

DRIP DISPERSAL SYSTEM MANAGEMENT REQUIREMENTS

	WORK	FREQUENCY
INSPECTION	• CONDUCT ROUTINE VISUAL OBSERVATIONS OF DRIP FIELD, DOWNSLOPE AREA AND SURROUNDINGS FOR WET AREAS, PIPE LEAKS OR DAMAGE, SOIL EROSION, DRAINAGE ISSUES, ABNORMAL VEGETATION, GOPHERS OR OTHER PROBLEMS • CONDUCT ROUTINE PHYSICAL INSPECTIONS OF SYSTEM COMPONENTS, INCLUDING VALVES, FILTERS, AND HEADWORKS BOX. • PERFORM SPECIAL INSPECTIONS OF DRIP FIELD AT TIME OF ANY LANDSCAPING WORK OR OTHER DIGGING IN DRIP FIELD AREA. • PERFORM INSPECTIONS OF DOSING PUMPS AND APPURTENANCES (PER O&M MANUAL AND PERFORMANCE EVALUATION GUIDELINES) • RECORD OBSERVATIONS	• EVERY 6-12 MONTHS
MAINTENANCE	• MANUALLY REMOVE AND CLEAN FILTER • CLEAN AND CHECK OPERATION OF PRESSURE REDUCING VALVES. • CLEAN FLUSH VALVES AND VACUUM RELEASE VALVES.	• CLEAN FILTER EVERY 6 MONTHS • ALL OTHER MAINTENANCE ANNUALLY
WATER SAMPLING	• MEASURE AND RECORD WATER LEVELS IN DISPERSAL FIELD MONITORING WELLS, AS APPLICABLE, PER PERMIT REQUIREMENTS. • OBTAIN AND ANALYZE WATER SAMPLES FROM DISPERSAL FIELD MONITORING WELLS, AS APPLICABLE, PER PERMIT REQUIREMENTS	• ACCORDING TO PERMIT CONDITIONS IF APPLICABLE
REPORTING	• REPORT FINDINGS TO DEH PER PERMIT REQUIREMENTS. • STANDARD REPORT TO INCLUDE DATES, MONITORNING WELL AND OTHER DATA COLLECTED, WORK PERFORMED, CORRECTIVE ACTIONS TAKEN, AND PERFORMANCE SUMMARY • REPORT PUBLIC HEALTH/WATER QUALITY EMERGENCY TO DEH IMMEDIATELY	• ACCORDING TO PERMIT CONDITIONS, TYPICALLY EVERY 1 TO 2 YEARS, DEPENDING ON SYSTEM SIZE, USAGE, HISTORY, LOCATION

GIST RD. SFR 1

APN544-23-041; PROPOSED ADDRESS: 20555 GIST RD, LOS GATOS, CA 95033

REVISION HISTORY

S3DA Structural & Architectural Design
4196 Adams Ave. San Diego CA 92116
(619) 404-0220

Mr. Nader Moavenian
nader.m@s3da-design.com

REGISTERED PROFESSIONAL ENGINEER BARRETT CROCKETT C 057196 Exp. 12/31/2021 CIVIL STATE OF CALIFORNIA
2-11-2020

1. The contractor must check all dimensions on-site before commencing work
2. These drawings are to be read in conjunction with all relevant designer, engineer or specialist drawings and specifications
3. The contractor is responsible for providing all necessary temporary support to the building and any adjacent structures

COUNTY APPROVAL STAMP

REVISION DATE
02/11/2020

DRAWING NAME
041 Drip dispersal septic. APN 544-23-041

Drawing Scale
1:100

H1-OWTS-1

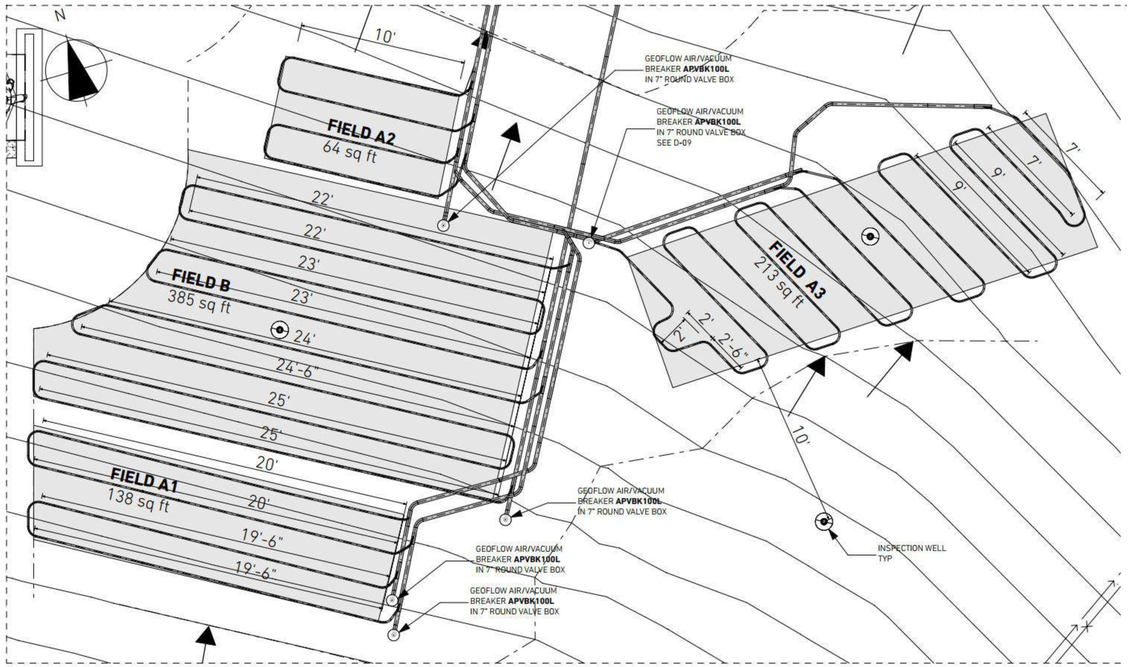

D-11 GEOFLOW DRIPLINE LAYOUT & DIMENSIONS 1:50

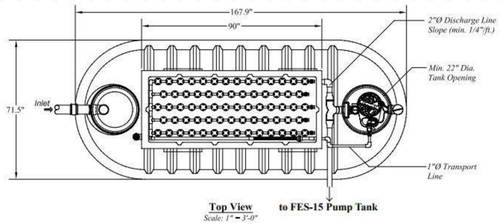

Top View to FES-15 Pump Tank
Scale: 1" = 3'-0"

DEH service request number SR0865038

Design Notes

Expected Flows
- Q_{AVG} = 500 gpd
  Up To 4 Bedrooms

Expected Influent Quality
Grease & Oil: 20 mg/L
BOD: 150 mg/L
TSS: 40 mg/L
TKN: 65 mg/L

Typical Effluent Quality
BOD: < 10 mg/L
TSS: < 10 mg/L
TN: < 25 mg/L

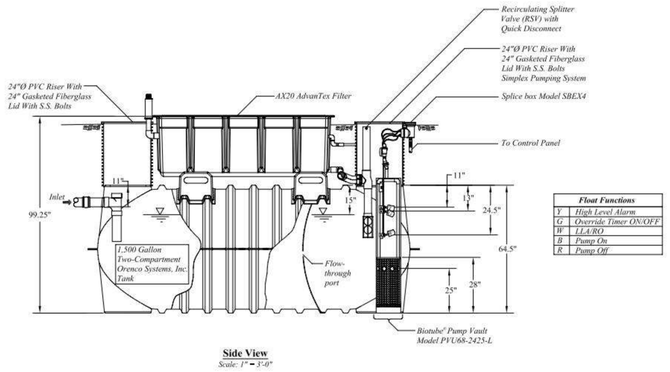

Side View
Scale: 1" = 3'-0"

Float Functions	
V	High Level Alarm
G	Override Timer ON/OFF
W	LLA/RO
B	Pump On
R	Pump Off

Orenco Systems® Incorporated
Changing the Way the World Does Wastewater®

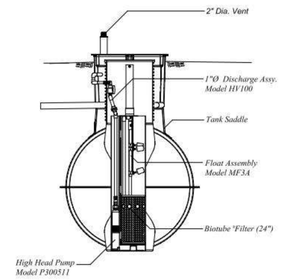

End View
Scale: 1" = 3'-0"

Copyright © 2011 Orenco Systems®, Inc.

ORENCO® ADVANTEX AX20 MODE 1B WITH FIBERGLASS TANK

NOTE: Entire drip field areas must be fenced off during construction to minimize any disturbance to the soil

ALL PVC IS SCHEDULE 40, SOLVENT-WELDED 150 PSI RATED. ELECTRICAL BUILDING PERMIT IS REQUIRED

STEP-BY-STEP INSTALLATION PROCEDURES

1. Stake out all components of system and mark setback lines
2. Prepare drip field area by removing bush and small shrubs using care to minimize soil disturbance when removing roots.
3. Fence off drip field areas to prevent disturbance/compaction of soil. Heavy equipment used for excavation of tank pits may only pass over drip field area twice - for entry and exit to tank area only.
4. Excavate septic tank, treatment unit and pump tank pit. Install units and backfill as per manufacturers' recommendations.
5. Excavate trenching for sewer and septic tight line pipes. Install piping.
6. Excavate trenching for electrical/signal wire conduit. Install wiring.
7. Install drip lines and make connections to supply/return lines. Backfill and compact with tract roller, 2 passes.
   Note: drip lines are typically installed simultaneously with ripping of 12" depth, 2-3" wide drip line trenches.
8. Backfill components, restore proper grading, cover with straw mulch and seed areas.

COORDINATE ALL INSTALLATION STEPS WITH DEH AND DESIGNER

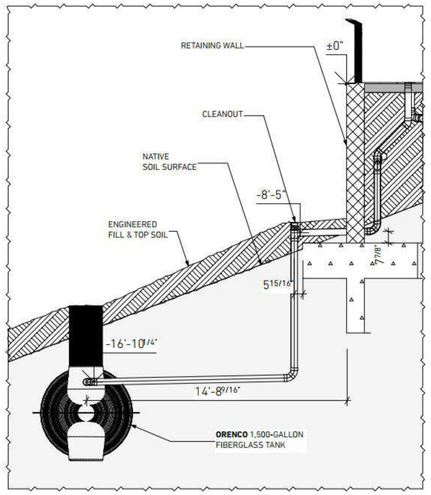

SEPTIC INLET PIPE AND CLEANOUT DETAILS

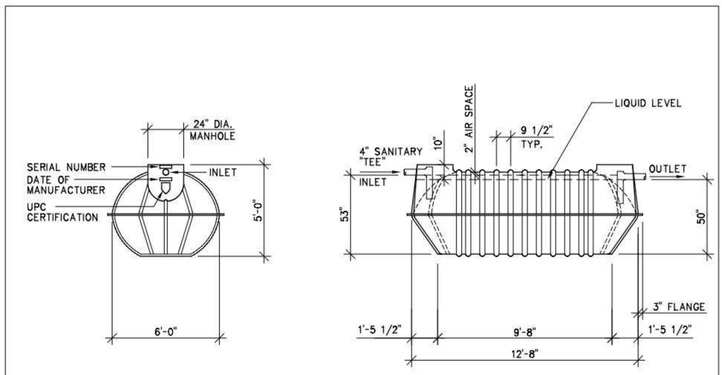

FIBER ENTERPRISES INC.
142 Duggan Road
Redwood City, CA 94062 Fax: 530-527-5098 Fax: 650-363-2385

MODEL	Model number
1,500 GALLON FIBERGLASS SEPTIC TANK	FES-15
SCALE 1/4"=1'-0"	DATE 02-04-08

RECOMMENDED 1,500-GALLON FIBERGLASS PUMP TANK

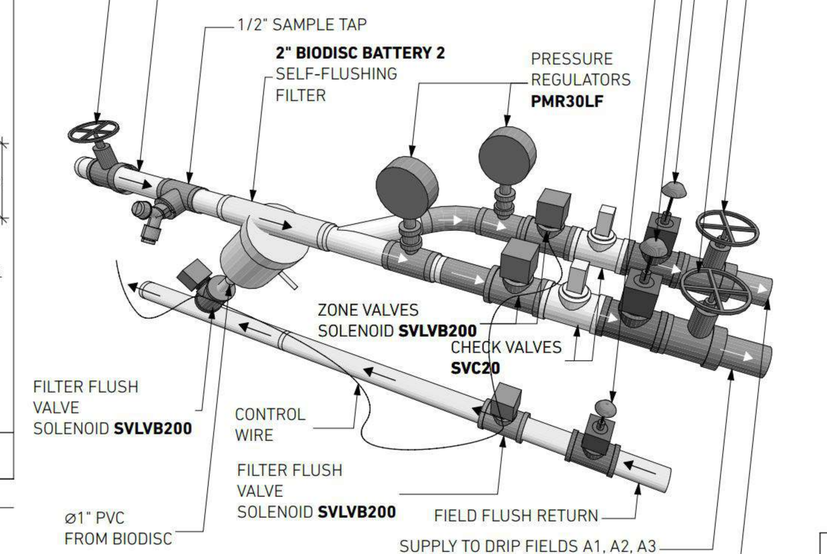

HEADWORKS MANIFOLD ISOMETRIC DIAGRAM. GEOFLOW SPECS. NTS

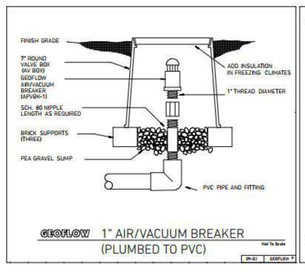

GEOFLOW 1" AIR/VACUUM BREAKER (PLUMBED TO PVC)

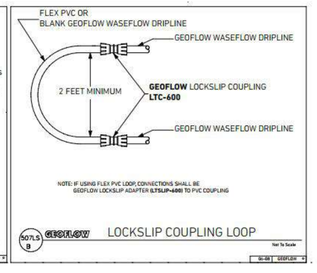

GEOFLOW LOCKSLIP COUPLING LOOP

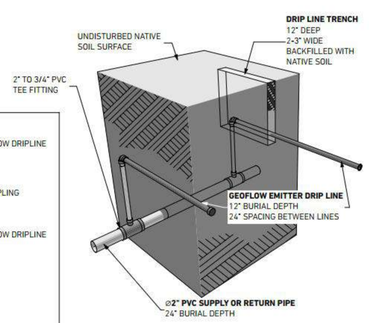

DRIP LINE TRENCH SIZE, BURIAL DEPTHS
EARTH SECTION ISOMETRIC VIEW

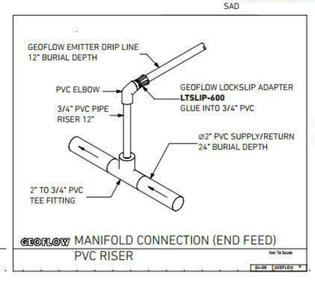

GEOFLOW MANIFOLD CONNECTION (END FEED) PVC RISER

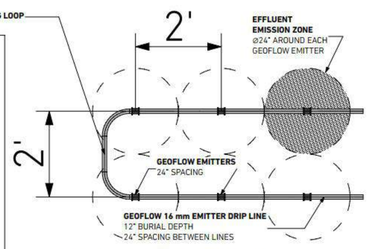

GEOFLOW DRIP LINE EMITTER POSITIONS

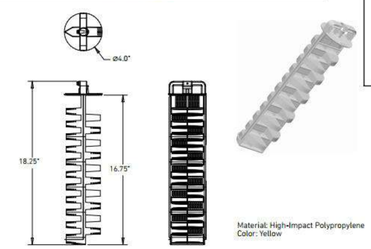

TUF-TITE Drainage and Septic Products
PART NAME: 4" EFFLUENT FILTER
PART #: EF-4

GIST RD. SFR 1

APN544-23-041; PROPOSED ADDRESS: 20555 GIST RD, LOS GATOS, CA 95033

REVISION HISTORY

S3DA Structural & Architectural Design
4196 Adama Ave. San Diego CA 92116
(619) 404-0220
Mr. Nader Moavenian
nader.m@s3da-design.com

REGISTERED PROFESSIONAL ENGINEER BARRETT CROOK C 057186 Exp. 12/31/2021 CIVIL STATE OF CALIFORNIA
2-11-2020

1. The contractor must check all dimensions on-site before commencing work
2. These drawings are to be read in conjunction with all relevant designer, engineer or specialist drawings and specifications
3. The contractor is responsible for providing all necessary temporary support to the building and any adjacent structures

COUNTY APPROVAL STAMP

REVISION DATE
02/11/2020

DRAWING NAME
042 Septic: details, installation.

Drawing Scale

H1 OWTS-2

DEH service request number SR0865038

County of Santa Clara - Department of Environmental Health
SOIL PERCOLATION TEST RECORDED MEASUREMENTS (Electronic Version by Chris Day, R.E.H.S.)

OWNER/APPLICANT:	Denis & Marina Zaviyalov	**SR #:** 865038	**PLN FILE #:**		P. 1 of 1
LOCATION:	Property on Gist Rd, Los Gatos, CA APN 544-23-041		**REHS:**	Ross Kakinami	
CONTACT PERSON:	CHRIS DAY, R.E.H.S.	**PHONE:** 650-293-1045	**DATE:**	1/21/2021	

HOLE #1 — **DEPTH: 18"** *(7" on ruler)*

TIME START	TIME FINISH	WATER LEVEL START	WATER LEVEL FINISH	Δ MIN	Δ INCH	MPI
2:09	2:38	13	DRY	29		
2:39	3:07	14	DRY	28		
3:09	3:19	13 5/8	8 1/2	10	5 1/8	2
3:20	3:30	13 5/8	8 1/2	10	5 1/8	2
3:31	3:41	13 3/4	8 1/2	10	5 1/4	2
3:42	3:52	13 3/4	8 3/8	10	5 3/8	2
3:52	4:02	13 5/8	8 1/2	10	5 1/8	2
4:03	4:13	13 5/8	8 1/2	10	5 1/8	2

HOLE #2 — **DEPTH: 24"** *(7 1/4" on ruler)*

TIME START	TIME FINISH	WATER LEVEL START	WATER LEVEL FINISH	Δ MIN	Δ INCH	MPI
2:11	2:40	13 1/4	DRY	29		
2:41	3:10	13 3/4	DRY	29		
3:11	3:21	13 1/2	9 1/2	10	4	3
3:22	3:32	13 3/4	9 1/2	10	4 1/4	2
3:33	3:43	13 7/8	9 1/2	10	4 3/8	2
3:44	3:54	14	9 1/2	10	4 1/2	2
3:54	4:04	13 7/8	9 1/2	10	4 3/8	2
4:05	4:15	13 7/8	9 1/2	10	4 3/8	2

HOLE #3 — **DEPTH: 12"** *(7" on ruler)*

TIME START	TIME FINISH	WATER LEVEL START	WATER LEVEL FINISH	Δ MIN	Δ INCH	MPI
2:13	2:42	13	DRY	29		
2:43	3:12	13	DRY	29		
3:13	3:23	13 3/4	DRY	10		
3:23	3:33	16	DRY	10		
3:34	3:55	13 1/2	DRY	21		
3:34	3:55	13 1/2	DRY	21		
3:55	4:17	13 1/2	DRY	22		
STOPWATCH READINGS starting at 4:43 p.m. (MIN:SEC)						
0:00	1:09	13	8	1.2	5	0.2
0:00	1:08	13	8	1.1	5	0.2
0:00	1:12	15	10	1.2	5	0.2
TEST HOLE FAILED ADJUSTED STABILIZED RATE <1.0 MPI						

HOLE #4 — **DEPTH: 18"** *(6 1/2" on ruler)*

TIME START	TIME FINISH	WATER LEVEL START	WATER LEVEL FINISH	Δ MIN	Δ INCH	MPI
2:15	2:45	12 1/2	DRY	30		
2:45	3:15	13 1/4	DRY	32		
3:15	3:24	13 3/4	DRY	9		
3:25	3:35	16	DRY	10		
3:35	3:45	13 3/4	DRY	10		
3:45	3:55	13 5/8	DRY	10		
3:55	4:05	13 3/4	DRY	10		
4:05	4:15	14	DRY	10		
STOPWATCH READINGS starting at 4:27 p.m. (MIN:SEC)						
0:00	4:32	12	6	4.5	6	0.8
0:00	4:38	12	6	4.6	6	0.8
0:00	4:33	12	6	4.5	6	0.8

HOLE #5 — **DEPTH: 12"** *(6 3/4" on ruler)*

TIME START	TIME FINISH	WATER LEVEL START	WATER LEVEL FINISH	Δ MIN	Δ INCH	MPI
2:18	2:46	12 3/4	DRY	28		
2:47	3:16	13	DRY	29		
3:17	3:27	13 1/2	DRY	10		
3:27	3:37	13 3/4	DRY	10		
3:38	3:58	13 1/2	DRY	20		
3:58	4:08	13 1/2	DRY	10		
4:08	4:18	13 7/8	DRY	10		
STOPWATCH READINGS starting at 4:22 p.m. (MIN:SEC)						
0:00	2:39	13	7 1/4	2.7	5 3/4	0.5
0:00	2:46	13	7 1/4	2.8	5 3/4	0.5
0:00	2:48	13	7 3/4	2.8	5 1/4	0.5
TEST HOLE FAILED ADJUSTED STABILIZED RATE <1.0 MPI						

HOLE #6 — **DEPTH: 24"** *(6 3/4" on ruler)*

TIME START	TIME FINISH	WATER LEVEL START	WATER LEVEL FINISH	Δ MIN	Δ INCH	MPI
2:20	2:47	13	DRY	27		
2:48	3:18	16 1/4	DRY	30		
3:18	3:28	14 1/4	7 3/4	10	6 1/2	2
3:29	3:39	14 1/2	8 1/4	10	6 1/4	2
3:40	3:50	14 3/8	8 3/8	10	6	2
3:51	4:01	14 1/4	8 3/8	10	5 7/8	2
4:01	4:11	14 1/4	8 1/2	10	5 3/4	2
4:12	4:22	14 1/4	8 3/8	10	5 7/8	2

HOLE		1	2	3	4	5	6
Stabilized MPI	R	2	2	0.2	0.8	0.5	2
Adjusted Stabilized MPI	$R_1 = R \times 1.4$	3	3	0.3	1.1	0.7	3
Average Adjusted Stabilized MPI	$R_2 = (\Sigma R_1)/$ # Holes	1.8					
# Bedrooms 4	FOR OFFICE USE ONLY	Tank Size (Gal)		Leach Line (ft)			

Field Flow Calculations for Drip Field A

Total Quantity of effluent to be disposed per day	**525**	gallons / day
Hydraulic loading rate	**1.4**	gallons / ft² / day
Minimum Dispersal Field Area	**375**	square ft.
Total Dispersal Field Area	**415**	square ft.
Flow per zone		
Number of Zones	**1**	zone(s)
Dispersal area per zone	**415**	square ft.
Line spacing between WASTEFLOW lines	**2**	ft.
Spacing between WASTEFLOW emitters	**2**	ft.
Total linear ft. per zone (minimum required)	**208**	ft. per zone
Total number of emitters per zone	**104**	emitters / zone
Wasteflow drip line (16mm)	**Wasteflow PC 1/2gph**	drip line
Pressure at the beginning of the drip field	**20**	psi
Feet of Head at the beginning of the drip field	**46.2**	ft.
Flow rate per emitter in gph	**0.53**	gph
Dose flow per zone	**0.92**	gpm
Flush velocity	**0.5**	ft. / sec
Lines of WASTEFLOW per zone	**6**	lines
Fill in the *actual* length of longest drip line lateral	**42**	ft.
Flush flow required at the end of each drip line	**0.37**	gpm
Total flow required to achieve flushing velocity	**2.22**	gpm
Total flow per zone – worst-case scenario	**3.14**	gpm
Filters and zone valves		
Filter Type	**BioDisc Self Flushing Battery**	
Recommended Filter (item no.)	**BioDisc Battery 2**	40-70 gpm / 40 psi
Zone Valve Type	**Electric Solenoid**	
Dosing		
Number of doses per day / zone:	**12**	doses
Timer ON. Pump run time per dose/zone:	**47.44**	mins:secs
Timer OFF. Pump off time between doses	**1:12**	hrs:mins
Per Zone - Pump run time per day/zone:	**9:32**	hrs:mins
All Zones - Number of doses per day / all zones	**12**	doses / day
Allow time for field to pressurize	**0:00:30**	hrs:mins:sec
Filter flush timer	**0:00:20**	hrs:mins:sec
Drain timer	**0:05:00**	hrs:mins:sec
Field flush timer	**0:01:00**	hrs:mins:sec
Field flush counter	**3**	cycles
Time required to complete all functions per day	**10:54**	hrs:mins
Dose volume per zone	**44**	gallons per dose

Field Flow Calculations for Drip Field B

Total Quantity of effluent to be disposed per day	**525**	gallons / day
Hydraulic loading rate	**1.4**	gallons / ft² / day
Minimum Dispersal Field Area	**375**	square ft.
Total Dispersal Field Area	**385**	square ft.
Flow per zone		
Number of Zones	**1**	zone(s)
Dispersal area per zone	**385**	square ft.
Line spacing between WASTEFLOW lines	**2**	ft.
Spacing between WASTEFLOW emitters	**2**	ft.
Total linear ft. per zone (minimum required)	**188**	ft. per zone
Total number of emitters per zone	**94**	emitters / zone
Wasteflow drip line (16mm)	**Wasteflow PC ½ gph**	drip line
Pressure at the beginning of the drip field	**20**	psi
Feet of Head at the beginning of the drip field	**46.2**	ft.
Flow rate per emitter in gph	**0.53**	gph
Dose flow per zone	**0.85**	gpm
Flush velocity	**0.5**	ft. / sec
Lines of WASTEFLOW per zone	**6**	lines
Fill in the *actual* length of longest drip line lateral	**42**	ft.
Flush flow required at the end of each drip line	**0.37**	gpm
Total flow required to achieve flushing velocity	**2.22**	gpm
Total flow per zone – worst-case scenario	**3.07**	gpm
Filters and zone valves		
Filter Type	**BioDisc Self Flushing Battery**	
Recommended Filter (item no.)	**BioDisc Battery 2**	40-70 gpm / 40 psi
Zone Valve Type	**Electric Solenoid**	
Dosing		
Number of doses per day / zone:	**12**	doses
Timer ON. Pump run time per dose/zone:	**51.27**	mins:secs
Timer OFF. Pump off time between doses	**1:08**	hrs:mins
Per Zone - Pump run time per day/zone:	**10:17**	hrs:mins
All Zones - Number of doses per day / all zones	**12**	doses / day
Allow time for field to pressurize	**0:00:30**	hrs:mins:sec
Filter flush timer	**0:00:20**	hrs:mins:sec
Drain timer	**0:05:00**	hrs:mins:sec
Field flush timer	**0:01:00**	hrs:mins:sec
Field flush counter	**3**	cycles
Time required to complete all functions per day	**11:39**	hrs:mins
Dose volume per zone	**44**	gallons per dose

PUMP SELECTION CALCULATIONS & GEOFLOW WORKSHEET INPUTS

Some lengths & elevations are exaggerated for conservative calculation. All PVC is Schedule 40
Note that calculations for Fields A1-A3 will be sufficient to ensure requirements for Field B are met due to higher elevation, longer run and more emitters than Field B. Since Field B has longer lateral lines, the length of longest line in Field B, rather than longest line in Fields A1-A3, was used for conservative calculation

Section	Parameter values	Note
FLOW RATES	3.14 gpd (A), 3.07 gpd (B)	from Geoflow Worksheet
PRESSURE	108 ft	from Geoflow and below calculation
Formula	$f = L(Q/L)^{1.85}$	from COWA Manual, p. 154
A. 2" Flush Line	Equivalent Length of Fittings: 142 ft	
	2" Solenoid in Headworks: 0 ft	
	Return line length: 250 ft	
	Elevation change: 10 ft	1897' – 1887' uphill run at A3, other sections are downhill runs
	T-Thru Runs (8): 8 x 4 ft = 32 ft	
	T-Branch Runs (2): 2 x 12 ft = 24 ft	
	3/4"-2" pipe expansion = 42 ft	
B. 16 mm Drip line	Length of Longest Lateral: 106 ft	96 ft emitter line + 3 ft blank tubing + 3 ft PVC to supply/return + 4 ft for 2x90° 3/4" PVC
C. Drip Components	2" Solenoid head loss is zero	from Geoflow head loss chart
	Equivalent Length Headworks Fittings is 39 ft	(2 x Gate Valve) + 19 ft (Check valve) + 12 ft (T-branch) + 5.5 ft (90° elbow)=39 ft
	Headloss due to Equivalent Length of fittings = 0.0 ft	39 ft $(3.2 \text{ gpm} / 284.5)^{1.85}$ = 0.0 ft
D. Supply Line	Length of Supply Line: 225 ft	5 ft in tank, 220 ft across manifold and to further points of A1 & A3
	Equivalent Length of Fittings: 1,270 ft	6*90° + 2*45° (38 ft) // 1*T-Branch, 12 ft)//5*T-Thru (20 ft) // 3/4"-2" fitting at lateral (1,200 ft)
	Lift in Pump Tank: 5 ft	
	Elevation Change: 45 ft	1,908' - 1,863'

These design points (3.2 gpm & 3.07 gpm @ 108 ft) are labeled on the performance curve for the selected pump:
FRANKLIN High Head Filtered Submersible Effluent Pump - 10LE05P4 - 2W115 (115 V, 1/2 HP)

DESIGN POINTS
3.07 GPM
3.2 GPM
@ 108 ft

The design points are under the curve for the selected pump. Therefore hydraulic requirements will be met.

FRANKLIN ELECTRIC® SCHAEFER E-SERIES
High Head Filtered Submersible Effluent Pump **10LE05P4 - 2W115**
115 V, 1/2 HP

GIST RD. SFR 1
APN544-23-041; PROPOSED ADDRESS: 20555
GIST RD, LOS GATOS, CA 95033

LOG OF BORING BH - 3

DATE DRILLED 05/08/2019	LOGGED/CHECKED BY: Igor Kleyner	APPROX. SURFACE ELEVATION (FT) 1931'
DRILLING METHOD Power Auger/Auger	DRILLED BIT SIZE 2"/3"	TOTAL DEPTH OF BOREHOLE (FT) 6'6"
GROUNDWATER LEVEL/DATE MEASURED No groundwater detected	SAMPLING METHOD(S) Disturbed	HAMMER DATA Dynamic Cone Penetration Test
BOREHOLE BACKFILL Native soil/Cement	LOCATION 20241 Gist Road, Los Gatos, CA. Toe of bank.	APN: 544-23-003

DEPTH (FT)	SAMPLE TYPE	SAMPLING RESISTANCE (BLOWS/FOOT) SPT EQ	RELATIVE HARDNESS/ CONSISTENCY	SOIL/ROCK TYPE	MOISTURE CONTENT %	MATERIAL DESCRIPTION
1		45	Dense	SM	10.40	Light brown, silty sandy soil with rock debris
3		50+	Very dense	SC	10.78	Light brown, clayey sandy soil with sandstone/siltstone material
5			Moderately hard bedrock to Hard			Severe to moderately weathered siltstone/sandstone bedrock, brown presumable of San Lorenzo formation
6'6"						Boring terminated @ 6'6" where less weathered bedrock is encountered

MTR INC	PROJECT ADDRESS: 20241 Gist Road Los Gatos, CA	LOG OF BORING BH - 3
	PROJECT NO.: 2019-501 — DATE: 2019 May	APPENDIX A

LOG OF BORING BH - 7

DATE DRILLED 05/08/2019	LOGGED/CHECKED BY: Igor Kleyner	APPROX. SURFACE ELEVATION (FT) 1866'
DRILLING METHOD Power Auger/Auger	DRILLED BIT SIZE 2"/3"	TOTAL DEPTH OF BOREHOLE (FT) 4'6"
GROUNDWATER LEVEL/DATE MEASURED No groundwater detected	SAMPLING METHOD(S) Disturbed	HAMMER DATA Dynamic Cone Penetration Test
BOREHOLE BACKFILL Native soil/Cement	LOCATION 20241 Gist Road, Los Gatos, CA. APN: 544-23-003	

DEPTH (FT)	SAMPLE TYPE	SAMPLING RESISTANCE (BLOWS/FOOT) SPT EQ	RELATIVE HARDNESS/ CONSISTENCY	SOIL/ROCK TYPE	MOISTURE CONTENT %	MATERIAL DESCRIPTION
0						Top soil
0.5		21	Medium dense to Dense	SM	12.11	Sandy silty soil, mixed with very severely weathered siltstone/sandstone
2		50+	Very dense	SM	14.63	Brown, silty sandy soil with bedrock debris
3			Moderately severe to hard bedrock			Severely to moderate weathered brown, sandy bedrock with fine silt seams
4.5						Boring terminated @ 4.5 feet where less weathered moderateky hard bedrock is encountered

MTR INC	PROJECT ADDRESS: 20241 Gist Road Los Gatos, CA	LOG OF BORING BH - 7
	PROJECT NO.: 2019-501 — DATE: 2019 May	APPENDIX A

Worksheet - Pump Sizing - DRIP FIELDS A1, A2, A3

Section 1 - Summary from Worksheet 1			
Flow required to dose field	**0.92**	gpm	
Flow required to flush field	**2.22**	gpm	
Flow required to dose & flush field	**3.14**	gpm	
Filter	**BioDisc Battery 2**		
No. of Zones	**1**	zone	
Drip line	**Wasteflow PC - ½ gph**		
Drip line longest lateral	**40.00**	ft.	
Section 2	**Ft of head**		**Pressure**
A. Flush line - Losses through return line			
Select Pipe from dropdown menu	**PVC schedule 40**		
Select Flush Line Diameter	**2"**	inch	
Length of return line	**250**	ft.	
Equivalent length of fittings	**142**	ft.	
Elevation change. (if downhill enter 0)	**10**	ft.	
Pressure loss in 100 ft of pipe	**0.01**	ft.	0.01 psi
Total pressure loss from end of drip line to return tank	***10.1***	*ft.*	4.35 psi
B. Drip line - Losses through Wasteflow drip line			
Length of longest drip line lateral	**106**	ft.	
Minimum dosing pressure required at end of drip line	**23.10**	ft.	10.00 psi
Loss through drip line during flushing	**1.13**	ft.	0.49 psi
Total minimum required drip line pressure	***24.23***	*ft.*	10.49 *psi*
A+B. Minimum Pressure required at beginning of drip field			
CALCULATED pressure required at beginning of drip field	***34.29***	*ft.*	14.84 *psi*
SPECIFIED pressure at beginning of drip field (from worksheet 1)	**46.2**	**ft.**	20.00 *psi*
Great! SPECIFIED Pressure is greater than CALCULATED Pressure requirement.			
C. Drip components - Losses through headworks			
Filter	**11.1**	ft.	4.80 psi
Total loss through drip components	**11.1**	**ft.**	4.80 psi
D. Supply line - Minimum Pressure head required to get from pump tank to top of drip field			
Pipe type	**PVC schedule 40**		
Supply line diameter	**2"**		
Length of supply line	**225**	ft.	
Equivalent length of fittings	**1270**	ft.	
Height from pump to tank outlet	**5**	ft.	
Elevation change	**45**	ft.	
Pressure loss/gain in 100 ft. of pipe	**0.03**	ft.	0.01 psi
Total gain or loss from pump to field	***50.4***	***ft.***	21.82 psi
Total dynamic head	**107.7**	**ft.**	46.62 *psi*
Pump capacity * - Field Flush Flow	**3.1**	**gpm**	46.62 *psi*
- Field Dose Flow	**0.9**	**gpm**	
- Filter Flush Flow	**40.0**	**gpm**	40.00 *psi*
Pump Model Number	**FRANKLIN 10LE05P4 - 2W115**		
Volts / Hp / phase	**115 /1/2 /1**		

1500-GALLON FIBERGLASS TANK

Liquid depth (in)		Gallons in tank
64		1800
63		-
62		-
61		-
60		1765
59		1748
58		1730
57		1709
56		1687
55		1664
54		1640
53		1615
52		1589
51		1561
50	**FULL**	**1532**
49		1502
48		1471
47		1439
46		1407
45		1374
44		1340
43		1305
42		1270
41		1234
40		1198
39		1162
38		1126
37		1089
36		1052
35		1015
34		977
33		939
32		900
31		861
30		823
29		785
28		748
27		711
26		674
25		638
24		602
23		566
22		530
21		495
20		460
19		426
18	**ALARM**	**393**
17		361
16	**ON**	**329**
15		298
14	**OFF**	**268**
13		235
12		211
11		185
10		160
9		136
8		113
7		91
6		70
5		52
4		35
3		-
2		-
1		-
Floor		0

1

Soil Analysis Test Data

APN 544-23-041 (SR0865038)	Test Conducted on 1/20/2021
Gist Rd, Los Gatos	By Chris Day, R.E.H.S. Tel. 650-293-1045
Owner: Denis & Marina Zaviyalov	Witnessed by Ross Kakinami, R.E.H.S.

Soil Profile Test Hole #1 — Depth: 4 ft.

0 to 8 inches 1st Soil Horizon	Sandy Loam Roots Coarse & Common Pores Coarse & Common Weak Subangular Structure About 30% Rock Dry Condition of Soil Color Dark Grey No Mottling	Not Restrictive
8 to 48 inches 2nd Soil Horizon	Sandy Clay Roots Medium & Few Pores Medium & Common Weak Subangular Structure About 50% Rock Dry Condition of Soil Color Medium Tan No Mottling	Not Restrictive

Soil Profile Test Hole #2 — Depth: 4 ft.

0 to 12 inches 1st Soil Horizon	Loam Clay Roots Medium & Common Pores Medium & Medium Weak Subangular Structure Less Than 15% Rock Moist Condition of Soil Color Dark Brown No Mottling	Not Restrictive
12 to 48 inches 2nd Soil Horizon	Clay Sand Roots Medium & Few Pores Coarse & Common Weak Subangular Structure About 50% Rock (increasing w/ depth) Dry Condition of Soil Color Light Tan No Mottling	Not Restrictive

REVISION HISTORY

S3DA Structural & Architectural Design
4196 Adams Ave. San Diego CA 92116
(619) 404-0220

Mr. Nader Moavenian
nader.m@s3da-design.com

REGISTERED PROFESSIONAL ENGINEER
BARRETT C CROOK
C 057196
Exp. 12.31.2021
CIVIL
STATE OF CALIFORNIA
2-11-2020

1. The contractor must check all dimensions on-site before commencing work

2. These drawings are to be read in conjunction with all relevant designer, engineer or specialist drawings and specifications

3. The contractor is responsible for providing all necessary temporary support to the building and any adjacent structures

COUNTY APPROVAL STAMP

REVISION DATE
02/11/2020
DRAWING NAME
043 Calcs, perc & soil tests. 544-23-041
Drawing Scale

H1 OWTS-3

DEH service request number SR0865038

ANNUAL SEPTIC & PUMP TANKS INSPECTION REQUIRED:

1. ACCESS RISERS & LIDS IN GOOD CONDITION
2. STRUCTURAL INTEGRITY - PROBE INTERIOR WALLS/BAFFLES, INLET/OUTLET T-PIPES
3. CHECK BIO-TUBE EFFLUENT FILTER AND CLEAN IF NEEDED
4. SEPTIC TANK LIQUID LEVEL SHOULD BE AT OUTLET INVERT IN TANK
5. PUMP TANK ELECTRICAL & SIGNAL WIRES IN GOOD CONDITION
6. PUMP TANK PROPER OPERATION OF FLOAT SWITCHES

SEPTIC TANK SHALL BE PUMPED OUT WHENEVER SOLIDS OR FLOATING MATERIAL EXCEED 30% OF TANK VOLUME OR ENCROACH ON INLET/OUTLET T'S.

MINIMUM SEPTIC TANK PUMPING FREQUENCY IS 3 TO 5 YEARS
PUMP TANK TO BE PUMPED OUT WHEN DEBRIS MAY ENCROACH ON PUMP INTAKE.

ONGOING MONITORING & REPORTING REQUIREMENTS
(MUST BE PERFORMED BY LICENSED PROFESSIONAL OR SERVICE PROVIDER)
YEARS 1-4: SEMI-ANNUALLY
YEARS 5+ OF OPERATION: ANNUALLY

1. RECORD WASTEWATER FLOW BASED ON WATER METER READINGS OR OTHER METHOD
2. MEASUREMENT AND RECORDING OF WATER LEVELS IN INSPECTION WELLS
3. INSPECTION OF PUMP AND VALVES OPERATION, INCLUDING SQUIRT TEST
4. INSPECTION OF DISPERSAL FIELDS FOR SEEPAGE, EROSION, ETC

MONITORING REPORT SHALL BE SIGNED BY LICENSED PROFESSIONAL AND SUBMITTED TO DEH IN ACCORDANCE WITH THE SYSTEM OPERATING PERMIT.

ON-SITE WATER TIGHTNESS TESTING

(REQUIRED PRIOR TO SEPTIC TANK & PUMP TANK USE)

1. FILL TANK TO 2" INTO RISER
2. LET TANK SIT FOR 1 HOUR
3. OBSERVE WATER LEVEL IN RISER BEFORE AND AFTER 1 HR PEIOD
4. IF LEVEL HAS FALLEN, INSPECT FOR LEAKS
5. REPAIR ANY LEAKS AND REPEAT TEST

ANDVANTEX TREATMENT UNIT: INSTALLATION AND ROUTINE ONGOING MAINTENANCE BY ADVANTEX-CERTIFIED SERVICE PROVIDER ONLY

CONSTRUCTION INSPECTIONS REQUIRED WITH DESIGNER & DEH

1. LAYOUT INSPECTION - ALL COMPONENTS STAKED OR PAINTED
2. OPEN TRENCH INSPECTION - COMPONENTS IN & NOT COVERED
3. PUMP TEST - PUMPS, HYDRAULICS, AND ALARMS OPERATIONAL
4. SEPTIC & PUMP TANK WATER TIGHTNESS TESTING
5. FINAL INSPECTION - ALL COMPONENTS COVERED

OWNER RESPONSIBILITY FOR ALTERNATIVE TYPE SEPTIC SYSTEM
OWNER WILL ACKNOWLEDGE THAT THE PROPERTY IS SERVED BY AN ALTERNATIVE DRIP DISPERSAL WITH TREATMENT SEPTIC SYSTEM REQUIRING AN ONGOING SERVICE CONTRACT, MAINTENANCE AND ANNUAL DEH OPERATING PERMIT AND HAVE THIS RECORDED ON THE PROPERTY TITLE AND DEED.

LEGEND

- CHECK VALVE & AIR VENT (IN VALVE BOX)
- SP1 - SOIL PROFILE
- P1-6 - PERCOLATION TEST HOLE
- AIR VACUUM RELIEF VALVE (IN VALVE BOX) OR AIR VENT ON DRIP FIELD SIDE OF ASSEMBLY
- CONCRETE THRUST BLOCK
- SETBACK LINE
- >50% - SLOPE DIRECTION AND PERCENT
- RETURN LINE (COMMON TO BOTH FIELDS)
- SUPPLY LINE FIELD A
- SUPPLY LINE FIELD B
- INSPECTION WELL

DRIP DISPERSAL SYSTEM MANAGEMENT REQUIREMENTS

	WORK	FREQUENCY
INSPECTION	• CONDUCT ROUTINE VISUAL OBSERVATIONS OF DRIP FIELD, DOWNSLOPE AREA AND SURROUNDINGS FOR WET AREAS, PIPE LEAKS OR DAMAGE, SOIL EROSION, DRAINAGE ISSUES, ABNORMAL VEGETATION, GOPHERS OR OTHER PROBLEMS • CONDUCT ROUTINE PHYSICAL INSPECTIONS OF SYSTEM COMPONENTS, INCLUDING VALVES, FILTERS, AND HEADWORKS BOX. • PERFORM SPECIAL INSPECTIONS OF DRIP FIELD AT TIME OF ANY LANDSCAPING WORK OR OTHER DIGGING IN DRIP FIELD AREA. • PERFORM INSPECTIONS OF DOSING PUMPS AND APPURTENANCES (PER O&M MANUAL AND PERFORMANCE EVALUATION GUIDELINES) • RECORD OBSERVATIONS	• EVERY 6-12 MONTHS
MAINTENANCE	• MANUALLY REMOVE AND CLEAN FILTER • CLEAN AND CHECK OPERATION OF PRESSURE REDUCING VALVES. • CLEAN FLUSH VALVES AND VACUUM RELEASE VALVES.	• CLEAN FILTER EVERY 6 MONTHS • ALL OTHER MAINTENANCE ANNUALLY
WASTEWATER SAMPLES	• MEASURE AND RECORD WATER LEVELS IN DISPERSAL FIELD MONITORING WELLS, AS APPLICABLE, PER PERMIT REQUIREMENTS. • OBTAIN AND ANALYZE WATER SAMPLES FROM DISPERSAL FIELD MONITORING WELLS, AS APPLICABLE, PER PERMIT REQUIREMENTS	• ACCORDING TO PERMIT CONDITIONS IF APPLICABLE
REPORTING	• REPORT FINDINGS TO DEH PER PERMIT REQUIREMENTS. • STANDARD REPORT TO INCLUDE DATES, MONITORNING WELL AND OTHER DATA COLLECTED, WORK PERFORMED, CORRECTIVE ACTIONS TAKEN, AND PERFORMANCE SUMMARY • REPORT PUBLIC HEALTH/WATER QUALITY EMERGENCY TO DEH IMMEDIATELY	• ACCORDING TO PERMIT CONDITIONS, TYPICALLY EVERY 1 TO 2 YEARS, DEPENDING ON SYSTEM SIZE, USAGE, HISTORY, LOCATION

PROJECT SCOPE & RATIONALE

The project scope is to construct a new 3BR house with an ADU on the vacant lot. A drip dispersal septic system was selected due to the prevalence of steep slopes >35% at the property. This design plan is to update a previous drip dispersal design dated March 2014 by Biosphere Consulting. New regulations have taken effect requiring this update, the parcel number has changed from 544-23-002 to 544-23-042, and proposed house footprint is new.

3D-13 VACCUUM VALVE ON SUPPLY LINE TO FIELD A 1:100

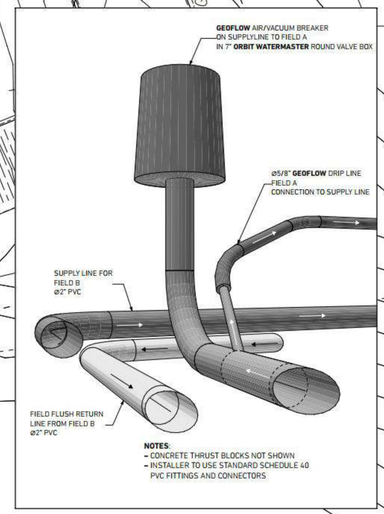

3D-10 INSPECTION WELL 1:100

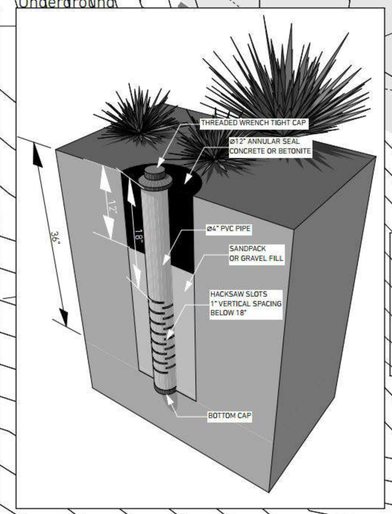

GIST RD. SFR 1

APN544-23-041; PROPOSED ADDRESS: 20555 GIST RD, LOS GATOS, CA 95033

REVISION HISTORY

S3DA Structural & Architectural Design
4196 Adams Ave. San Diego CA 92116
(619) 404-0220

Mr. Nader Moavenian
nader.m@s3da-design.com

REGISTERED PROFESSIONAL ENGINEER
BARRETT CROOK
C 057199
Exp. 12-31-2021
CIVIL
STATE OF CALIFORNIA

2-11-2020

1. The contractor must check all dimensions on-site before commencing work

2. These drawings are to be read in conjunction with all relevant designer, engineer or specialist drawings and specifications

3. The contractor is responsible for providing all necessary temporary support to the building and any adjacent structures

COUNTY APPROVAL STAMP

REVISION DATE
02/11/2020

DRAWING NAME
044 SFR2. Drip dispersal septic. APN 544-23-042

Drawing Scale

H2 OWTS-1

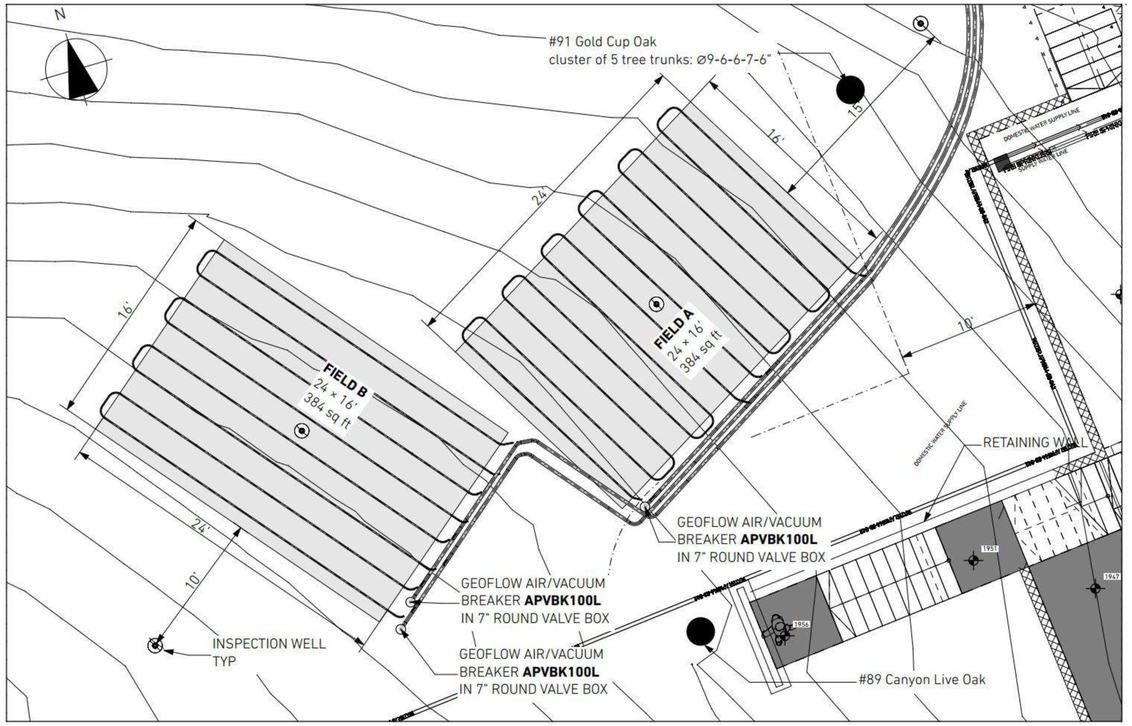

D-14 ARGENTUM GEOFLOW DRIPLINE LAYOUT & DIMENSIONSGEOFLOW DRIPLINE LAYOUT & DIMENSIONS 1:50

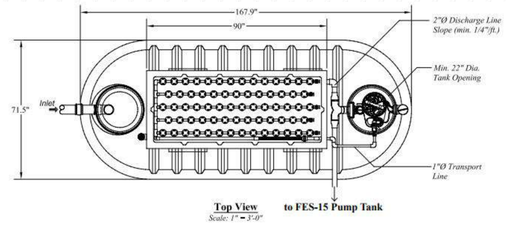

Top View to FES-15 Pump Tank
Scale: 1" = 3'-0"

DEH service request number SR0865038

Design Notes

Expected Flows
- Q_{AVG} = 500 gpd
  Up To 4 Bedrooms

Expected Influent Quality
Grease & Oil: 20 mg/L
BOD: 150 mg/L
TSS: 40 mg/L
TKN: 65 mg/L

Typical Effluent Quality
BOD: < 10 mg/L
TSS: < 10 mg/L
TN: < 25 mg/L

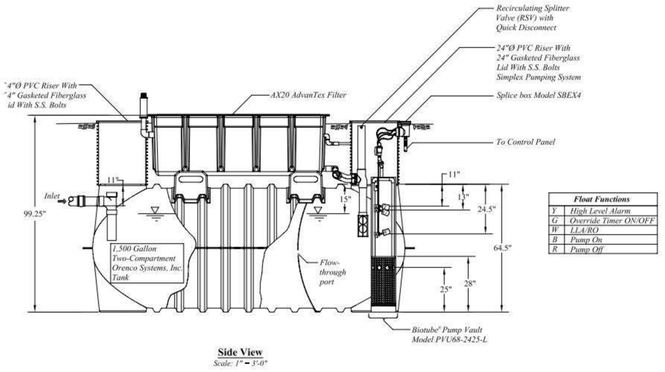

Side View
Scale: 1" = 3'-0"

Float Functions	
V	High Level Alarm
G	Override Timer ON/OFF
W	LLA/RO
B	Pump On
R	Pump Off

Orenco Systems® Incorporated
Changing the Way the World Does Wastewater®

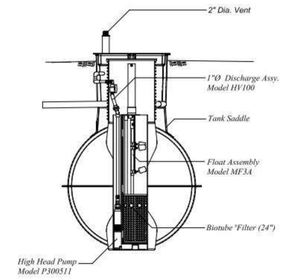

End View
Scale: 1" = 3'-0"

Copyright © 2011
Orenco Systems®, Inc.

ORENCO® ADVANTEX AX20 MODE 1B WITH FIBERGLASS TANK

NOTE: Entire drip field areas must be fenced off during construction to minimize any disturbance to the soil

ALL PVC IS SCHEDULE 40, SOLVENT-WELDED 150 PSI RATED. ELECTRICAL BUILDING PERMIT IS REQUIRED

STEP-BY-STEP INSTALLATION PROCEDURES

1. Stake out all components of system and mark setback lines
2. Prepare drip field area by removing bush and small shrubs using care to minimize soil disturbance when removing roots.
3. Fence off drip field areas to prevent disturbance/compaction of soil. Heavy equipment used for excavation of tank pits may only pass over drip field area twice - for entry and exit to tank area only.
4. Excavate septic tank, treatment unit and pump tank pit. Install units and backfill as per manufacturers' recommendations.
5. Excavate trenching for sewer and septic tight line pipes. Install piping.
6. Excavate trenching for electrical/signal wire conduit. Install wiring.
7. Install drip lines and make connections to supply/return lines. Backfill and compact with tract roller, 2 passes.
   Note: drip lines are typically installed simultaneously with ripping of 12" depth, 2-3" wide drip line trenches.
8. Backfill components, restore proper grading, cover with straw mulch and seed areas.

COORDINATE ALL INSTALLATION STEPS WITH DEH AND DESIGNER

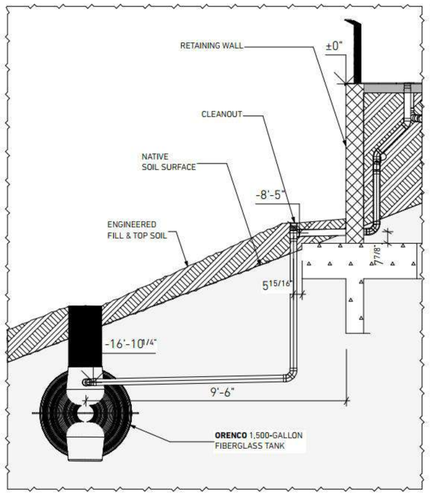

SEPTIC INLET PIPE AND CLEANOUT DETAILS

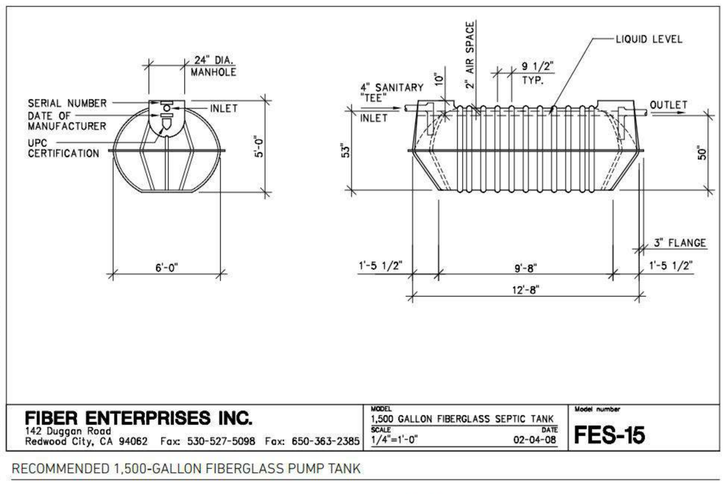

FIBER ENTERPRISES INC.
142 Duggan Road
Redwood City, CA 94062 Fax: 530-527-5098 Fax: 650-363-2385

MODEL: 1,500 GALLON FIBERGLASS SEPTIC TANK
SCALE: 1/4"=1'-0" DATE: 02-04-08
Model number: **FES-15**

RECOMMENDED 1,500-GALLON FIBERGLASS PUMP TANK

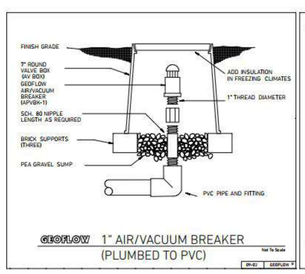

GEOFLOW 1" AIR/VACUUM BREAKER (PLUMBED TO PVC)

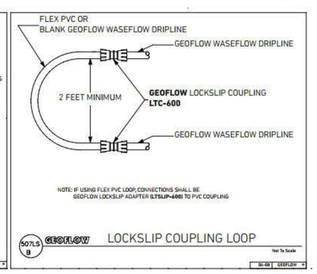

GEOFLOW LOCKSLIP COUPLING LOOP

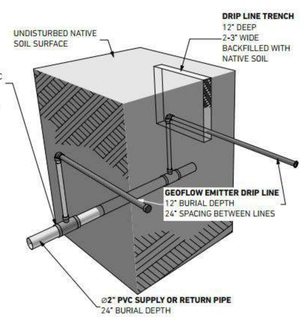

DRIP LINE TRENCH SIZE, BURIAL DEPTHS
EARTH SECTION ISOMETRIC VIEW

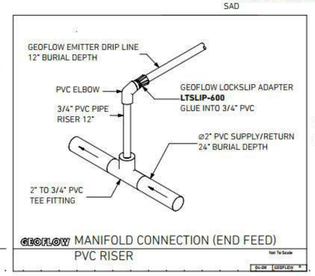

GEOFLOW MANIFOLD CONNECTION (END FEED)
PVC RISER

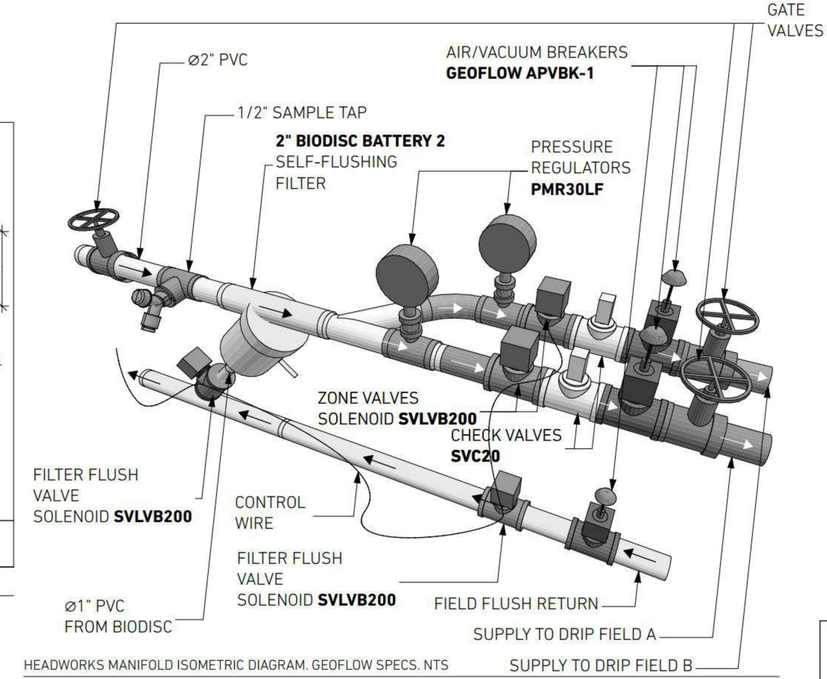

HEADWORKS MANIFOLD ISOMETRIC DIAGRAM. GEOFLOW SPECS. NTS

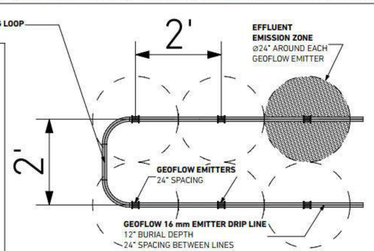

GEOFLOW DRIP LINE EMITTER POSITIONS

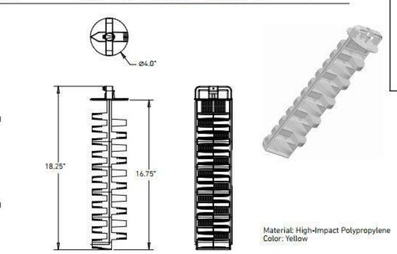

TUF-TITE Drainage and Septic Products
PART NAME: 4" EFFLUENT FILTER
PART #: EF-4

GIST RD. SFR 1

APN544-23-041; PROPOSED ADDRESS: 20555 GIST RD, LOS GATOS, CA 95033

REVISION HISTORY

S3DA Structural & Architectural Design
4196 Adams Ave. San Diego CA 92116
(619) 404-0220

Mr. Nader Moavenian
nader.m@s3da-design.com

REGISTERED PROFESSIONAL ENGINEER
GARRETT C. GROOM
C 057196
Exp. 12-31-2021
CIVIL
STATE OF CALIFORNIA

2-11-2020

1. The contractor must check all dimensions on-site before commencing work

2. These drawings are to be read in conjunction with all relevant designer, engineer or specialist drawings and specifications

3. The contractor is responsible for providing all necessary temporary support to the building and any adjacent structures

COUNTY APPROVAL STAMP

REVISION DATE
02/11/2020

DRAWING NAME
045 SFR2 Septic: details, installation. 544-23-042

H2 OWTS-2

DEH service request number SR0865038

Santa Clara County--Department of Environmental Health
SOIL PERCOLATION TEST RECORDED MEASUREMENTS

OWNER/APPLICANT: John Knights / BioSphere Consulting, Inc.	**FILE#:**	**APN: 544-23-002**
LOCATION: Gist Road	**REHS: Loc Tran**	
CONTACT PERSON: Andrew Brownstone, PG	**PHONE: (831) 430-9116**	**DATE: 11/26/13**

HOLE # PH-1 — DEPTH: 1.73' — WATER LEVEL — TARGET: 3.06

TIME START	TIME FINISH	WATER LEVEL START	WATER LEVEL FINISH	ΔMIN	ΔINCH	MPI
10:55:00 AM	11:11:00 AM	4.07	4.57	0:16	6.00	2.67
11:32:00 AM	12:13:00 PM	3.41	4.91	0:41	18.00	2.28
12:18:00 PM	12:48:00 PM	3.44	4.91	0:30	17.64	1.70
1:02:30 PM	1:12:30 PM	3.14	4.15	0:10	12.12	0.83
1:54:00 PM	2:04:00 PM	3.14	4.14	0:10	12.00	0.83
2:10:15 PM	2:20:15 PM	3.14	4.12	0:10	11.76	0.85
2:21:15 PM	2:31:15 PM	3.14	4.13	0:10	11.88	0.84
2:33:00 PM	2:43:00 PM	3.14	4.12	0:10	11.76	0.85

HOLE # PH-2 — DEPTH: 2.03' — WATER LEVEL

TIME START	TIME FINISH	WATER LEVEL START	WATER LEVEL FINISH	ΔMIN	ΔINCH	MPI
11:01:00 AM	11:11:00 AM	4.33	4.54	0:10	2.52	3.97
11:01:00 AM	11:33:00 AM	4.33	4.6	0:32	3.24	9.88
11:37:00 AM	12:14:00 PM	3.35	4.59	0:37	14.88	2.49
12:20:00 PM	12:50:00 PM	3.34	4.55	0:30	14.52	2.07
1:01:00 PM	1:31:00 PM	3.33	4.53	0:30	14.40	2.08
1:33:00 PM	2:03:00 PM	3.31	4.51	0:30	14.40	2.08
2:06:00 PM	2:36:00 PM	3.33	4.49	0:30	13.92	2.16
2:37:00 PM	3:07:00 PM	3.33	4.47	0:30	13.68	2.19

HOLE # PH-3 — DEPTH: 2.16' — WATER LEVEL

TIME START	TIME FINISH	WATER LEVEL START	WATER LEVEL FINISH	ΔMIN	ΔINCH	MPI
11:03:00 AM	11:13:00 AM	4.62	4.77	0:10	1.80	5.56
11:03:00 AM	11:38:00 AM	4.62	4.96	0:35	4.08	8.58
11:40:00 AM	12:15:00 PM	3.66	4.78	0:35	14.64	2.39
12:23:00 PM	12:53:00 PM	3.54	4.65	0:30	13.32	2.25
12:55:00 PM	1:25:00 PM	3.6	4.65	0:30	12.60	2.38
1:27:00 PM	1:57:00 PM	3.61	4.64	0:30	12.36	2.43
1:58:30 PM	2:28:30 PM	3.58	4.62	0:30	12.48	2.40
2:30:00 PM	3:00:00 PM	3.59	4.61	0:30	12.24	2.45
3:02:00 PM	3:32:00 PM	3.59	4.6	0:30	12.12	2.48

HOLE # PH-4 — DEPTH: 1.77' — WATER LEVEL

TIME START	TIME FINISH	WATER LEVEL START	WATER LEVEL FINISH	ΔMIN	ΔINCH	MPI
11:04:00 AM	11:14:00 AM	4.46	4.51	0:10	0.60	16.67
11:04:00 AM	11:41:00 AM	4.46	4.59	0:37	1.56	23.72
11:46:00 AM	12:16:00 PM	3.56	4.41	0:30	10.20	2.94
12:26:00 PM	12:56:00 PM	3.55	4.39	0:30	10.08	2.98
1:05:00 PM	1:35:00 PM	3.5	4.36	0:30	10.32	2.91
1:37:30 PM	2:07:30 PM	3.5	4.35	0:30	10.20	2.94
2:08:30 PM	2:38:30 PM	3.48	4.38	0:30	10.80	2.78
2:39:30 PM	3:09:30 PM	3.48	4.32	0:30	10.08	2.98
3:11:00 PM	3:41:00 PM	3.48	4.34	0:30	10.32	2.91

HOLE # PH-5 — DEPTH: 2.59' — WATER LEVEL

TIME START	TIME FINISH	WATER LEVEL START	WATER LEVEL FINISH	ΔMIN	ΔINCH	MPI
11:06:00 AM	11:15:00 AM	4.55	5.05	0:09	6.00	1.50
12:01:00 PM	12:34:00 PM	3.6	5.05	0:33	17.40	1.90
12:43:00 PM	1:08:00 PM	3.54	5.05	0:25	18.12	1.38
1:10:00 PM	1:20:00 PM	3.53	4.99	0:10	17.52	0.57
1:30:00 PM	1:40:00 PM	3.53	4.98	0:10	17.40	0.57
1:41:45 PM	1:51:45 PM	3.54	4.98	0:10	17.28	0.58

HOLE # PH-6 — DEPTH: 1.50' — WATER LEVEL

TIME START	TIME FINISH	WATER LEVEL START	WATER LEVEL FINISH	ΔMIN	ΔINCH	MPI
11:08:00 AM	11:18:00 AM	4.42	5.73	0:10	15.72	0.64
12:27:00 PM	12:57:00 PM	3.38	4.82	0:30	17.28	1.74
1:15:00 PM	1:45:00 PM	3.45	4.82	0:30	16.44	1.82
1:48:00 PM	2:18:00 PM	3.45	4.84	0:30	16.68	1.80
2:19:00 PM	2:49:00 PM	3.45	4.83	0:30	16.56	1.81
2:50:00 PM	3:20:00 PM	3.45	4.82	0:30	16.44	1.82

HOLE		1	2	3	4	5	6	
Stabilized MPI	R	0.85	2.19	2.48	2.91	0.58	1.82	
Adjusted Stabilized MPI	R_1=R x 1.4	**1.19**	**3.07**	**3.47**	**4.07**	**0.81**	**2.55**	
Avg. Adj. Stabilized MPI	R_2=ΣR_1/ #Holes							**2.53**
# Bedrooms:	FOR OFFICE USE ONLY	TANK SIZE (Gal)			Leach Line (Ft)			

Field Flow Calculations for Drip Field A

Total Quantity of effluent to be disposed per day	525	gallons / day
Hydraulic loading rate	1.4	gallons / ft² / day
Minimum Dispersal Field Area	375	square ft.
Total Dispersal Field Area	384	square ft.

Flow per zone

Number of Zones	1	zone(s)
Dispersal area per zone	384	square ft.
Line spacing between WASTEFLOW lines	2	ft.
Spacing between WASTEFLOW emitters	2	ft.
Total linear ft. per zone (minimum required)	188	ft. per zone
Total number of emitters per zone	96	emitters / zone
Wasteflow drip line (16mm)	Wasteflow PC ½ gph	drip line
Pressure at the beginning of the drip field	20	psi
Feet of Head at the beginning of the drip field	46.2	ft.
Flow rate per emitter in gph	0.53	gph
Dose flow per zone	0.85	gpm
Flush velocity	0.5	ft. / sec
Lines of WASTEFLOW per zone	2	lines
Fill in the actual length of longest drip line lateral	96	ft.
Flush flow required at the end of each drip line	0.37	gpm
Total flow required to achieve flushing velocity	0.74	gpm
Total flow per zone – worst-case scenario	1.59	gpm

Filters and zone valves

Filter Type	BioDisc Self Flushing Battery	
Recommended Filter (item no.)	BioDisc Battery 2	40-70 gpm / 40 psi
Zone Valve Type	Electric Solenoid	

Dosing

Number of doses per day / zone:	8.6	doses
Timer ON. Pump run time per dose/zone:	71.59	mins:secs
Timer OFF. Pump off time between doses	1:35	hrs:mins
Per Zone - Pump run time per day/zone:	10:19	hrs:mins
All Zones - Number of doses per day / all zones	8.6	doses / day
Allow time for field to pressurize	0:00:30	hrs:mins:sec
Filter flush timer	0:00:20	hrs:mins:sec
Drain timer	0:05:00	hrs:mins:sec
Field flush timer	0:05:00	hrs:mins:sec
Field flush counter	3	cycles
Time required to complete all functions per day	11:52	hrs:mins
Dose volume per zone	61	gallons per dose

Field Flow Calculations for Drip Field B

Total Quantity of effluent to be disposed per day	525	gallons / day
Hydraulic loading rate	1.4	gallons / ft² / day
Minimum Dispersal Field Area	375	square ft.
Total Dispersal Field Area	384	square ft.

Flow per zone

Number of Zones	1	zone(s)
Dispersal area per zone	384	square ft.
Line spacing between WASTEFLOW lines	2	ft.
Spacing between WASTEFLOW emitters	2	ft.
Total linear ft. per zone (minimum required)	192	ft. per zone
Total number of emitters per zone	144	emitters / zone
Wasteflow drip line (16mm)	Wasteflow PC 1/2gph	drip line
Pressure at the beginning of the drip field	20	psi
Feet of Head at the beginning of the drip field	46.2	ft.
Flow rate per emitter in gph	0.53	gph
Dose flow per zone	1.27	gpm
Flush velocity	0.5	ft. / sec
Lines of WASTEFLOW per zone	4	lines
Fill in the actual length of longest drip line lateral	48	ft.
Flush flow required at the end of each drip line	0.37	gpm
Total flow required to achieve flushing velocity	1.48	gpm
Total flow per zone – worst-case scenario	2.75	gpm

Filters and zone valves

Filter Type	BioDisc Self Flushing Battery	
Recommended Filter (item no.)	BioDisc Battery 2	40-70 gpm / 40 psi
Zone Valve Type	Electric Solenoid	

Dosing

Number of doses per day / zone:	8.6	doses
Timer ON. Pump run time per dose/zone:	47.60	mins:secs
Timer OFF. Pump off time between doses	1:59	hrs:mins
Per Zone - Pump run time per day/zone:	6:52	hrs:mins
All Zones - Number of doses per day / all zones	8.6	doses / day
Allow time for field to pressurize	0:00:30	hrs:mins:sec
Filter flush timer	0:00:20	hrs:mins:sec
Drain timer	0:05:00	hrs:mins:sec
Field flush timer	0:01:00	hrs:mins:sec
Field flush counter	3	cycles
Time required to complete all functions per day	8:52	hrs:mins
Dose volume per zone	61	gallons per dose

PUMP SELECTION CALCULATIONS & GEOFLOW WORKSHEET INPUTS

Some lengths & elevations are exaggerated for conservative calculation. All PVC is Schedule 40
Note that calculations for Field B will be sufficient to ensure requirements for Field A are met due to higher elevation, longer run and more emitters in Field B. Since Field A has longer lateral lines, the length of these longer lines was used for conservative calculation

Section	Parameter values	Note
FLOW RATES	1.6 gpd (A), 2.08 gpd (B)	from Geoflow Worksheet
PRESSURE	161 ft.	from Geoflow and below calculation
Formula	$f = L(Q/L)^{1.85}$	from COWA Manual, p. 154
A. 2" Flush Line	Equivalent Length of Fittings: 127 ft.	
	2" Solenoid in Headworks: 0 ft.	
	Return line length: 300 ft.	
	Elevation change: 0 ft.	downhill run
	T-Thru Runs (8): 6×4 ft.=24 ft.	
	T-Branch Runs (2): 1×12 ft.=12 ft.	
	3/4"-2" pipe expansion =42 ft.	
	$8\times90°+2\times45°=8\times5.5$ ft.+2×2.5 ft.=49 ft.	
B. 16 mm Drip line	Length of Longest Lateral: 106 ft.	96 ft. emitter line+3 ft. blank tubing+3 ft PVC to supply/return+4 ft. for 2x90° 3/4" PVC
C. Drip Components	2" Solenoid head loss is zero	from Geoflow head loss chart
	Equivalent Length Headworks Fittings is 39 ft.	2.4 ft. (2 x Gate Valve) + 19 ft.(Check valve) + 12 ft.(T-branch) + 5.5 ft. (90°elbow)=39ft.
	Headloss due to Equivalent Length of fittings = 0.0 ft.	$39 \text{ ft. } (3.2 \text{ gpm} / 284.5)^{1.85} = 0.0$ ft.
D. Supply Line	Length of Supply Line: 255 ft.	5 ft. in tank, 250 ft. across manifold and to further points of Field B
	Equivalent Length of Fittings: 1,310 ft.	$6\times90°+2\times45°$(38 ft.)// 5×T-Branch, 60 ft.)//3×T-Thru (12 ft.) // 3/4"-2" fitting at lateral (1,200 ft.)
	Lift in Pump Tank: 5 ft.	
	Elevation Change: 59 ft.	1,972' - 1,913'

These design points (1.6 gpm & 2.8 gpm @ 161 ft.) are labeled on the performance curve for the selected pump:
FRANKLIN High Head Filtered Submersible Effluent Pump - 10LE05P4 - 2W115 (115 V, 1/2 HP)

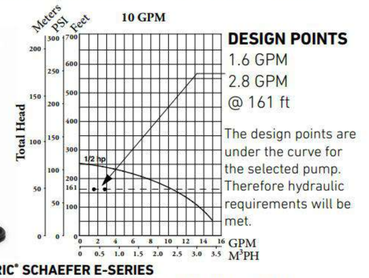

DESIGN POINTS
1.6 GPM
2.8 GPM
@ 161 ft

The design points are under the curve for the selected pump. Therefore hydraulic requirements will be met.

FRANKLIN ELECTRIC® SCHAEFER E-SERIES
High Head Filtered Submersible Effluent Pump **10LE05P4 - 2W115**
115 V, 1/2 HP

1500-GALLON FIBERGLASS TANK		
Liquid depth (in)		**Gallons in tank**
64		1800
63		-
62		-
61		-
60		1765
59		1748
58		1730
57		1709
56		1687
55		1664
54		1640
53		1615
52		1589
51		1561
50	**FULL**	**1532**
49		1502
48		1471
47		1439
46		1407
45		1374
44		1340
43		1305
42		1270
41		1234
40		1198
39		1162
38		1126
37		1089
36		1052
35		1015
34		977
33		939
32		900
31		861
30		823
29		785
28		748
27		711
26		674
25		638
24		602
23		566
22		530
21		495
20		460
19		426
18	**ALARM**	**393**
17		361
16	**ON**	**329**
15		298
14	**OFF**	**268**
13		235
12		211
11		185
10		160
9		136
8		113
7		91
6		70
5		52
4		35
3		-
2		-
1		-
Floor		**0**

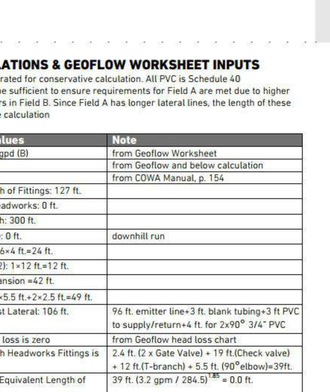

Worksheet - Pump Sizing - DRIP FIELDS A

Section 1 - Summary from Worksheet 1			
Flow required to dose field	0.92	gpm	
Flow required to flush field	2.22	gpm	
Flow required to dose & flush field	3.14	gpm	
Filter	BioDisc Battery 2		
No. of Zones	1	zone	
Drip line	Wasteflow PC - ½ gph		
Drip line longest lateral	40.00	ft.	
Section 2	Ft of head		Pressure
A. Flush line - Losses through return line			
Select Pipe from dropdown menu	PVC schedule 40		
Select Flush Line Diameter	2"	inch	
Length of return line	250	ft.	
Equivalent length of fittings	142	ft.	
Elevation change. (if downhill enter 0)	10	ft.	
Pressure loss in 100 ft of pipe	0.01	ft.	0.01 psi
Total pressure loss from end of drip line to return tank	10.1	ft.	4.35 psi
B. Drip line - Losses through Wasteflow drip line			
Length of longest drip line lateral	106	ft.	
Minimum dosing pressure required at end of drip line	23.10	ft.	10.00 psi
Loss through drip line during flushing	1.13	ft.	0.49 psi
Total minimum required drip line pressure	24.23	ft.	10.49 psi
A+B. Minimum Pressure required at beginning of drip field			
CALCULATED pressure required at beginning of drip field	34.29	ft.	14.84 psi
SPECIFIED pressure at beginning of drip field (from worksheet 1)	46.2	ft.	20.00 psi
Great! SPECIFIED Pressure is greater than CALCULATED Pressure requirement.			
C. Drip components - Losses through headworks			
Filter	11.1	ft.	4.80 psi
Total loss through drip components	11.1	ft.	4.80 psi
D. Supply line - Minimum Pressure head required to get from pump tank to top of drip field			
Pipe type	PVC schedule 40		
Supply line diameter	2"		
Length of supply line	225	ft.	
Equivalent length of fittings	1270	ft.	
Height from pump to tank outlet	5	ft.	
Elevation change	45	ft.	
Pressure loss/gain in 100 ft. of pipe	0.03	ft.	0.01 psi
Total gain or loss from pump to field	50.4	ft.	21.82 psi
Total dynamic head	107.7	ft.	46.62 psi
Pump capacity * - Field Flush Flow	3.1	gpm	46.62 psi
- Field Dose Flow	0.9	gpm	
- Filter Flush Flow	40.0	gpm	40.00 psi
Pump Model Number	FRANKLIN 10LE05P4 - 2W115		
Volts / Hp / phase	115 /1/2 /1		

DATE DRILLED 05/08/2019	LOGGED/CHECKED BY: Igor Kleyner	APPROX. SURFACE ELEVATION (FT) 1935'							
DRILLING METHOD Power Auger/Auger	DRILLED BIT SIZE 2"/3"	TOTAL DEPTH OF BOREHOLE (FT) 5'							
GROUNDWATER LEVEL/DATE MEASURED No groundwater detected	SAMPLING METHOD(S) Disturbed	HAMMER DATA Dynamic Cone Penetration Test							
BOREHOLE BACKFILL Native soil/Cement	LOCATION 20247 Gist Road, Los Gatos, CA.	APN: 544-23-002							

DEPTH (FT)	SAMPLE TYPE	SAMPLING RESISTANCE (BLOWS/FOOT) SPT BQ	RELATIVE HARDNESS/ CONSISTENCY	SOIL/ROCK TYPE	MOISTURE CONTENT %	MATERIAL DESCRIPTION
0						Top soil
1		30	Dense to Very dense	SW-SM	13.27	Brown, well graded, clayey soil with rock material
2						
3		50+				Moderately weathered moderately bedrock
4						
5						Practical refusal on moderately hard sandstone/siltstone bedrock
6						
7						
8						

MTR INC | PROJECT ADDRESS: 20247 Gist Road Los Gatos, CA | LOG OF BORING BH - 9 | PROJECT NO.: 2019-507 | DATE: 2019 May | APPENDIX A

DATE DRILLED 05/08/2019	LOGGED/CHECKED BY: Igor Kleyner	APPROX. SURFACE ELEVATION (FT) 1934'							
DRILLING METHOD Power Auger/Auger	DRILLED BIT SIZE 2"/3"	TOTAL DEPTH OF BOREHOLE (FT) 5'6"							
GROUNDWATER LEVEL/DATE MEASURED No groundwater detected	SAMPLING METHOD(S) Disturbed	HAMMER DATA Dynamic Cone Penetration Test							
BOREHOLE BACKFILL Native soil/Cement	LOCATION 20247 Gist Road, Los Gatos, CA. Flat Area.	APN: 544-23-002							

DEPTH (FT)	SAMPLE TYPE	SAMPLING RESISTANCE (BLOWS/FOOT) SPT BQ	RELATIVE HARDNESS/ CONSISTENCY	SOIL/ROCK TYPE	MOISTURE CONTENT %	MATERIAL DESCRIPTION
0						Top soil
1		16	Medium stiff	SW-SM	15.49	Brown, well graded, silty sandy soil with gravel
2			Medium dense to Dense			
3		28		SW-SC	17.85	Brown, well graded, clayey sand with sandstone/siltstone debris
4		40	Dense to very desne	SW-SM	14.09	Brown, well graded, silty sandy soil with sandstone/siltstone debris
5		50+				Moderately weathered sandstonebedrock with siltstone seams, moderately hard
6						Practical refusal on the moderately to hard sandstone bedrock
7						
8						

MTR INC | PROJECT ADDRESS: 20247 Gist Road Los Gatos, CA | LOG OF BORING BH - 5 | PROJECT NO.: 2019-507 | DATE: 2019 May | APPENDIX A

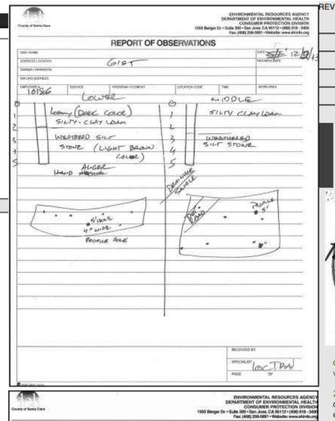

REVISION HISTORY

S3DA Structural & Architectural Design
4196 Adams Ave. San Diego CA 92116
(619) 404-0220

Mr. Nader Moavenian
nader.m@s3da-design.com

REGISTERED PROFESSIONAL ENGINEER — HARRETT C CROOK — C 057196 Exp. 12.31.2021 — CIVIL — STATE OF CALIFORNIA — 2-11-2020

1. The contractor must check all dimensions on-site before commencing work

2. These drawings are to be read in conjunction with all relevant designer, engineer or specialist drawings and specifications

3. The contractor is responsible for providing all necessary temporary support to the building and any adjacent structures

COUNTY APPROVAL STAMP

REVISION DATE
02/11/2020

DRAWING NAME
046 SFR2 Calcs, perc and soil tests.

544-23-042

H2 OWTS-3

APN544-23-041; PROPOSED ADDRESS: 20555 GIST RD, LOS GATOS, CA 95033

DEH service request number SR0865038

GIST RD. SFR 1

APN544-23-041; PROPOSED ADDRESS: 20555 GIST RD, LOS GATOS, CA 95033

REVISION HISTORY

S3DA Structural & Architectural Design
4196 Adams Ave. San Diego CA 92116
(619) 404-0220

Mr. Nader Moavenian
nader.m@s3da-design.com

LICENSED PROFESSIONAL ENGINEER
BARRETT CROCKETT
C 057196
Exp. 12-31-2021
CIVIL
STATE OF CALIFORNIA

2-11-2020

1. The contractor must check all dimensions on-site before commencing work

2. These drawings are to be read in conjunction with all relevant designer, engineer or specialist drawings and specifications

3. The contractor is responsible for providing all necessary temporary support to the building and any adjacent structures

COUNTY APPROVAL STAMP

REVISION DATE
02/11/2020

DRAWING NAME
047 SFR2
General site plan.
544-23-042

Drawing Scale
1:200

H2 OWTS-4

COUNTY OF SANTA CLARA

2022 CALGREEN RESIDENTIAL CHECKLIST (MANDATORY+TIER 1)

County Amendments to CALGreen are in Italics.
- Designer to cross out items that are not applicable to the project.
- Installer or designer shall verify all applicable requirements have been satisfied and sign and date each row. County Inspectors will verify completion signatures and supporting documentation DURING CONSTRUCTION.

ITEM #		CALGreen CODE SECTION	REQUIREMENT	APPLICANT TO COMPLETE Plan Check Review Data: REFERENCE SHEET	Note or Detail No.	Installer or Designer Verification: Date	Installer or Designer Signature
PLANNING AND DESIGN: MANDATORY REQUIRMENTS							
1		4.106.2	A plan is developed and implemented to manage storm water drainage during construction.	CG-3	NOTE 1	1/1/23	Marina Zaviyalova
2		4.106.3	Construction plans indicates how site grading or a drainage system will manage all surface water flows to keep water from entering buildings.	CG-3	NOTE 2	1/1/23	Marina Zaviyalova
3		4.106.4.1	For new dwellings with attached garages and rebuild of existing dwellings that include a panel upgrade or construction between panel and parking area, a Level 2 EV Ready Space and Level 1 EV Ready Space, is installed.	CG-3	NOTES 3 & 4	1/1/23	Marina Zaviyalova
PLANNING AND DESIGN: TIER 1 MANDATORY REQUIREMENTS							
4		A4.106.2.3	Displaced topsoil is stockpiled for reuse in a designated area and covered or protected from erosion.	CG-4	NOTE 7	1/1/23	Marina Zaviyalova
5		A4.106.4	Not less than 20 percent of the total parking, walking or patio surfaces are permeable.	CG-4	NOTE 9	1/1/23	Marina Zaviyalova
PLANNING AND DESIGN: TIER 1 ELECTIVE REQUIREMENTS							
Comply with at least two Tier 1 elective measures - Cross out the rows not applicable	6	~~A4.103.1~~	Building site is an infill site, greyfield site or EPA-recognized and Brownfield site.	CG-4	NOTE 1	1/1/23	Marina Zaviyalova
	7	~~A4.103.2~~	Community connectivity is facilitated by one of the approved methods.	CG-4	NOTE 2	1/1/23	Marina Zaviyalova
	8	~~A4.104.1~~	An individual with oversight responsibility for the project has participated in an educational program promoting environmentally friendly design or development and has provided instruction to appropriate entities.	CG-4	NOTE 3	1/1/23	Marina Zaviyalova
	9	A4.105.2	Existing buildings are disassembled for reuse or recycling of building materials. The proposed structure utilizes at least one of the listed materials.	CG-4	NOTE 4	1/1/23	Marina Zaviyalova
	10	A4.106.2.1	Soil analysis is performed by a licensed design professional and the findings are utilized in the structural design of the building.	CG-4	NOTE 5	1/1/23	Marina Zaviyalova
	11	A4.106.2.2	Soil disturbance and erosion are minimized by using one or more of the methods listed.	CG-4	NOTE 6	1/1/23	Marina Zaviyalova
	12	A4.106.3	Landscape areas disrupted during construction are restored to be consistent with native vegetation and/or at least 75% native California or drought tolerant plant and tree are utilized.	CG-4	NOTE 8	1/1/23	Marina Zaviyalova
	13	~~A4.106.6~~	A vegetated roof for at least 50% of the roof area is installed. Vegetated roof complies with CBC chapters 15 and 16.	CG-4	NOTE 10	1/1/23	Marina Zaviyalova
	14	A4.106.7	Nonroof heat islands are reduced for 50% of sidewalks, patios, driveways, or other paved areas by using one or more of the methods listed.	CG-4	NOTE 11	1/1/23	Marina Zaviyalova
ENERGY EFFICIENCY: MANDATORY REQUIRMENTS							
15		4.201.1	Building meets or exceeds the requirements of the California Building Energy Efficiency Standards.	T24 SHEETS		1/1/23	Marina Zaviyalova
WATER EFFICIENCY & CONSERVATION: MANDATORY REQUIRMENTS							
16		4.303.1	Plumbing Fixtures (water closets and urinals) and fittings (faucets and showerheads) installed in residential buildings comply with CALGreen Sections 4.303.1.1 through 4.303.1.4.	CG-3	NOTE 5	1/1/23	Marina Zaviyalova
17		4.303.3	Plumbing fixtures and fittings required in CALGreen Section 4.303.1 are installed in accordance with the CPC and meet the applicable referenced standards.	CG-3	NOTE 6	1/1/23	Marina Zaviyalova
18		4.304.1	Outdoor potable water use in landscape areas comply with a local water efficient landscape or the current California DWR MWELO, whichever is more stringent.	CG-3	NOTE 7	1/1/23	Marina Zaviyalova

ITEM #		CALGreen CODE SECTION	REQUIREMENT	APPLICANT TO COMPLETE Plan Check Review Data: REFERENCE SHEET	Note or Detail No.	Installer or Designer Verification: Date	Installer or Designer Signature
WATER EFFICIENCY & CONSERVATION : TIER 1 ELECTIVE REQUIREMENTS							
Comply with at least two Tier 1 elective measures - Cross out the rows not applicable	19	A4.303.1	Kitchen faucet maximum flow rate does not exceed 1.5 gpm at 60 psi. See exceptions.	CG-4	NOTE 14	1/1/23	Marina Zaviyalova
	20	~~A4.303.2~~	Alternate nonpotable water resources are used for indoor potable water reduction and are installed in accordance with CPC.	CG-4	NOTE 15	1/1/23	Marina Zaviyalova
	21	A4.303.3	At least one qualified ENERGY STAR dishwasher or clothes washer is installed.	CG-4	NOTE 16	1/1/23	Marina Zaviyalova
	22	~~A4.303.4~~	Nonwater urinals or composting toilets are installed.	CG-4	NOTE 17	1/1/23	Marina Zaviyalova
	23	~~A4.303.5~~	Dwelling is equipped with a demand hot water recirculation system. The system is installed per CPC, CEnC, and the manufacturer's installation instructions.	CG-4	NOTE 18	1/1/23	Marina Zaviyalova
	24	~~A4.304.1~~	An approved rainwater catchment system is designed and installed to use rainwater generated by at least 65% of the available roof area. The system is installed per CPC.	CG-4	NOTE 19	1/1/23	Marina Zaviyalova
	25	A4.304.2	A water efficient landscape irrigation design that eliminates the use of potable water, is provided. Method used to accomplish the requirements comply with California Building Standards Code and one or more of listed methods.	CG-4	NOTE 20	1/1/23	Marina Zaviyalova
	26	~~A4.304.3~~	Separate submeters or metering devices for outdoor potable water use is provided for landscape areas less than 5000 sq.ft.	CG-4	NOTE 21	1/1/23	Marina Zaviyalova
	27	A4.305.1	Alternative plumbing piping is installed to permit the discharge from the clothes washer or other fixtures to be used for an irrigation system in compliance with CPC.	CG-4	NOTE 22	1/1/23	Marina Zaviyalova
	28	~~A4.305.2~~	Dual water piping is installed for future use of recycled water at tlisted locations.	CG-4	NOTE 23	1/1/23	Marina Zaviyalova
	29	A4.305.3	Recycled water is used for landscape irrigation.	CG-4	Note 24	1/1/23	Marina Zaviyalova
MATERIAL CONSERVATION & RESOURCE EFFICIENCY: MANDATORY REQUIREMENTS							
	30	4.406.1	Annular spaces around pipes, electric cables, conduits or other openings in plates at exterior walls are protected against the passage of rodents by closing such openings with cement mortar, concrete masonry or similar method acceptable to the County of Santa Clara.	CG-3	Note 9	1/1/23	Marina Zaviyalova
	31	4.408.1	Recycle and/or salvage for reuse a minimum of 65 percent of the nonhazardous construction and demolition waste. Submit either a Construction Waste management plan (CALGreen 4.408.2) or Utilize a waste management company (CALGreen 4.408.3).	CG-3	Note 10	1/1/23	Marina Zaviyalova
	32	4.408.5	Documentation is provided to County of Santa Clara which demonstrates compliance with CALGreen sections 4.408.2 or 4.408.3.	CG-2 CG-3	Construction Waste Management Forms Note 11	1/1/23	Marina Zaviyalova
	33	4.410.1	An operation and maintenance manual is placed in the building at the time of final inspection.	CG-3	Note 12	1/1/23	Marina Zaviyalova
MATERIAL CONSERVATION & RESOURCE EFFICIENCY: TIER 1 MANDATORY REQUIREMENTS							
	34	A4.403.2	Reduction in cement use in foundation mix design is not less than 20 percent.	CG-4	Note 26	1/1/23	Marina Zaviyalova
	35	A4.405.3.1	Use materials with a total RCV (recycled content value) not less than a 10 percent of the total material cost of the project except structural framing material.	CG-4	Note 33	1/1/23	Marina Zaviyalova
	36	A4.408.1	Reduce construction waste by at least 65%. Documentation is submitted to the County of Santa Clara demonstrating compliance.	CG-2 CG-3	Construction Waste Management Forms Note 41	1/1/23	Marina Zaviyalova
MATERIAL CONSERVATION & RESOURCE EFFICIENCY: TIER 1 ELECTIVE REQUIREMENTS							
Comply with at least two Tier 1 elective measures - Cross out the rows not applicable	37	A4.403.1	A Frost-Protected Shallow Foundation (FPSF) is utilized in compliance with CRC. The required manual includes instructions to the owner or occupant regarding the necessity for heating the structure per CRC R403.3.	CG-4	NOTE 25	1/1/23	Marina Zaviyalova
	38	A4.404.1	Beams, headers and trimmers are sized and installed as specified in Chapter 23 of CBC or Chapter 6 of CRC.	CG-4	NOTE 27	1/1/23	Marina Zaviyalova
	39	A4.404.2	Building dimensions and layouts are designed to minimize waste by one or more of the listed measures in at least 80% of the structure.	CG-4	NOTE 28	1/1/23	Marina Zaviyalova
	40	A4.404.3	Premanufactured building system, as listed, is used to eliminate solid sawn lumber.	CG-4	NOTE 29	1/1/23	Marina Zaviyalova
	41	A4.404.4	Material lists are included in the plans which specify the material quantity and direction for on-site cuts, for the listed systems.	CG-4	NOTE 30	1/1/23	Marina Zaviyalova
	42	A4.405.1	Prefinished building materials are utilized which do not require additional painting or staining. Acceptable material list is per CALGreen A4.405.1.	CG-4	NOTE 31	1/1/23	Marina Zaviyalova
	43	~~A4.405.2~~	Concrete floors that do not require additional coverings are used.	CG-4	NOTE 32	1/1/23	Marina Zaviyalova
	44	~~A4.405.4~~	One or more of the listed materials from rapidly renewable sources or agricultural byproducts are used.	CG-4	NOTE 34	1/1/23	Marina Zaviyalova
	45	A4.407.1	Foundation and landscape drains with discharge to an approved on-site location is installed.	CG-4	NOTE 35	1/1/23	Marina Zaviyalova
	46	A4.407.2	Roof gutter and downspout system is installed to route water at least 5 feet away from the foundation or connect to landscape drains with approved on-site discharge.	CG-4	NOTE 36	1/1/23	Marina Zaviyalova
	47	A4.407.3	Flashing details complying with accepted industry standards or manufacturer's instructions are provided on the plans.	CG-4	NOTE 37	1/1/23	Marina Zaviyalova
	48	A4.407.4	Building materials delivered to the construction site are protected from rain and other sources of moisture.	CG-4	NOTE 38	1/1/23	Marina Zaviyalova
	49	A4.407.6	Exterior doors are covered to prevent water intrusion by one or more listed methods.	CG-4	NOTE 39	1/1/23	Marina Zaviyalova
	50	~~A4.407.7~~	A permanent overhang or awning at least two feet in depth is provided at all exterior walls.	CG-4	Note 40	1/1/23	Marina Zaviyalova

ITEM #		CALGreen CODE SECTION	REQUIREMENT	APPLICANT TO COMPLETE Plan Check Review Data: REFERENCE SHEET	Note or Detail No.	Installer or Designer Verification: Date	Installer or Designer Signature
ENVIRONMENTAL QUALITY: MANDATORY REQUIREMENTS							
51		4.503.1	Any installed gas fireplace is a direct-vent sealed-combustion type. Any installed woodstove or pellet stove comply with US EPA Phase II emission limits where applicable.	CG-3	Note 13	1/1/23	Marina Zaviyalova
52		4.504.1	Duct openings and other related air distribution component openings are covered during construction until final startup of the HVAC equipment.	CG-3	Note 14	1/1/23	Marina Zaviyalova
53		4.504.2.1	Adhesives, sealants and caulks are compliant with VOC and other toxic compound limits.	CG-2 CG-2	Table 4.504.1 Table 4.504.2 Note 15	1/1/23	Marina Zaviyalova
54		4.504.2.2	Architectural paints and coatings are compliant with VOC limits.	CG-2 CG-3	Table 4.504.3 Note 16	1/1/23	Marina Zaviyalova
55		4.504.2.3	Aerosol paints and coatings are compliant with product weighted MIR limits for ROC and other toxic compounds.	CG-3	Note 17	1/1/23	Marina Zaviyalova
56		4.504.2.4	Documentation are provided to the County of Santa Clara to verify that compliant VOC limit finish materials have been used.	CG-3	Note 18	1/1/23	Marina Zaviyalova
57		4.504.3	Carpet and carpet systems meet the applicable testing and product requirements.	CG-2 CG-3	Table 4.504.1 Note 19	1/1/23	Marina Zaviyalova
58		4.504.5	Hardwood plywood, particleboard and medium density fiberboard composite wood meet formaldehyde limits.	CG-1 CG-3	Table 4.504.5 Note 21	1/1/23	Marina Zaviyalova
59		4.504.5.1	Documentation is provided to the County of Santa Clara to verify composite wood meets applicable formaldehyde limits.	CG-3	Note 22	1/1/23	Marina Zaviyalova
60		4.505.2	Vapor retarder and capillary break is installed at slab-on-grade foundations.	CG-3	Note 23	1/1/23	Marina Zaviyalova
61		4.505.3	Moisture content of building materials used in wall and floor framing do not exceed 19% prior to enclosure and is checked before enclosure. Insulation products are dry prior to enclosure.	CG-3	Note 24	1/1/23	Marina Zaviyalova
62		4.506.1	Each bathroom is mechanically ventilated and comply with applicable requirements.	CG-3	Note 25	1/1/23	Marina Zaviyalova
63		4.507.2	Heating and air-conditioning systems are sized, designed, and equipment is selected by using one of the methods listed.	CG-3	Note 26	1/1/23	Marina Zaviyalova
ENVIROMENTAL QUALITY: TIER 1 MANDATORY REQUIREMENTS							
64		A4.504.2	At least 90% of resilient flooring complies with applicable VOC limits.	CG-4	Note 43	1/1/23	Marina Zaviyalova
65		A4.504.3	Thermal insulation in the building is installed in compliance with applicable standards.	CG-4	Note 44	1/1/23	Marina Zaviyalova
ENVIROMENTAL QUALITY: TIER 1 ELECTIVE REQUIREMENTS							
Comply with at least one Tier 1 elective measures - Cross out the rows not applicable	66	~~A4.504.1~~	Composite wood products made with NAF or ULEF resins are used.	CG-4	Note 42	1/1/23	Marina Zaviyalova
	67	~~A4.504.2~~	Filters at MERV 8 or higher are used on return air openings, during construction.	CG-4	Note 45	1/1/23	Marina Zaviyalova
	68	A4.506.3	Direct vent heating and cooling equipment are utilized where the equipment will be located in the conditioned space or the space heating and water heating equipment is installed in an isolated mechanical room.	CG-4	Note 46	1/1/23	Marina Zaviyalova
INSTALLER AND SPECIAL INSPECTOR QUALIFICATIONS: MANDATORY REQUIREMENTS							
69		702.1	HVAC system installers are trained and certified in the proper installation of HVAC systems.	CG-3	Note 27	1/1/23	Marina Zaviyalova
70		702.2	If required by County of Santa Clara, owner or owner's agent shall employ special inspector who are qualified and able to demonstrate competence in the discipline they are inspecting.	CG-3	Note 28	1/1/23	Marina Zaviyalova
71		703.1	Documentation used to show compliance with this code may include construction documents, plans, specifications, builder or installer certification, inspection reports, or other methods acceptable to County of Santa Clara which show substantial conformance.	CG-3	Note 29	1/1/23	Marina Zaviyalova

TABLE 4.504.5
FORMALDEHYDE LIMITS [1]
Maximum Formaldehyde Emissions in Parts per Million

PRODUCT	CURRENT LIMIT
Hardwood plywood veneer core	0.05
Hardwood plywood composite core	0.05
Particleboard	0.09
Medium density fiberboard	0.11
Thin medium density fiberboard[2]	0.13

1. Values in this table arederived from those specifiedby the California Air Resources Board, Air Toxics Control Measure for Composite Wood as tested in accordance with ASTM E1333. For additional information, see *California Code of Regulations*, Title 17, Sections 93120 through 93120.12.
2. Thin medium density fiberboard has a maximum thickness of ⅛ inch (8 mm).

TABLE A4.106.10
MAXIMUM ALLOWABLE BACKLIGHT, UPLIGHT AND GLARE (BUG) RATINGS [1,2]

ALLOWABLE RATING	LIGHTING ZONE 1	LIGHTING ZONE 2	LIGHTING ZONE 3	LIGHTING ZONE 4
Maximum Allowable Backlight Rating [3]				
Luminaire greater than 2 mounting heights (MH) from property line	No Limit	No Limit	No Limit	No Limit
Luminaire back hemisphere is 1 – 2 MH from property line	B2	B3	B4	B4
Luminaire back hemisphere is 0.5 – 1 MH from property line	B1	B2	B3	B3
Luminaire back hemisphere is less than 0.5 MH from property line	B0	B0	B1	B2
Maximum Allowable Uplight Rating				
For area lighting[4]	U0	U0	U0	U0
For all other outdoor lighting, including decorative luminaires	U1	U2	U3	U4
Maximum Allowable Glare Rating [5]				
Luminaire greater than 2 MH from property line	G1	G2	G3	G4
Luminaire front hemisphere is 1 – 2 MH from property line	G0	G1	G1	G2
Luminaire front hemisphere is 0.5 – 1 MH from property line	G0	G0	G1	G1
Luminaire back hemisphere is less than 0.5 MH from property line	G0	G0	G0	G1

1. IESNA Lighting Zones 0 and 5 are not applicable; refer to Lighting Zones as defined in the *California Energy Code* and Chapter 10 of the *California Administrative Code*.
2. For property lines that abut public walkways, bikeways, plazas and parking lots, the property line may be considered to be 5 feet beyond the actual property line for purpose of determining compliance with this section. For property lines that abut public roadways and public transit corridors, the property line may be considered to be the centerline of the public roadway or public transit corridor for the purpose of determining compliance with this section.
3. If the nearest property lines less than or equal to two mounting heights from the back hemisphere of the luminaire distribution, the applicable reduced Backlight rating shall be met.
4. General lighting luminaires in areas such as outdoor parking, sales or storage lots shall meet these reduced ratings. Decorative luminaires located in these areas shall meet Lv-value limits for "all other outdoor lighting."
5. If the nearest property line is less than or equal to two mounting heights from the front hemisphere of the luminaire distribution, the applicable reduced Glare rating shall be met.

CALGreen One or Two Family Residential Project Mandatory and Tier 1 Requirements

County of Santa Clara

GIST RD. SFR 1

APN544-23-041; PROPOSED ADDRESS: 20555 GIST RD, LOS GATOS, CA 95033

REVISION HISTORY

S3DA Structural & Architectural Design
4196 Adams Ave. San Diego CA 92116
(619) 404-0220

Mr. Nader Moavenian
nader.m@s3da-design.com

STAMP

1. The contractor must check all dimensions on-site before commencing work
2. These drawings are to be read in conjunction with all relevant designer, engineer or specialist drawings and specifications
3. The contractor is responsible for providing all necessary temporary support to the building and any adjacent structures

COUNTY APPROVAL STAMP

REVISION DATE
01/02/2021

DRAWING NAME
CALGreen 1

Drawing Scale

CG-1

TABLE 4.504.1
ADHESIVE VOC LIMIT [1,2]
Less Water and Less Exempt Compounds in Grams per Liter

ARCHITECTURAL APPLICATIONS	VOC LIMIT
Indoor carpet adhesives	50
Carpet pad adhesives	50
Outdoor carpet adhesives	150
Wood flooring adhesive	100
Rubber floor adhesives	60
Subfloor adhesives	50
Ceramic tile adhesives	65
VCT and asphalt tile adhesives	50
Drywall and panel adhesives	50
Cove base adhesives	50
Multipurpose construction adhesives	70
Structural glazing adhesives	100
Single-ply roof membrane adhesives	250
Other adhesives not specifically listed	50
SPECIALTY APPLICATIONS	
PVC welding	510
CPVC welding	490
ABS welding	325
Plastic cement welding	250
Adhesive primer for plastic	550
Contact adhesive	80
Special purpose contact adhesive	250
Structural wood member adhesive	140
Top and trim adhesive	250
SUBSTRATE SPECIFIC APPLICATIONS	
Metal to metal	30
Plastic foams	50
Porous material (except wood)	50
Wood	30
Fiberglass	80

1. If an adhesive is used to bond dissimilar substrates together, the adhesive with the highest VOC content shall be allowed.
2. For additional information regarding methods to measure the VOC content specified in this table, see South Coast Air Quality Management District Rule 1168.

TABLE 4.504.2
SEALANT VOC LIMIT
Less Water and Less Exempt Compounds in Grams per Liter

SEALANTS	VOC LIMIT
Architectural 250	
Marine deck	760
Nonmembrane roof	300
Roadway	250
Single-ply roof membrane	450
Other	420
SEALANT PRIMERS	
Architectural Nonporous Porous	 250 775
Modified bituminous	500
Marine deck	760
Other	750

TABLE 4.504.3
VOC CONTENT LIMITS FOR ARCHITECTURAL COATINGS [2,3]
Grams of VOC per Liter of Coating,
Less Water and Less Exempt Compounds

COATING CATEGORY	VOC LIMIT
Flat coatings	50
Nonflat coatings	100
Nonflat-high gloss coatings	150
SPECIALTY COATINGS	
Aluminum roof coatings	400
Basement specialty coatings	400
Bituminous roof coatings	50
Bituminous roof primers	350
Bond breakers	350
Concrete curing compounds	350
Concrete/masonry sealers	100
Driveway sealers	50
Dry fog coatings	150
Faux finishing coatings	350
Fire resistive coatings	350
Floor coatings	100
Form-release compounds	250
Graphic arts coatings (sign paints)	500
High temperature coatings	420
Industrial maintenance coatings	250
Low solids coatings	120
Magnesite cement coatings	450
Mastic texture coatings	100
Metallic pigmented coatings	500
Multicolor coatings	250
Pretreatment wash primers	420
Primers, sealers, and undercoaters	100
Reactive penetrating sealers	350
Recycled coatings	250
Roof coatings	50
Rust preventative coatings	250
Shellacs Clear Opaque	 730 550
Specialty primers, sealers and undercoaters	100
Stains	250
Stone consolidants	450
Swimming pool coatings	340
Traffic marking coatings	100
Tub and tile refinish coatings	420
Waterproofing membranes	250
Wood coatings	275
Wood preservatives	350
Zinc-rich primers	340

1. Grams of VOC per liter of coating, including water and including exempt compounds.
2. The specified limits remain in effect unless revised limits are listed in subsequent columns in the table.
3. Values in this table are derived from those specified by the California Air Resources Board, Architectural Coatings Suggested Control Measure, February 1, 2008. More information is available from the Air Resources Board.

Construction Waste Management (CWM) Plan

Fill out the form including diversion rate and facility names and addresses

Project Name: ____________________
Job #: ____________________
Project Manager: ____________________
Waste Hauling Company: ____________________
Contact Name: ____________________

Legend:
Hauling Company
Sorting Facility Name and Location
Disposal Service Company

All Subcontractors shall comply with the project's Construction Waste Management Plan.
All Subcontractor foremen shall sign the CWM Plan Acknowledgment Sheet.

Subcontractors who fail to comply with the Waste Management Plan will be subject to backcharges or withholding of payment, as deemed appropriate. For instance, Subcontractors who contaminate debris boxes that have been designated for a single material type will be subject to backcharge or withheld payment, as deemed appropriate.

1. The project's overall rate of waste diversion will be ____ %.
2. This project shall generate the least amount of waste possible by planning and ordering carefully, following all proper storage and handling procedures to reduce broken and damaged materials and reusing materials whenever possible. The majority of the waste that is generated on this jobsite will be diverted from the landfill and recycled for other use.
3. Spreadsheet 1, enclosed, identifies the waste materials that will be generated on this project, the diversion strategy for each waste type and the anticipated diversion rate.
4. Waste prevention and recycling activities will be discussed at the beginning of weekly subcontractor meetings. As each new subcontractor comes on-site, the WMP Coordinator will present him/her with a copy of the CWM Plan and provide a tour of the jobsite to identify materials to be salvaged and the procedures for handling jobsite debris. All Subcontractor foremen will acknowledge in writing that they have read and will abide by the CWM Plan. Subcontractor Acknowledgment Sheet enclosed. The CWM Plan will be posted at the jobsite trailer.
5. Salvage: Excess materials that cannot be used in the project, nor returned to the vendor, will be offered to site workers, the owner, or donated to charity if feasible.
6. ____________________ will provide a commingled drop box at the jobsite for most of the construction waste. These commingled drop boxes will be taken to ____________________. The average diversion rate for commingled waste will be ____%. As site conditions permit, additional drop boxes will be used for particular phases of construction (e.g., concrete and wood waste) to ensure the highest waste diversion rate possible.
7. In the event that the waste diversion rate achievable via the strategy described in (6) above, is projected to be lower than what is required, then a strategy of source-separated waste diversion and/or waste stream reduction will be implemented. Source separated waste refers to jobsite waste that is not commingled but is instead allocated to a debris box designated for a single material type, such as clean wood or metal.

   Notes:
   1. Waste stream reduction refers to efforts taken by the builder to reduce the amount of waste generated by the project to below four (4) pounds per square foot of building area.
   2. When using wastestream reduction measures the gross weight of the product is subtracted from a base weight of four (4) pounds per square foot of building area. This reduction is considered additional diversion and can be used in the waste reduction percentage calculations.
8. ____________________ will track and calculate the quantity (in tons) of all waste leaving the project and calculate the waste diversion rate for the project. ____________________ will provide Project Manager with an updated monthly report on gross weight hauled and the waste diversion rate being achieved on the project. ____________________ monthly report will track separately the gross weights and diversion rates for commingled debris and for each source-separated waste stream leaving the project. In the event that ____________________ does not service any or all of the debris boxes on the project, the ____________________ will work with the responsible parties to track the material type and weight (in tons) in such debris boxes in order to determine waste diversion rates for these materials.
9. In the event that Subcontractors furnish their own debris boxes as part of their scope of work, such Subcontractors shall not be excluded from complying with the CWM Plan and will provide ____________________ weight and waste diversion data for their debris boxes.
10. In the event that site use constraints (such as limited space) restrict the number of debris boxes that can be used for collection of designated waste the project Superintendent will, as deemed appropriate, allocate specific areas onsite where individual material types are to be consolidated. These collection points are not to be contaminated with non-designated waste types.
11. Debris from jobsite office and meeting rooms will be collected by ____________________ . ____________________ ____________________ will, at a minimum, recycle office paper, plastic, metal and cardboard.

Construction Waste Management (CWM) Worksheet

Project Name: ____________________

Job Number: ____________________

Project Manager: ____________________

Waste Hauling Company: ____________________

Construction Waste Management (CWM) Plan

WASTE MATERIAL TYPE	DIVERSION METHOD: COMMINGLED AND SORTED OFF SITE	DIVERSION METHOD: SOURCE SEPARATED ON SITE	PROJECTED DIVERSION RATE
Asphalt			
Concrete			
Shotcrete			
Metals			
Wood			
Rigid insulation			
Fiberglass insulation			
Acoustic ceiling tile			
Gypsum drywall			
Carpet/carpet pad			
Plastic pipe			
Plastic buckets			
Plastic			
Hardiplank siding and boards			
Glass			
Cardboard			
Pallets			
Job office trash, paper, glass & plastic bottles, cans, plastic			
Alkaline and rechargeable batteries, toner cartridges, and electronic devices			
Other:			
Other:			
Other:			
Other:			

Construction Waste Management (CWM) Acknowledgment

Note: This sample form may be used to assist in documenting compliance with the waste management plan.

Project Name: ____________________

Job Number: ____________________

Project Manager: ____________________

Waste Hauling Company: ____________________

CWM Plan Acknowledgment

The Foreman for each new Subcontractor that comes on site is to receive a copy of the Construction Waste Management Plan and complete this Acknowledgment Form.

I have read the Waste Management Plan for the project; I understand the goals of this plan and agree to follow the procedures described in this plan.

DATE	SUBCONTRACTOR COMPANY NAME	FOREMAN NAME	SIGNATURE

Table 1 - Recycled Content Value Calculations

A	B	C	D	E	F	G	H
Material/Assembly*	Manufacturer	Recycled Content Information Source	Material/ Assembly Cost ($)	Post-Consumer Recycled Content (%)	Pre-Consumer Recycled Content (%)	Recycled Content (%)	Recycled Content Value ($)
Total Recycled Content Value ($):							
For calculating the total material cost, choose ONLY ONE of the three options below:							
1. Size of project (sf):		Cost per sf:		x 45% = Total Material Cost ($):			
2. Estimated project cost/valuation ($):				x 45% = Total Material Cost ($):			
3. Sum of estimated and/or actual cost of materials used in the project				= Total Material Cost ($):			
Total Recycled Content Value as a percentage of the Total Material Cost:							

* Materials used as components of the structural frame shall not be used to calculate recycled content. The structural frame includes the load bearing structural elements, such as wall studs, plates, sills, columns, beams, girders, joists, rafters, and trusses.

The sum of post-consumer and pre-consumer recycled contents of each material cannot exceed 100%.

Table 2 - Assembly Product Recycled Content Calculations*

ASSEMBLY PRODUCT:

A	B	C	D	E	F	G	H	I
Assembly Product**	Material Weight (lb)	Material Weight (%)	Post-Consumer Recycled Content(lb)	Post-Consumer Recycled Content (%)	Pre-Consumer Recycled Content(lb)	Pre-Consumer Recycled Content (%)	Proportional Post-Consumer Content (%)	Proportional Pre-Consumer Content (%)
Total Weight:								
Assembly Post-Consumer Recycled Content:								
Assembly Pre-Consumer Recycled Content:								

* Use one sheet per assembly product.

** Materials used as components of the structural frame shall not be used to calculate recycled content. The structural frame includes the load bearing structural elements, such as wall studs, plates, sills, columns, beams, girders, joists, rafters, and trusses.

The sum of post-consumer and pre-consumer recycled contents of each material in the assembly product cannot exceed 100%.

RECYCLED CONTENT - DECLARATION STATEMENT

Project Name:	Aurum House
Project Location:	APN 544-23-041 Gist Rd, Los Gatos, CA 95033; Proposed address: 20555 Gist Rd, Los Gatos, CA 95033
Project Manager:	Marina Zaviyalova
Project Owner:	Marina Zaviyalova

The following section shall be completed by a person with overall responsibility for the planning and design portion of the project.

DECLARATION STATEMENT:

- I certify under penalty of perjury, under the laws of the State of California, the information provided is true and correct.
- I certify that the materials, components, assembly products or manufactured devices identified on this certificate conform to all applicable codes and regulations, and the installation is consistent with the plans and specifications approved by the enforcing agency.

Responsible Person's Name: Marina Zaviyalova	Responsible Person's Signature:
Date Signed: 1/1/2023	Position/Title: Marina Zaviyalova
Notes:	Attachments:

Table 3 - Recycled Content Conversion Table (Pounds to %) *

A	B	C	D	E	F
Type of Material	Material Weight (lb)	Post-Consumer Recycled Content(lb)	Post-Consumer Recycled Content (%)	Pre-Consumer Recycled Content(lb)	Pre-Consumer Recycled Content (%)

* When the Post-Consumer and Pre-Consumer Recycled Content of any material are provided in pounds, Table 3 may be used for calculating the percentages of the recycled contents in each material. Table 3 shall not be used for assembly calculations.

Step 1 - Insert the type of material into Column A.

Step 2 - Insert the weight of material (provided by the manufacturer or other source) into Column B.

Step 3 - Insert the weight of Post-Consumer Recycled Content (provided by the manufacturer or other source) into Column C.

Step 4 - Insert the weight of Pre-Consumer Recycled Content (provided by the manufacturer or other source) into Column E.

Step 5 - Divide the values in Column C by the values in Column B; insert the Post-Consumer Recycled Content of each material in percentages into Column D.

Step 6 - Divide the values in Column E by the values in Column B; insert the Pre-Consumer Recycled Content of each material in percentages into Column F.

Step 7 - Transfer the percentages of Post-Consumer and Pre-Consumer Recycled Content from Column D and Column F to Table 1, Columns E and F.

CALGreen One or Two Family Residential Project Mandatory and Tier 1 Requirements

County of Santa Clara

GIST RD. SFR 1
APN544-23-041; PROPOSED ADDRESS: 20555
GIST RD, LOS GATOS, CA 95033

REVISION HISTORY

S3DA Structural & Architectural Design
4196 Adams Ave. San Diego CA 92116
(619) 404-0220

Mr. Nader Moavenian
nader.m@s3da-design.com

STAMP

1. The contractor must check all dimensions on-site before commencing work
2. These drawings are to be read in conjunction with all relevant designer, engineer or specialist drawings and specifications
3. The contractor is responsible for providing all necessary temporary support to the building and any adjacent structures

COUNTY APPROVAL STAMP

REVISION DATE
01/02/2021

DRAWING NAME
CALGreen 2

Drawing Scale

CG-2

CALGREEN 2022 NOTES – MANDATORY REQUIREMENTS:

1. PROJECTS WHICH DISTURB LESS THAN ONE ACRE OF SOIL AND ARE NOT PART OF A LARGER COMMON PLAN OF DEVELOPMENT WHICH IN TOTAL DISTURBS ONE ACRE OR MORE, SHALL MANAGE STORM WATER DRAINAGE DURING CONSTRUCTION. SEE CALGREEN 4.106.2 FOR FURTHER DETAILS.

2. CONSTRUCTION PLANS SHALL INDICATE HOW THE SITE GRADING OR DRAINAGE SYSTEM WILL MANAGE ALL SURFACE WATER FLOWS TO KEEP WATER FROM ENTERING BUILDINGS. SWALES, WATER COLLECTION AND DISPOSAL SYSTEMS, FRENCH DRAINS, WATER RETENTION GARDENS, AND OTHER MEASURES CAN BE USED. EXCEPTION: ADDITIONS AND ALTERATIONS NOT ALTERING THE DRAINAGE PATH.

3. FOR ANY NEW DWELLING UNITS WITH ATTACHED GARAGES AND FOR REBUILDS OF EXISTING DWELLING UNITS THAT INCLUDE A PANEL UPGRADE OR CONSTRUCTION BETWEEN THE PANEL AND PARKING AREA, INSTALL A LEVEL 2 EV READY SPACE AND LEVEL 1 EV READY SPACE. THE RACEWAY TERMINATION LOCATION SHALL BE PERMANENTLY AND VISIBLY MARKED AS "LEVEL 2 EV-READY."

EXCEPTION: FOR EACH DWELLING UNIT WITH ONLY ONE PARKING SPACE, INSTALL A LEVEL 2 EV READY SPACE.

LEVEL 1 EV READY SPACE IS A PARKING SPACE SERVED BY A COMPLETE ELECTRIC CIRCUIT WITH A MINIMUM OF 110/120 VOLT, 20-AMPERE CAPACITY, INCLUDING ELECTRICAL PANEL CAPACITY; AN OVERPROTECTION DEVICE; A MINIMUM 1" DIAMETER RACEWAY THAT MAY INCLUDE MULTIPLE CIRCUITS AS ALLOWED BY THE COUNTY ELECTRICAL CODE; PROPERLY SIZED CONDUCTORS; GROUNDING AND BONDING; AND EITHER (A) A RECEPTACLE LABELLED "ELECTRIC VEHICLE OUTLET" WITH AT LEAST A ½" FONT ADJACENT TO THE PARKING SPACE, OR (B) LABELED ELECTRIC VEHICLE SUPPLY EQUIPMENT (EVSE).

LEVEL 2 EV READY SPACE IS A PARKING SPACE SERVED BY A COMPLETE ELECTRIC CIRCUIT WITH A MINIMUM OF 208/240 VOLT, 40-AMPERE CAPACITY, INCLUDING THE REQUIRED ELECTRICAL PANEL CAPACITY; AN OVERCURRENT PROTECTION DEVICE; A MINIMUM 1" DIAMETER RACEWAY THAT MAY INCLUDE MULTIPLE CIRCUITS AS ALLOWED BY THE COUNTY ELECTRICAL CODE; PROPERLY SIZED CONDUCTORS; GROUNDING AND BONDING; AND EITHER (A) A RECEPTACLE LABELED "ELECTRIC VEHICLE OUTLET" WITH A MINIMUM ½" FONT, ADJACENT TO THE PARKING SPACE, OR (B) A BLANK LABELED ELECTRIC VEHICLE SUPPLY EQUIPMENT (EVSE) WITH A MINIMUM OUTPUT OF 40 AMPERES.

4. ACCESSORY DWELLING UNITS (ADU) AND JUNIOR ACCESSORY DWELLING UNITS (JADU) WITHOUT ADDITIONAL PARKING SPACES AND WITHOUT ELECTRICAL PANEL UPGRADE OR NEW PANEL INSTALLATION ARE EXEMPT FROM REQUIREMENTS ON NOTE 3. ADUS AND JADUS WITHOUT ADDITIONAL PARKING BUT WITH ELECTRICAL PANEL UPGRADES OR NEW PANELS MUST HAVE RESERVED BREAKERS AND ELECTRICAL CAPACITY ACCORDING TO THE REQUIREMENTS OF NOTE 3.

5. ALL NONCOMPLIANT PLUMBING FIXTURES SHALL BE REPLACED WITH WATER-CONSERVING PLUMBING FIXTURES. PLUMBING FIXTURE REPLACEMENT IS REQUIRED PRIOR TO ISSUANCE OF A CERTIFICATE OF FINAL COMPLETION, CERTIFICATE OF OCCUPANCY, OR FINAL PERMIT APPROVAL BY BUILDING AND INSPECTION DIVISION. SEE CIVIL CODE SECTION 1101.1, ET SEQ., FOR THE DEFINITION OF A NONCOMPLIANT PLUMBING FIXTURE, TYPES OF RESIDENTIAL BUILDINGS AFFECTED AND OTHER IMPORTANT ENACTMENT DATES.

A. THE EFFECTIVE FLUSH VOLUME OF ALL WATER CLOSETS SHALL NOT EXCEED 1.28 GALLONS PER FLUSH. TANK-TYPE WATER CLOSETS SHALL BE CERTIFIED TO THE PERFORMANCE CRITERIA OF THE U.S. EPA WATERSENSE SPECIFICATION FOR TANK-TYPE TOILETS.

B. SHOWERHEADS SHALL HAVE A MAXIMUM FLOW RATE OF NOT MORE THAN 1.8 GALLONS PER MINUTE AT 80 PSI. SHOWERHEADS SHALL BE CERTIFIED TO THE PERFORMANCE CRITERIA OF THE U.S. EPA WATERSENSE SPECIFICATION FOR SHOWERHEADS.

C. WHEN A SHOWER IS SERVED BY MORE THAN ONE SHOWERHEAD, THE COMBINED FLOW RATE OF ALL SHOWER-HEADS AND/OR OTHER SHOWER OUTLETS CONTROLLED BY A SINGLE VALVE SHALL NOT EXCEED 1.8 GALLONS PER MINUTE AT 80 PSI, OR THE SHOWER SHALL BE DESIGNED TO ALLOW ONLY ONE SHOWER OUTLET TO BE IN OPERATION AT A TIME. A HAND-HELD SHOWER SHALL BE CONSIDERED A SHOWERHEAD.

D. THE MAXIMUM FLOW RATE OF RESIDENTIAL LAVATORY FAUCETS SHALL NOT EXCEED 1.2 GALLONS PER MINUTE AT 60 PSI. THE MINIMUM FLOW RATE OF RESIDENTIAL LAVATORY FAUCETS SHALL NOT BE LESS THAN 0.8 GALLONS PER MINUTE AT 20 PSI.

E. THE MAXIMUM FLOW RATE OF KITCHEN FAUCETS SHALL NOT EXCEED 1.8 GALLONS PER MINUTE AT 60 PSI. KITCHEN FAUCETS MAY TEMPORARILY INCREASE THE FLOW ABOVE THE MAXIMUM RATE, BUT NOT TO EXCEED 2.2 GALLONS PER MINUTE AT 60 PSI, AND MUST DEFAULT TO A MAXIMUM FLOW RATE OF 1.8 GALLONS PER MINUTE AT 60 PSI.

6. PLUMBING FIXTURES AND FITTINGS SHALL BE INSTALLED IN ACCORDANCE WITH THE CALIFORNIA PLUMBING CODE, AND SHALL MEET THE APPLICABLE STANDARDS REFERENCED IN TABLE 1701.1 OF THE CALIFORNIA PLUMBING CODE.

7. RESIDENTIAL DEVELOPMENTS SHALL COMPLY WITH COUNTY OF SANTA CLARA WATER EFFICIENT LANDSCAPE ORDINANCE OR THE CURRENT CALIFORNIA DEPARTMENT OF WATER RESOURCES' MODEL WATER EFFICIENT LANDSCAPE ORDINANCE (MWELO), WHICHEVER IS MORE STRINGENT.

8. Not used.

9. ANNULAR SPACES AROUND PIPES, ELECTRIC CABLES, CONDUITS OR OTHER OPENINGS IN SOLE/BOTTOM PLATES AT EXTERIOR WALLS SHALL BE PROTECTED AGAINST THE PASSAGE OF RODENTS BY CLOSING SUCH OPENINGS WITH CEMENT MORTAR, CONCRETE MASONRY OR A SIMILAR METHOD ACCEPTABLE TO THE COUNTY OF SANTA CLARA.

A. A CONSTRUCTION WASTE MANAGEMENT PLAN IS PROVIDED. THE CONSTRUCTION WASTE MANAGEMENT PLAN SHALL BE UPDATED AS NECESSARY AND SHALL BE AVAILABLE DURING CONSTRUCTION FOR EXAMINATION BY THE COUNTY OF SANTA CLARA.

1. IDENTIFY THE CONSTRUCTION AND DEMOLITION WASTE MATERIALS TO BE DIVERTED FROM DISPOSAL BY RECYCLING, REUSE ON THE PROJECT OR SALVAGE FOR FUTURE USE OR SALE.
2. SPECIFY IF CONSTRUCTION AND DEMOLITION WASTE MATERIALS WILL BE SORTED ON-SITE (SOURCE-SEPARATED) OR BULK MIXED (SINGLE STREAM).
3. IDENTIFY DIVERSION FACILITIES WHERE THE CONSTRUCTION AND DEMOLITION WASTE MATERIAL WILL BE TAKEN.
4. IDENTIFY CONSTRUCTION METHODS EMPLOYED TO REDUCE THE AMOUNT OF CONSTRUCTION AND DEMOLITION WASTE GENERATED.
5. Specify that the amount of construction and demolition waste materials diverted shall be calculated by weight or volume, but not by both.

B. A WASTE MANAGEMENT COMPANY CAN BE UTILIZED IF APPROVED BY THE COUNTY OF SANTA CLARA. SEE CALGREEN 4.408.3 FOR FURTHER .DETAILS

11. DOCUMENTATION SHALL BE PROVIDED TO THE COUNTY OF SANTA CLARA WHICH DEMONSTRATES COMPLIANCE WITH NOTE 10.

12. AT THE TIME OF FINAL INSPECTION, A MANUAL, COMPACT DISC, WEB-BASED REFERENCE, OR OTHER MEDIA ACCEPTABLE TO THE COUNTY OF SANTA CLARA INCLUDES ALL OF THE REQUIRED INFORMATION, SHALL BE PLACED IN THE BUILDING. SEE CALGREEN 4.410.1 FOR DETAILS OF REQUIRED INFORMATION.

13. ANY INSTALLED GAS FIREPLACE SHALL BE A DIRECT-VENT SEALED-COMBUSTION TYPE. ANY INSTALLED WOODSTOVE OR PELLET STOVE SHALL COMPLY WITH U.S. EPA NEW SOURCE PERFORMANCE STANDARDS (NSPS) EMISSION LIMITS AS APPLICABLE, AND SHALL HAVE A PERMANENT LABEL INDICATING THEY ARE CERTIFIED TO MEET THE EMISSION LIMITS. WOODSTOVES, PELLET STOVES AND FIREPLACES SHALL ALSO COMPLY WITH APPLICABLE SANTA CLARA COUNTY ORDINANCES AND BAY AREA AIR QUALITY MANAGEMENT DISTRICT REGULATION 6, RULE 3.

14. AT THE TIME OF ROUGH INSTALLATION, DURING STORAGE ON THE CONSTRUCTION SITE AND UNTIL FINAL STARTUP OF THE HEATING, COOLING AND VENTILATING EQUIPMENT, ALL DUCT AND OTHER RELATED AIR DISTRIBUTION COMPONENT OPENINGS SHALL BE COVERED WITH TAPE, PLASTIC, SHEET METAL OR OTHER METHODS ACCEPTABLE TO THE COUNTY OF SANTA CLARA TO REDUCE THE AMOUNT OF WATER, DUST AND DEBRIS, WHICH MAY ENTER THE SYSTEM.

15. ADHESIVES, SEALANTS AND CAULKS USED ON THE PROJECT SHALL MEET THE REQUIREMENTS OF CALGREEN TABLES 4.504.1 OR 4.504.2 AS REPRODUCED ON SHEET CG-1. SUCH PRODUCTS ALSO SHALL COMPLY WITH THE RULE 1168 PROHIBITION ON THE USE OF CERTAIN TOXIC COMPOUNDS (CHLOROFORM, ETHYLENE DICHLORIDE, METHYLENE CHLORIDE, PERCHLOROETHYLENE AND TRICHLOROETHYLENE), EXCEPT FOR AEROSOL PRODUCTS, AS SPECIFIED BELOW.

AEROSOL ADHESIVES, AND SMALLER UNIT SIZES OF ADHESIVES, AND SEALANT OR CAULKING COMPOUNDS (IN UNITS OF PRODUCT, LESS PACKAGING, WHICH DO NOT WEIGH MORE THAN 1 POUND AND DO NOT CONSIST OF MORE THAN 16 FLUID OUNCES) SHALL COMPLY WITH STATEWIDE VOC STANDARDS AND OTHER REQUIREMENTS, INCLUDING PROHIBITIONS ON USE OF CERTAIN TOXIC COMPOUNDS, OF CALIFORNIA CODE OF REGULATIONS, TITLE 17, COMMENCING WITH SECTION 94507.

16. ARCHITECTURAL PAINTS AND COATINGS SHALL COMPLY WITH VOC LIMITS AS SHOWN IN TABLE 4.504.3 SHEET CG-1. THE VOC CONTENT LIMIT FOR COATINGS THAT DO NOT MEET THE DEFINITIONS FOR THE SPECIALTY COATINGS CATEGORIES LISTED IN TABLE 4.504.3 SHALL BE DETERMINED BY CLASSIFYING THE COATING AS A FLAT, NONFLAT OR NONFLAT-HIGH GLOSS COATING, BASED ON ITS GLOSS, AS DEFINED IN SUBSECTIONS 4.21, 4.36, AND 4.37 OF THE 2007 CALIFORNIA AIR RESOURCES BOARD, SUGGESTED CONTROL MEASURE, AND THE CORRESPONDING FLAT, NONFLAT OR NON-FLAT-HIGH GLOSS VOC LIMIT IN TABLE 4.504.3, SHEET CG-1 SHALL APPLY.

17. AEROSOL PAINTS AND COATINGS SHALL MEET THE PRODUCT-WEIGHTED MIR LIMITS FOR ROC IN SECTION 94522(A)(2) AND OTHER REQUIREMENTS, INCLUDING PROHIBITIONS ON USE OF CERTAIN TOXIC COMPOUNDS AND OZONE DEPLETING SUBSTANCES, IN SECTIONS 94522(E)(1) AND (F)(1) OF CALIFORNIA CODE OF REGULATIONS, TITLE 17, COMMENCING WITH SECTION 94520; AND IN AREAS UNDER THE JURISDICTION OF THE BAY AREA AIR QUALITY MANAGEMENT DISTRICT ADDITIONALLY COMPLY WITH THE PERCENT VOC BY WEIGHT OF PRODUCT LIMITS OF REGULATION 8, RULE 49.

18. VERIFICATION OF COMPLIANCE WITH NOTES 15, 16, AND 17 SHALL BE PROVIDED AT THE REQUEST OF THE COUNTY OF SANTA CLARA.

19. ALL CARPET AND CARPET CUSHION INSTALLED IN THE BUILDING INTERIOR SHALL MEET THE REQUIREMENTS OF CALIFORNIA DEPARTMENT OF PUBLIC HEALTH, "STANDARD METHOD FOR THE TESTING AND EVALUATION OF VOLATILE ORGANIC CHEMICAL EMISSIONS FROM INDOOR SOURCES USING ENVIRONMENTAL CHAMBERS," VERSION 1.2, JANUARY 2017 (EMISSION TESTING METHOD FOR CALIFORNIA SPECIFICATION 01350)

ALL CARPET ADHESIVE SHALL MEET THE REQUIREMENTS OF TABLE 4.504.1, SHEET CG-1.

20. WHERE RESILIENT FLOORING IS INSTALLED, AT LEAST 80 PERCENT OF FLOOR AREA RECEIVING RESILIENT FLOORING SHALL MEET THE REQUIREMENTS OF THE CALIFORNIA DEPARTMENT OF PUBLIC HEALTH, "STANDARD METHOD FOR THE TESTING AND EVALUATION OF VOLATILE ORGANIC CHEMICAL EMISSIONS FROM INDOOR SOURCES USING ENVIRONMENTAL CHAMBERS," VERSION 1.2, JANUARY 2017 (EMISSION TESTING METHOD FOR CALIFORNIA SPECIFICATION 01350)

21. HARDWOOD PLYWOOD, PARTICLEBOARD AND MEDIUM DENSITY FIBERBOARD COMPOSITE WOOD PRODUCTS USED ON THE INTERIOR OR EXTERIOR OF THE BUILDING SHALL MEET THE REQUIREMENTS FOR FORMALDEHYDE AS SPECIFIED IN TABLE 4.504.5 SHEET CG-1.

22. VERIFICATION OF COMPLIANCE WITH NOTE 21 SHALL BE PROVIDED AT THE REQUEST OF THE COUNTY OF SANTA CLARA.

23. CONCRETE SLAB FOUNDATIONS REQUIRED TO HAVE A VAPOR RETARDER BY CBC, CHAPTER 19 OR CONCRETE SLAB-ON-GROUND FLOORS REQUIRED TO HAVE A VAPOR RETARDER BY CRC CHAPTER 5, SHALL COMPLY WITH FOLLOWING REQUIREMENT:

A CAPILLARY BREAK SHALL BE INSTALLED IN COMPLIANCE WITH AT LEAST ONE OF THE FOLLOWING:

A. A 4-INCH-THICK BASE OF 1/2 INCH OR LARGER CLEAN AGGREGATE SHALL BE PROVIDED WITH A VAPOR RETARDER IN DIRECT CONTACT WITH CONCRETE AND A CONCRETE MIX DESIGN, WHICH WILL ADDRESS BLEEDING, SHRINKAGE, AND CURLING, SHALL BE USED.

B. A SLAB DESIGN SPECIFIED BY THE LICENSED DESIGN PROFESSIONAL.

24. BUILDING MATERIALS WITH VISIBLE SIGNS OF WATER DAMAGE SHALL NOT BE INSTALLED. WALL AND FLOOR FRAMING SHALL NOT BE ENCLOSED WHEN THE FRAMING MEMBERS EXCEED 19 PERCENT MOISTURE CONTENT. INSULATION PRODUCTS WHICH ARE VISIBLY WET OR HAVE A HIGH MOISTURE CONTENT SHALL BE REPLACED OR ALLOWED TO DRY PRIOR TO ENCLOSURE IN WALL OR FLOOR CAVITIES. WET-APPLIED INSULATION PRODUCTS SHALL FOLLOW THE MANUFACTURERS' DRYING RECOMMENDATIONS PRIOR TO ENCLOSURE.

25. EACH BATHROOM SHALL BE MECHANICALLY VENTILATED AND SHALL COMPLY WITH THE FOLLOWING:

GIST RD. SFR 1

APN544-23-041; PROPOSED ADDRESS: 20555 GIST RD, LOS GATOS, CA 95033

REVISION HISTORY

S3DA Structural & Architectural Design
4196 Adams Ave. San Diego CA 92116
(619) 404-0220

Mr. Nader Moavenian
nader.m@s3da-design.com

STAMP

1. The contractor must check all dimensions on-site before commencing work

2. These drawings are to be read in conjunction with all relevant designer, engineer or specialist drawings and specifications

3. The contractor is responsible for providing all necessary temporary support to the building and any adjacent structures

COUNTY APPROVAL STAMP

REVISION DATE
01/02/2021

DRAWING NAME
CALGreen 3

Drawing Scale

CG-3

CALGreen One or Two Family Residential Project Mandatory and Tier 1 Requirements

County of Santa Clara

GIST RD. SFR 1

APN544-23-041; PROPOSED ADDRESS: 20555
GIST RD, LOS GATOS, CA 95033

REVISION HISTORY

S3DA Structural & Architectural Design
4196 Adams Ave. San Diego CA 92116
(619) 404-0220

Mr. Nader Moavenian
nader.m@s3da-design.com

STAMP

1. The contractor must check all dimensions on-site before commencing work

2. These drawings are to be read in conjunction with all relevant designer, engineer or specialist drawings and specifications

3. The contractor is responsible for providing all necessary temporary support to the building and any adjacent structures

COUNTY APPROVAL STAMP

REVISION DATE
01/02/2021

DRAWING NAME
CALGreen 4

Drawing Scale

CG-4

CALGreen One or Two Family Residential Project Mandatory and Tier 1 Requirements

County of Santa Clara

NOTES

THE GOAL OF THIS LANDSCAPE ARCHITECTURE PROJECT IS TO ESTABLISH A FIRE-SAFE DROUGHT-RESISTANT NATIVE CALIFORNIA OAK GROVE ON TWO ADJACENT LOTS WHILE PROVIDING AMPLE OPPORTUNITIES FOR GROWING FRUIT TREES, DECORATIVE TREES, GRASSES, FLOWERS AND VEGETABLES IN ORDER TO CREATE A BEAUTIFUL AND SUSTAINABLE LANDSCAPE ENVIRONMENT FOR THE OWNERS

GENERAL

ORIGINAL TREE TYPES, DIAMETERS AND CATALOG NUMBERS IN THIS PLAN ARE FROM JAN 29, 2015 ARBORIST SURVEY REPORT PREPARED BY NIGEL BELTON, ISA CERTIFIED ARBORIST WE-0410A:

1. A TOTAL OF 103 TREES IN DIFFERENT CONDITIONS HAVE BEEN RECORDED ON LOTS APN 544-230-41 AND APN 544-23-042, OF WHICH **THE ARBORIST RECOMMENDED 53 FOR REMOVAL**:
   a. 9 DEAD TREES
   b. 33 TREES RECOMMENDED FOR REMOVAL DUE TO POOR HEALTH, SANITATION OR PUBLIC SAFETY REASONS
   c. 10 TREES RECOMMENDED FOR REMOVAL TO MAKE WAY FOR NEW STRUCTURES BASED ON THE PREVIOUS OWNER'S PRELIMINARY ARCHITECTURAL PLANS

2. THE ARBORIST REPORT DID NOT TAKE CONSIDERATION OF THE FIRE MARSHALL'S DEFENSIBLE SPACE REQUIREMENTS AS WELL AS NEW REQUIREMENT TO PROVIDE 18-FOOT WIDE ACCESS DRIVEWAY. THIS PLAN ADDRESSES THESE OMISSIONS AND ADDITIONS.

3. IN VIEW OF THE UPDATED FIRE MARSHALL'S REQUIREMENTS TO CREATE 18-FOOT WIDE DRIVEWAY AS WELL AS 30-FOOT DEFENSIBLE SPACE AROUND THE SINGLE FAMILY RESIDENCES, BASED ON THE UPDATED ARCHITECTURAL PLANS BY THE PRESENT OWNERS OF THE PARCELS:

   a. THE PRESENT PLAN PRESERVES FOUR ORIGINAL TREES THAT WERE RECOMMENDED FOR REMOVAL BY THE ARBORIST TO MAKE WAY FOR STRUCTURES – TWO ON EACH LOT:

      #71 MADRONE ON LOT APN 544-23-042
      #73 MADRONE ON LOT APN 544-23-042

      #113 MADRONE ON LOT APN 544-23-041
      #114 MADRONE ON LOT APN 544-23-041

   b. THIS PLAN PROPOSES REMOVAL OF SEVENTEEN ADDITIONAL TREES:

      NINE TREES ON LOT APN 544-23-042
      #8A BLACK OAK
      #92 MADRONE
      #93 MADRONE
      #94 MADRONE
      #100 BAY LAUREL
      #101 BAY LAUREL
      #102 BAY LAUREL
      #106 BIG LEAF MAPLE
      #108 BIG LEAF MAPLE

      EIGHT TREES ON LOT APN 544-23-041
      #123 MADRONE
      #124 MADRONE
      #125 BAY LAUREL
      #126 MADRONE
      #132 DOUGLAS FIR
      #133 MADRONE
      #134 BAY LAUREL
      #135 CANYON LIVE OAK

      THE NET EFFECT OF THE ARCHITECTURAL UPDATE AND SATISFYING THE FIRE MARSHALL'S 30-FOOT DEFENSIBLE SPACE REQUIREMENT AND INCREASED WIDTH OF ACCESS DRIVEWAY IS THAT THE NUMBER OF TREES TO BE REMOVED TO MAKE WAY FOR STRUCTURES IS 13 MORE THAN ORIGINALLY ESTIMATED FOR A TOTAL OF 23.

4. ALL REMOVED TREES WILL BE REPLACED ACCORDING TO THE REPLACEMENT RATIOS SPECIFIED IN THE BUILDING SITE APPROVAL DOCUMENT

5. BUILDING SITE APPROVAL DOCUMENT STATES THAT REPLACEMENT TREES CAN BE IN 15-GALLON OR 24"-BOX FORMATS, DUE TO AREA CONSTRAINTS AND 30-FT HORIZONTAL TREE SPACING RECOMMENDED FOR FIRE SAFETY BY CALFIRE, ONLY ORNAMENTAL TREES WILL BE IN 15-GALLON FORMAT, ALL OTHER REPLACEMENT TREES ARE 24"-BOX TREES. FURTHER, IN VIEW OF THE REQUIREMENTS FOR USING DROUGHT RESISTANT NATIVE CALIFORNIA SPECIES, AND WITH NATIVE AMERICAN AND CALIFORNIA HISTORICAL HERITAGE IN MIND, THE CHOICE OF TREE SPECIES FOR THE MAJORITY OF TREE REPLACEMENT IS IN FAVOR OF TWO WHITE OAK VARIETIES:

   i. BLUE OAK – QUERCUS DOUGLASII
   ii. OREGON WHITE OAK (GARRY OAK) – QUERCUS GARRYANA VAR. GARRYANA

   THESE DROUGHT-TOLERANT CALIFORNIA-NATIVE SPECIES ARE NOT KNOWN TO BE SUSCEPTIBLE TO PHYTOPHTHORA RAMORUM FUNGUS CAUSING SUDDEN OAK DEATH.

   LANDSCAPING CONTRACTOR MAY PLANT BLUE AND GARRY OAKS IN ANY COMBINATION OR PROPORTION AS SHOWN ON THESE PLANS SUBJECT TO AVAILABILITY OF 24"-BOX OAKS AT NURSERIES.

6. REPLACEMENT OAK TREES ARE GENERALLY SPACED 30 FEET FROM EACH OTHER AND 20-30 FEET FROM ORIGINAL TREES AS SHOWN ON THESE PLANS.

7. REPLACEMENT FRUIT TREES ARE GENERALLY SPACED 20 FEET FROM EACH OTHER AND 20-30 FEET FROM REPLACEMENT OAK TREES AND ORIGINAL NATIVE TREES AS SHOWN ON THESE PLANS.

8. 97 REPLACEMENT TREES WILL BE PLANTED AS SHOWN ON THESE PLANS:
   44 REPLACEMENT TREES ON LOT APN 544-23-041
   a. 22 OAK TREES
   b. 7 FRUIT TREES
   c. 15 ORNAMENTAL TREES

   53 REPLACEMENT TREES ON LOT APN 544-23-042
   d. 11 OAK TREES
   e. 11 FRUIT TREES
   f. 31 ORNAMENTAL TREES

9. FRUIT TREES TO BE PLANTED IN CORROSION-RESISTANT GOPHER CAGE BASKETS AS SHOWN.

10. FRUIT TREE VARIETIES THAT GENERALLY DO WELL IN THE AREA ARE RECOMMENDED FOR THIS PROJECT – PERSIMMONS, CYTRUS TREES, APPLES, AVOCADO, PEARS & ALMONDS OF THE FOLLOWING SORTS:
    a. COFFEECAKE PERSIMMON
    b. CHOCOLATE PERSIMMON
    c. FUYU PERSIMMON (ANY SORT)
    d. IZU PERSIMMON
    e. IMPROVED MEYER LEMON
    f. CARA CARA NAVEL ORANGE
    g. INDEPENDENCE or NONPAREIL ALMOND
    h. FUJI APPLE
    i. GRAVENSTEIN APPLE
    j. BARTLETT PEAR
    k. HAAS AVOCADO

11. DUE TO PREVALENCE OF SHADE AND PARTIAL SHADE ON THE PROPERTY, ORNAMENTAL TREES RECOMMENDED FOR THE PROJECT ARE:
    a. JAPANESE MAPLE
    b. CAMELLIA
    c. CEANOTHUS

12. PRIOR TO CONSTRUCTION, FENCING OR OTHER BARRIERS SHALL BE PLACED TO PROTECT EXISTING TREES NOT PROPOSED FOR REMOVAL THAT ARE LOCATED WITHIN 15 FT. OF CONSTRUCTION/GRADING ACTIVITIES.

13. WHERE SOIL PROPERTIES ARE LESS THAN CONDUCIVE TO HEARTY VEGETATION GROWTH, SOIL AUGMENTATION SHALL BE REQUIRED, PARTICULARLY IN THOSE AREAS SURROUNDING TREE INSTALLATION PITS. THE EXTENT OF SOIL AUGMENTATION SHALL BE BASED ON THE ANTICIPATED DRIP LINE AT MATURITY, WITH A DEPTH ADEQUATE TO PROMOTE ROOT DEVELOPMENT FOR STRUCTURAL STABILITY AND VIGOR.

14. CARE SHOULD BE TAKEN IN PROTECTING TREES #20 AND #103 AS THEIR ROOT SYSTEMS ARE TO BE PARTIALLY COVERED BY DRIVEWAY. IF CONTRACTOR TO PAVE AROUND TREES #20 AND #103, PROTECT ROOTS AS SHOWN IN DETAIL D-12 AND D-13. IF PROTECTING ROOT SYSTEM IS IMPOSSIBLE DURING CONSTRUCTION, THESE TREES CAN BE REPLANTED NEAR THEIR ORIGINAL LOCATIONS WITH AN APPROPRIATELY SIZED HYDRAULIC TREE SPADE.

TREE PRESERVATION AND REPLACEMENT SCHEDULE FOR APN 544-23-41 & APN 544-23-42

ARBORIST PLAN*	TREE NAME	DBH INCHES	RECOMMENDED FOR REMOVAL	POOR HEALTH	DEAD TREE	# of 15G TREES	# of 24" BOX TREES	REPLACEMENT 24" BOX OAK TREE NUMBER ON LANDSCAPING PLAN	REPLACEMENT 24" BOX FRUIT TREE NUMBER ON LANDSCAPING PLAN	REPLACEMENT 15G ORNAMENTAL TREE NUMBER ON LANDSCAPING PLAN
1	California Buckeye	8								
2	Black Oak	11	×	×		**2**	1			1, 2
3	Black Oak	14	×	×		**2**	1			3, 4
4	Bay Laurel	12	×	×		**2**	1			5, 6
5	Black Oak	16								
6	Canyon Live Oak	20								
7	Canyon Live Oak	16	×		×					
8	Douglas Fir	25								
8A	Black Oak	10	×			**2**	1			7, 8
9	Douglas Fir	20	×	×		**3**	2			9, 10, 11
10	Black Oak	27	×	×		4	**3**		12, 13, 14	
11	Black Oak	11	×			**2**	1			15, 16
12	Madrone	12	×		×					
13	Madrone	15	×		×					
14	Madrone	13								
15	Bay Laurel	10	×	×		2	**1**		17	
16	Madrone	16								
17	Madrone	23	×	×		3	**2**		18, 19	
18	Madrone	14	×	×		2	**1**		20	
19	Madrone	24	×	×		4	**3**	21, 22, 23		
20	Madrone	18								
21	Madrone	18								
22	Bay Laurel	10								
23	Canyon Live Oak	25								
24	Canyon Live Oak	15								
25	Bay Laurel	23	×	×		**3**	2			24, 25, 2
58	Douglas Fir	69								
59	Douglas Fir	63	×	×		4	**3**	27, 28, 29		
70	Douglas Fir	22	×	×		3	**2**	30, 31		
71	Madrone	16								
72	Madrone	15	×	×		2	**1**	32		
73	Madrone	16	×	×		2	**1**	65		
74	Madrone	14	×	×		2	**1**	66		
75	Douglas Fir	13	×	×		2	**1**	67		
76	Black Oak	20	×	×		3	**2**	68, 69		
77	Black Oak	21								
78	Black Oak	15								
79	Canyon Live Oak	32								
80	Douglas Fir	24	×	×		4	**3**	33	34, 35	
81	Canyon Live Oak	13								
81A	Black Oak	10	×	×		2	**1**		36	
82	Bay Laurel	15	×	×		2	**1**	37		
83	Madrone	13	×			2	**1**	38		
84	Douglas Fir	14	×		×					
85	Canyon Live Oak	18								
86	Douglas Fir	24	×	×		4	**3**	39, 40, 41		
87	Madrone	19								
88	Douglas Fir	15								
89	Canyon Live Oak	11								
90	Black Oak	15	×	×		2	**1**	42		
91	Gold Cup Oak	9-6-6-7-6								
92	Madrone	19	×			**3**	2			70, 71, 7
93	Madrone	17	×			**2**	1			73, 74
94	Madrone	10	×			**2**	1			75, 76
95	Douglas Fir	13	×	×		2	**1**	43		
96	Douglas Fir	30								
97	Bay Laurel	20								
98	Douglas Fir	21								
98A	Black Oak	18	×	×		3	**2**	44, 45		
99	Douglas Fir	38								
100	Bay Laurel	12	×			**2**	1			77, 78
101	Bay Laurel	12	×			**2**	1			79, 80
102	Bay Laurel	15	×			**2**	1			81, 82
103	Black Oak	16								
104	Black Oak	10			×					
4A	Douglas Fir	10	×	×		**2**	1			46, 47
105	Canyon Live Oak	20								
106	Big Leaf Maple	15	×			**2**	1			83, 84
107	Douglas Fir	16	×	×		2	**1**	48		
108	Big Leaf Maple	17	×			**2**	1			85, 86
109	Bay Laurel	16	×	×		2	**1**	49		
110	Douglas Fir	60								
111	Douglas Fir	49								
112	Madrone	16	×			2	**1**		50	
113	Madrone	22	×			3	**2**		51, 52	
114	Madrone	20	×			3	**2**	53	54	
115	Madrone	19	×	×		3	**2**		55, 56	
116	Madrone	11								
117	Madrone	13								
118	Canyon Live Oak	25	×		×					
119	Canyon Live Oak	34								
120	Madrone	16								
121	Black Oak	20	×		×					
122	Madrone	13								
123	Madrone	23	×			**3**	2			87, 88, 8
124	Madrone	9	×			**2**	1			90, 99
125	Bay Laurel	17	×			2	**1**	91		
126	Madrone	14	×			2	**1**	92		
127	Madrone	23	×		×					
128	Douglas Fir	19								
129	Douglas Fir	16								
130	Madrone	20								
131	Madrone	20	×	×		3	**2**	57	58	
132	Douglas Fir	19	×			**3**	2			93, 94, 9
133	Madrone	16	×			**2**	1	96		
134	Bay Laurel	15	×			**2**	1	97		
135	Canyon Live Oak	13	×			**2**	1			
136	Madrone	14	×	×		**2**	1			59, 60
137	Bay Laurel	16	×	×		**2**	1			61, 62
138	Madrone	20	×		×					
139	Madrone	16	×	×		2	**1**		63	
140	Madrone	15								
141	Madrone	13	×	×		2	**1**	64		

TOTAL ORIGINAL TREES	103
DEAD TREES	9
TREES TO BE REPLACED	52
DUE TO POOR HEALTH	34
IN THE WAY OF STRUCTURES	29
TOTAL REPLACEMENT TREES	97
BLUE AND WHITE OAKS	33
FRUIT TREES	18
ORNAMENTAL TREES	46

*ORIGINAL TREES LISTED BY NUMBER LABEL ASSIGNED BY NIGEL BELTON IN ASCENDING ORDER; TREE NUMBERS ASSIGNED BY ARBORIST ARE NOT CONSEQUENT AS SOME TREES ON THE ORIGINAL REPORT BELONG TO THE ADJACENT LOT APN544-23-040, SOME LABLES ARE ALPHANUMERIC, E.G. 104A

**REPLACEMENT TREE NUMBERING IS CONSEQUENT; LARGEST NUMBER LABEL CORRESPONDS TO TOTAL NUMBER OF REPLACEMENT TREES
***BOLD FONT INDICATES CHOICE OF NUMBER OF REPLACEMENT TREES OF A PARTICULAR FORMAT, E.G. **2** I 1 MEANS THAT A TREE COULD BE REPLACED WITH EITHER TWO 15-GALLON OR ONE 24" BOX REPLACEMENTS, AND THE ARCHITECT CHOSE TO USE TWO 15-GALLON TREES IN THE DESIGN.

FIRE-SAFE CLEARANCES AND SPACING

SHRUBS TREES

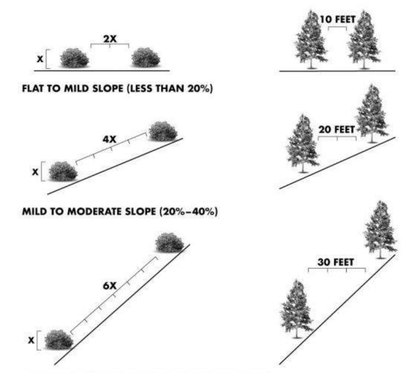

FRUIT TREE PLANTING WITH GOPHER WIRE BASKET

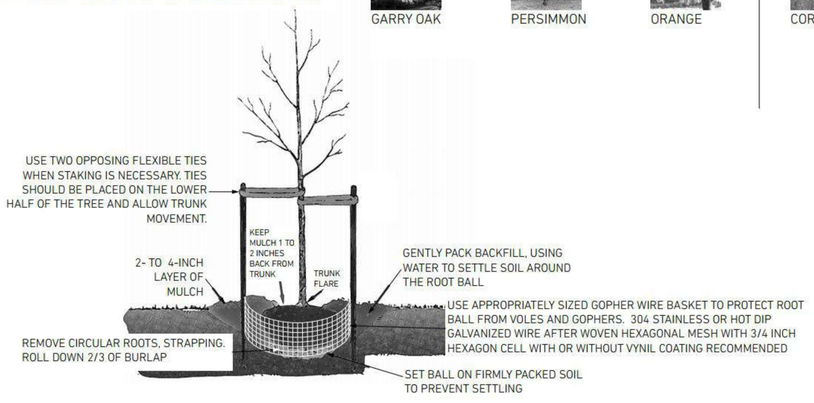

PLANTS AND HARDSCAPE MATERIALS

BLACK MONDO GRASS

BLUE FESCUE

CEANOTHUS

IMPROVED MEYER LEMON

BUTTERFLY BUSH WHITE PROFUSION

BUTTERFLY BUSH ELLEN'S BLUE

MILKWEED

PEAR TREE

MILKWEED CALIFORNIA SNOWY

YARROW

YARROW

APPLE TREE

YARROW

SPIKE GAYFEATHER

GOLDEN ROD

ALMOND

PURPLE CONEFLOWER

PENTAS

DWARF ZINNIAS

VIRGINIA CREEPER VINE

SWEET ALYSSUM

HONEYSUCKLE

HUMMINGBIRD SAGE

LANDSCAPING BRICK

CAMELLIA

PANICLE HYDRANGEA

HOSTAS

SANDSTONE

LAVENDER

JAPANESE MAPLE

BLUE OAK

BLACK GRANITE

GARRY OAK

PERSIMMON

ORANGE

CORTEN STEEL

GIST RD. SFR 1

APN544-23-041; PROPOSED ADDRESS: 20555 GIST RD, LOS GATOS, CA 95033

REVISION HISTORY

S3DA Structural & Architectural Design
4196 Adams Ave. San Diego CA 92116
(619) 404-0220

Mr. Nader Moavenian
nader.m@s3da-design.com

STAMP

1. The contractor must check all dimensions on-site before commencing work

2. These drawings are to be read in conjunction with all relevant designer, engineer or specialist drawings and specifications

3. The contractor is responsible for providing all necessary temporary support to the building and any adjacent structures

COUNTY APPROVAL STAMP

REVISION DATE
01/02/2021

DRAWING NAME
048 Landscaping architecture notes

Drawing Scale
1' = 1'-0", 1:1.96

L-1

GIST RD. SFR 1

APN544-23-041; PROPOSED ADDRESS: 20555 GIST RD, LOS GATOS, CA 95033

REVISION HISTORY

S3DA Structural & Architectural Design
4196 Adams Ave. San Diego CA 92116
(619) 404-0220

Mr. Nader Moavenian
nader.m@s3da-design.com

STAMP

1. The contractor must check all dimensions on-site before commencing work

2. These drawings are to be read in conjunction with all relevant designer, engineer or specialist drawings and specifications

3. The contractor is responsible for providing all necessary temporary support to the building and any adjacent structures

COUNTY APPROVAL STAMP

REVISION DATE
01/02/2021

DRAWING NAME
049 Existing trees

Drawing Scale
1" = 20'

L-2

TREE PROTECTION

1. FOR ALL TREES TO BE RETAINED WITH A CANOPY IN THE DEVELOPMENT AREA OR INTERFACES WITH THE LIMITS OF GRADING FOR ALL PROPOSED DEVELOPMENT ON SITE, THE TREES SHALL BE PROTECTED BY THE PLACEMENT OF RIGID TREE PROTECTIVE FENCING, CONSISTENT WITH THE COUNTY INTEGRATED LANDSCAPE GUIDELINES, AND INCLUDE THE FOLLOWING:
   a. FENCING SHOULD BE PLACED ALONG THE OUTSIDE EDGE OF THE DRIPLINE OF THE TREE OR GROVE OF TREES.
   b. THE FENCING SHALL BE MAINTAINED THROUGHOUT THE SITE CONSTRUCTION PERIOD AND SHALL BE INSPECTED PERIODICALLY FOR DAMAGE AND PROPER FUNCTION.
   c. FENCING SHALL BE REPAIRED, AS NECESSARY, TO PROVIDE A PHYSICAL BARRIER FROM CONSTRUCTION ACTIVITIES.
   d. SIGNAGE STATING

      "WARNING – THIS FENCING SHALL NOT BE REMOVED WITHOUT PERMISSION FROM THE SANTA CLARA COUNTY PLANNING OFFICE (408) 299-5770. COUNTY OF SANTA CLARA TREE PROTECTION MEASURES MAY BE FOUND AT http://www.sccplanning.gov."

      SHALLSHALL BE PLACED ON THE TREE PROTECTIVE FENCING UNTIL FINAL OCCUPANCY.
2. PRIOR TO COMMENCEMENT OF ANY CONSTRUCTION ACTIVITY, TREE PROTECTIVE FENCING SHALL BE SECURELY IN PLACE AND INSPECTED BY THE LAND DEVELOPMENT ENGINEERING INSPECTOR.
3. SEE EXISTING TREE PROTECTION DETAILS FOR MORE INFORMATION.

CHAIN LINK PROTECTIVE TREE FENCING

NOTES:

#20 PACIFIC MADRONE AND #103 BLACK OAK TREE PRESERVATION

ON-SITE CONDITIONS ARE SUCH THAT TREE ROOTS FOR OAK #103 AND PACIFIC MADRONE #20 ARE LIKELY TO SUSTAIN SIGNIFICANT DAMAGE DURING GRADING. REMOVE TREES WITH HYDRAULIC TREE SPADE AND SET ASIDE PRIOR TO GRADING. WRAP ROOT BALL IN BURLAP FOR TEMPORARY STORAGE. ADD 10 GALLONS OF WATER TO ROOT BALL EVERY TWO DAYS DURING STORAGE. REPLANT IN CLOSE PROXIMITY TO THE ORIGINAL LOCATION AS SHOWN ON PLANS IMMEDIATELY AFTER GRADING TO MINIMIZE TIME OUT OF SOIL FOR THESE TREES.

GIST RD. SFR 1

APN544-23-041; PROPOSED ADDRESS: 20555

GIST RD, LOS GATOS, CA 95033

REVISION HISTORY

S3DA Structural & Architectural Design
4196 Adams Ave. San Diego CA 92116
(619) 404-0220

Mr. Nader Moavenian
nader.m@s3da-design.com

STAMP

1. The contractor must check all dimensions on-site before commencing work

2. These drawings are to be read in conjunction with all relevant designer, engineer or specialist drawings and specifications

3. The contractor is responsible for providing all necessary temporary support to the building and any adjacent structures

COUNTY APPROVAL STAMP

REVISION DATE
01/02/2021

DRAWING NAME
050 Tree preservation plan

Drawing Scale
1" = 20'

L-3

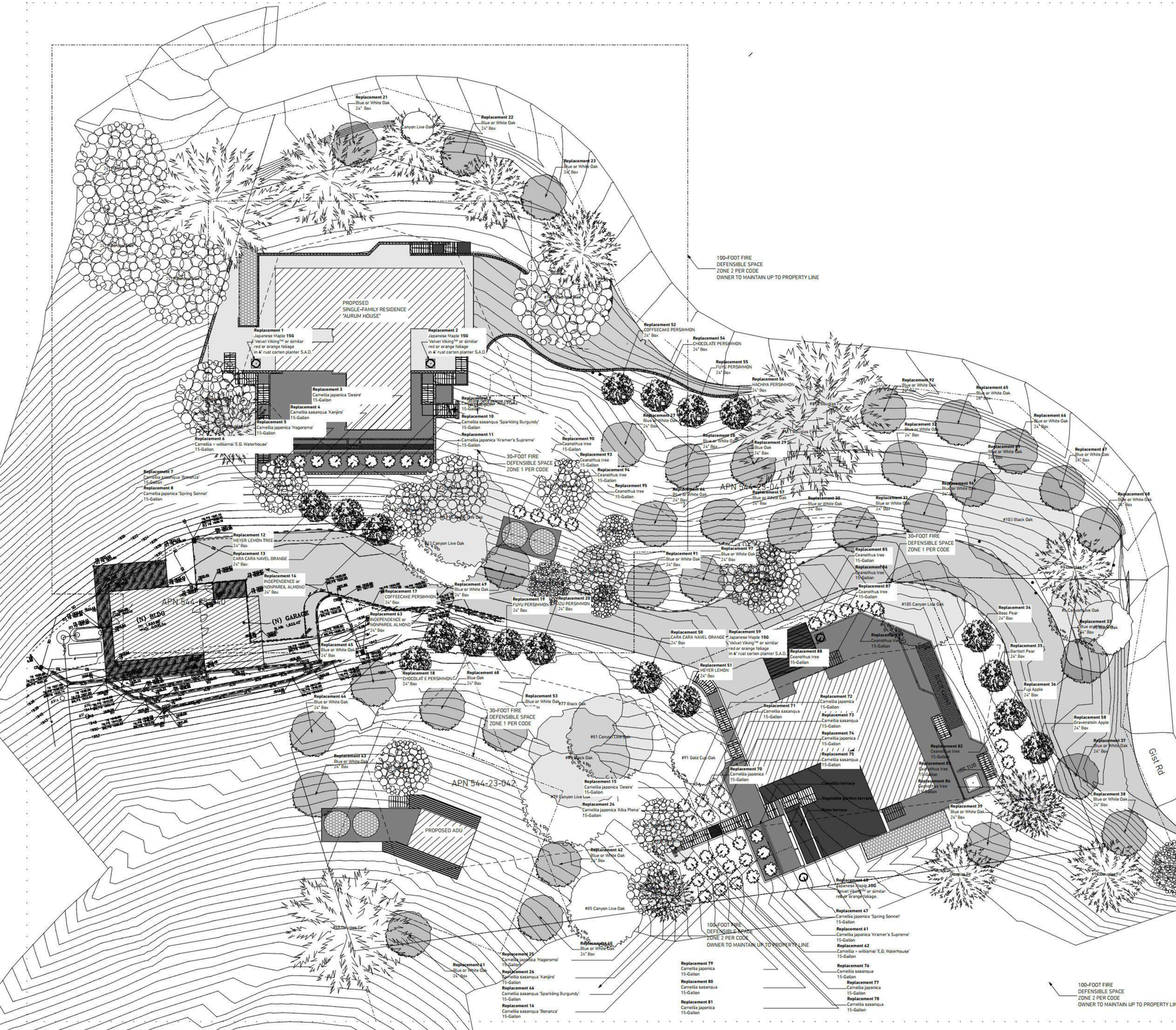

REPLACEMENT TREES FOR APN 544-23-41 & APN 544-23-42

REPLACEMENT TREE # ON LANDSCAPING PLAN	TREE NAME/CPECIES	TREE FORMAT	TYPE
1	JAPANESE MAPLE	15G	ORNAMENTAL
2	JAPANESE MAPLE	15G	ORNAMENTAL
3	CAMELLIA	15G	ORNAMENTAL
4	CAMELLIA	15G	ORNAMENTAL
5	CAMELLIA	15G	ORNAMENTAL
6	CAMELLIA	15G	ORNAMENTAL
7	CAMELLIA	15G	ORNAMENTAL
8	CAMELLIA	15G	ORNAMENTAL
9	CAMELLIA	15G	ORNAMENTAL
10	CAMELLIA	15G	ORNAMENTAL
11	CAMELLIA	15G	ORNAMENTAL
12	MEYER LEMON	24" BOX	FRUIT
13	NAVEL ORANGE	24" BOX	FRUIT
14	ALMOND	24" BOX	FRUIT
15	CAMELLIA	15G	ORNAMENTAL
16	CAMELLIA	15G	ORNAMENTAL
17	PERSIMMON	24" BOX	FRUIT
18	PERSIMMON	24" BOX	FRUIT
19	PERSIMMON	24" BOX	FRUIT
20	PERSIMMON	24" BOX	FRUIT
21	WHITE OAK	24" BOX	OAK
22	WHITE OAK	24" BOX	OAK
23	WHITE OAK	24" BOX	OAK
24	CAMELLIA	15G	FRUIT
25	CAMELLIA	15G	FRUIT
26	CAMELLIA	15G	FRUIT
27	WHITE OAK	24" BOX	OAK
28	WHITE OAK	24" BOX	OAK
29	WHITE OAK	24" BOX	OAK
30	WHITE OAK	24" BOX	OAK
31	WHITE OAK	24" BOX	OAK
32	WHITE OAK	24" BOX	OAK
33	WHITE OAK	24" BOX	OAK
34	PEAR	24" BOX	FRUIT
35	PEAR	24" BOX	FRUIT
36	APPLE	24" BOX	FRUIT
37	WHITE OAK	24" BOX	OAK
38	WHITE OAK	24" BOX	OAK
39	WHITE OAK	24" BOX	OAK
40	WHITE OAK	24" BOX	OAK
41	WHITE OAK	24" BOX	OAK
42	WHITE OAK	24" BOX	OAK
43	WHITE OAK	24" BOX	OAK
44	WHITE OAK	24" BOX	OAK
45	WHITE OAK	24" BOX	OAK
46	CAMELLIA	15G	ORNAMENTAL
47	CAMELLIA	15G	ORNAMENTAL
48	WHITE OAK	24" BOX	OAK
49	WHITE OAK	24" BOX	OAK
50	NAVEL ORANGE	24" BOX	FRUIT
51	MEYER LEMON	24" BOX	FRUIT
52	PERSIMMON	24" BOX	FRUIT
53	WHITE OAK	24" BOX	OAK
54	PERSIMMON	24" BOX	FRUIT
55	PERSIMMON	24" BOX	FRUIT
56	PERSIMMON	24" BOX	FRUIT
57	WHITE OAK	24" BOX	OAK
58	APPLE	24" BOX	FRUIT
59	JAPANESE MAPLE	15G	ORNAMENTAL
60	JAPANESE MAPLE	15G	ORNAMENTAL
61	CAMELLIA	15G	ORNAMENTAL
62	CAMELLIA	15G	ORNAMENTAL
63	ALMOND	24" BOX	FRUIT
64	WHITE OAK	24" BOX	OAK
65	WHITE OAK	24" BOX	OAK
66	WHITE OAK	24" BOX	OAK
67	WHITE OAK	24" BOX	OAK
68	WHITE OAK	24" BOX	OAK
69	WHITE OAK	24" BOX	OAK
70	CAMELLIA	15G	ORNAMENTAL
71	CAMELLIA	15G	ORNAMENTAL
72	CAMELLIA	15G	ORNAMENTAL
73	CAMELLIA	15G	ORNAMENTAL
74	CAMELLIA	15G	ORNAMENTAL
75	CAMELLIA	15G	ORNAMENTAL
76	CAMELLIA	15G	ORNAMENTAL
77	CAMELLIA	15G	ORNAMENTAL
78	CAMELLIA	15G	ORNAMENTAL
79	CAMELLIA	15G	ORNAMENTAL
80	CAMELLIA	15G	ORNAMENTAL
81	CAMELLIA	15G	ORNAMENTAL
82	CEANOTHUS	15G	ORNAMENTAL
83	CEANOTHUS	15G	ORNAMENTAL
84	CEANOTHUS	15G	ORNAMENTAL
85	CEANOTHUS	15G	ORNAMENTAL
86	CEANOTHUS	15G	ORNAMENTAL
87	CEANOTHUS	15G	ORNAMENTAL
88	CEANOTHUS	15G	ORNAMENTAL
89	CEANOTHUS	15G	ORNAMENTAL
90	CEANOTHUS	15G	ORNAMENTAL
91	WHITE OAK	24" BOX	OAK
92	WHITE OAK	24" BOX	OAK
93	CEANOTHUS	15G	ORNAMENTAL
94	CEANOTHUS	15G	ORNAMENTAL
95	CEANOTHUS	15G	ORNAMENTAL
96	WHITE OAK	24" BOX	OAK
97	WHITE OAK	24" BOX	OAK

REPLACEMENT TREE TYPE SUMMARY
OAK TREES: 33
FRUIT TREES: 18
ORNAMENTAL TREES: 46

TREE FORMAT SUMMARY
24" BOX TREES: 51
15 GALLON TREES: 46

GIST RD. SFR 1

APN544-23-041; PROPOSED ADDRESS: 20555 GIST RD, LOS GATOS, CA 95033

REVISION HISTORY

S3DA Structural & Architectural Design
4196 Adams Ave. San Diego CA 92116
(619) 404-0220

Mr. Nader Moavenian
nader.m@s3da-design.com

STAMP

1. The contractor must check all dimensions on-site before commencing work

2. These drawings are to be read in conjunction with all relevant designer, engineer or specialist drawings and specifications

3. The contractor is responsible for providing all necessary temporary support to the building and any adjacent structures

COUNTY APPROVAL STAMP

REVISION DATE
01/02/2021

DRAWING NAME
051 Replacement trees

Drawing Scale
1" = 20'

L-4

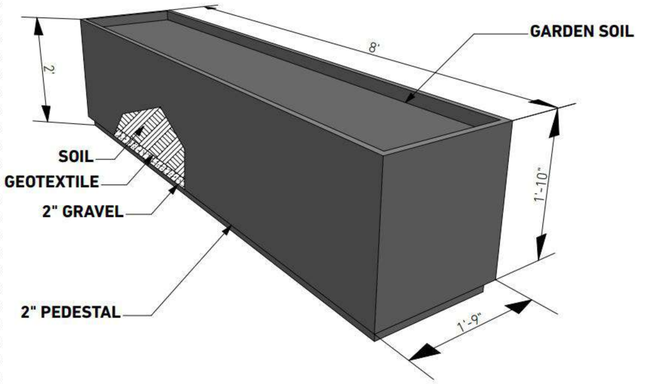

3D-14 VEGETABLE PLANTER 1:100

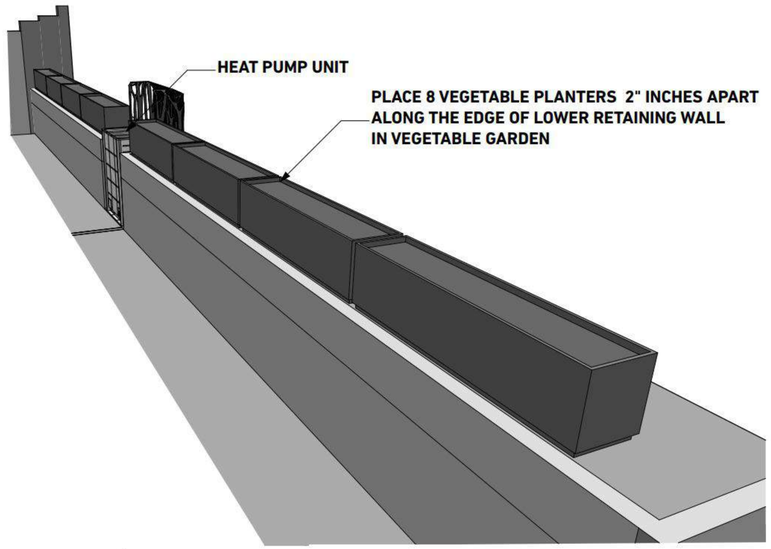

VEGETABLE PLANTERS

VEGETABLE PLANTERS TO BE MADE OF 3MM CORTEN STEEL: 96"L×21"W×22"H. CENTER PLANTER ON A 2" 92"L×17"W STONE OR CONCRETE PEDESTAL AS SHOWN. MAKE VENT HOLES AT BOTTOM OF PLANTER AROUND THE PERIMETER EDGES EXTENDING BEYOND THE PEDESTAL.

INSTALL NINE VEGETABLE GARDEN PLANTERS IN LINE 1.5" APART. PLACE 2" OF PEA GRAVEL AT BOTTOM OF PLANTERS, COVER GRAVEL LAYER WITH GEOTEXTILE AND FILL PLANTER WITH GARDEN SOIL 2" CLEAR FROM TOP EDGE. INSTALL DRIP OR SPRAY IRRIGATION TUBING IF DESIRED.

JAPANESE MAPLE PLANTERS

JAPANESE MAPLE PLANTER BOXES TO BE MADE OF 3MM CORTEN STEEL: 48"L×48"W×24"H. CENTER PLANTER ON 2" 44"L×44"W STONE OR CONCRETE PEDESTAL AS SHOWN. MAKE VENT HOLES AT BOTTOM OF PLANTER AROUND THE PERIMETER EDGES EXTENDING BEYOND THE PEDESTAL.

PLACE 2" OF PEA GRAVEL AT BOTTOM OF PLANTERS, COVER GRAVEL LAYER WITH GEOTEXTILE AND FILL PLANTER WITH GARDEN SOIL 2" CLEAR FROM TOP EDGE. INSTALL DRIP OR SPRAY IRRIGATION TUBING IF DESIRED.

CHOOSE A RED OR ORANGE JAPANESE MAPLE TREE THAT WOULD BE FORMED TO SPREAD LOW AND SIDEWAYS RATHER THAN TALL AND UPWARDS

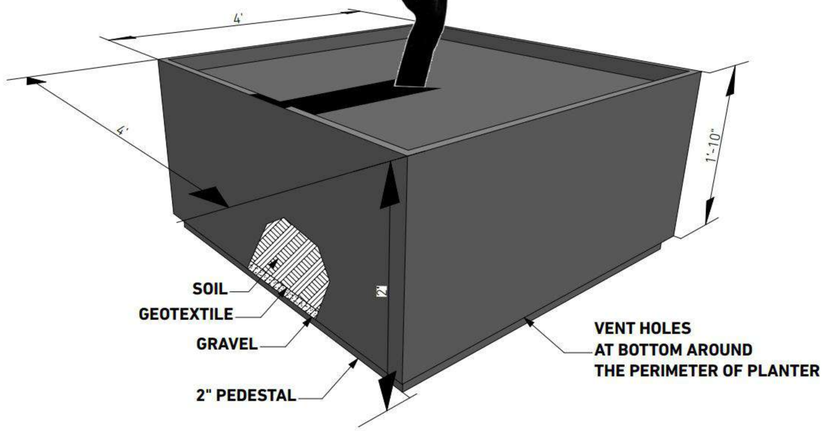

3D-15 JAPANESE MAPLE PLANTER 1:100

RECOMMENDED MATERIAL

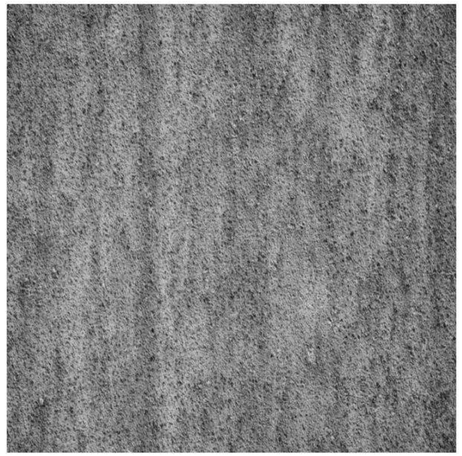

CORTEN OR WEATHERING STEEL

GIST RD. SFR 1

APN544-23-041; PROPOSED ADDRESS: 20555 GIST RD, LOS GATOS, CA 95033

REVISION HISTORY

S3DA Structural & Architectural Design
4196 Adams Ave. San Diego CA 92116
(619) 404-0220

Mr. Nader Moavenian
nader.m@s3da-design.com

STAMP

1. The contractor must check all dimensions on-site before commencing work

2. These drawings are to be read in conjunction with all relevant designer, engineer or specialist drawings and specifications

3. The contractor is responsible for providing all necessary temporary support to the building and any adjacent structures

COUNTY APPROVAL STAMP

REVISION DATE
01/02/2021

DRAWING NAME
052 Planters

Drawing Scale

L-5

CeCaL — Ceanothus California lilac - Ceanothus spp and cvs

BuDaW — Butterfly bush - Buddleja davidii 'White Profusion'

BuDaEl — Butterfly bush - Buddleja davidii 'Ellen's Blue'

AsFa — Narrow-leaved milkweed (Asclepias fascicularis)

AsSp — California showy milkweed (Asclepias speciosa

AcMi — Yarrow (Achilléa millefólium)

FeGlEl — Blue Fescue 'Eliah blue'- Festuca Glauca Eliah Blue

LiSp — Spike Gayfeather - Liatris Spicata

SoSpG — Solidago sphacelata 'Golden Fleece'

EcPuB — Echinacea Purpurea 'Bright star'

PeLa — Pentas lanceolata - Penta

ZinEl — Zinnia elegance - Dwarf zinnia

LoMa — Sweet Alyssum - Lobularia maritima

LonIn — Chaparral Honeysuckle - Lonicera interrupta

SalCoL — Salvia 'Lady in Red' - Salvia coccinea 'Lady in Red'

OphPiN — Black Mondo Grass

PhoTeR — New Zealand Flax

MuhCa — Pink Hair Grass

Lav — Lavender

Hos — Hosta

CORE LANDSCAPE PRODUCTS — CORE GRAVEL™ 50-30

GREEN LANDSCAPING ALTERNATIVES FOR A SUSTAINABLE FUTURE

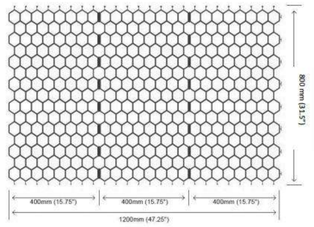

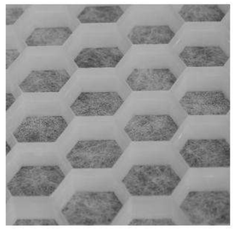

TECHNICAL SPECIFICATIONS

Material	Virgin polypropylene
Colour	White
Grid Dimension (in)	47.25" x 31.5" x 1.18" (1200mm x 800mm x 30mm)
Grid Weight (lbs)	3.5lbs/m2 (1.6kg/m2)
Cell Shape	Honeycomb
Cell Dimension(in)	2.0" x 1.2" x 0.05" (50mm x 30mm x 1.3mm)
Cell Wall Thickness	0.05" (1.3mm)
Crush Resistance (unfilled)	> 12 280 lbs/sq.ft. (60 tons/m²)
Load Bearing Capacity (filled)	> 30 720 lbs/sq.ft. (Over 150 tons/m²)
Temperature Range	-52°C to- +90°C
Chemical Resistance	Excellent
UV Resistance	Excellent
Suggested Aggregate Size (in)	0.2"-0.4"(5-10mm)

CERTIFICATES/COMPLIANT

AFNOR: NF EN ISO 844:2009 (determination of compressive properties).

SGS: ASTM D1621-04A (compressive test standard).

LEED: Used in SUDS and LEED compliant porous paving BMPs for ideal draining and minimal environmental impact.

ADA Compliant: Used in ADA disability compliant surfaces for pedestrians, bicycles, & wheelchair traffic.

Environmentally Approved: Maryland Department of the Environment, Montgomery County, and City of Victoria, British Columbia.

SUITABLE FOR

Residential camper, trailer, and car parking, patios and pathways, slope stabilization, etc.

Showcasing the strength of our grid:
youtube.com/watch?v=PBdXBigpj0g

Web: coregravel.ca
Email: info@coregravel.ca
Phone: 1 855 777 2673 (CORE)

LANDSCAPED AREAS

Landscaped area per plan	Area
Manzanita rockery	167 ft2
Butterfly garden	395 ft2
Colibri garden	272 ft2
Grass hill	384 ft2
Camellia terrace	608 ft2
Hostas bed	66 ft2
Total	1892 ft2

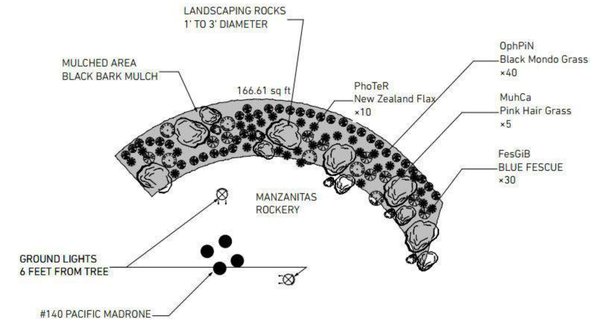

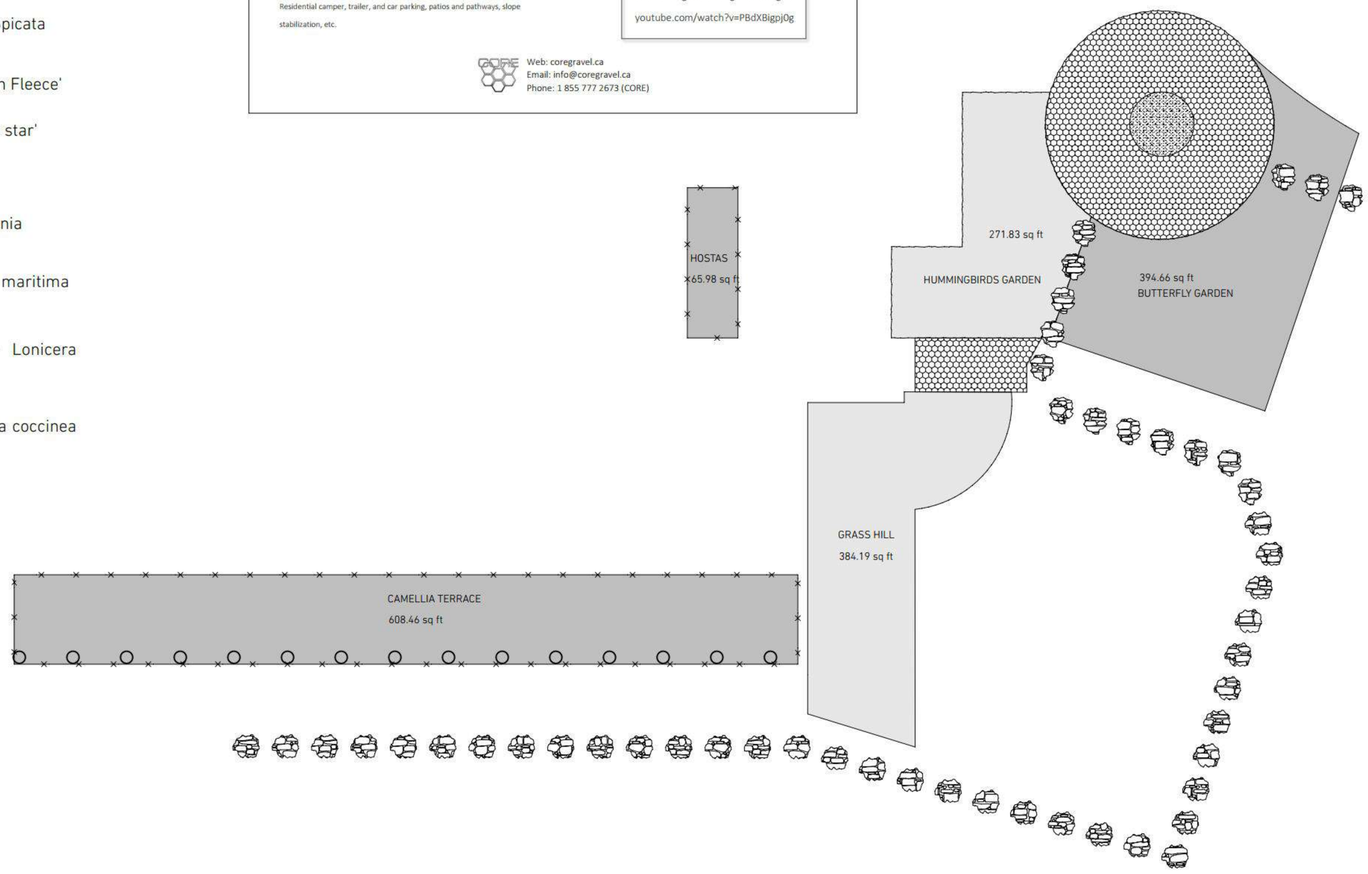

N

GIST RD. SFR 1

APN544-23-041; PROPOSED ADDRESS: 20555 GIST RD, LOS GATOS, CA 95033

REVISION HISTORY

S3DA Structural & Architectural Design
4196 Adams Ave. San Diego CA 92116
(619) 404-0220
Mr. Nader Moavenian
nader.m@s3da-design.com

STAMP

1. The contractor must check all dimensions on-site before commencing work

2. These drawings are to be read in conjunction with all relevant designer, engineer or specialist drawings and specifications

3. The contractor is responsible for providing all necessary temporary support to the building and any adjacent structures

COUNTY APPROVAL STAMP

REVISION DATE
01/02/2021

DRAWING NAME
053 Landscaped areas

Drawing Scale
1:80

L-6

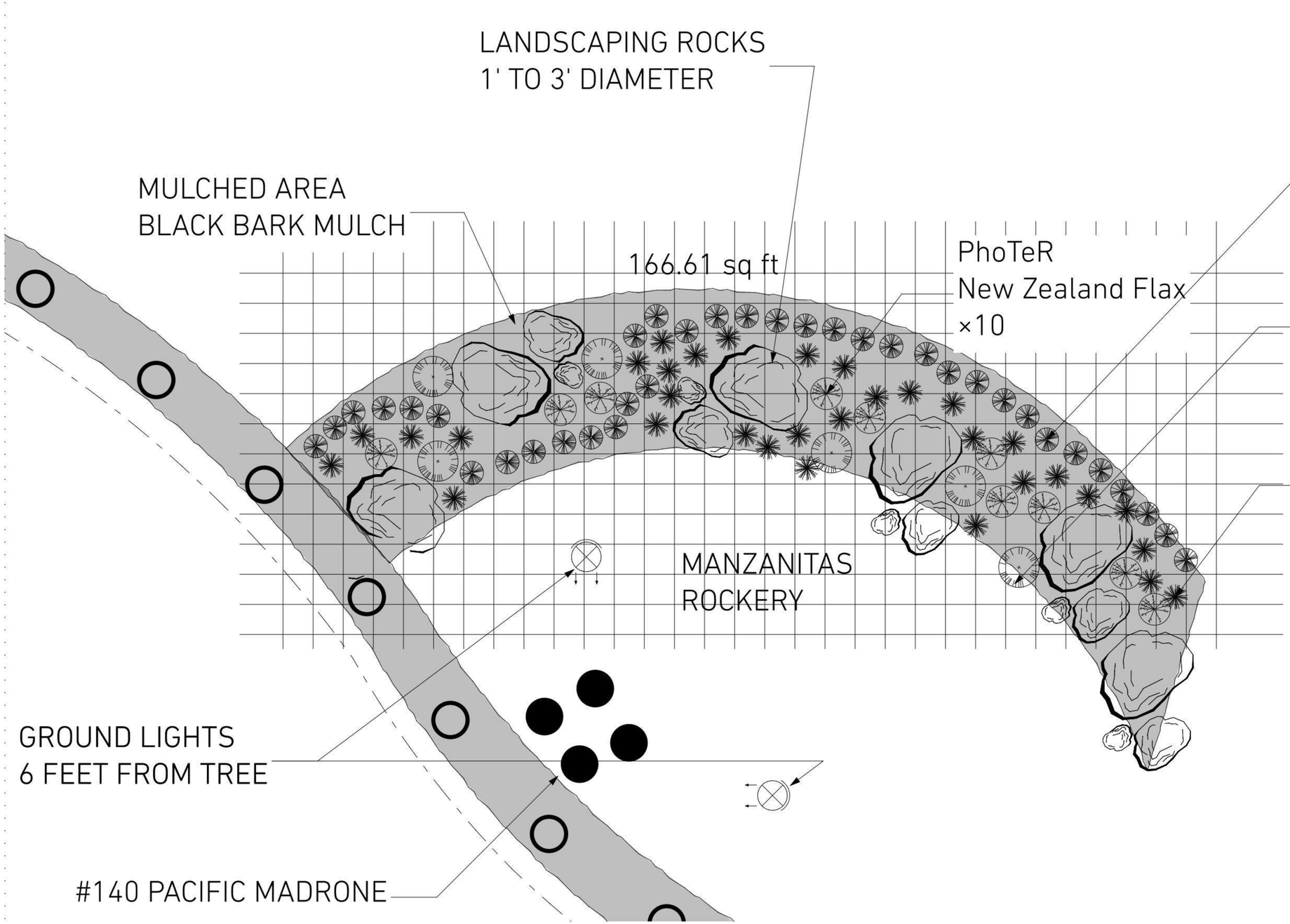

GIST RD. SFR 1

APN544-23-041; PROPOSED ADDRESS: 20555
GIST RD, LOS GATOS, CA 95033

REVISION HISTORY

S3DA Structural & Architectural Design
4196 Adams Ave. San Diego CA 92116
(619) 404-0220

Mr. Nader Moavenian
nader.m@s3da-design.com

STAMP

1. The contractor must check all dimensions on-site before commencing work

2. These drawings are to be read in conjunction with all relevant designer, engineer or specialist drawings and specifications

3. The contractor is responsible for providing all necessary temporary support to the building and any adjacent structures

COUNTY APPROVAL STAMP

REVISION DATE
01/02/2021

DRAWING NAME
054 Manzanitas rockery

Drawing Scale

L-7

PLACE **COREGRAVEL COREDRIVE**
PERMEABLE HONEYCOMB GRAVEL STABILIZER PANEL ON SURFACE. ATTACH TO SOIL WITH LANDSCAPING STAPLES. FILL WITH LIGHT GRAY GRAVEL

R 10'-8"

GARDEN BENCH

BIRD BATH OR FOUNTAIN

OphPiN
Black Mondo Grass
×125

AcMi
Yarrow
×22

FesGiB
BLUE FESCUE
×18

R 3'

271.83 sq ft

394.66 sq ft

ZinEl
Dwarf Zinnia
×40

EcPuB PeLa SalCoL LiSp SoSpG BuDaEl BuDaW LonIn CeCaL AsFa AsSp

GIST RD. SFR 1

APN544-23-041; PROPOSED ADDRESS: 20555 GIST RD, LOS GATOS, CA 95033

REVISION HISTORY

S3DA Structural & Architectural Design
4196 Adams Ave. San Diego CA 92116
(619) 404-0220

Mr. Nader Moavenian
nader.m@s3da-design.com

STAMP

1. The contractor must check all dimensions on-site before commencing work

2. These drawings are to be read in conjunction with all relevant designer, engineer or specialist drawings and specifications

3. The contractor is responsible for providing all necessary temporary support to the building and any adjacent structures

COUNTY APPROVAL STAMP

REVISION DATE
01/02/2021

DRAWING NAME
055 Butterfly garden

Drawing Scale

L-8

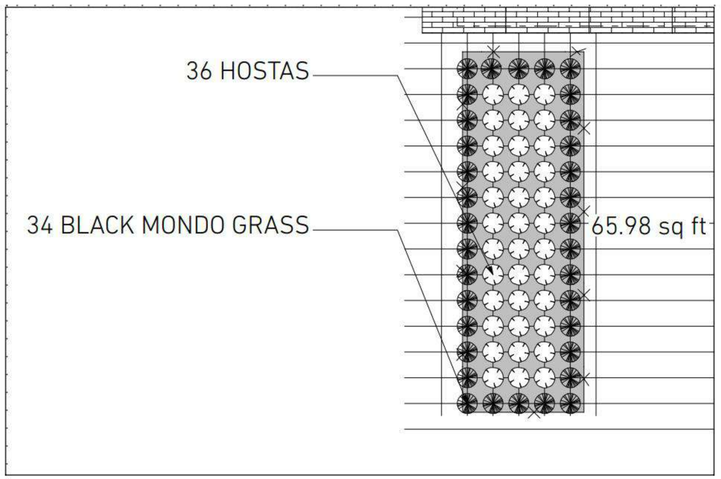

LW-5 HOSTAS 1:33.33

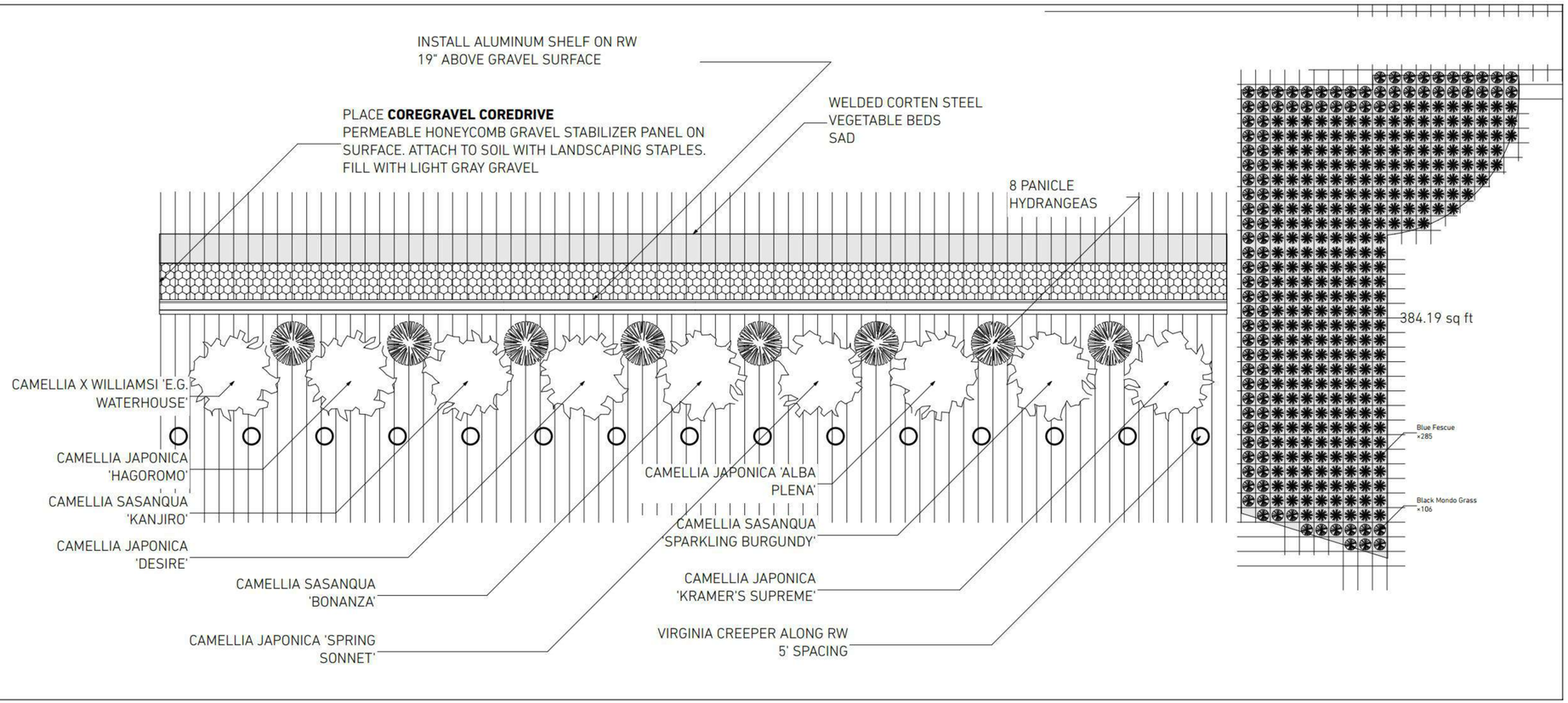

LW-5 CAMELIA TERRACE AND GRASS HILL 1:50

GIST RD. SFR 1

APN544-23-041; PROPOSED ADDRESS: 20555 GIST RD, LOS GATOS, CA 95033

REVISION HISTORY

S3DA Structural & Architectural Design
4196 Adams Ave. San Diego CA 92116
(619) 404-0220

Mr. Nader Moavenian
nader.m@s3da-design.com

STAMP

1. The contractor must check all dimensions on-site before commencing work

2. These drawings are to be read in conjunction with all relevant designer, engineer or specialist drawings and specifications

3. The contractor is responsible for providing all necessary temporary support to the building and any adjacent structures

COUNTY APPROVAL STAMP

REVISION DATE
01/02/2021

DRAWING NAME
056 Hostas, camellias, grasses

Drawing Scale

L-9

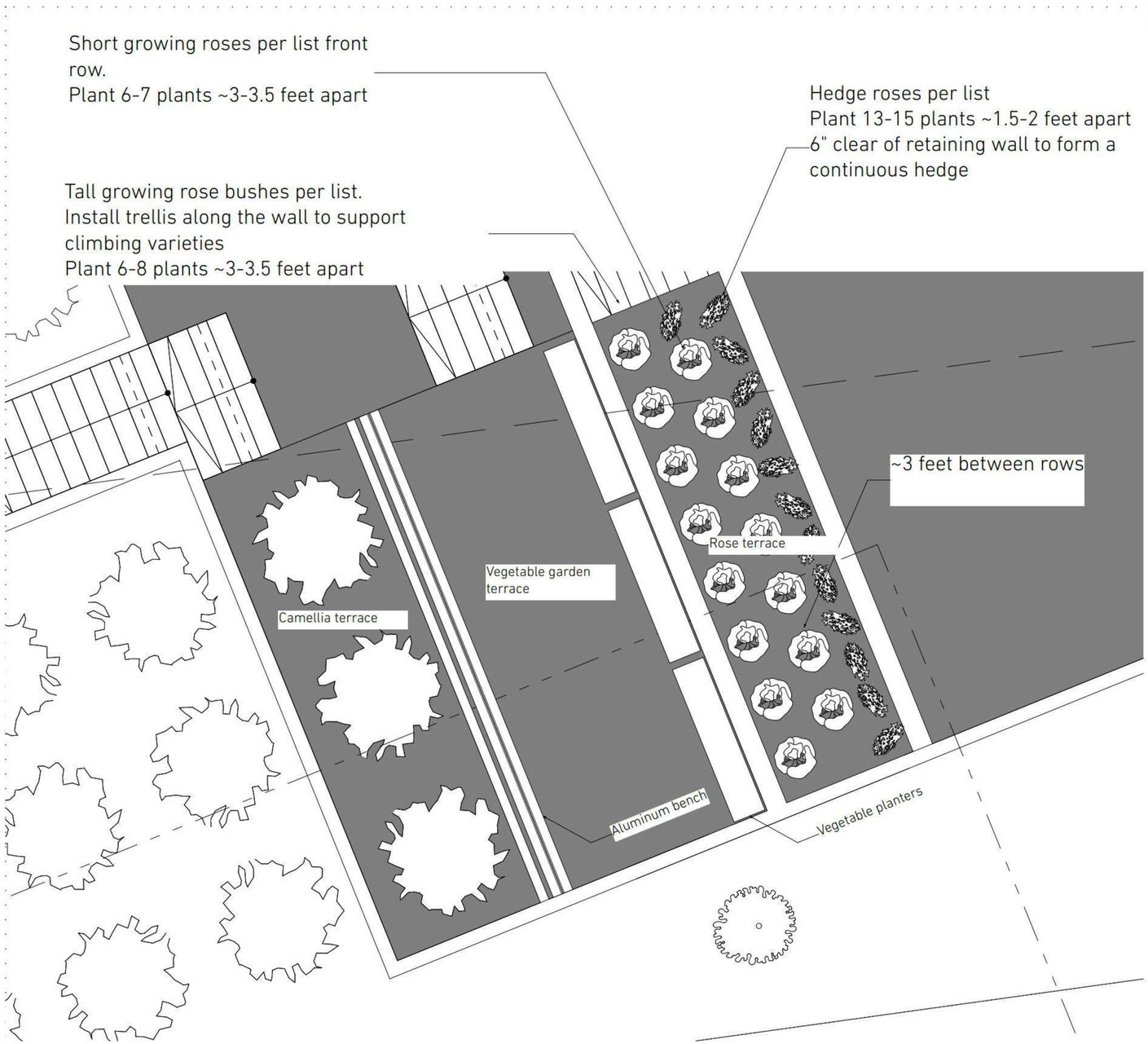

LONG & CLIMBING VARIETIES

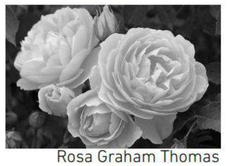
Rosa Graham Thomas

Cécile Brünner Rose

Lady Shalott Rose

Eden Rose

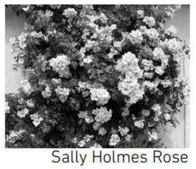
Sally Holmes Rose

Deja Blu Rose

SHORT VARIETIES

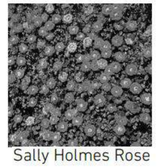
Sally Holmes Rose

Rosa Gourmet Popcorn

Italian Ice Rose

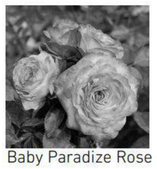
Baby Paradize Rose

Be my baby Rose

Life's Little Pleasures Rose

Candy Rose (Sunblaze Candy)

Pretty Polly Lavender Rose

Cinderella Rose

You're The One Rose

RECOMMENDED SHORT BUSH ROSE VARIETIES FOR THE ROSE GARDEN TERRACE

All a Twitter
Baby Paradise
Be My Baby
Candy
Cinderella
Deja Blu
Gourmet Popcorn
Italian Ice
Life's Little Pleasures
Pretty Polly Lavender
Sweet Drift
The Fairy
You're The One

Recommended edge row varieties. Plant several plants 2 feet apart to form hedge

Meibenbino (hedge forming, very low)
Cutie Pie ()

RECOMMENDED TALL GROWING & CLIMBING ROSE VARIETIES FOR THE ROSE GARDEN TERRACE

Cécile Brünner
Lady of Shalott
Sally Holmes
Memorial Day
Rosa Eden Climber
Rosa Graham Thomas

RECOMMENDED CAMELLIA VARIETIES FOR REPLACEMENT TREES

See Tree replacement plan for details

HEDGE ROW ROSES

Cutie Pie Rose Edging

Meibenbino

GIST RD. SFR 2

APN544-23-042; PROPOSED ADDRESS: 20599
GIST RD, LOS GATOS, CA 95033

REVISION HISTORY

S3DA Structural & Architectural Design
4196 Adams Ave. San Diego CA 92116
(619) 404-0220

Mr. Nader Moavenian
nader.m@s3da-design.com

2-11-2020

1. The contractor must check all dimensions on-site before commencing work

2. These drawings are to be read in conjunction with all relevant designer, engineer or specialist drawings and specifications

3. The contractor is responsible for providing all necessary temporary support to the building and any adjacent structures

COUNTY APPROVAL STAMP

REVISION DATE
01/02/21

DRAWING NAME
057 SFR2. Terraces

Drawing Scale

L-10

OAK FOREST RAILING PANELS

DESIGN OF THESE RAILINGS IS EXCLUSIVE FOR THE GIST RD PROPERTIES IN LOS GATOS, CA. THIS WORK WAS INSPIRED BY JOHN STEINBECK'S DESCRIPTIONS OF LOCAL CALIFORNIA FOREST LANDSCAPES. MR. STEINBECK USED TO LIVE ON BRUSH ROAD, ONLY FOUR MILES FROM GIST RD PROPERTIES

"Now the trail skirted **a long side hill** densely protected by underbrush—**blackberry, manzanita and scrub oak** so thickly tangled that even the rabbits had to make little tunnels through it. The trail **forced its way up** the long narrow ridge and came to **a belt of trees, tan oak and live oak and white oak**."

– John Steinbeck

"To a God Unknown"

RAILING PANELS

BOLT-ON INSTALLATION
ON TOP OF C.M.U. RETAINING WALL

SIDE VIEW & SECTION

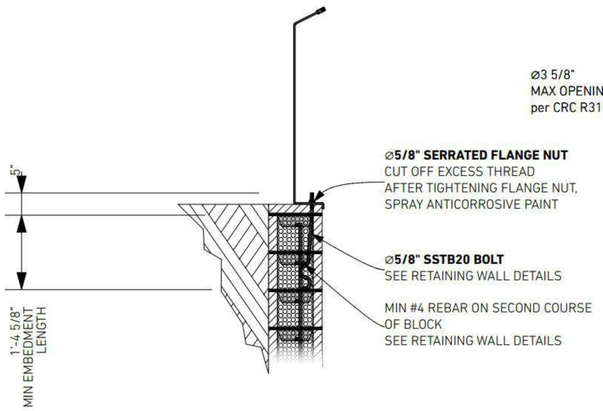

HORIZONTAL RAILING PANEL

DIMENSIONS & CONNECTION DETAILS

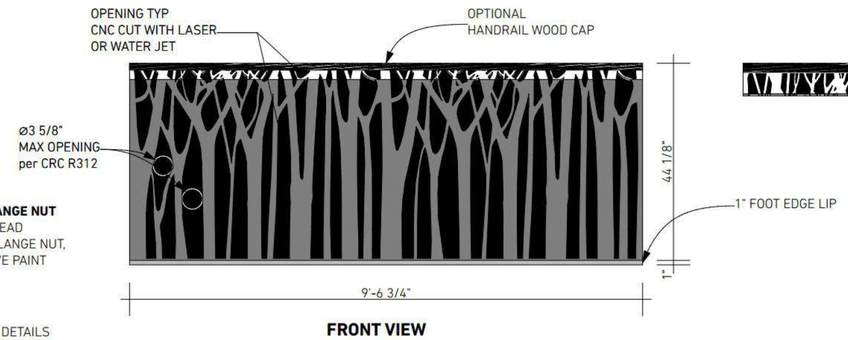

FRONT VIEW

TOP VIEW

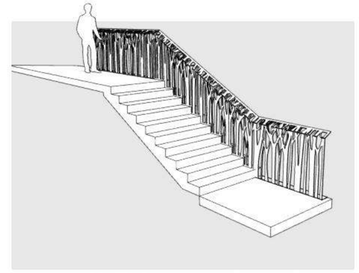

AXONOMETRIC VIEW 1:50

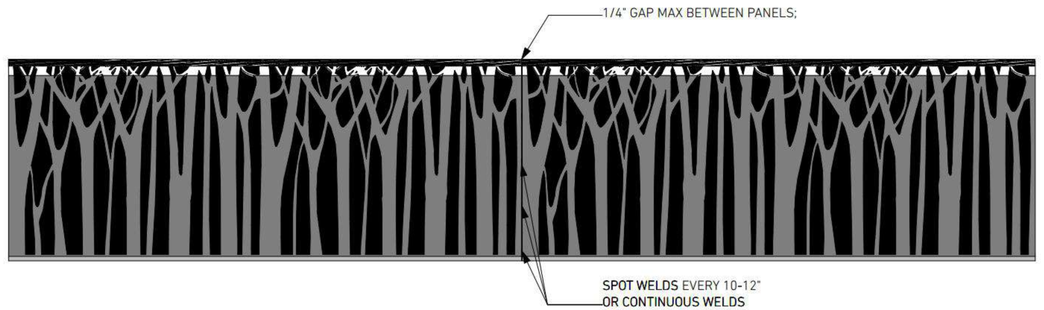

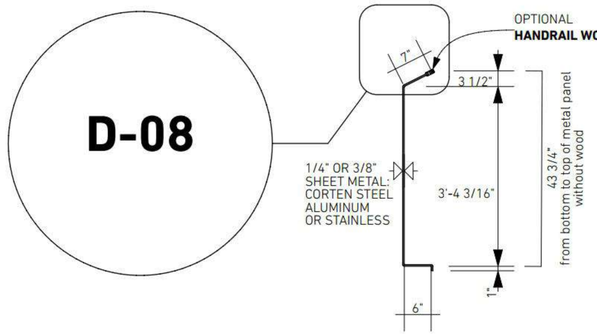

SLANTED RAILING PANEL

STEPS
DIMENSIONS & CONNECTION DETAILS

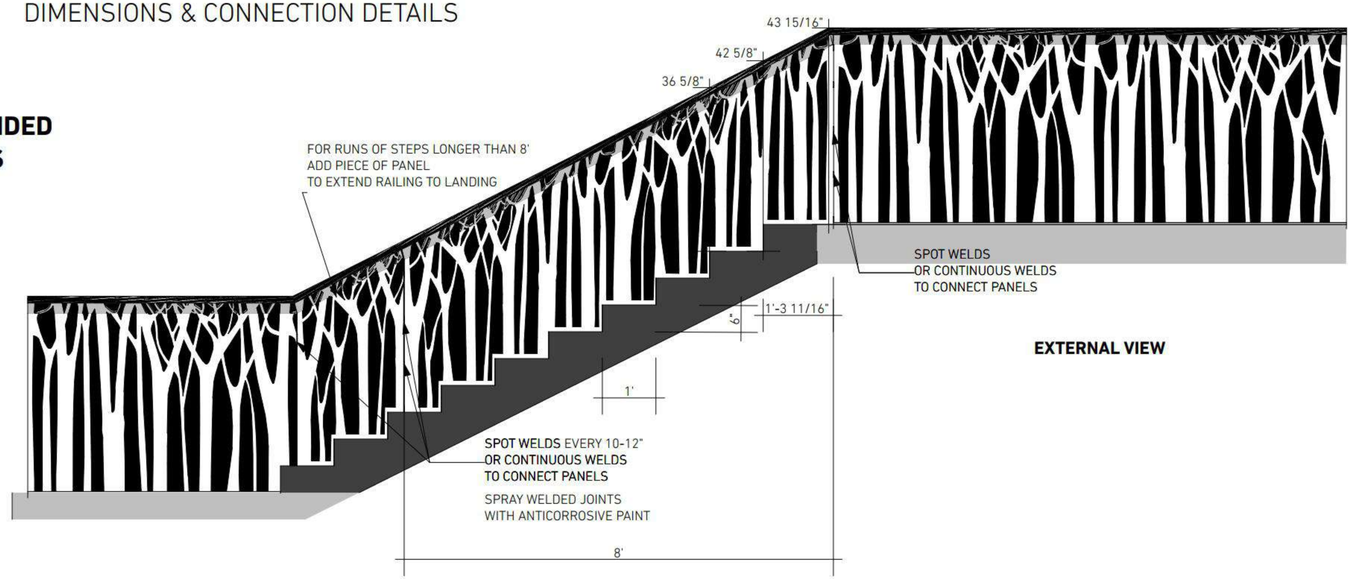

EXTERNAL VIEW

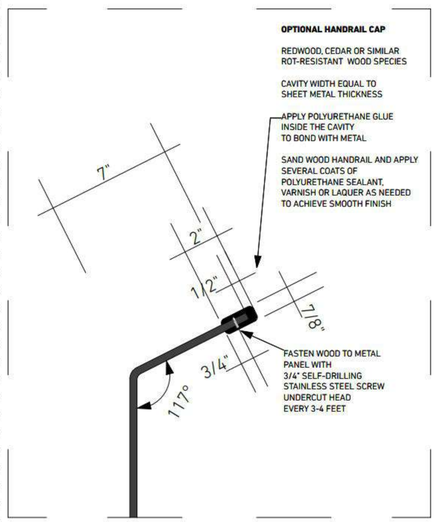

RECOMMENDED MATERIALS

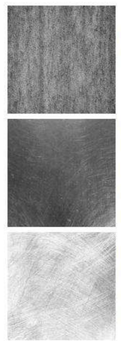

CORTEN OR WEATHERING STEEL

BLACK OR DARK BROWN BRUSHED ANODIZED INOX STEEL

BLACK OR DARK BROWN ANODIZED ALUMINUM

D-08 3" = 1'-0"

GIST RD. SFR 1

APN544-23-041; PROPOSED ADDRESS: 20555 GIST RD, LOS GATOS, CA 95033

REVISION HISTORY

S3DA Structural & Architectural Design
4196 Adams Ave. San Diego CA 92116
(619) 404-0220

Mr. Nader Moavenian
nader.m@s3da-design.com

REGISTERED PROFESSIONAL ENGINEER
GARRETT C. GROOM
C 057186
Exp. 12-31-2021
CIVIL
STATE OF CALIFORNIA

2-11-2020

1. The contractor must check all dimensions on-site before commencing work

2. These drawings are to be read in conjunction with all relevant designer, engineer or specialist drawings and specifications

3. The contractor is responsible for providing all necessary temporary support to the building and any adjacent structures

COUNTY APPROVAL STAMP

REVISION DATE
02/11/2020

DRAWING NAME
058 Oak Forest railing panels

Drawing Scale
3/4" = 1'-0"

L-D-1

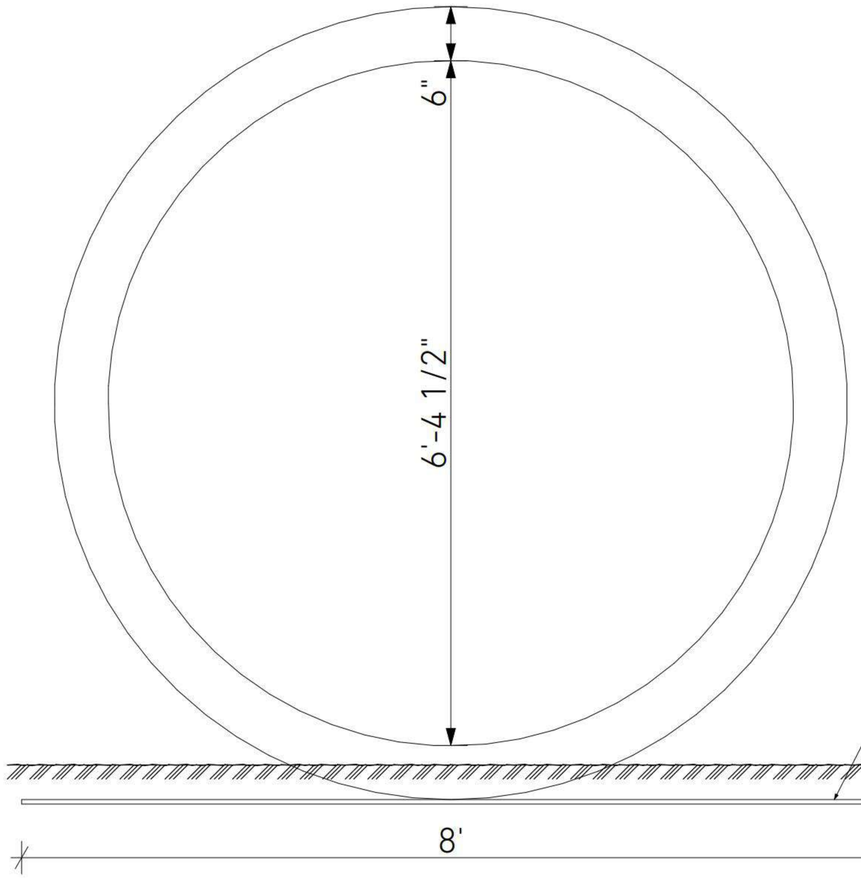

Moon Gate. Front View

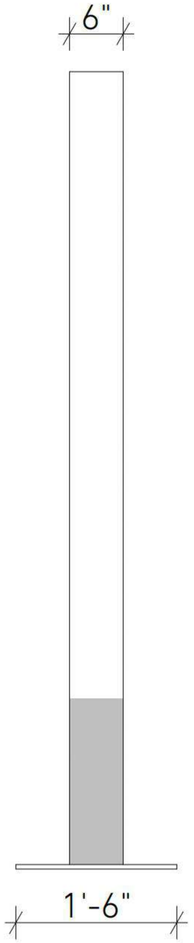

Moon Gate. Side view

NOTES:
THE MOON GATE STRUCTURE TO BE MANUFACTURED OUT OF MIN 3MM METAL, PREFERABLY CORTEN STEEL OR COPPER THAT WILL OXIDIZE WITH TIME TO GAIN NATURAL WEATHERED LOOK.

METAL PARTS TO BE THERMALLY JOINED: SOLDERED OR WELDED.

SECURE PEDESTAL PLATE TO GROUND WITH 2-FOOT SOIL NAILS. COVER AND CONCEAL PEDESTAL WITH 5 INCHES OF PAVEMENT STONES, SOIL MATERIAL, GRAVEL AND OR ROCKS AS APPROPRIATE FOR PROPOSED LANDSCAPING.

RECOMMENDED MATERIALS

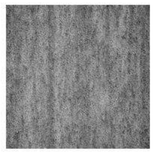

CORTEN OR WEATHERING STEEL

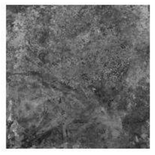

COPPER

GIST RD. SFR 1

APN544-23-041; PROPOSED ADDRESS: 20555 GIST RD, LOS GATOS, CA 95033

REVISION HISTORY

S3DA Structural & Architectural Design
4196 Adams Ave. San Diego CA 92116
(619) 404-0220

Mr. Nader Moavenian
nader.m@s3da-design.com

REGISTERED PROFESSIONAL ENGINEER
GARRETT CROOK
C 057186
Exp. 12-31-2021
CIVIL
STATE OF CALIFORNIA

2-11-2020

1. The contractor must check all dimensions on-site before commencing work

2. These drawings are to be read in conjunction with all relevant designer, engineer or specialist drawings and specifications

3. The contractor is responsible for providing all necessary temporary support to the building and any adjacent structures

COUNTY APPROVAL STAMP

REVISION DATE
02/11/2020

DRAWING NAME
059 Moon Gate details

Drawing Scale

L-D-2

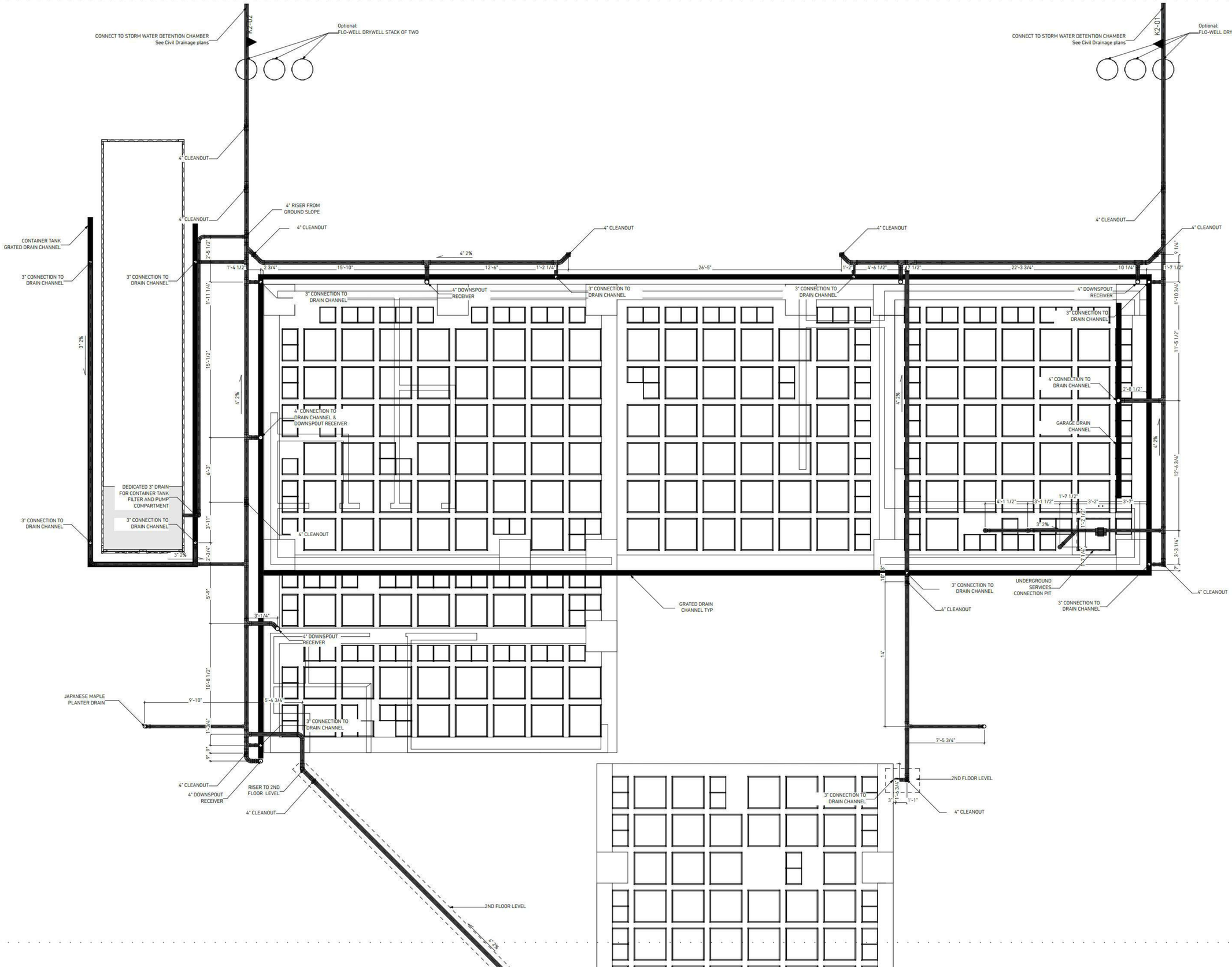

GIST RD. SFR 1

APN544-23-041; PROPOSED ADDRESS: 20555 GIST RD, LOS GATOS, CA 95033

REVISION HISTORY

S3DA Structural & Architectural Design
4196 Adams Ave. San Diego CA 92116
(619) 404-0220

Mr. Nader Moavenian
nader.m@s3da-design.com

REGISTERED PROFESSIONAL ENGINEER
BARRETT CROCKETT
C 057196
Exp. 12-31-2021
CIVIL
STATE OF CALIFORNIA

2-11-2020

1. The contractor must check all dimensions on-site before commencing work

2. These drawings are to be read in conjunction with all relevant designer, engineer or specialist drawings and specifications

3. The contractor is responsible for providing all necessary temporary support to the building and any adjacent structures

COUNTY APPROVAL STAMP

REVISION DATE
02/11/2020

DRAWING NAME
060 Storm water collection system

Drawing Scale

MEP-01

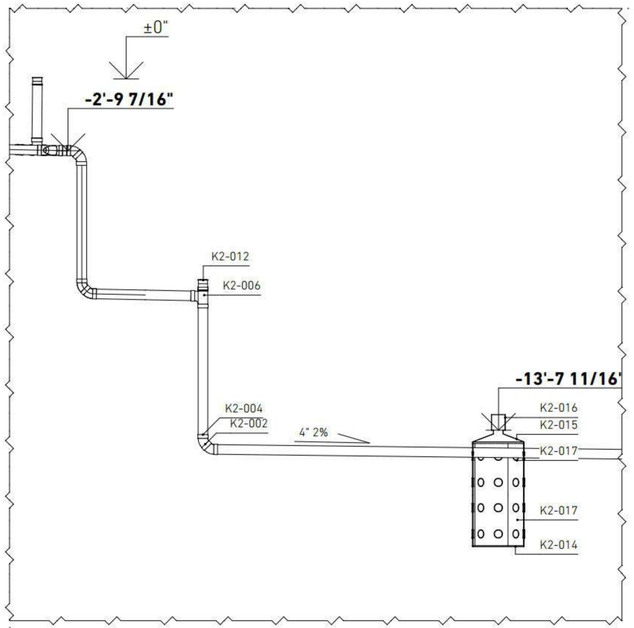

K2-01 CONNECTION TO FLO-WELL DRYWELLS 1:33.33

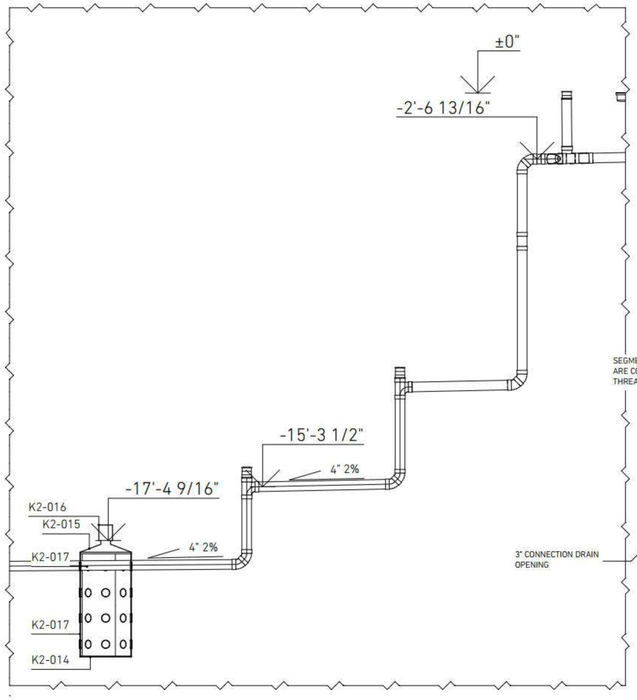

K2-02 CONNECTION TO FLO-WELL DRYWELLS 1:33.33

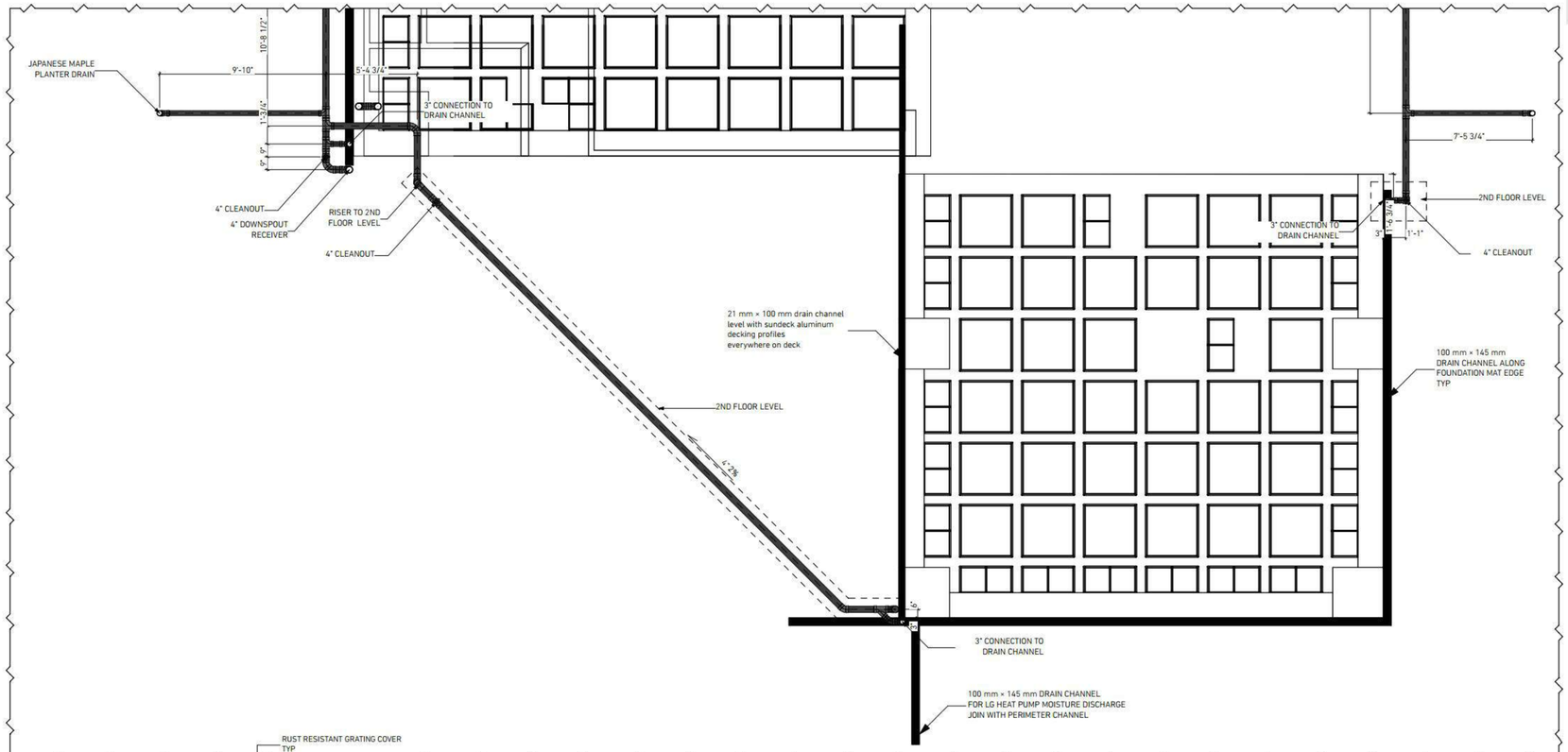

STORM DRAINAGE. SECOND FLOOR DETAIL 1/4" = 1'-0"

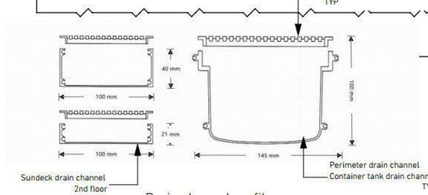

Drain channel profiles

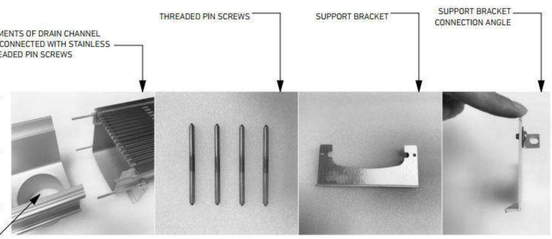

Drain channel accessories

Support bracket attachment

NOTE
SEAL JOINTS OF DRAIN CHANNELS WITH MASTIC OR ALTERNATIVELY TIG WELD ALUMINUM CHANNELS ALONG THE JOINTS TO CREATE WATERTIGHT CONNECTION.
USE RUST RESISTANT CHANNEL GRATING COVERS THROUGHOUT.

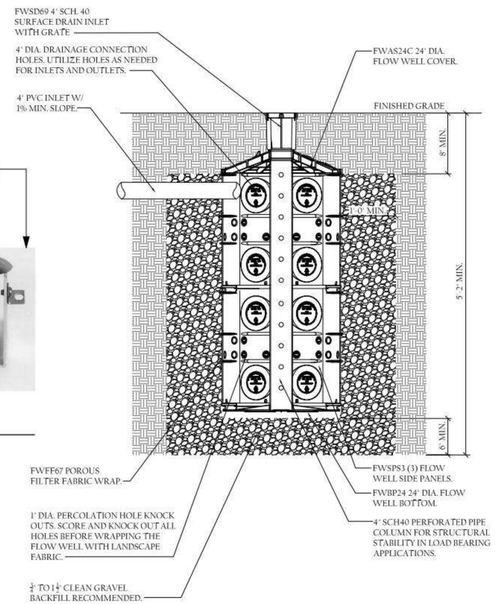

NOTE:

- MUST BE INSTALLED 10' AWAY FROM STRUCTURE OR FOUNDATION.
- FWAS24 KIT DOES NOT COME WITH FWPB24 BTM.
- REFERENCE FLO-WELL CALCULATOR ON NDSPRO.COM

NDS FLO-WELL™ GRAVEL INSTALLATION.
LIGHT VEHICULAR LOAD 'A' & 'B' INSTALLATION STACKED. N.T.S.

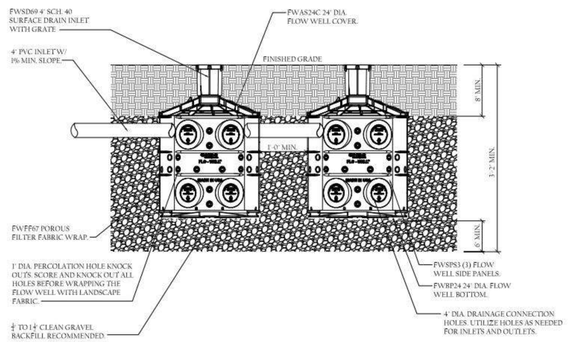

NOTE:

- MUST BE INSTALLED 10' AWAY FROM STRUCTURE OR FOUNDATION.
- FWAS24 KIT DOES NOT COME WITH FWPB24 BTM.
- REFERENCE FLO-WELL CALCULATOR ON NDSPRO.COM

NDS FLO-WELL™ GRAVEL INSTALLATION.
NON 'LOAD' BEARING' INSTALLATION LATERAL CONNECTION : N.T.S.

GIST RD. SFR 1

APN544-23-041; PROPOSED ADDRESS: 20555 GIST RD, LOS GATOS, CA 95033

REVISION HISTORY

S3DA Structural & Architectural Design
4196 Adams Ave. San Diego CA 92116
(619) 404-0220

Mr. Nader Moavenian
nader.m@s3da-design.com

REGISTERED PROFESSIONAL ENGINEER
BARRETT CROOK
C 057196
Exp. 12.31.2021
CIVIL
STATE OF CALIFORNIA
2-11-2020

1. The contractor must check all dimensions on-site before commencing work
2. These drawings are to be read in conjunction with all relevant designer, engineer or specialist drawings and specifications
3. The contractor is responsible for providing all necessary temporary support to the building and any adjacent structures

COUNTY APPROVAL STAMP

REVISION DATE
02/11/2020

DRAWING NAME
061 Storm water system. Detail

Drawing Scale
1/4" = 1'-0"

MEP-01.D

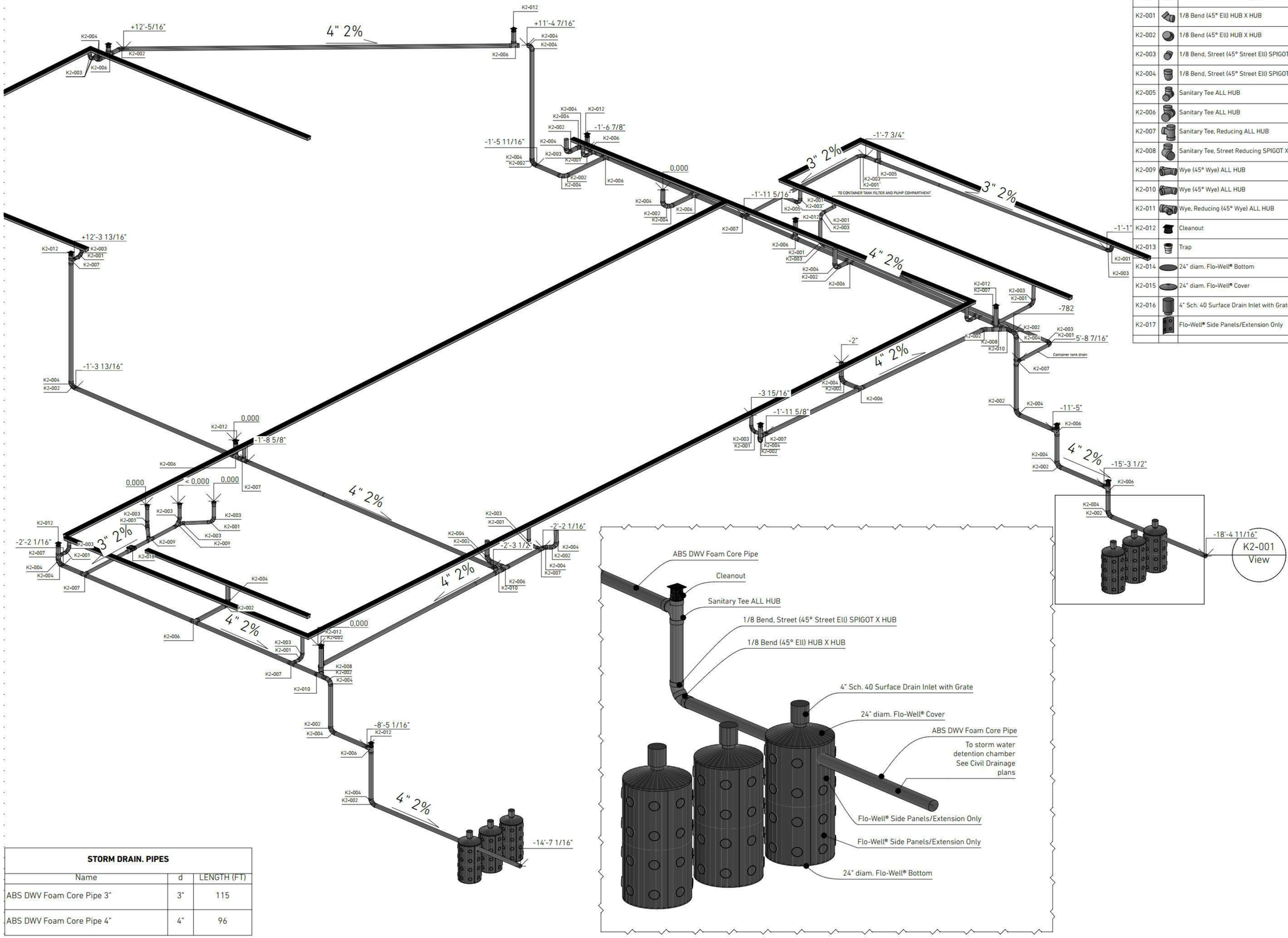

K2. RAIN DRAIN. FITTINGS						
ID	3D	Item	Dn1	Dn2	Dn3	Count
K2-001		1/8 Bend (45° Ell) HUB X HUB	3	3	---	16
K2-002		1/8 Bend (45° Ell) HUB X HUB	4	4	---	21
K2-003		1/8 Bend, Street (45° Street Ell) SPIGOT X HUB	3	3	---	21
K2-004		1/8 Bend, Street (45° Street Ell) SPIGOT X HUB	4	4	---	30
K2-005		Sanitary Tee ALL HUB	3	3	3	2
K2-006		Sanitary Tee ALL HUB	4	4	4	14
K2-007		Sanitary Tee, Reducing ALL HUB	4	4	3	12
K2-008		Sanitary Tee, Street Reducing SPIGOT X HUB X HUB	4	4	4	2
K2-009		Wye (45° Wye) ALL HUB	3	3	3	2
K2-010		Wye (45° Wye) ALL HUB	4	4	4	3
K2-011		Wye, Reducing (45° Wye) ALL HUB	4	4	3	1
K2-012		Cleanout	4	---	---	14
K2-013		Trap	3	---	---	3
K2-014		24" diam. Flo-Well® Bottom	---	---	---	6
K2-015		24" diam. Flo-Well® Cover	---	---	---	6
K2-016		4" Sch. 40 Surface Drain Inlet with Grate	---	---	---	6
K2-017		Flo-Well® Side Panels/Extension Only	---	---	---	48
						207

STORM DRAIN. PIPES		
Name	d	LENGTH (FT)
ABS DWV Foam Core Pipe 3"	3"	115
ABS DWV Foam Core Pipe 4"	4"	96

K2-001 FLO-WELL DRYWELL DETAIL 3/4" = 1'-0"

GIST RD. SFR 1

APN544-23-041; PROPOSED ADDRESS: 20555 GIST RD, LOS GATOS, CA 95033

REVISION HISTORY

S3DA Structural & Architectural Design
4196 Adams Ave. San Diego CA 92116
(619) 404-0220

Mr. Nader Moavenian
nader.m@s3da-design.com

REGISTERED PROFESSIONAL ENGINEER
Barrett C Crook
C 057196
Ex: 12-31-202
CIVIL
STATE OF CALIFORNIA
2-11-2020

1. The contractor must check all dimensions on-site before commencing work

2. These drawings are to be read in conjunction with all relevant designer, engineer or specialist drawings and specifications

3. The contractor is responsible for providing all necessary temporary support to the building and any adjacent structures

COUNTY APPROVAL STAMP

REVISION DATE
02/11/2020

DRAWING NAME
062 Storm water collection system plan.

Drawing Scale
1/4" = 1'-0"

MEP-02

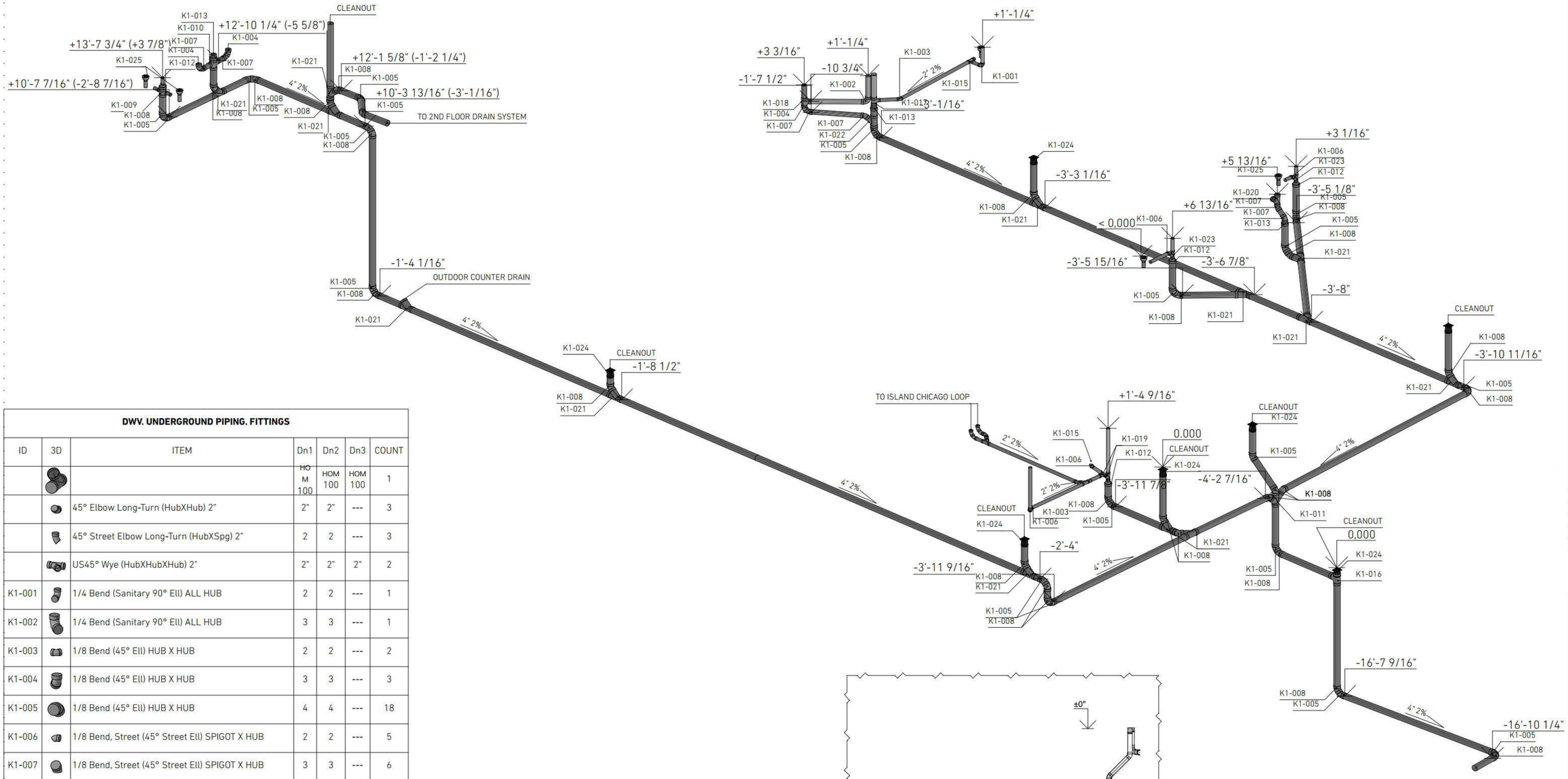

DWV. UNDERGROUND PIPING. FITTINGS						
ID	3D	ITEM	Dn1	Dn2	Dn3	COUNT
			HOM 100	HOM 100	HOM 100	1
		45° Elbow Long-Turn (HubXHub) 2"	2"	2"	---	3
		45° Street Elbow Long-Turn (HubXSpg) 2"	2	2	---	3
		US45° Wye (HubXHubXHub) 2"	2"	2"	2"	2
K1-001		1/4 Bend (Sanitary 90° Ell) ALL HUB	2	2	---	1
K1-002		1/4 Bend (Sanitary 90° Ell) ALL HUB	3	3	---	1
K1-003		1/8 Bend (45° Ell) HUB X HUB	2	2	---	2
K1-004		1/8 Bend (45° Ell) HUB X HUB	3	3	---	3
K1-005		1/8 Bend (45° Ell) HUB X HUB	4	4	---	18
K1-006		1/8 Bend, Street (45° Street Ell) SPIGOT X HUB	2	2	---	5
K1-007		1/8 Bend, Street (45° Street Ell) SPIGOT X HUB	3	3	---	6
K1-008		1/8 Bend, Street (45° Street Ell) SPIGOT X HUB	4	4	---	27
K1-009		Double Sanitary Tee, Reducing (Sanitary Cross) ALL HUB	4	4	2	1
K1-010		Double Sanitary Tee, Reducing (Sanitary Cross) ALL HUB	4	4	3	1
K1-011		Double Wye (Double 45° Wye) ALL HUB	4	4	4	1
K1-012		Pipe Increaser–Reducer HUB X HUB	2	4	---	4
K1-013		Pipe Increaser–Reducer HUB X HUB	3	4	---	3
K1-015		Sanitary Tee ALL HUB	2	2	2	1
K1-016		Sanitary Tee ALL HUB	4	4	4	1
K1-017		Sanitary Tee, Reducing ALL HUB	4	4	2	1
K1-018		Sanitary Tee, Street Reducing SPIGOT X HUB X HUB	3	3	3	1
K1-019		Wye (45° Wye) ALL HUB	2	2	2	2
K1-020		Wye (45° Wye) ALL HUB	3	3	3	1
K1-021		Wye (45° Wye) ALL HUB	4	4	4	12
K1-022		Wye Reducing (45° Wye) ALL HUB	4	4	3	1
K1-023		Wye, Street (45° Wye) SPIGOT X HUB X HUB	2	2	2	2
K1-024		CLEANOUT	4	---	---	7
K1-025		TRAP	2	---	---	5
						116

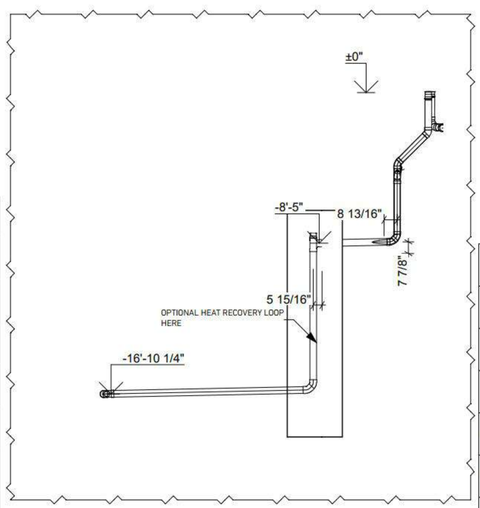

K1-01. Heat recovery loop location 1/4" = 1'-0"

DWV. UNDERGROUND PIPING			
ITEM	DIA	Name	LENGTH FT
ABS DWV Foam Core Pipe	2"	ABS DWV Foam Core Pipe 2"	49
ABS DWV Foam Core Pipe	3"	ABS DWV Foam Core Pipe 3"	13
ABS DWV Foam Core Pipe	4"	ABS DWV Foam Core Pipe 4"	210

GIST RD. SFR 1

APN544-23-041; PROPOSED ADDRESS: 20555 GIST RD, LOS GATOS, CA 95033

REVISION HISTORY

S3DA Structural & Architectural Design
4196 Adams Ave. San Diego CA 92116
(619) 404-0220

Mr. Nader Moavenian
nader.m@s3da-design.com

REGISTERED PROFESSIONAL ENGINEER
Barrett C Crook
C 057196
Exp. 12.31.2021
CIVIL
STATE OF CALIFORNIA

2-11-2020

1. The contractor must check all dimensions on-site before commencing work

2. These drawings are to be read in conjunction with all relevant designer, engineer or specialist drawings and specifications

3. The contractor is responsible for providing all necessary temporary support to the building and any adjacent structures

COUNTY APPROVAL STAMP

REVISION DATE
02/11/2020

DRAWING NAME
063 DWV. Waste water. underground. Axonometric view.

1/4" = 1'-0", 1:35.1" =

MEP-03

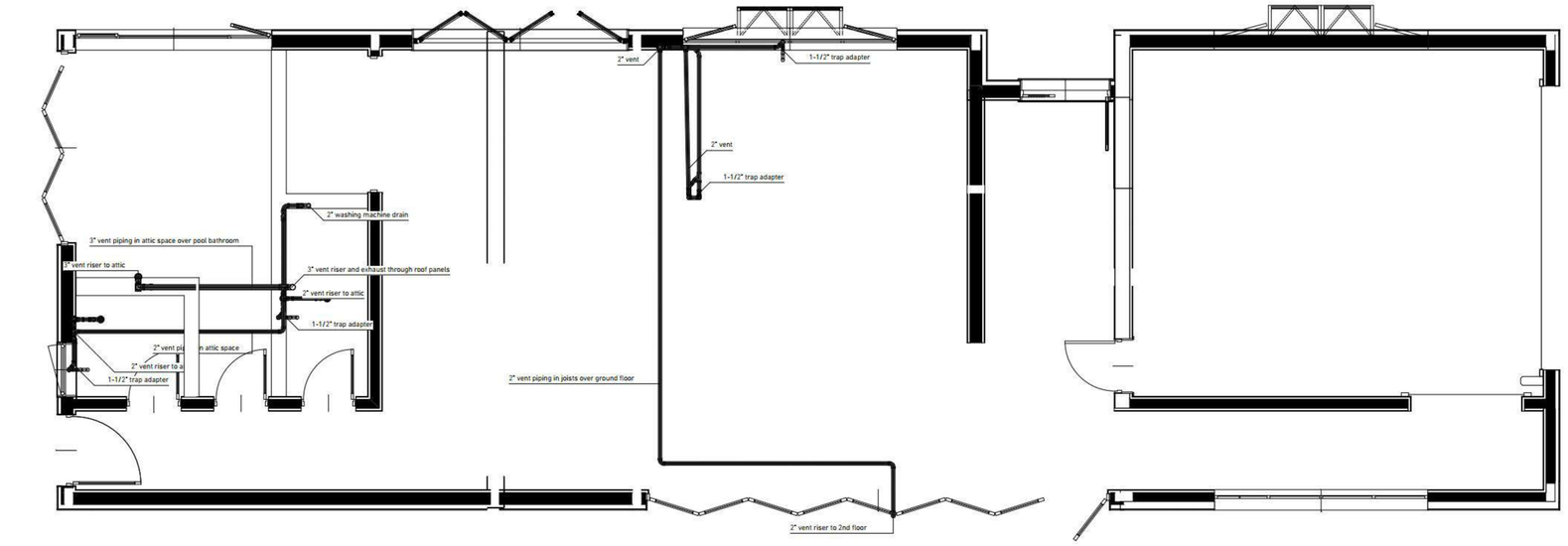

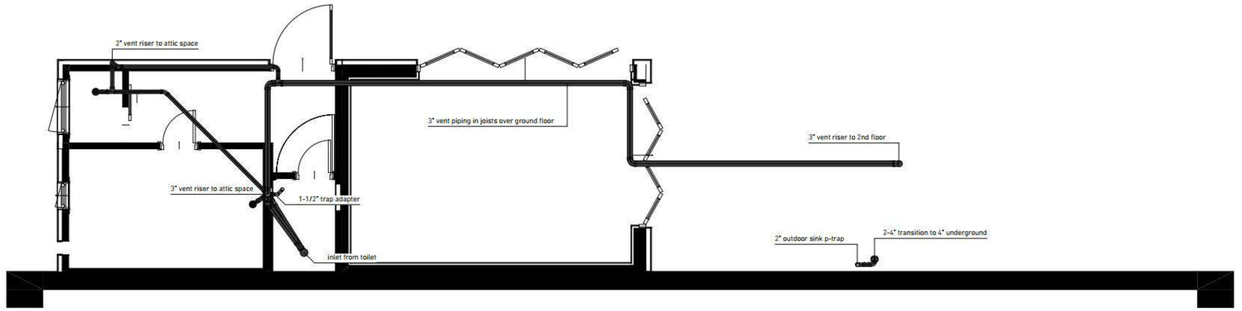

DWV. Waste water and vents Ground floor

GIST RD. SFR 1

APN544-23-041; PROPOSED ADDRESS: 20555 GIST RD, LOS GATOS, CA 95033

REVISION HISTORY

S3DA Structural & Architectural Design
4196 Adams Ave. San Diego CA 92116
(619) 404-0220

Mr. Nader Moavenian
nader.m@s3da-design.com

REGISTERED PROFESSIONAL ENGINEER
BARRETT CROOK
C 057196
Exp. 12.31.2021
CIVIL
STATE OF CALIFORNIA
2-11-2020

1. The contractor must check all dimensions on-site before commencing work

2. These drawings are to be read in conjunction with all relevant designer, engineer or specialist drawings and specifications

3. The contractor is responsible for providing all necessary temporary support to the building and any adjacent structures

COUNTY APPROVAL STAMP

REVISION DATE
02/11/2020

DRAWING NAME
064 DWV. Waste water. Internal plumbing plan. Ground floor

MEP-04

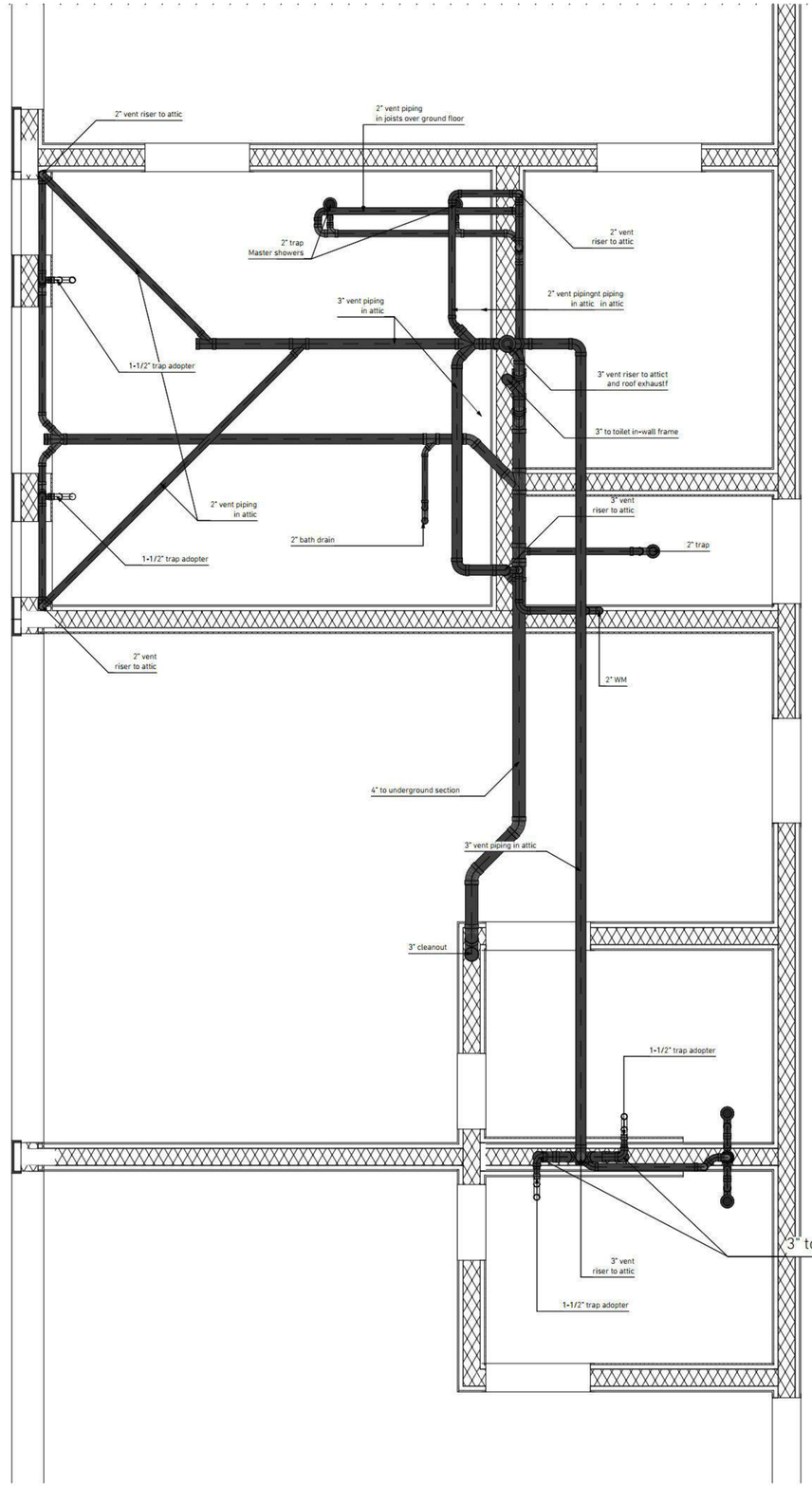

DWV. Waste water and vents 2nd floor

GIST RD. SFR 1

APN544-23-041; PROPOSED ADDRESS: 20555 GIST RD, LOS GATOS, CA 95033

REVISION HISTORY

S3DA Structural & Architectural Design
4196 Adams Ave. San Diego CA 92116
(619) 404-0220

Mr. Nader Moavenian
nader.m@s3da-design.com

REGISTERED PROFESSIONAL ENGINEER
BARRETT CROOK
C 067186
Exp. 12-31-2021
CIVIL
STATE OF CALIFORNIA

2-11-2020

1. The contractor must check all dimensions on-site before commencing work

2. These drawings are to be read in conjunction with all relevant designer, engineer or specialist drawings and specifications

3. The contractor is responsible for providing all necessary temporary support to the building and any adjacent structures

COUNTY APPROVAL STAMP

REVISION DATE
02/11/2020

DRAWING NAME
065 DWV. Waste water. Internal plumbing plan. 2nd floor

MEP-05

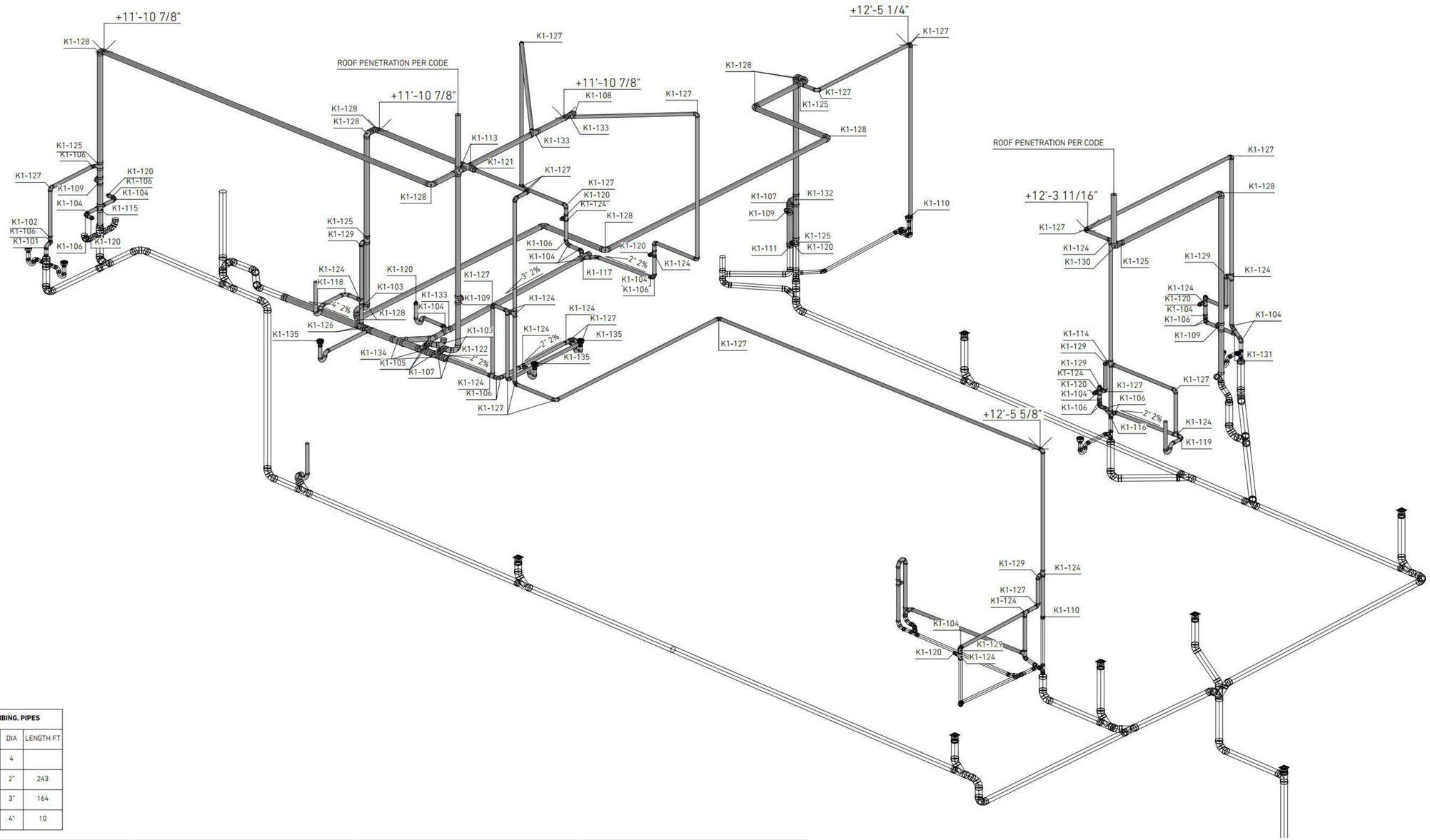

DWV. INTERNAL PLUMBING. PIPES		
SPECIFICATION	DIA	LENGTH FT
	4	
ABS DWV Foam Core Pipe 2"	2"	243
ABS DWV Foam Core Pipe 3"	3"	164
ABS DWV Foam Core Pipe 4"	4"	10

DWV. INTERNAL PLUMBING. FITTINGS

ID	3D	ITEM	Dn1	Dn2	Dn3	COUNT
		45° Street Elbow Long-Turn (HubXSpg) 2"	2	2	---	3
		90° Elbow Long-Turn (HubXHub) 2"	2	2	---	8
		90° Street Elbow Long-Turn (HubXSpg) 2"	2	2	---	8
		Reducing Coupling (Hub X Hub) 4x2"	114	2	---	1
		US Reducing Sanitary Tee (HubXHubXHub) 2x2x1 1/2"	2"	2"	1 1/2"	1
		US45° Wye (HubXHubXHub) 2"	2"	2"	2"	1
K1-015		Sanitary Tee ALL HUB	2	2	2	1
K1-101		1/4 Bend (Sanitary 90° Ell) ALL HUB	2	2	---	1
K1-102		1/4 Bend, Street (Sanitary 90° Street Ell) SPIGOT X HUB	2	2	---	1
K1-103		1/4 Bend, Street (Sanitary 90° Street Ell) SPIGOT X HUB	3	3	---	3
K1-104		1/8 Bend (45° Ell) HUB X HUB	2	2	---	14
K1-105		1/8 Bend (45° Ell) HUB X HUB	3	3	---	3

DWV. INTERNAL PLUMBING. FITTINGS

ID	3D	ITEM	Dn1	Dn2	Dn3	COUNT
K1-106		1/8 Bend, Street (45° Street Ell) SPIGOT X HUB	2	2	---	14
K1-107		1/8 Bend, Street (45° Street Ell) SPIGOT X HUB	3	3	---	3
K1-108		Cap socket	3		---	2
K1-109		Cleanout Tee with Cleanout Plug HUB X HUB X FPT	3	3	3	4
K1-110		Coupling HUB X HUB	2	2	---	2
K1-111		Coupling HUB X HUB	3	3	---	1
K1-112		Coupling HUB X HUB	4	4	---	1
K1-113		Double Fixture Fitting ALL HUB	3	3	3	2
K1-114		Double Sanitary Tee (Sanitary Cross) ALL HUB	2	2	2	1
K1-115		Double Sanitary Tee, Reducing (Sanitary Cross) ALL HUB	3	3	2	1
K1-116		Double Wye (Double 45° Wye) ALL HUB	2	2	2	1

DWV. INTERNAL PLUMBING. FITTINGS

ID	3D	ITEM	Dn1	Dn2	Dn3	COUNT
K1-117		Double Wye, Reducing (Double 45° Wye) ALL HUB	3	3	2	1
K1-118		Long Sweep 1/4 Bend HUB X HUB	2	2	---	1
K1-119		Long Sweep 1/4 Bend, Street HUB X SPIGOT	2	2	---	1
K1-120		Male Adapter MPT X HUB	2	1-1/2	---	9
K1-121		Pipe Increaser-Reducer HUB X HUB	2	3	---	1
K1-122		Pipe Increaser-Reducer HUB X HUB	2	4	---	1
K1-124		Sanitary Tee ALL HUB	2	2	2	16
K1-125		Sanitary Tee, Reducing ALL HUB	3	3	2	5
K1-126		Sanitary Tee, Reducing ALL HUB	3	3	2	2
K1-127		Vent Ell (90° Short Turn Ell) HUB X HUB	2	2	---	26
K1-128		Vent Ell (90° Short Turn Ell) HUB X HUB	3	3	---	13

DWV. INTERNAL PLUMBING. FITTINGS

ID	3D	ITEM	Dn1	Dn2	Dn3	COUNT
K1-129		Vent Ell, Street (90° Short Turn Street Ell) HUB X SPIGOT	2	2	---	6
K1-130		Vent Ell, Street (90° Short Turn Street Ell) HUB X SPIGOT	3	3	---	1
K1-131		Wye (45° Wye) ALL HUB	2	2	2	1
K1-132		Wye (45° Wye) ALL HUB	3	3	3	1
K1-133		Wye, Reducing (45° Wye) ALL HUB	3	3	2	3
K1-134		Wye, Reducing (45° Wye) ALL HUB	4	4	3	3
K1-135		SANITARY TRAP		---	---	3
						171

GIST RD. SFR 1

APN544-23-041; PROPOSED ADDRESS: 20555 GIST RD, LOS GATOS, CA 95033

REVISION HISTORY

S3DA Structural & Architectural Design
4196 Adams Ave. San Diego CA 92116
(619) 404-0220

Mr. Nader Moavenian
nader.m@s3da-design.com

REGISTERED PROFESSIONAL ENGINEER
BARRETT CROOKHAM
C 057196
Exp. 12/31/2021
CIVIL
STATE OF CALIFORNIA

2-11-2020

1. The contractor must check all dimensions on-site before commencing work

2. These drawings are to be read in conjunction with all relevant designer, engineer or specialist drawings and specifications

3. The contractor is responsible for providing all necessary temporary support to the building and any adjacent structures

COUNTY APPROVAL STAMP

REVISION DATE
02/11/2020

DRAWING NAME
066 DWV. Waste water. Interior plumbing. Axonometry

SCALE
1:35.6" = 1'-0"

MEP-06

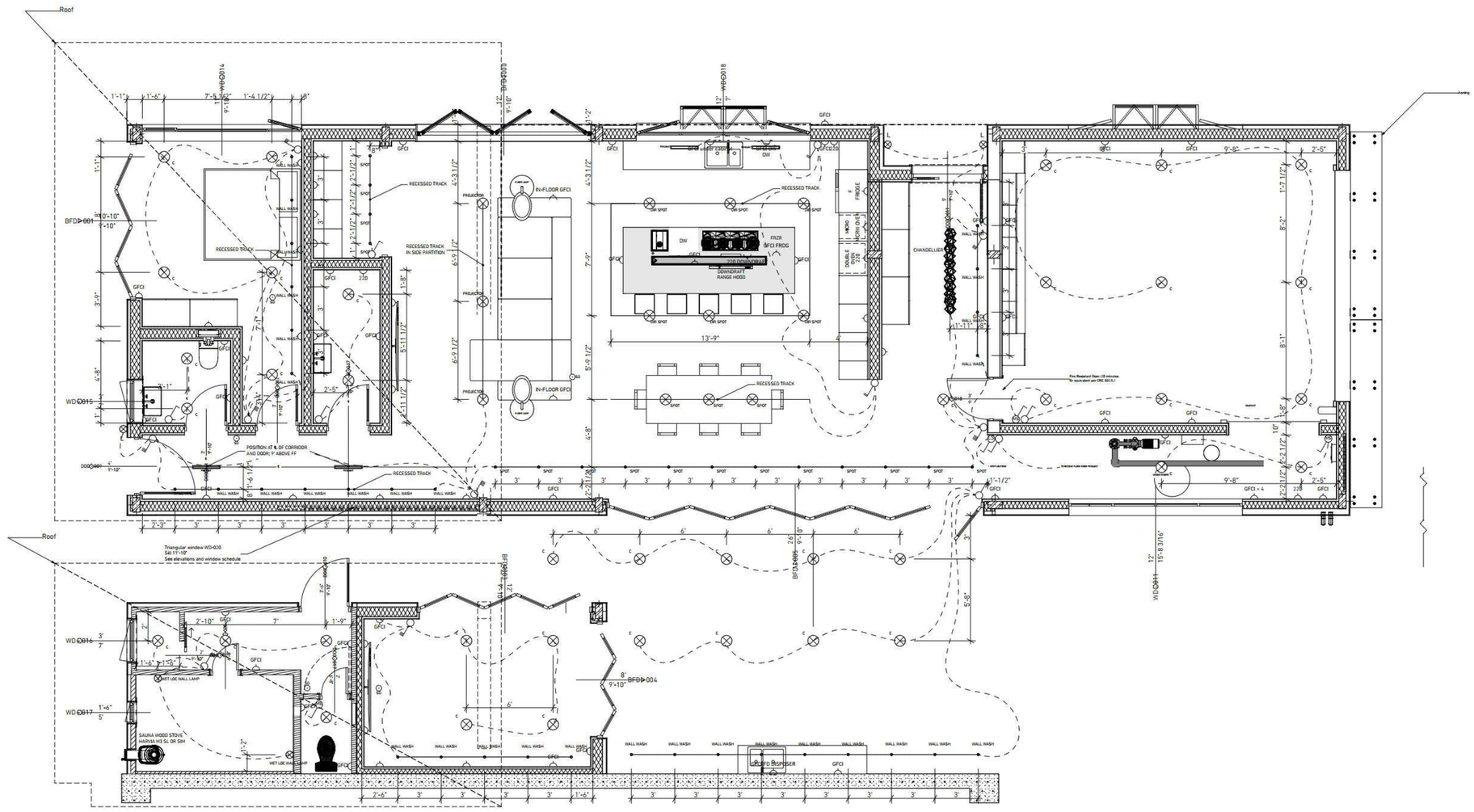

N

GIST RD. SFR 1

APN544-23-041; PROPOSED ADDRESS: 20555 GIST RD, LOS GATOS, CA 95033

REVISION HISTORY

S3DA Structural & Architectural Design
4196 Adams Ave. San Diego CA 92116
(619) 404-0220

Mr. Nader Moavenian
nader.m@s3da-design.com

REGISTERED PROFESSIONAL ENGINEER
BARRETT CROOK
C 057199
Exp. 12.31.2021
CIVIL
STATE OF CALIFORNIA

2-11-2020

1. The contractor must check all dimensions on-site before commencing work

2. These drawings are to be read in conjunction with all relevant designer, engineer or specialist drawings and specifications

3. The contractor is responsible for providing all necessary temporary support to the building and any adjacent structures

COUNTY APPROVAL STAMP

REVISION DATE
02/11/2020

DRAWING NAME
067 Interior electrical plan. Ground floor

Drawing Scale
1/4" = 1'-0"

MEP-27

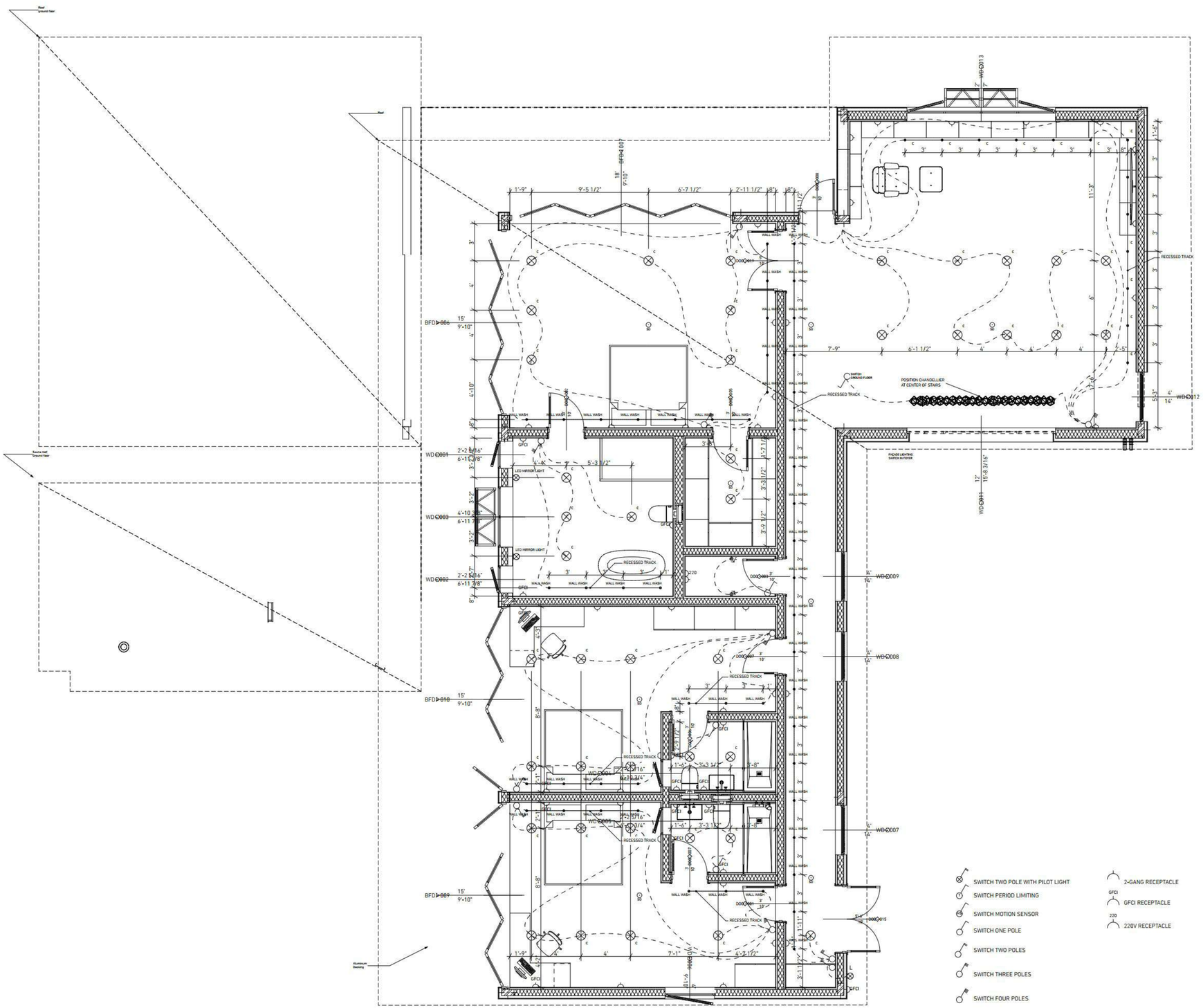

SWITCH TWO POLE WITH PILOT LIGHT
SWITCH PERIOD LIMITING
SWITCH MOTION SENSOR
SWITCH ONE POLE
SWITCH TWO POLES
SWITCH THREE POLES
SWITCH FOUR POLES
SWITCH TWO POLES WITH DIMMER
SMOKE & CO2 DETECTOR

2-GANG RECEPTACLE
GFCI RECEPTACLE
220V RECEPTACLE

GIST RD. SFR 1

APN544-23-041; PROPOSED ADDRESS: 20555 GIST RD, LOS GATOS, CA 95033

REVISION HISTORY

S3DA Structural & Architectural Design
4196 Adams Ave. San Diego CA 92116
(619) 404-0220

Mr. Nader Moavenian
nader.m@s3da-design.com

REGISTERED PROFESSIONAL ENGINEER
BARRETT CROOKE
C 057186
Exp. 12-31-202
CIVIL
STATE OF CALIFORNIA

2-11-2020

1. The contractor must check all dimensions on-site before commencing work

2. These drawings are to be read in conjunction with all relevant designer, engineer or specialist drawings and specifications

3. The contractor is responsible for providing all necessary temporary support to the building and any adjacent structures

COUNTY APPROVAL STAMP

REVISION DATE
02/11/2020

DRAWING NAME
068 Interior electrical plan. 2nd floor

Drawing Scale
1/4" = 1'-0"

MEP-28

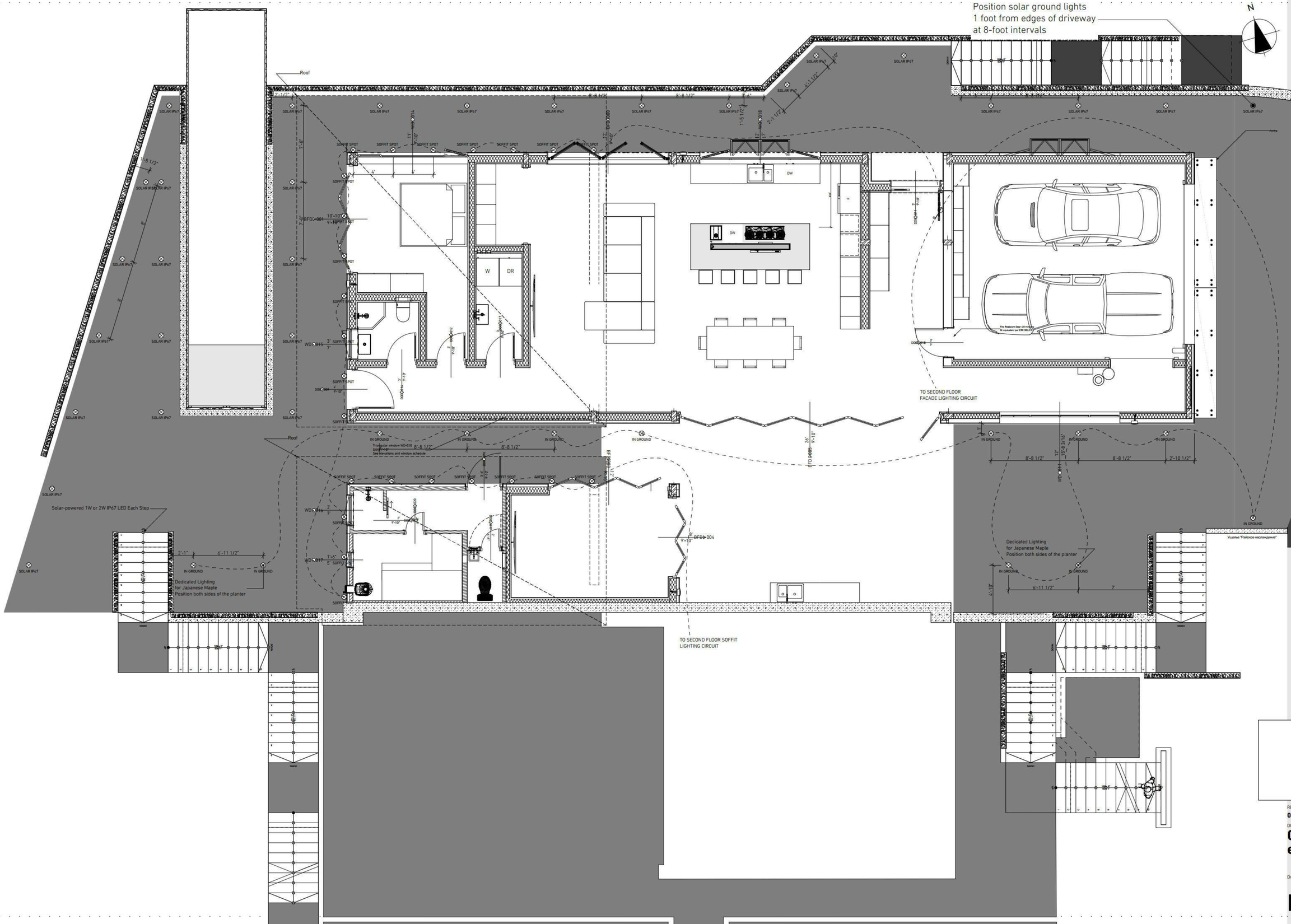

GIST RD. SFR 1

APN544-23-041; PROPOSED ADDRESS: 20555

GIST RD, LOS GATOS, CA 95033

REVISION HISTORY

S3DA Structural & Architectural Design
4196 Adams Ave. San Diego CA 92116
(619) 404-0220

Mr. Nader Moavenian
nader.m@s3da-design.com

REGISTERED PROFESSIONAL ENGINEER
BARRETT CROOK
C 057196
Exp. 12.31.2021
CIVIL
STATE OF CALIFORNIA

2-11-2020

1. The contractor must check all dimensions on-site before commencing work

2. These drawings are to be read in conjunction with all relevant designer, engineer or specialist drawings and specifications

3. The contractor is responsible for providing all necessary temporary support to the building and any adjacent structures

COUNTY APPROVAL STAMP

REVISION DATE
02/11/2020

DRAWING NAME
069 Exterior electrical plan

Drawing Scale

MEP-29

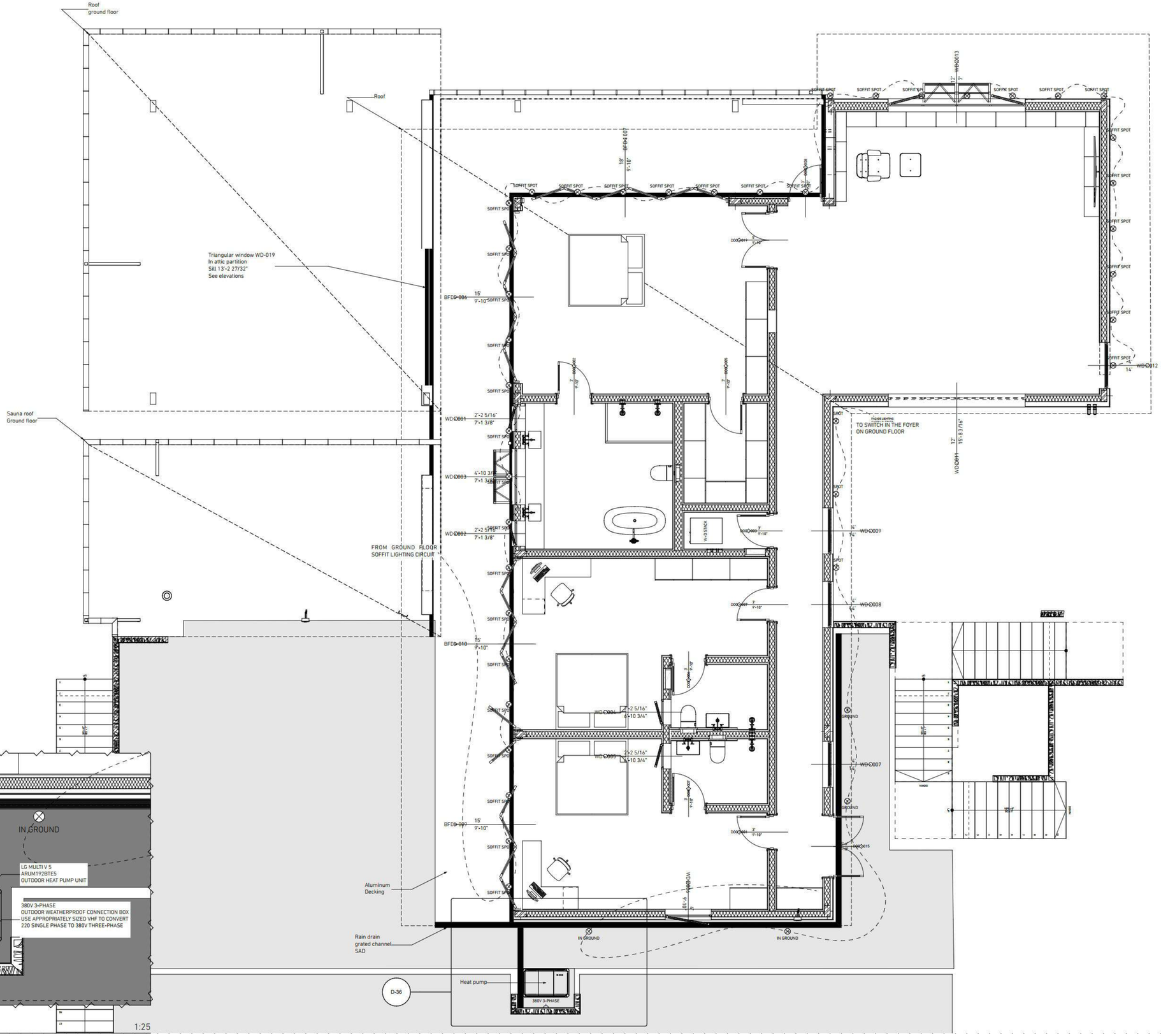

GIST RD. SFR 1

APN544-23-041; PROPOSED ADDRESS: 20555 GIST RD, LOS GATOS, CA 95033

REVISION HISTORY

S3DA Structural & Architectural Design
4196 Adams Ave. San Diego CA 92116
(619) 404-0220

Mr. Nader Moavenian
nader.m@s3da-design.com

REGISTERED PROFESSIONAL ENGINEER
GARRETT C. GROOM
C 057196
Exp. 12-31-2021
CIVIL
STATE OF CALIFORNIA

2-11-2020

1. The contractor must check all dimensions on-site before commencing work

2. These drawings are to be read in conjunction with all relevant designer, engineer or specialist drawings and specifications

3. The contractor is responsible for providing all necessary temporary support to the building and any adjacent structures

COUNTY APPROVAL STAMP

REVISION DATE
02/11/2020

DRAWING NAME
070 Exterior electrical plan. 2nd floor

Drawing Scale

MEP-30

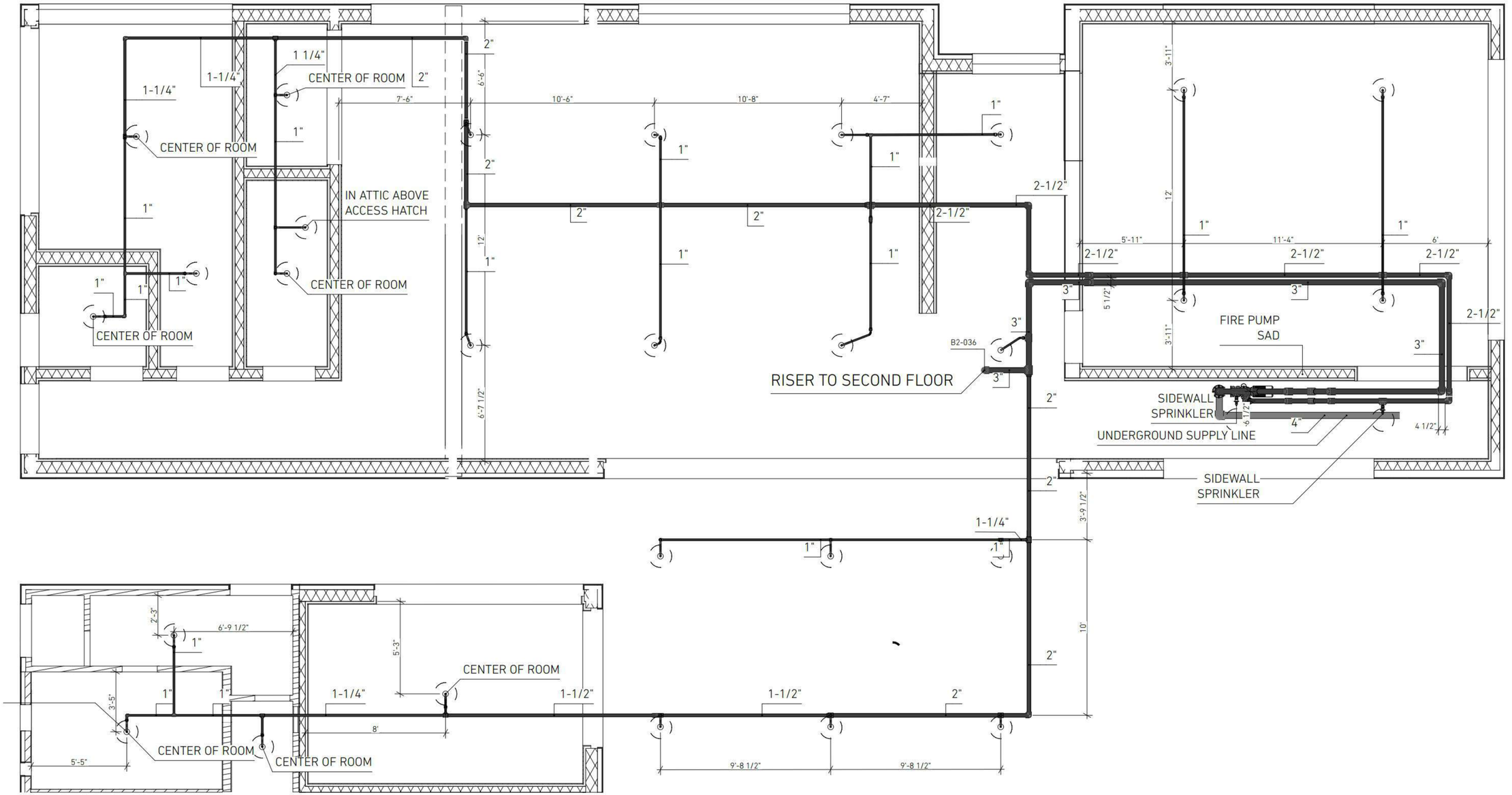

GIST RD. SFR 1

APN544-23-041; PROPOSED ADDRESS: 20555 GIST RD, LOS GATOS, CA 95033

REVISION HISTORY

S3DA Structural & Architectural Design
4196 Adams Ave. San Diego CA 92116
(619) 404-0220

Mr. Nader Moavenian
nader.m@s3da-design.com

REGISTERED PROFESSIONAL ENGINEER
GARRETT CROOK
C 057186
Exp. 12-31-202[illegible]
CIVIL
STATE OF CALIFORNIA

2-11-2020

1. The contractor must check all dimensions on-site before commencing work

2. These drawings are to be read in conjunction with all relevant designer, engineer or specialist drawings and specifications

3. The contractor is responsible for providing all necessary temporary support to the building and any adjacent structures

COUNTY APPROVAL STAMP

REVISION DATE
02/11/2020

DRAWING NAME
071 B2. Sprinkler system plan. Ground floor

Drawing Scale

MEP-07

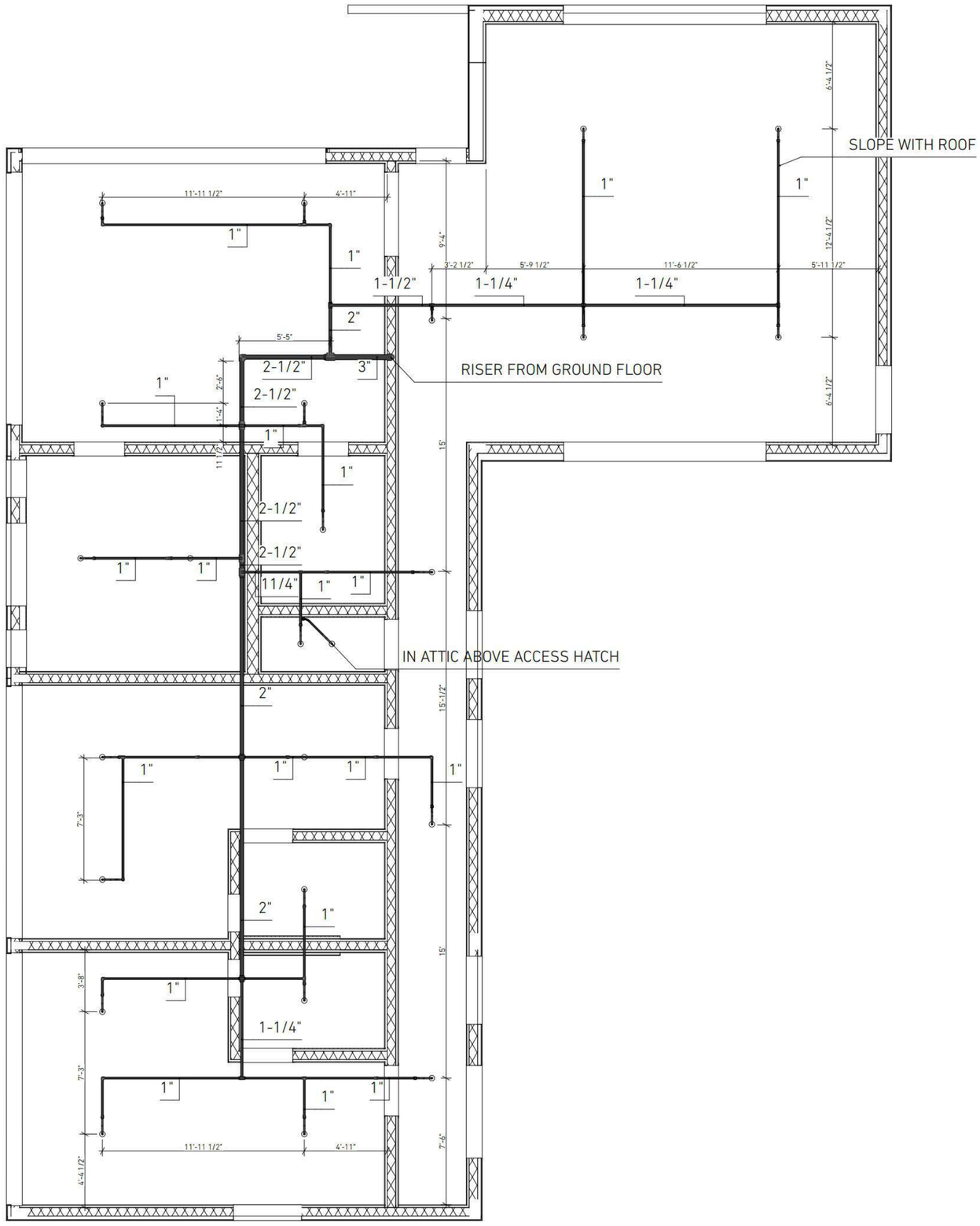

GIST RD. SFR 1

APN544-23-041; PROPOSED ADDRESS: 20555 GIST RD, LOS GATOS, CA 95033

REVISION HISTORY

S3DA Structural & Architectural Design
4196 Adams Ave. San Diego CA 92116
(619) 404-0220

Mr. Nader Moavenian
nader.m@s3da-design.com

REGISTERED PROFESSIONAL ENGINEER
BARRETT CROOK
C 057186
Exp. 12-31-2021
CIVIL
STATE OF CALIFORNIA

2-11-2020

1. The contractor must check all dimensions on-site before commencing work

2. These drawings are to be read in conjunction with all relevant designer, engineer or specialist drawings and specifications

3. The contractor is responsible for providing all necessary temporary support to the building and any adjacent structures

COUNTY APPROVAL STAMP

REVISION DATE
02/11/2020

DRAWING NAME
072 B2. Sprinkler system plan. 2nd floor

Drawing Scale

MEP-08

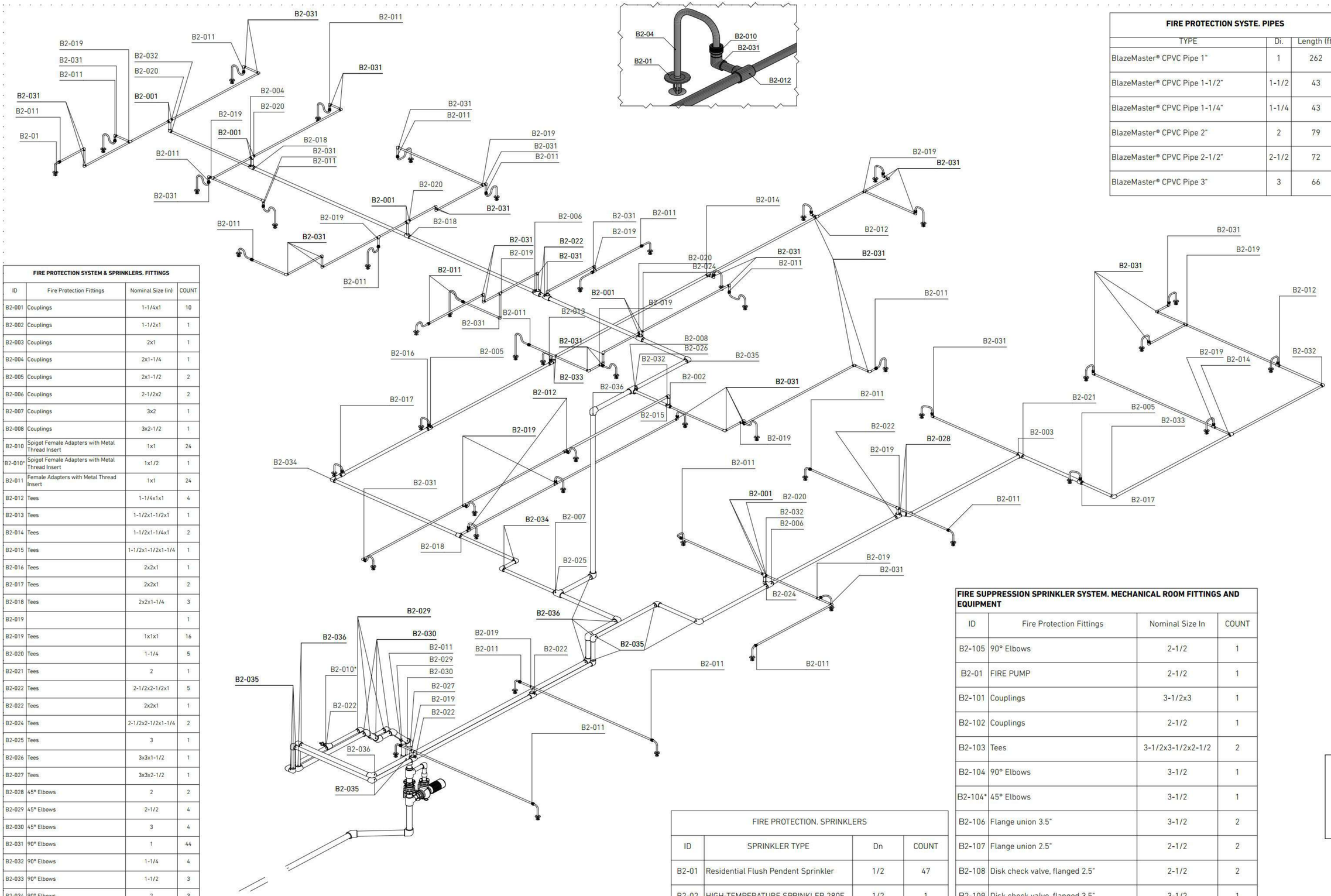

FIRE PROTECTION SYSTE. PIPES		
TYPE	Di.	Length (ft)
BlazeMaster® CPVC Pipe 1"	1	262
BlazeMaster® CPVC Pipe 1-1/2"	1-1/2	43
BlazeMaster® CPVC Pipe 1-1/4"	1-1/4	43
BlazeMaster® CPVC Pipe 2"	2	79
BlazeMaster® CPVC Pipe 2-1/2"	2-1/2	72
BlazeMaster® CPVC Pipe 3"	3	66

FIRE PROTECTION SYSTEM & SPRINKLERS. FITTINGS			
ID	Fire Protection Fittings	Nominal Size (in)	COUNT
B2-001	Couplings	1-1/4x1	10
B2-002	Couplings	1-1/2x1	1
B2-003	Couplings	2x1	1
B2-004	Couplings	2x1-1/4	1
B2-005	Couplings	2x1-1/2	2
B2-006	Couplings	2-1/2x2	2
B2-007	Couplings	3x2	1
B2-008	Couplings	3x2-1/2	1
B2-010	Spigot Female Adapters with Metal Thread Insert	1x1	24
B2-010*	Spigot Female Adapters with Metal Thread Insert	1x1/2	1
B2-011	Female Adapters with Metal Thread Insert	1x1	24
B2-012	Tees	1-1/4x1x1	4
B2-013	Tees	1-1/2x1-1/2x1	1
B2-014	Tees	1-1/2x1-1/4x1	2
B2-015	Tees	1-1/2x1-1/2x1-1/4	1
B2-016	Tees	2x2x1	1
B2-017	Tees	2x2x1	2
B2-018	Tees	2x2x1-1/4	3
B2-019			1
B2-019	Tees	1x1x1	16
B2-020	Tees	1-1/4	5
B2-021	Tees	2	1
B2-022	Tees	2-1/2x2-1/2x1	5
B2-022	Tees	2x2x1	1
B2-024	Tees	2-1/2x2-1/2x1-1/4	2
B2-025	Tees	3	1
B2-026	Tees	3x3x1-1/2	1
B2-027	Tees	3x3x2-1/2	1
B2-028	45° Elbows	2	2
B2-029	45° Elbows	2-1/2	4
B2-030	45° Elbows	3	4
B2-031	90° Elbows	1	44
B2-032	90° Elbows	1-1/4	4
B2-033	90° Elbows	1-1/2	3
B2-034	90° Elbows	2	3
B2-035	90° Elbows	2-1/2	10
B2-036	90° Elbows	3	8
			198

FIRE PROTECTION. SPRINKLERS			
ID	SPRINKLER TYPE	Dn	COUNT
B2-01	Residential Flush Pendent Sprinkler	1/2	47
B2-02	HIGH-TEMPERATURE SPRINKLER 280F	1/2	1
B2-03	Residential Horizontal Sidewall Sprinkler	1/2	1
			49

FIRE SUPPRESSION SPRINKLER SYSTEM. MECHANICAL ROOM FITTINGS AND EQUIPMENT			
ID	Fire Protection Fittings	Nominal Size In	COUNT
B2-105	90° Elbows	2-1/2	1
B2-01	FIRE PUMP	2-1/2	1
B2-101	Couplings	3-1/2x3	1
B2-102	Couplings	2-1/2	1
B2-103	Tees	3-1/2x3-1/2x2-1/2	2
B2-104	90° Elbows	3-1/2	1
B2-104*	45° Elbows	3-1/2	1
B2-106	Flange union 3.5"	3-1/2	2
B2-107	Flange union 2.5"	2-1/2	2
B2-108	Disk check valve, flanged 2.5"	2-1/2	2
B2-109	Disk check valve, flanged 3.5"	3-1/2	1
B2-110	Double disk check valve 3.5". Wafer type	3-1/2	1
			16

GIST RD. SFR 1

APN544-23-041; PROPOSED ADDRESS: 20555 GIST RD, LOS GATOS, CA 95033

REVISION HISTORY

S3DA Structural & Architectural Design
4196 Adams Ave. San Diego CA 92116
(619) 404-0220

Mr. Nader Moavenian
nader.m@s3da-design.com

REGISTERED PROFESSIONAL ENGINEER
GARRETT CROOK
C 057196
Exp. 12-31-202
CIVIL
STATE OF CALIFORNIA

2-11-2020

1. The contractor must check all dimensions on-site before commencing work

2. These drawings are to be read in conjunction with all relevant designer, engineer or specialist drawings and specifications

3. The contractor is responsible for providing all necessary temporary support to the building and any adjacent structures

COUNTY APPROVAL STAMP

REVISION DATE
02/11/2020

DRAWING NAME
073 B2. Sprinkler system axonometric view

1:1.43, 1" = 1'-0", 1:6.67, 1:33.3

MEP-09

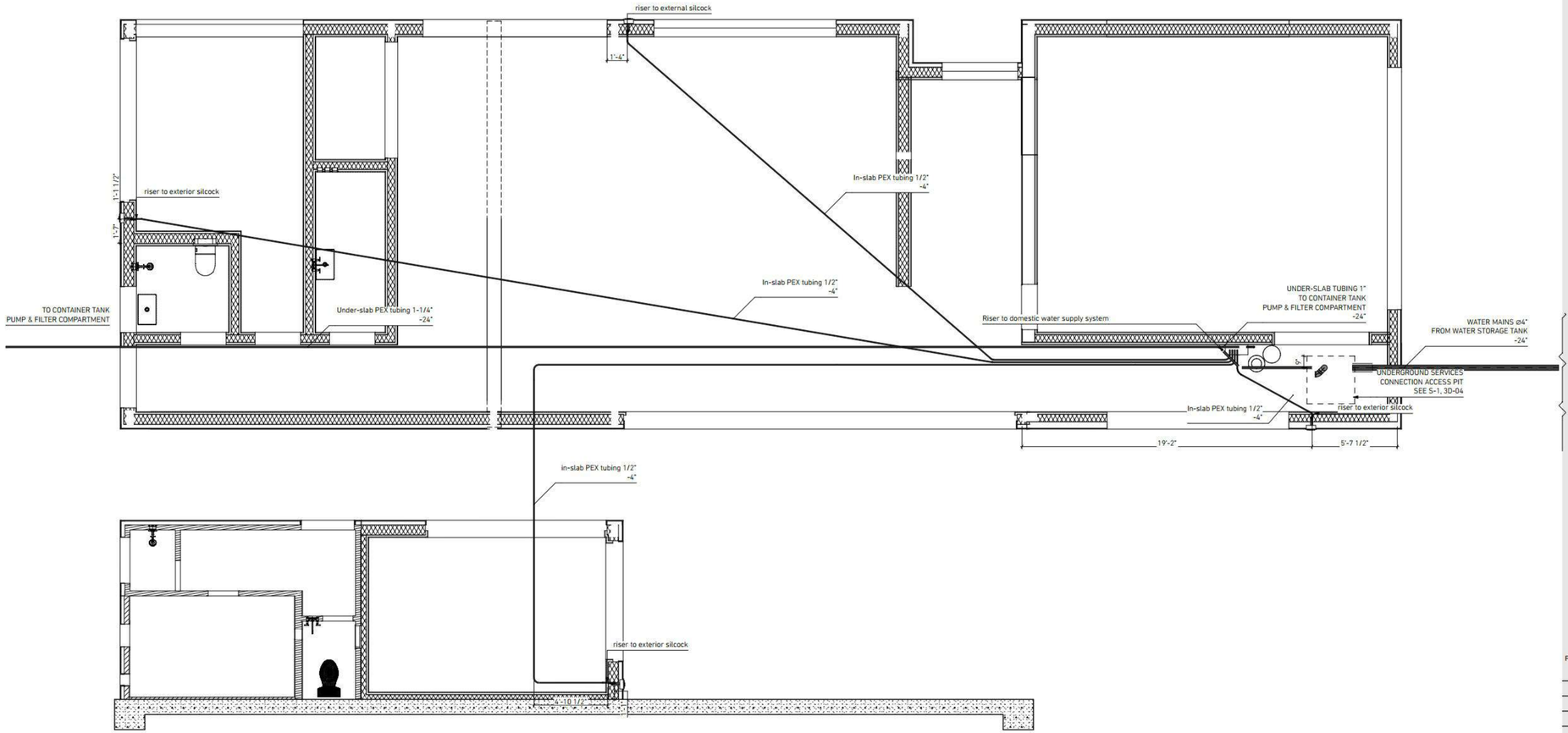

Pipes and PEX tubing installed in and under slab to be sheathed in HDPE foam sleeves.

GIST RD. SFR 1

APN544-23-041; PROPOSED ADDRESS: 20555

GIST RD, LOS GATOS, CA 95033

REVISION HISTORY

S3DA Structural & Architectural Design
4196 Adams Ave. San Diego CA 92116
(619) 404-0220

Mr. Nader Moavenian
nader.m@s3da-design.com

2-11-2020

1. The contractor must check all dimensions on-site before commencing work

2. These drawings are to be read in conjunction with all relevant designer, engineer or specialist drawings and specifications

3. The contractor is responsible for providing all necessary temporary support to the building and any adjacent structures

COUNTY APPROVAL STAMP

REVISION DATE
02/11/2020

DRAWING NAME
074 Water system 0,000 level

Drawing Scale

MEP-10

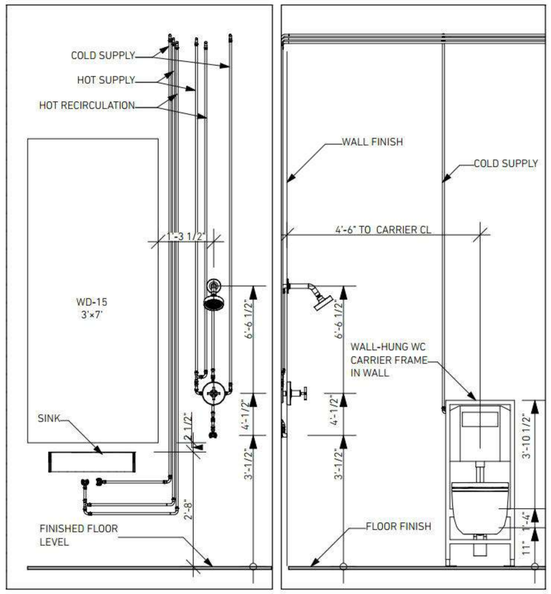

B-31 GF BATHROOM WINDOW WALL 1:20 B-77 GF BATHROOM TOILET WALL 1:20

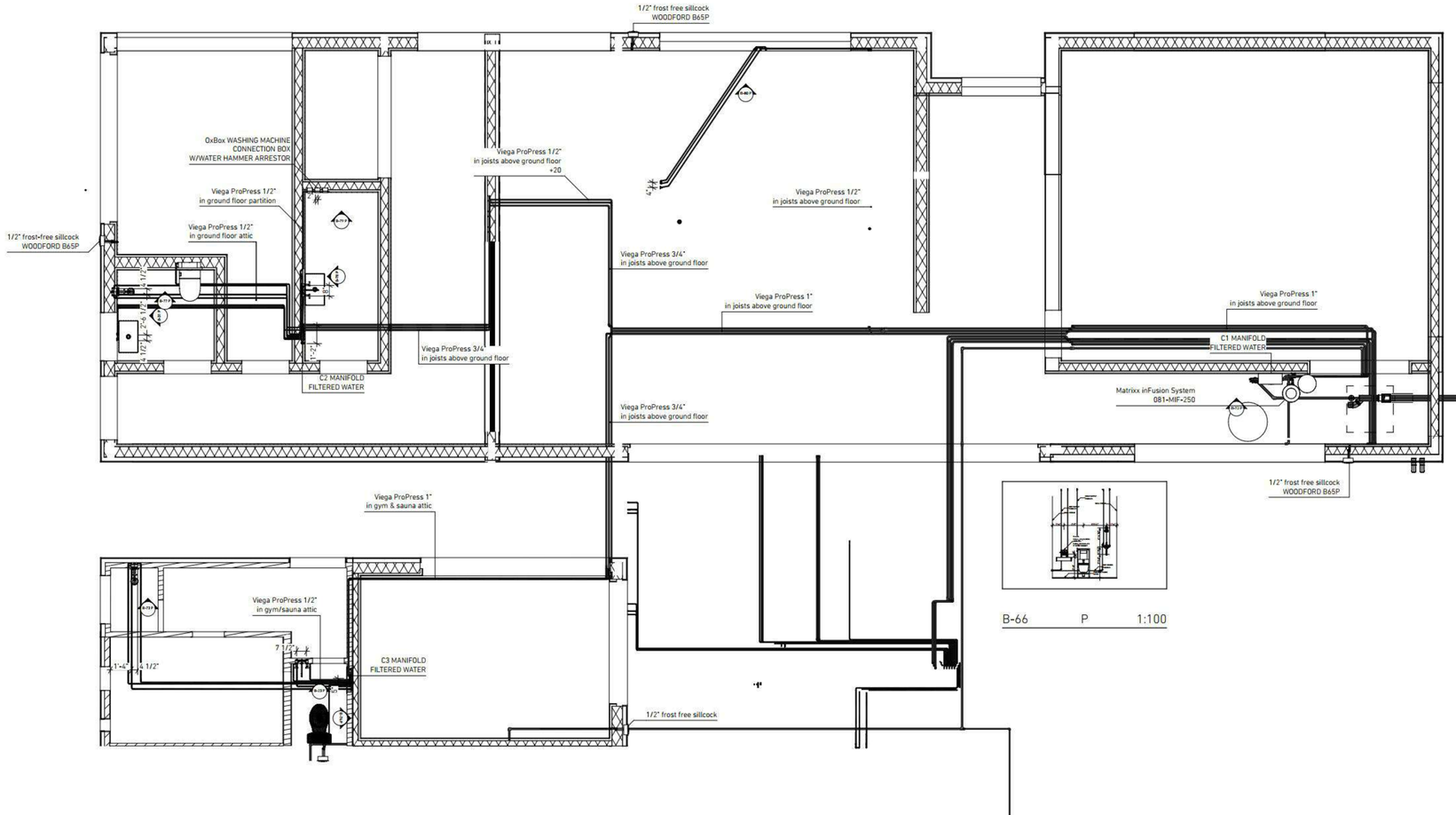

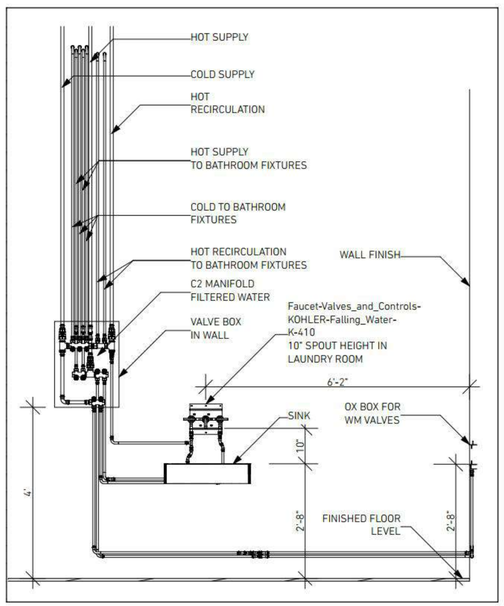

B-78 LAUNDRY ROOM LONG WALL 1:20

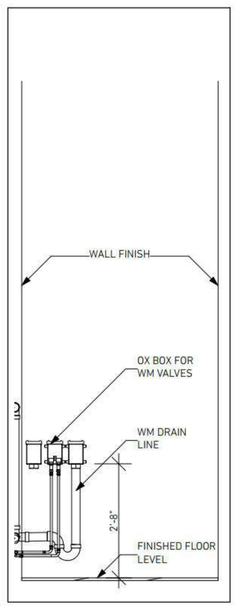

B-79 LAUNDRY W/D WALL 1:20

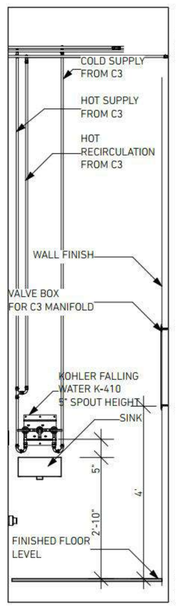

B-23 Sauna WC entry 1:20

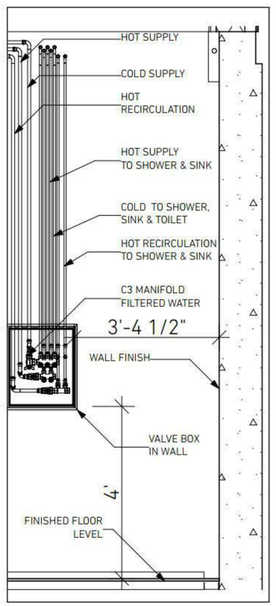

B-74 Sauna WC C3 manifold wall 1:20

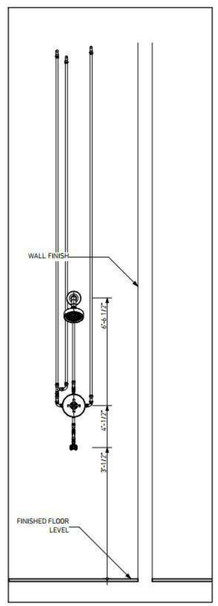

B-73 Sauna shower 1:20

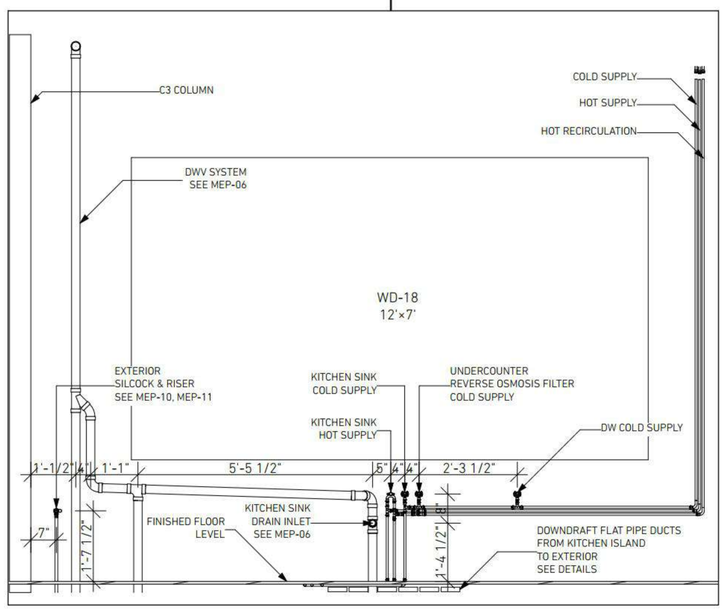

B-80 Kitchen countertop window wall view 1:100

GIST RD. SFR 1

APN544-23-041; PROPOSED ADDRESS: 20555 GIST RD, LOS GATOS, CA 95033

REVISION HISTORY

S3DA Structural & Architectural Design
4196 Adams Ave, San Diego CA 92116
(619) 404-0220

Mr. Nader Moavenian
nader.m@s3da-design.com

REGISTERED PROFESSIONAL ENGINEER
BARRETT CROOK
C 067186
Exp. 12-31-2021
CIVIL
STATE OF CALIFORNIA
2-11-2020

1. The contractor must check all dimensions on-site before commencing work

2. These drawings are to be read in conjunction with all relevant designer, engineer or specialist drawings and specifications

3. The contractor is responsible for providing all necessary temporary support to the building and any adjacent structures

COUNTY APPROVAL STAMP

REVISION DATE
02/11/2020

DRAWING NAME
075 Domestic water system. Ground floor plan

Drawing Scale

MEP-11

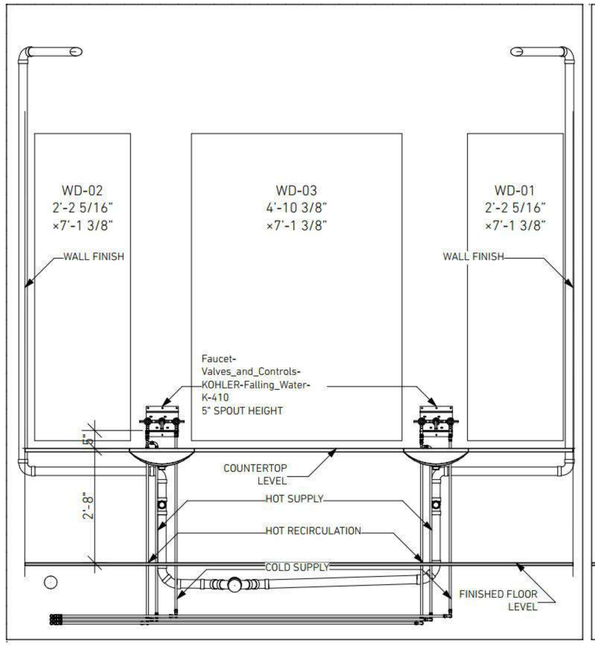

B-062 Master bathroom window wall view 1:20

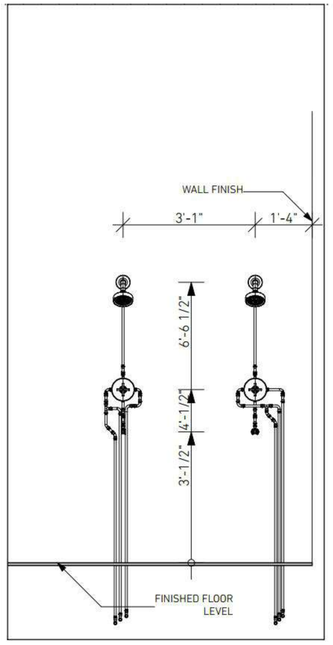

B-063 Master showers 1:20

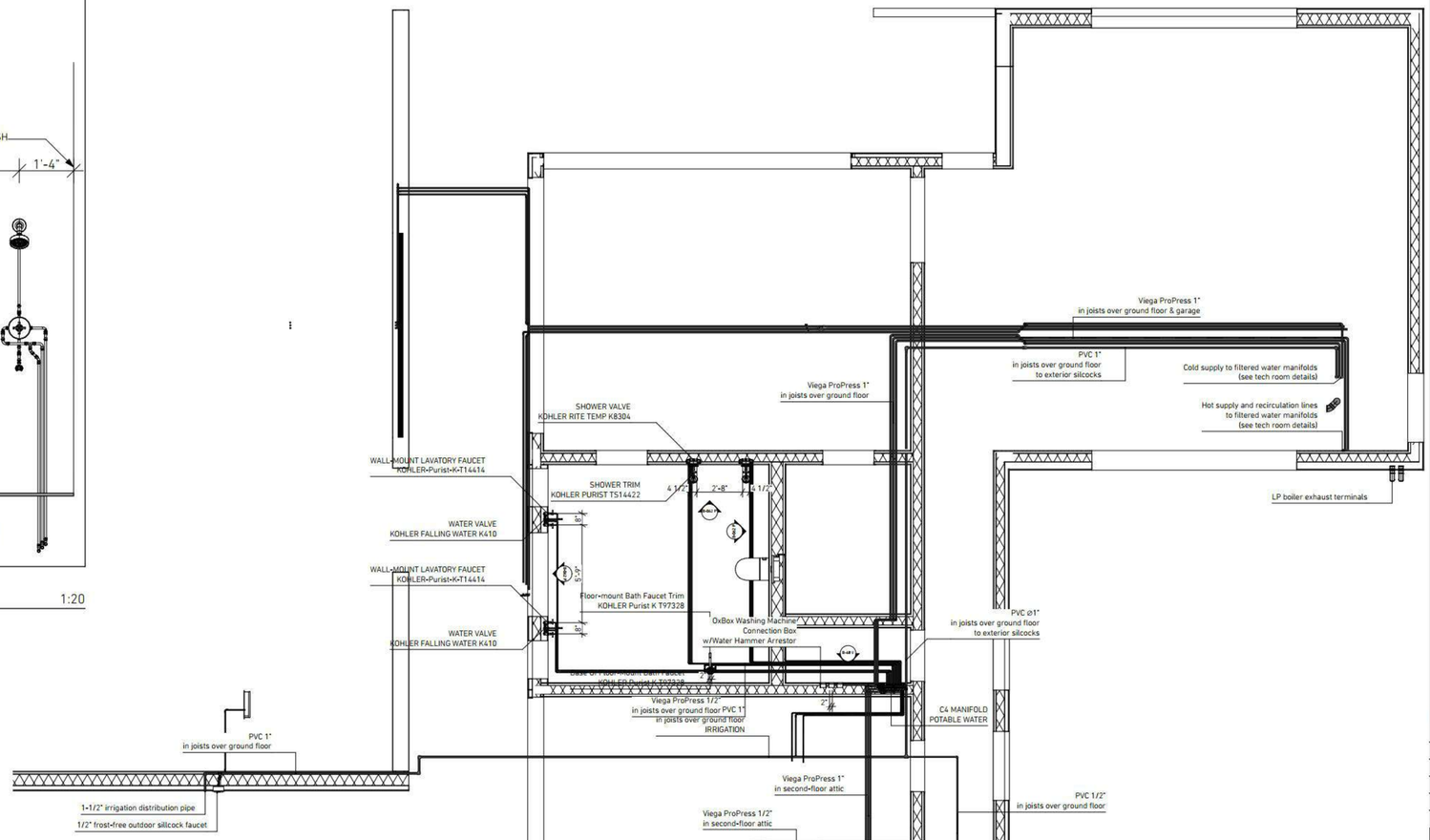

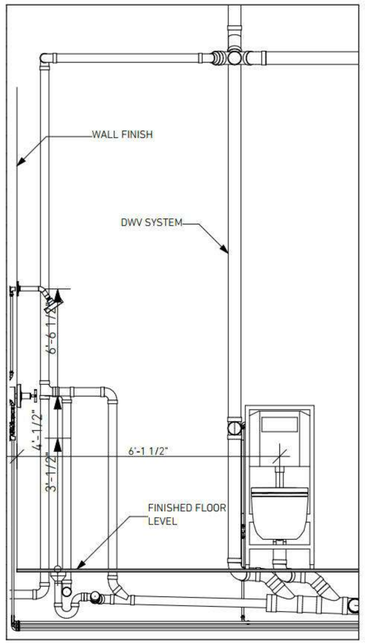

B-064 Master bathroom toilet wall 1:100

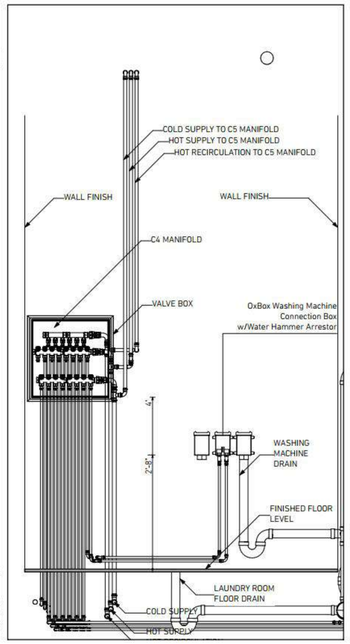

B-68 Laundry room manifold wall 1:20

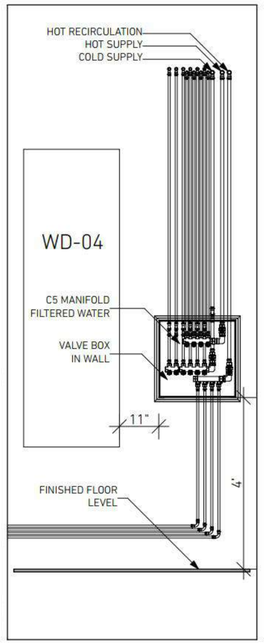

B-03 Luke's bathroom manifold wall 1:20

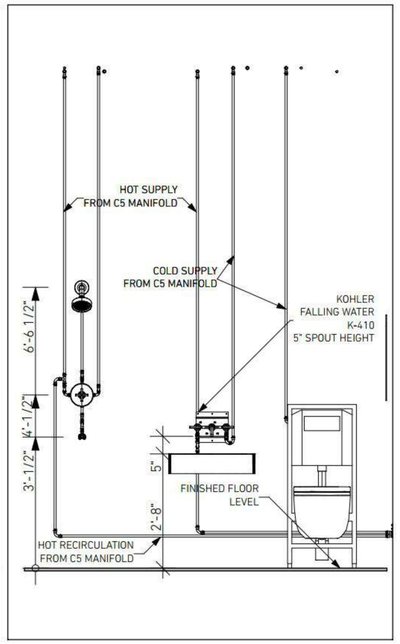

B-67 P 1:20

GIST RD. SFR 1

APN544-23-041; PROPOSED ADDRESS: 20555 GIST RD, LOS GATOS, CA 95033

REVISION HISTORY

S3DA Structural & Architectural Design
4196 Adams Ave. San Diego CA 92116
(619) 404-0220

Mr. Nader Moavenian
nader.m@s3da-design.com

REGISTERED PROFESSIONAL ENGINEER
BARRETT CROOK
C 057199
Exp. 12-31-2021
CIVIL
STATE OF CALIFORNIA

2-11-2020

1. The contractor must check all dimensions on-site before commencing work

2. These drawings are to be read in conjunction with all relevant designer, engineer or specialist drawings and specifications

3. The contractor is responsible for providing all necessary temporary support to the building and any adjacent structures

COUNTY APPROVAL STAMP

REVISION DATE
02/11/2020

DRAWING NAME
076 Domestic water system. 2nd Floor

Drawing Scale

MEP-12

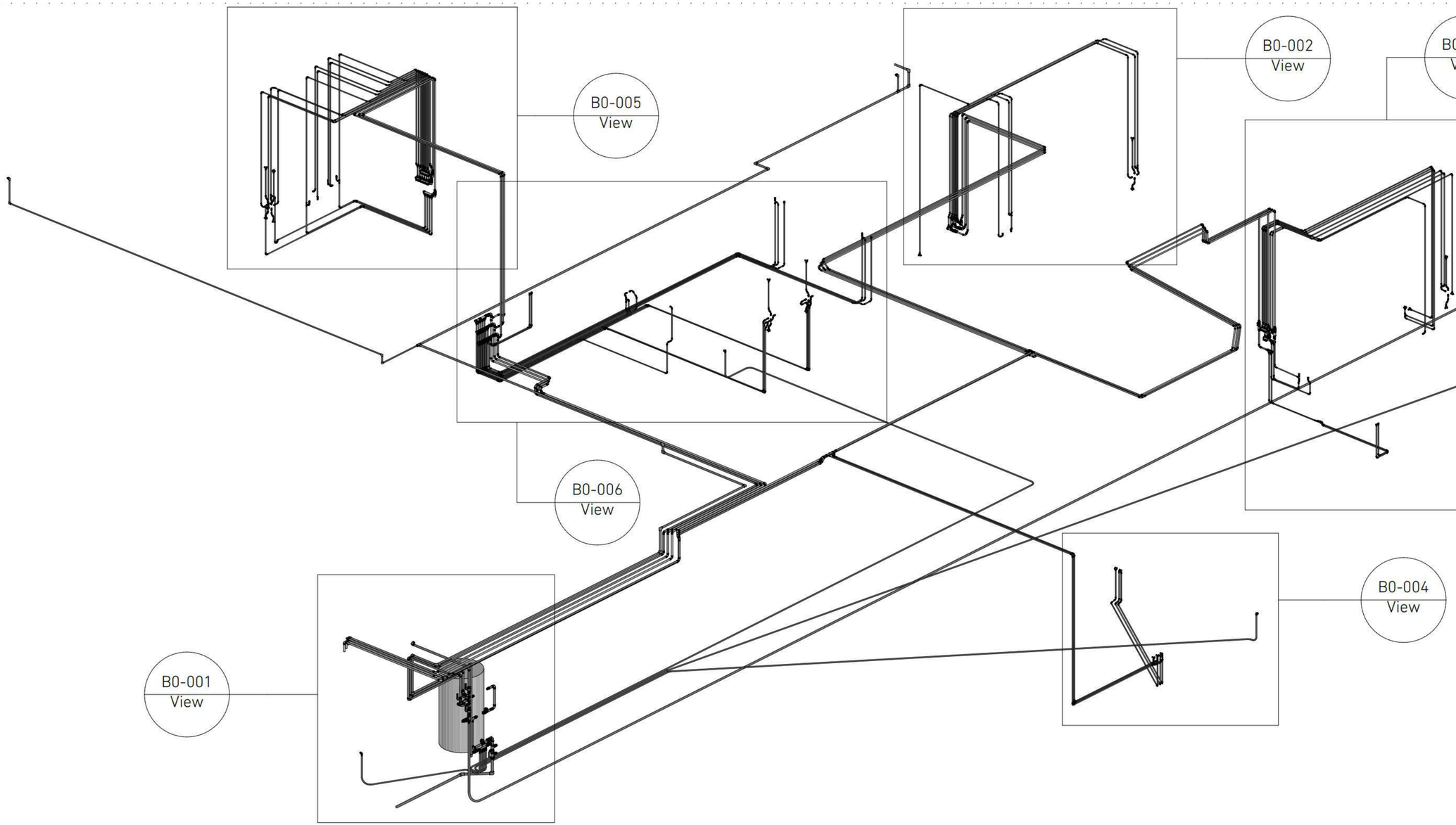

GIST RD. SFR 1

APN544-23-041; PROPOSED ADDRESS: 20555 GIST RD, LOS GATOS, CA 95033

REVISION HISTORY

S3DA Structural & Architectural Design
4196 Adams Ave. San Diego CA 92116
(619) 404-0220

Mr. Nader Moavenian
nader.m@s3da-design.com

REGISTERED PROFESSIONAL ENGINEER
Barrett C Crook
C 057196
Exp. 12.31.202
CIVIL
STATE OF CALIFORNIA
2-11-2020

1. The contractor must check all dimensions on-site before commencing work

2. These drawings are to be read in conjunction with all relevant designer, engineer or specialist drawings and specifications

3. The contractor is responsible for providing all necessary temporary support to the building and any adjacent structures

COUNTY APPROVAL STAMP

REVISION DATE
02/11/2020

DRAWING NAME
077 Domestic water. Axonometric view
1:35

MEP-13

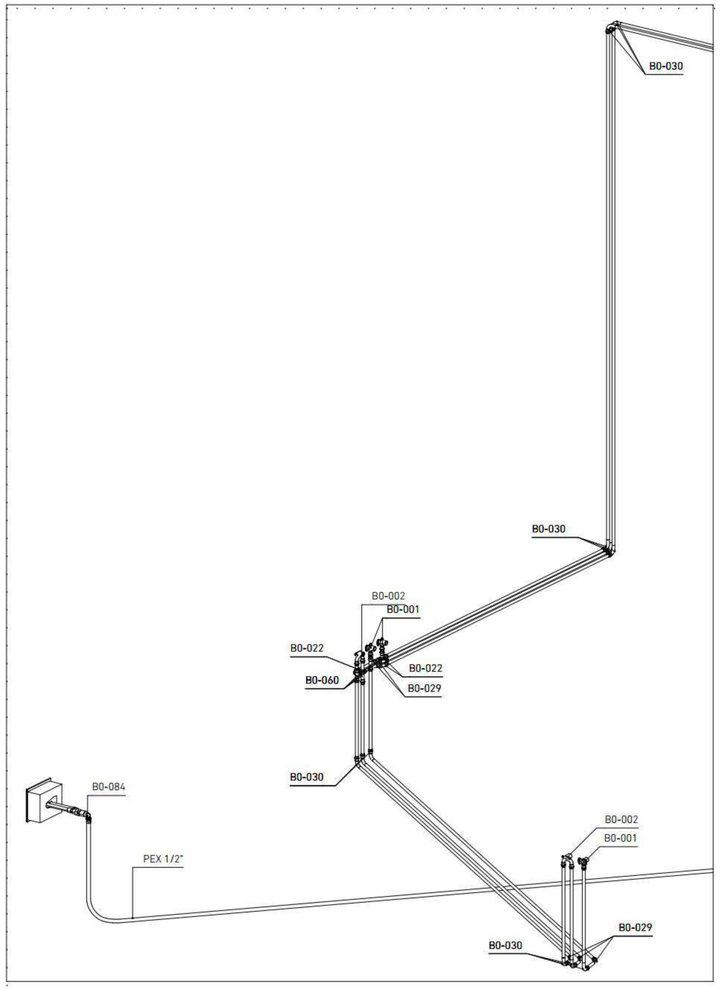

View 1:15

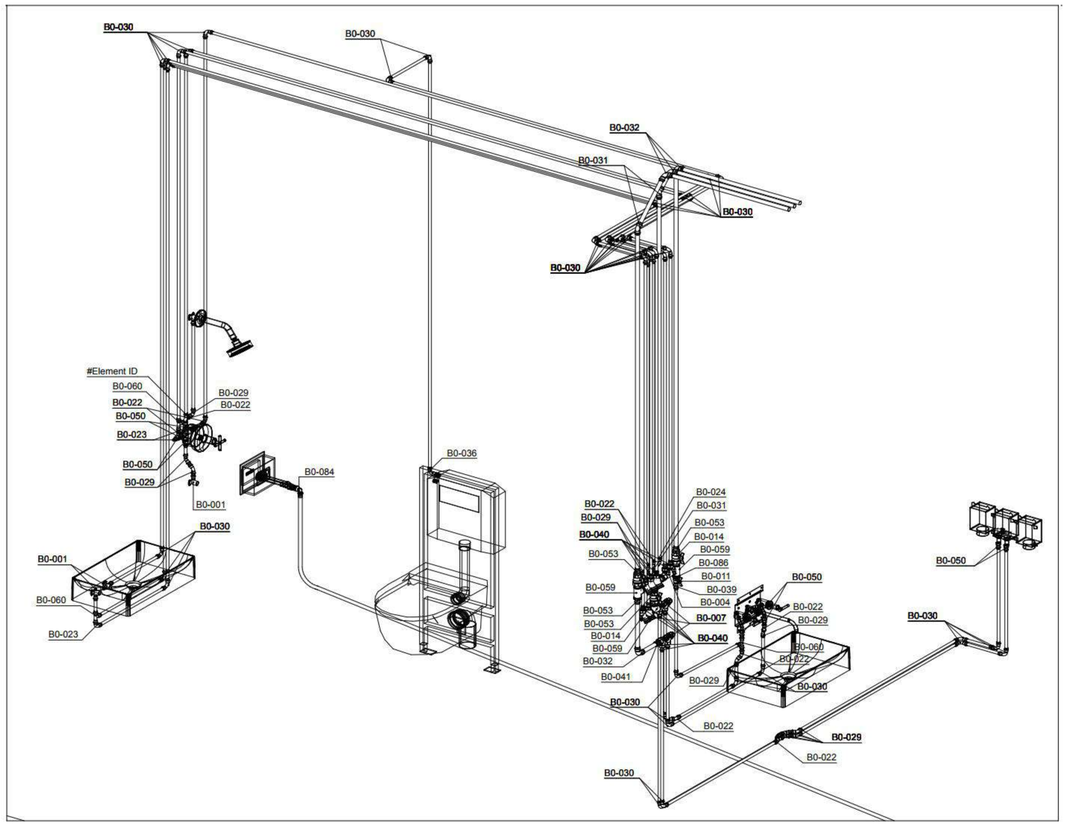

Axonometric view 1:15.72

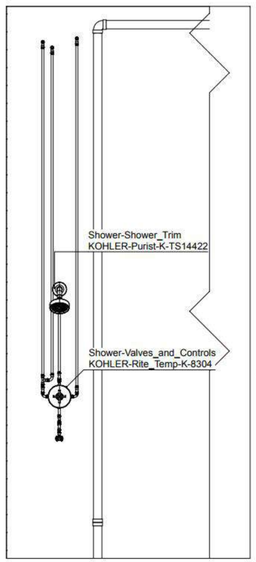

View 1:20

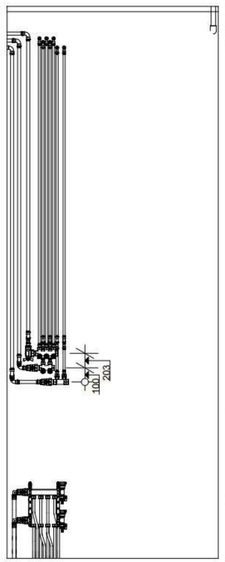

B-22 P 1:20

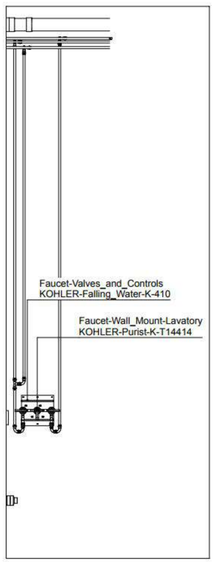

B-23 P 1:20

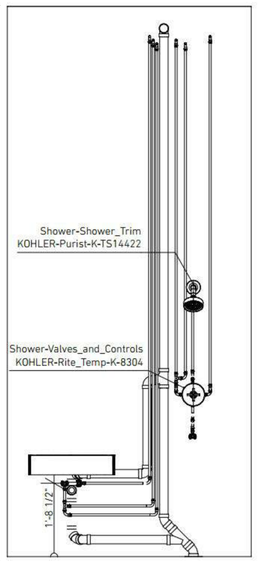

B-31 P 1:20

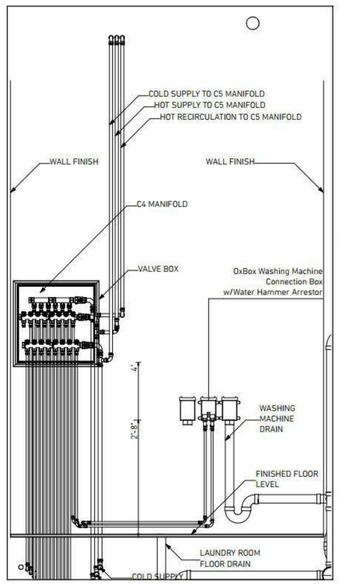

B-68 Laundry room manifold wall 1:20

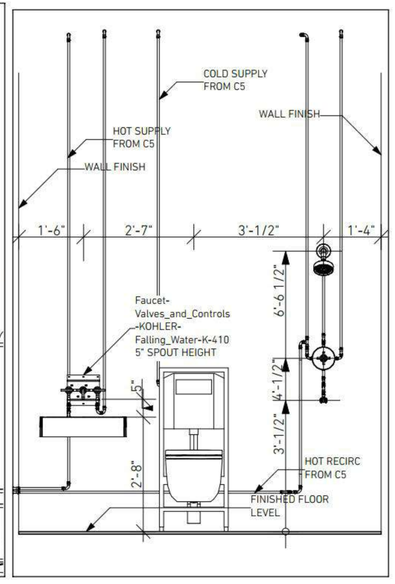

B-66 Regina's Bathroom 1:100

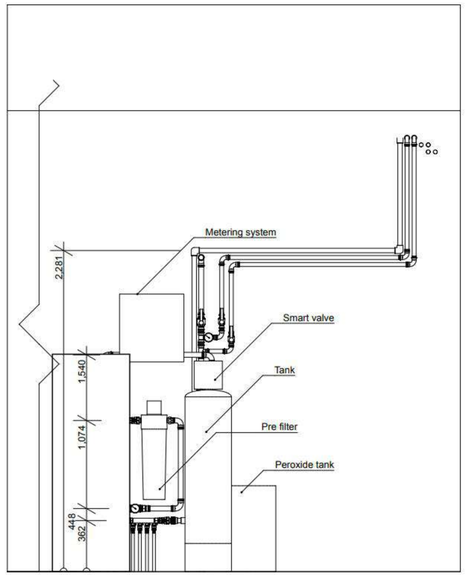

B-11 COLD WATER MECHANICAL ROOM 1:20

GIST RD. SFR 1

APN544-23-041; PROPOSED ADDRESS: 20555
GIST RD, LOS GATOS, CA 95033

REVISION HISTORY

S3DA Structural & Architectural Design
4196 Adams Ave. San Diego CA 92116
(619) 404-0220

Mr. Nader Moavenian
nader.m@s3da-design.com

REGISTERED PROFESSIONAL ENGINEER
GARRETT CROOK
C 057186
Exp. 12-31-2021
CIVIL
STATE OF CALIFORNIA

2-11-2020

1. The contractor must check all dimensions on-site before commencing work

2. These drawings are to be read in conjunction with all relevant designer, engineer or specialist drawings and specifications

3. The contractor is responsible for providing all necessary temporary support to the building and any adjacent structures

COUNTY APPROVAL STAMP

REVISION DATE
02/11/2020

DRAWING NAME
078 Domestic water. Views

Drawing Scale
1:15, 1:20, 1:15.72

MEP-14.1

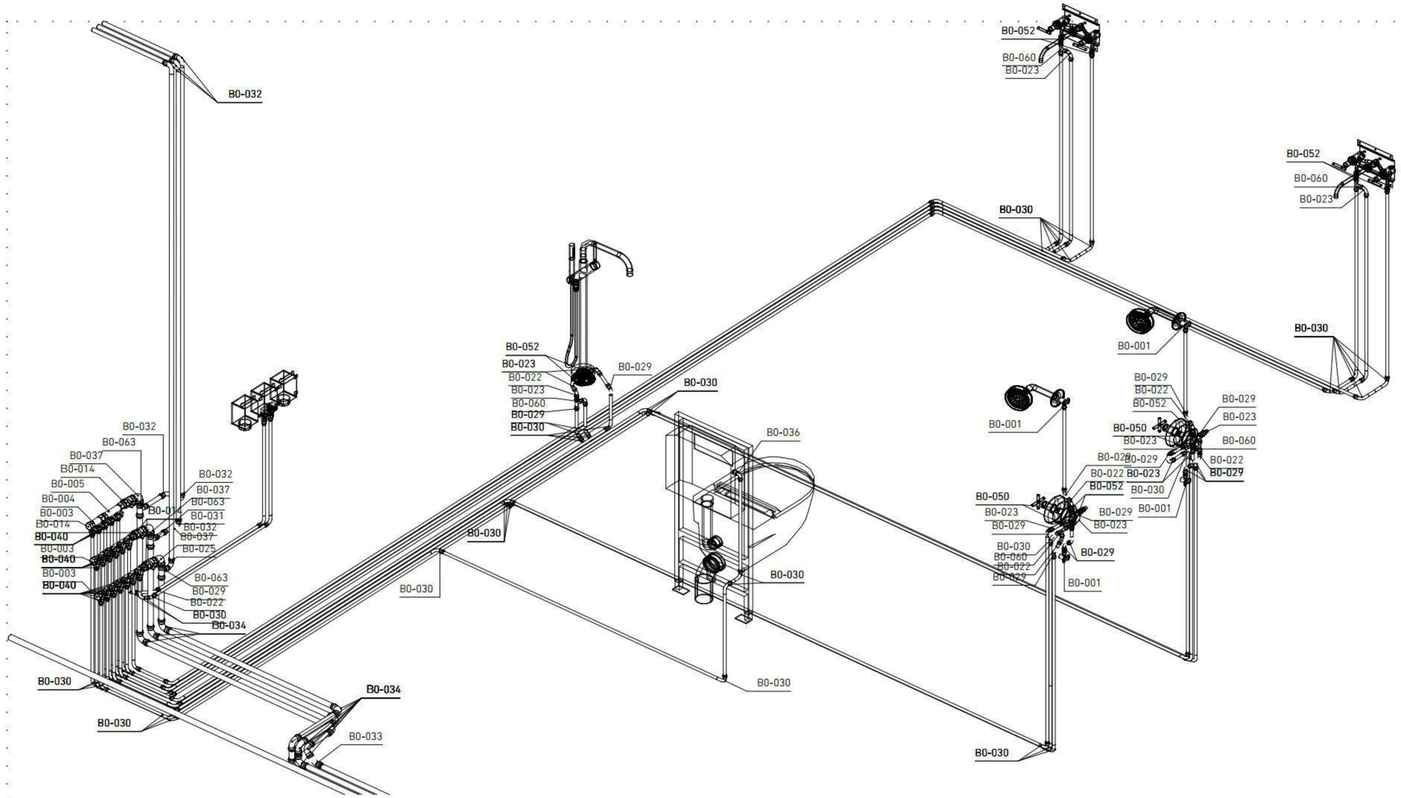

B0-006 Laundry & master bathroom 1:15

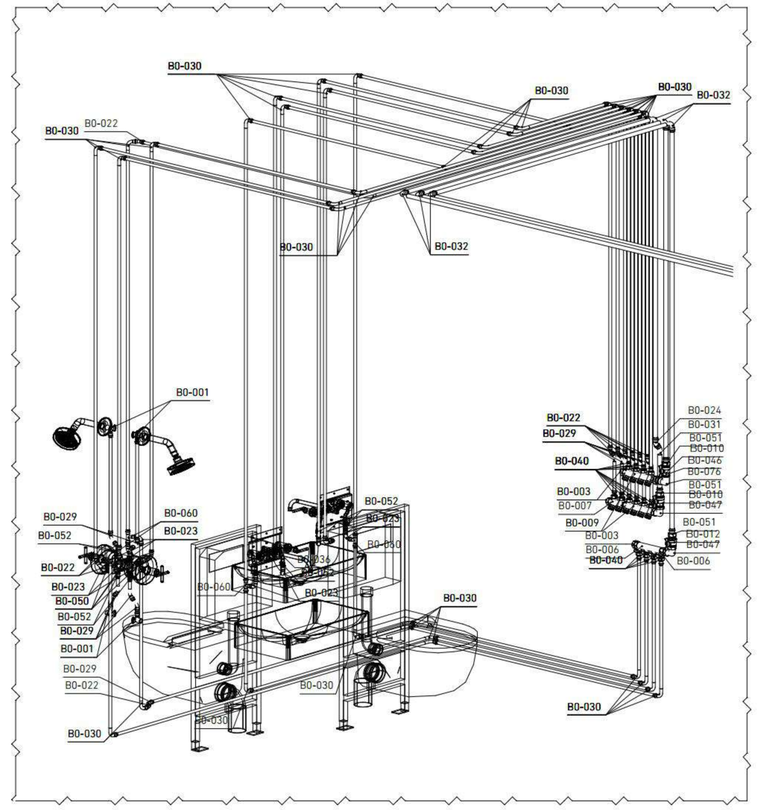

B0-005 Children's bathrooms Axonometric view 1:15

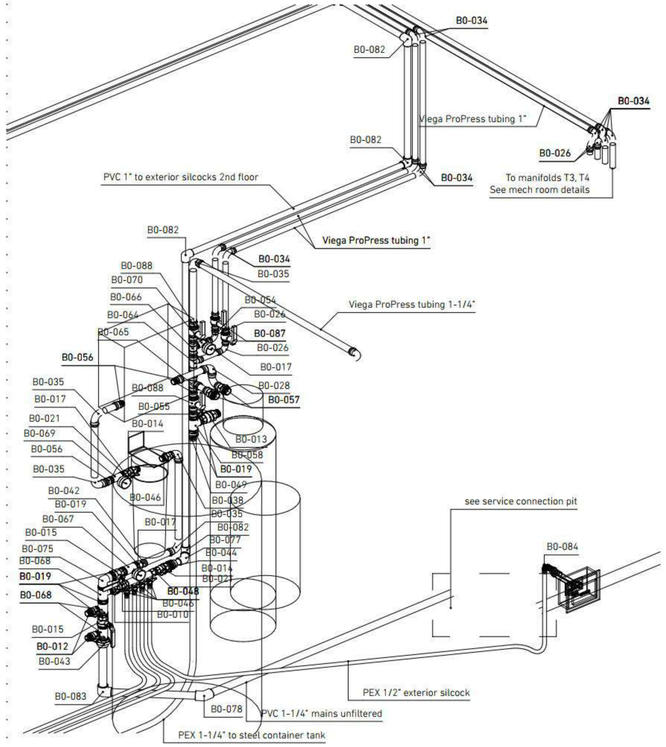

Axonometric view cold water in mech room 1:15

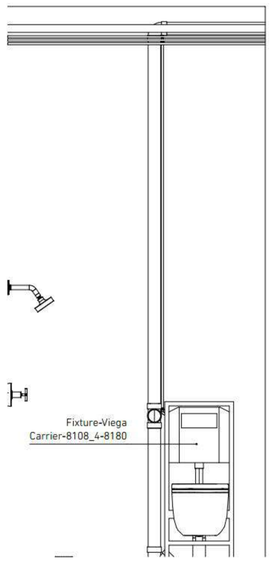

Ground floor bathroom 1:20

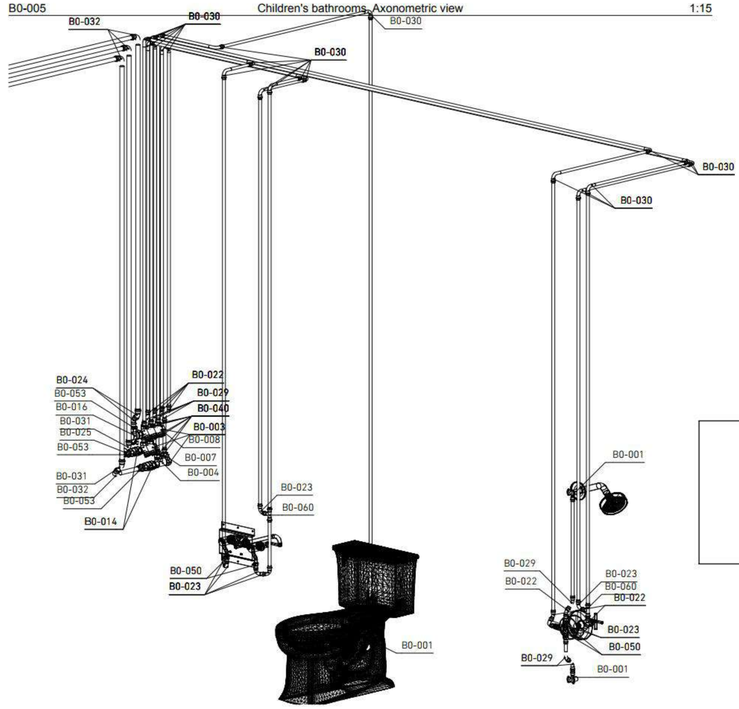

Axonometric view Gym & sauna 1:15

GIST RD. SFR 1

APN544-23-041; PROPOSED ADDRESS: 20555 GIST RD, LOS GATOS, CA 95033

REVISION HISTORY

S3DA Structural & Architectural Design
4196 Adams Ave. San Diego CA 92116
(619) 404-0220

Mr. Nader Moavenian
nader.m@s3da-design.com

REGISTERED PROFESSIONAL ENGINEER
BARRETT CROOK
C 057196
Exp. 12/31/2021
CIVIL
STATE OF CALIFORNIA

2-11-2020

1. The contractor must check all dimensions on-site before commencing work

2. These drawings are to be read in conjunction with all relevant designer, engineer or specialist drawings and specifications

3. The contractor is responsible for providing all necessary temporary support to the building and any adjacent structures

COUNTY APPROVAL STAMP

REVISION DATE
02/11/2020

DRAWING NAME
079 Domestic water. 2nd floor. Views & details

Drawing Scale
1:15, 1:20

MEP-14.2

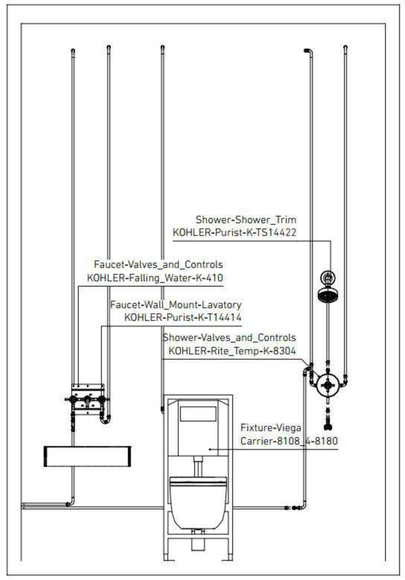

B-51 Luke's Bathroom 1:20

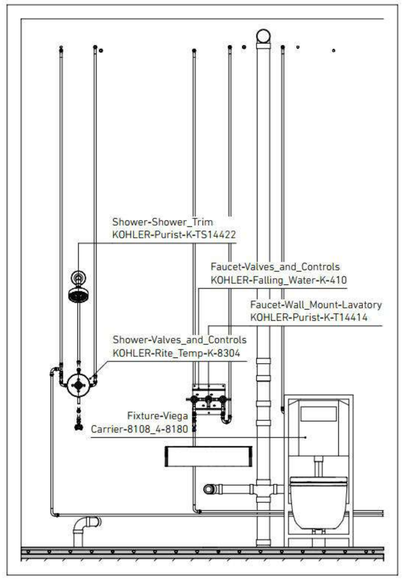

B-52 Regina's bathroom 1:20

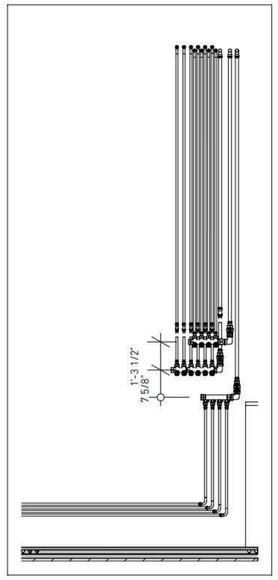

B-53 C5 MANIFOLD 1:20

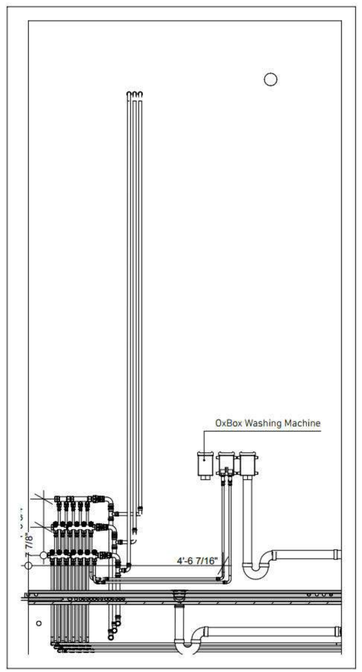

B-61 Laundry room 1:20

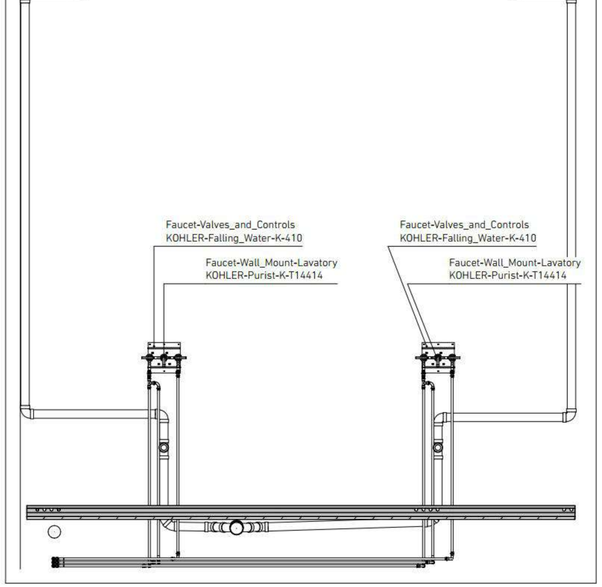

B-62 Master bathroom sinks 1:20

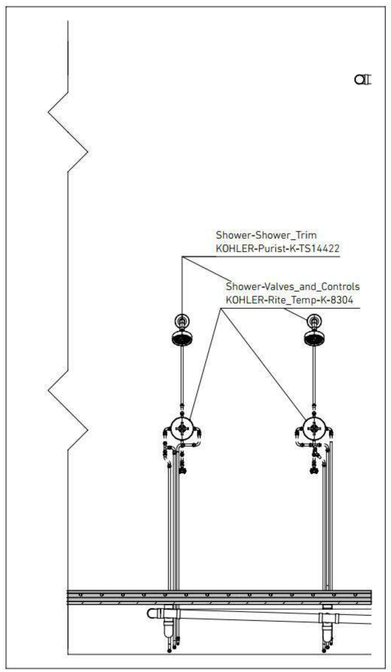

B-63 Master showers 1:20

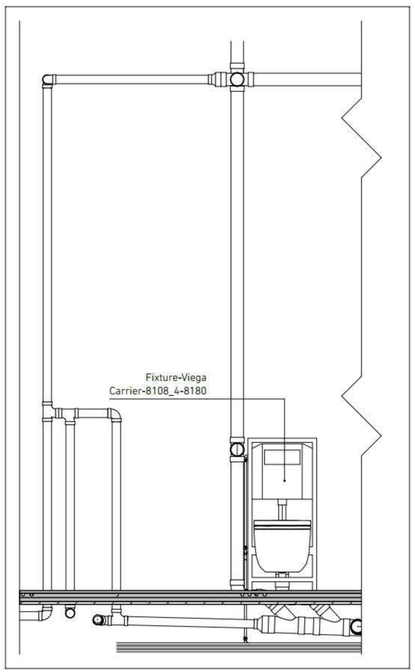

B-64 Master toilet 1:20

GIST RD. SFR 1

APN544-23-041; PROPOSED ADDRESS: 20555 GIST RD, LOS GATOS, CA 95033

REVISION HISTORY

S3DA Structural & Architectural Design
4196 Adams Ave. San Diego CA 92116
(619) 404-0220

Mr. Nader Moavenian
nader.m@s3da-design.com

REGISTERED PROFESSIONAL ENGINEER
BARRETT CROOK
C 057199
Exp. 12-31-2021
CIVIL
STATE OF CALIFORNIA

2-11-2020

1. The contractor must check all dimensions on-site before commencing work

2. These drawings are to be read in conjunction with all relevant designer, engineer or specialist drawings and specifications

3. The contractor is responsible for providing all necessary temporary support to the building and any adjacent structures

COUNTY APPROVAL STAMP

REVISION DATE
02/11/2020

DRAWING NAME
080 Water system. Views

Drawing Scale
1:20

MEP-15

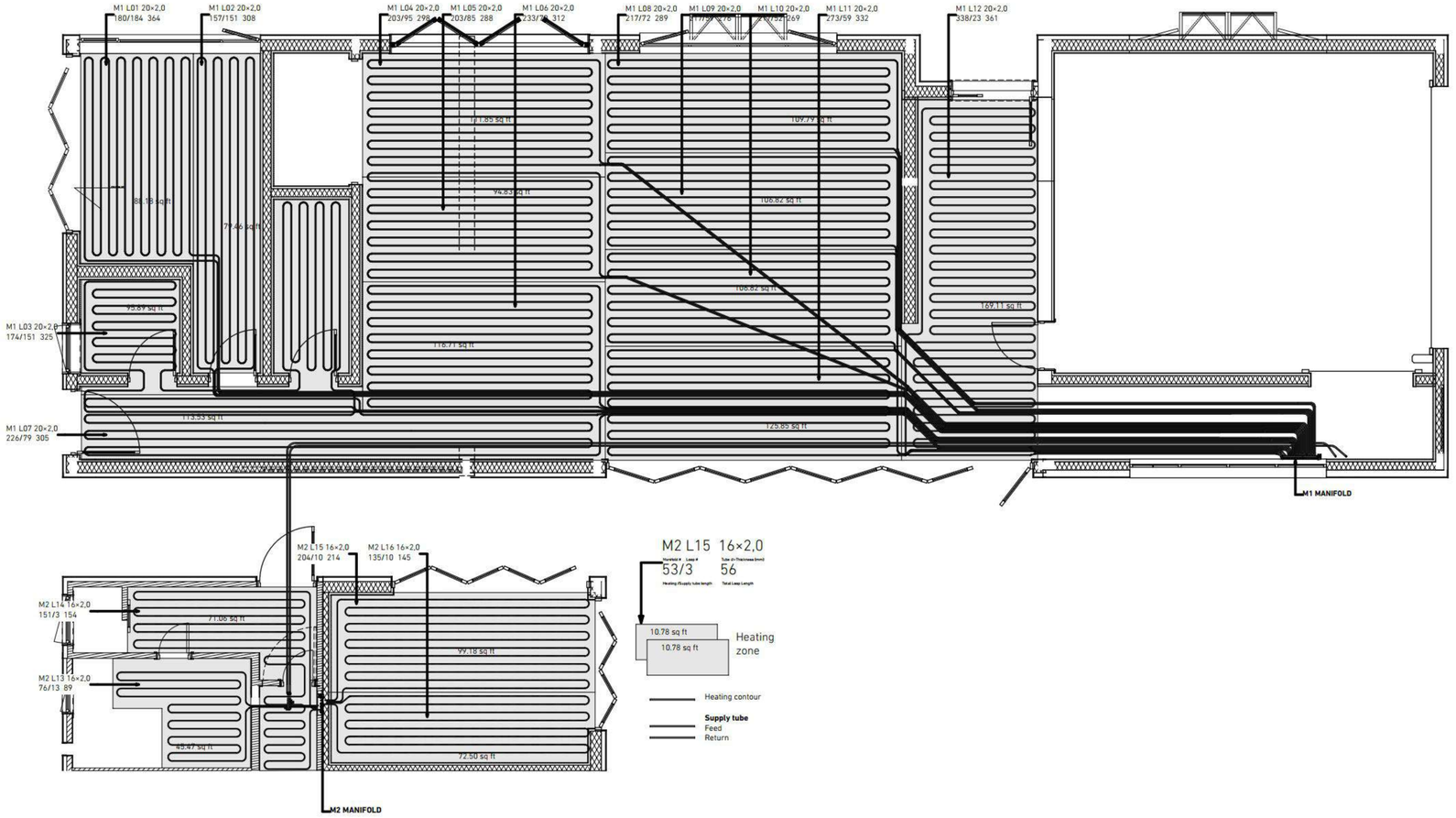

M1 MANIFOLD
LOOP NUMBERS & SEQUENCE OF INSTALLATION
12-11-7-3-6-2-1-5-4-10-9-8

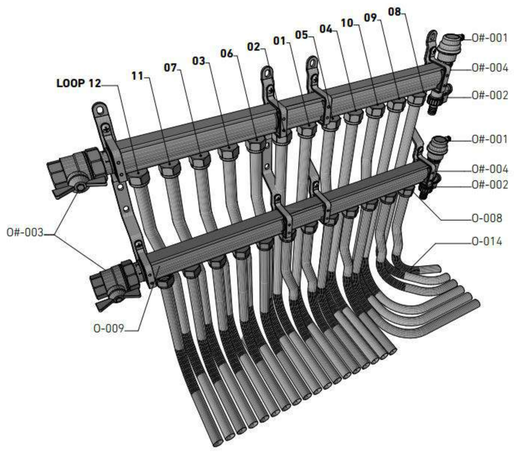

3D-34 M1 MANIFOLD 1:100

M2 MANIFOLD
LOOP NUMBERS & SEQUENCE OF INSTALLATION
14-15-13-16

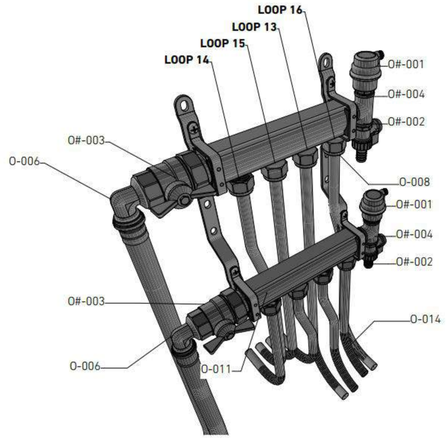

3D-36 M2 MANIFOLD 1:100

FITTINGS, MANIFOLDS, AND COUPLINGS SCHEDULE FOR HYDRONIC HEAT SYSTEM		
ID	**ITEM**	**COUNT**
O-001	ROTATING MM NIPPLE	2
O-002	PVC coupling 1"×1" EXTERNAL THREAD	2
O-003	PVC ANGLE 45 1"	4
O-004	PVC ANGLE 90 1"×1" EXTERNAL THREAD	2
O-005	PVC ANGLE 90 1"	8
O-006	PRESS ANGLE 3/4"×1" EXTERNAL THREAD	2
O-007	EUROCONUS MANIFOLD FITTING FOR PLASTIC TUBE 1/2"×3/4"	24
O-008	EUROCONUS MANIFOLD FITTING FOR PLASTIC TUBE 3/4"×3/4" EXTERNAL THREAD	41
O-009	1"×3/4" EUROCONUS×12 PORTS MANIFOLD WITH FLOW METERS	1
O-010	1"×3/4" EUROCONUS×7 PORTS MANIFOLD WITH FLOW METERS	2
O-011	1"×3/4" EUROCONUS×4 PORTS MANIFOLD WITH FLOW METERS	1
O-012	1"×3/4" EUROCONUS×3 PORTS MANIFOLD WITH FLOW METERS	1
O-013	SWING (TURN) LOCK 16	24
O-014	SWING (TURN) LOCK 20	42
	TOTAL COUNT	156

MANIFOLD FITTINGS SCHEDULE		
ID	**ITEM**	**COUNT**
O#-001	AUTOMATIC AIR-VENT 1/2" EXTERNAL THREAD	8
O#-002	SHUT-OFF DRAINAGE VALVE 1/2" EXTERNAL THREAD	8
O#-003	BALL VALVE WITH TEMPERATURE SENSOR SOCKET AND THERMOMETER 1" ET-IT	8
O#-004	END PIECE (TEE) FOR MANIFOLD 1" x 1/2" x 1/2"	8
	TOTAL COUNT	32

HYDRONIC HEAT TUBE INSTALLATION NOTE

HEATING CONTOURS OF THE HYDRONIC FLOOR LOOPS ARE INSTALLED INTO THE GROOVES OF THE TYCO HYDRONIC FLOOR PANELS.
SUPPLY AND RETURN SECTIONS OF THE LOOPS SHOULD BE PLACED IN THE HARD INSULATION LAYER BELOW TYCO PANELS. INSTALLER TO MAKE APPROPRIATE GROOVES TO ACCOMMODATE SUPPLY AND RETURN SECTIONS: USE HOT KNIFE, SAW OR SHARP KNIFE. ALL EXPOSED SECTIONS OF TUBING TO BE INSULATED WITH HDPE FOAM SLEEVE 1/4 " THICK MIN.

GIST RD. SFR 1

APN544-23-041; PROPOSED ADDRESS: 20555
GIST RD, LOS GATOS, CA 95033

REVISION HISTORY

S3DA Structural & Architectural Design
4196 Adams Ave. San Diego CA 92116
(619) 404-0220

Mr. Nader Moavenian
nader.m@s3da-design.com

2-11-2020

1. The contractor must check all dimensions on-site before commencing work

2. These drawings are to be read in conjunction with all relevant designer, engineer or specialist drawings and specifications

3. The contractor is responsible for providing all necessary temporary support to the building and any adjacent structures

COUNTY APPROVAL STAMP

REVISION DATE
02/11/2020

DRAWING NAME
081 Hydronic heated floor layout. Ground floor

MEP-16

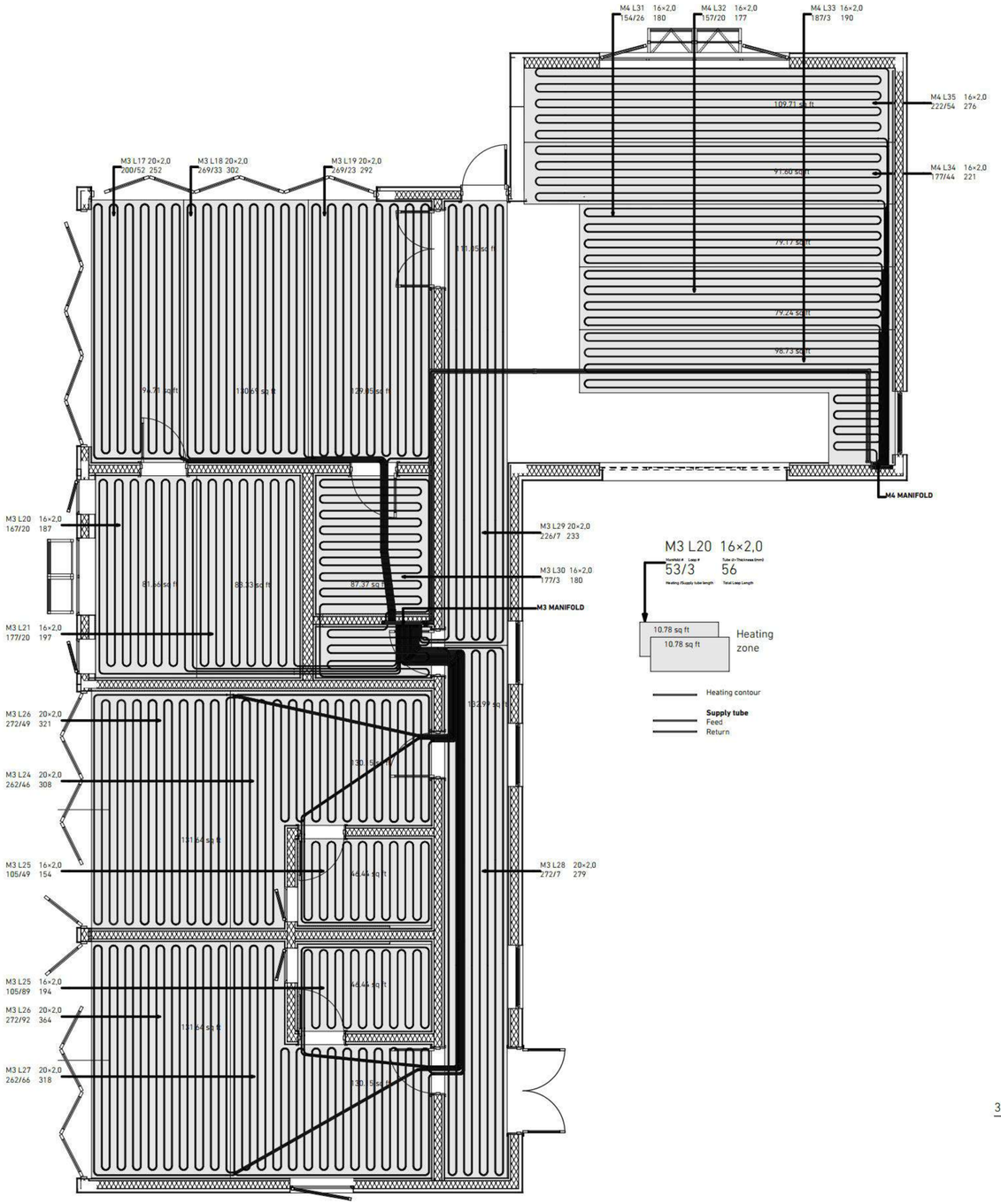

3. Second floor (7) 1:50

M3 MANIFOLD

LOOP NUMBERS & SEQUENCE OF INSTALLATION

30-17-18-19-21-20-22-23-24-25-26-27-28-29

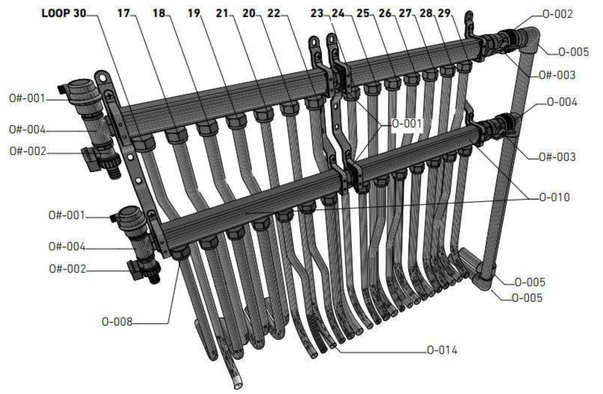

3D-37 M3 MANIFOLD 1:100

M4 MANIFOLD

LOOP NUMBERS & SEQUENCE OF INSTALLATION

35-34-31-32-33

3D-38 M4 MANIFOLD 1:100

FITTINGS, MANIFOLDS, AND COUPLINGS SCHEDULE FOR HYDRONIC HEAT SYSTEM		
ID	**ITEM**	**COUNT**
O-001	ROTATING MM NIPPLE	2
O-002	PVC coupling 1"×1" EXTERNAL THREAD	2
O-003	PVC ANGLE 45 1"	4
O-004	PVC ANGLE 90 1"×1" EXTERNAL THREAD	2
O-005	PVC ANGLE 90 1"	8
O-006	PRESS ANGLE 3/4"×1" EXTERNAL THREAD	2
O-007	EUROCONUS MANIFOLD FITTING FOR PLASTIC TUBE 1/2"×3/4"	24
O-008	EUROCONUS MANIFOLD FITTING FOR PLASTIC TUBE 3/4"×3/4" EXTERNAL THREAD	41
O-009	1"×3/4" EUROCONUS×12 PORTS MANIFOLD WITH FLOW METERS	1
O-010	1"×3/4" EUROCONUS×7 PORTS MANIFOLD WITH FLOW METERS	2
O-011	1"×3/4" EUROCONUS×4 PORTS MANIFOLD WITH FLOW METERS	1
O-012	1"×3/4" EUROCONUS×5 PORTS MANIFOLD WITH FLOW METERS	1
O-013	SWING (TURN) LOCK 16	24
O-014	SWING (TURN) LOCK 20	42
	TOTAL COUNT	156

MANIFOLD FITTINGS SCHEDULE		
ID	**ITEM**	**COUNT**
O#-001	AUTOMATIC AIR-VENT 1/2" EXTERNAL THREAD	8
O#-002	SHUT-OFF DRAINAGE VALVE 1/2" EXTERNAL THREAD	8
O#-003	BALL VALVE WITH TEMPERATURE SENSOR SOCKET AND THERMOMETER 1" ET-IT	8
O#-004	END PIECE (TEE) FOR MANIFOLD 1" x 1/2" x 1/2"	8
	TOTAL COUNT	32

HYDRONIC HEAT TUBE INSTALLATION NOTE

HEATING CONTOURS OF THE HYDRONIC FLOOR LOOPS ARE INSTALLED INTO THE GROOVES OF THE TYCO HYDRONIC FLOOR PANELS.
SUPPLY AND RETURN SECTIONS OF THE LOOPS SHOULD BE PLACED IN THE HARD INSULATION LAYER BELOW TYCO PANELS. INSTALLER TO MAKE APPROPRIATE GROOVES TO ACCOMMODATE SUPPLY AND RETURN SECTIONS: USE HOT KNIFE, SAW OR SHARP KNIFE. ALL EXPOSED SECTIONS OF TUBING TO BE INSULATED WITH HDPE FOAM SLEEVE 1/4 " THICK MIN.

GIST RD. SFR 1

APN544-23-041; PROPOSED ADDRESS: 20555 GIST RD, LOS GATOS, CA 95033

REVISION HISTORY

S3DA Structural & Architectural Design
4196 Adams Ave. San Diego CA 92116
(619) 404-0220

Mr. Nader Moavenian
nader.m@s3da-design.com

REGISTERED PROFESSIONAL ENGINEER
BARRETT CROOKHAM
C 057196
Exp. 12.31.2021
CIVIL
STATE OF CALIFORNIA

2-11-2020

1. The contractor must check all dimensions on-site before commencing work

2. These drawings are to be read in conjunction with all relevant designer, engineer or specialist drawings and specifications

3. The contractor is responsible for providing all necessary temporary support to the building and any adjacent structures

COUNTY APPROVAL STAMP

REVISION DATE
02/11/2020

DRAWING NAME
082 Hydronic heated floor layout. 2nd floor

Drawing Scale

MEP-17

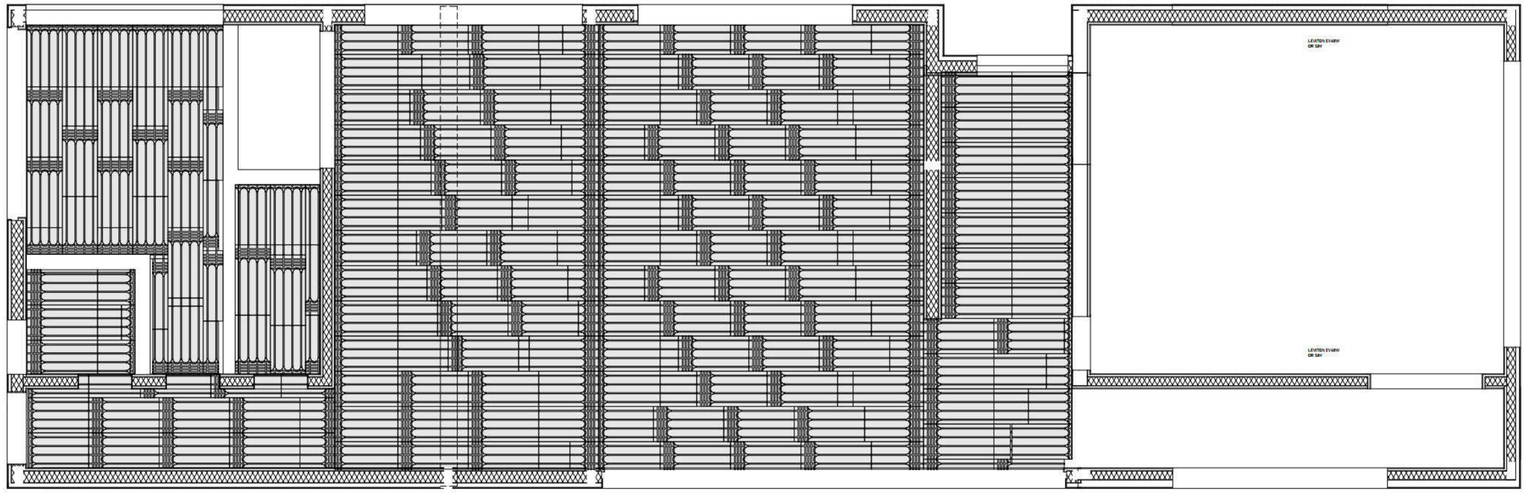

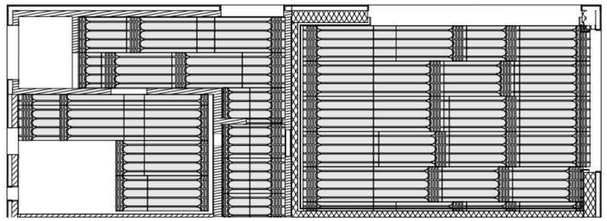

TYCO HYDRONIC FLOOR
PANELS: **238** FULL PANELS

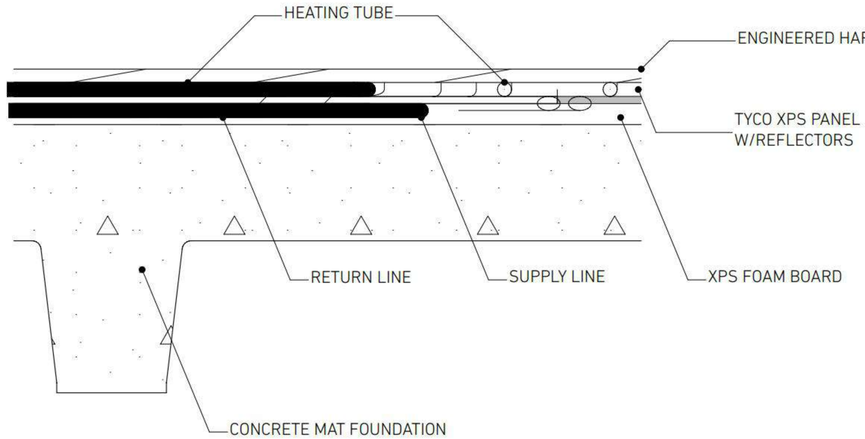

S-66 SUBFLOOR STRUCTURE GROUND FLOOR 1:50

TYCO Hydronic Radiant Floor XPS Panels With Aluminum Reflectors

SKU	PANEL SIZE	TUBE DIAMETER	CHANNEL SPACING	ALU THICKNESS
UHP-AL25-16	1200*600*25mm	16mm	150/200mm	0.03mm
UHP-AL30-20	**1200*600*30mm**	**20/16mm**	**150/200mm**	**0.03mm**
UHP-AL25-16	1200*600*25mm	16mm	150/200mm	0.1mm
UHP-AL30-20	**1200*600*30mm**	**20/16mm**	**150/200mm**	**0.1mm**
UHP-AL25-16	1200*600*25mm	16mm	150/200mm	0.2mm
UHP-AL30-20	**1200*600*30mm**	**20/16mm**	**150/200mm**	**0.2mm**

FLOOR DESIGNS ARE FOR 30mm THICK TYCO PANELS.
RECOMMENDED MANUFACTURER'S PRODUCT SKU'S IN BOLD FONT.
IF INSTALLER USES A DIFFERENT TYPE OF PANEL, COMPENSATE FOR ANY FLOOR HEIGHT CHANGES.

GIST RD. SFR 1

APN544-23-041; PROPOSED ADDRESS: 20555 GIST RD, LOS GATOS, CA 95033

REVISION HISTORY

S3DA Structural & Architectural Design
4196 Adams Ave. San Diego CA 92116
(619) 404-0220

Mr. Nader Moavenian
nader.m@s3da-design.com

REGISTERED PROFESSIONAL ENGINEER
BARRETT CROOKHAM
C 057196
Exp. 12-31-2021
CIVIL
STATE OF CALIFORNIA

2-11-2020

1. The contractor must check all dimensions on-site before commencing work

2. These drawings are to be read in conjunction with all relevant designer, engineer or specialist drawings and specifications

3. The contractor is responsible for providing all necessary temporary support to the building and any adjacent structures

COUNTY APPROVAL STAMP

REVISION DATE
02/11/2020

DRAWING NAME
083 TYCO hydronic floor panel layout

Drawing Scale

MEP-18

TYCO HYDRONIC FLOOR PANELS:
275 FULL PANELS

3. TYCO PANEL LAYOUT SECOND FLOOR 1:50

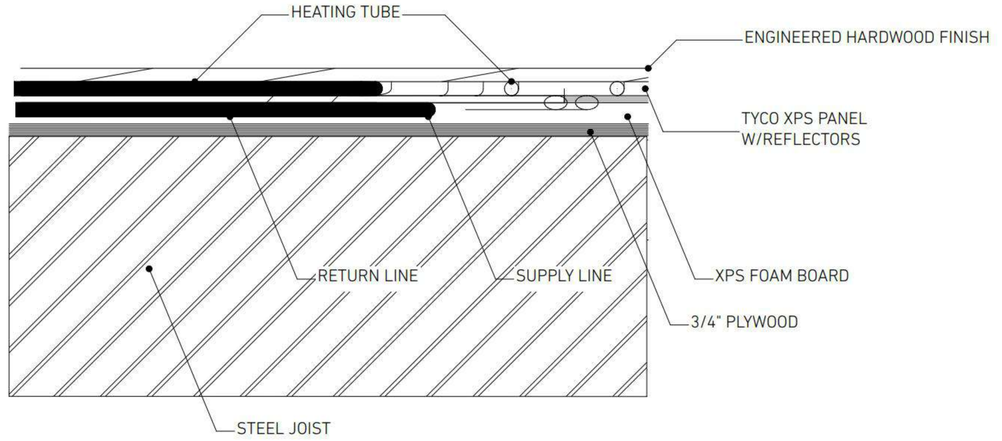

SUBFLOOR STRUCTURE SECOND FLOOR

TYCO Hydronic Radiant Floor XPS Panels With Aluminum Reflectors				
SKU	PANEL SIZE	TUBE DIAMETER	CHANNEL SPACING	ALU THICKNESS
UHP-AL25-16	1200*600*25mm	16mm	150/200mm	0.03mm
UHP-AL30-20	**1200*600*30mm**	**20/16mm**	**150/200mm**	**0.03mm**
UHP-AL25-16	1200*600*25mm	16mm	150/200mm	0.1mm
UHP-AL30-20	**1200*600*30mm**	**20/16mm**	**150/200mm**	**0.1mm**
UHP-AL25-16	1200*600*25mm	16mm	150/200mm	0.2mm
UHP-AL30-20	**1200*600*30mm**	**20/16mm**	**150/200mm**	**0.2mm**

FLOOR DESIGNS ARE FOR 30mm THICK TYCO PANELS.
RECOMMENDED MANUFACTURER'S PRODUCT SKU'S IN BOLD FONT.
IF INSTALLER USES A DIFFERENT TYPE OF PANEL, COMPENSATE FOR ANY FLOOR HEIGHT CHANGES.

GIST RD. SFR 1

APN544-23-041; PROPOSED ADDRESS: 20555
GIST RD, LOS GATOS, CA 95033

REVISION HISTORY

S3DA Structural & Architectural Design
4196 Adams Ave. San Diego CA 92116
(619) 404-0220

Mr. Nader Moavenian
nader.m@s3da-design.com

REGISTERED PROFESSIONAL ENGINEER
BARRETT CROOK
C 057186
Exp. 12-31-2021
CIVIL
STATE OF CALIFORNIA

2-11-2020

1. The contractor must check all dimensions on-site before commencing work

2. These drawings are to be read in conjunction with all relevant designer, engineer or specialist drawings and specifications

3. The contractor is responsible for providing all necessary temporary support to the building and any adjacent structures

COUNTY APPROVAL STAMP

REVISION DATE
02/11/2020

DRAWING NAME
084 TYCO panel layout. 2nd floor

Drawing Scale

MEP-18.2

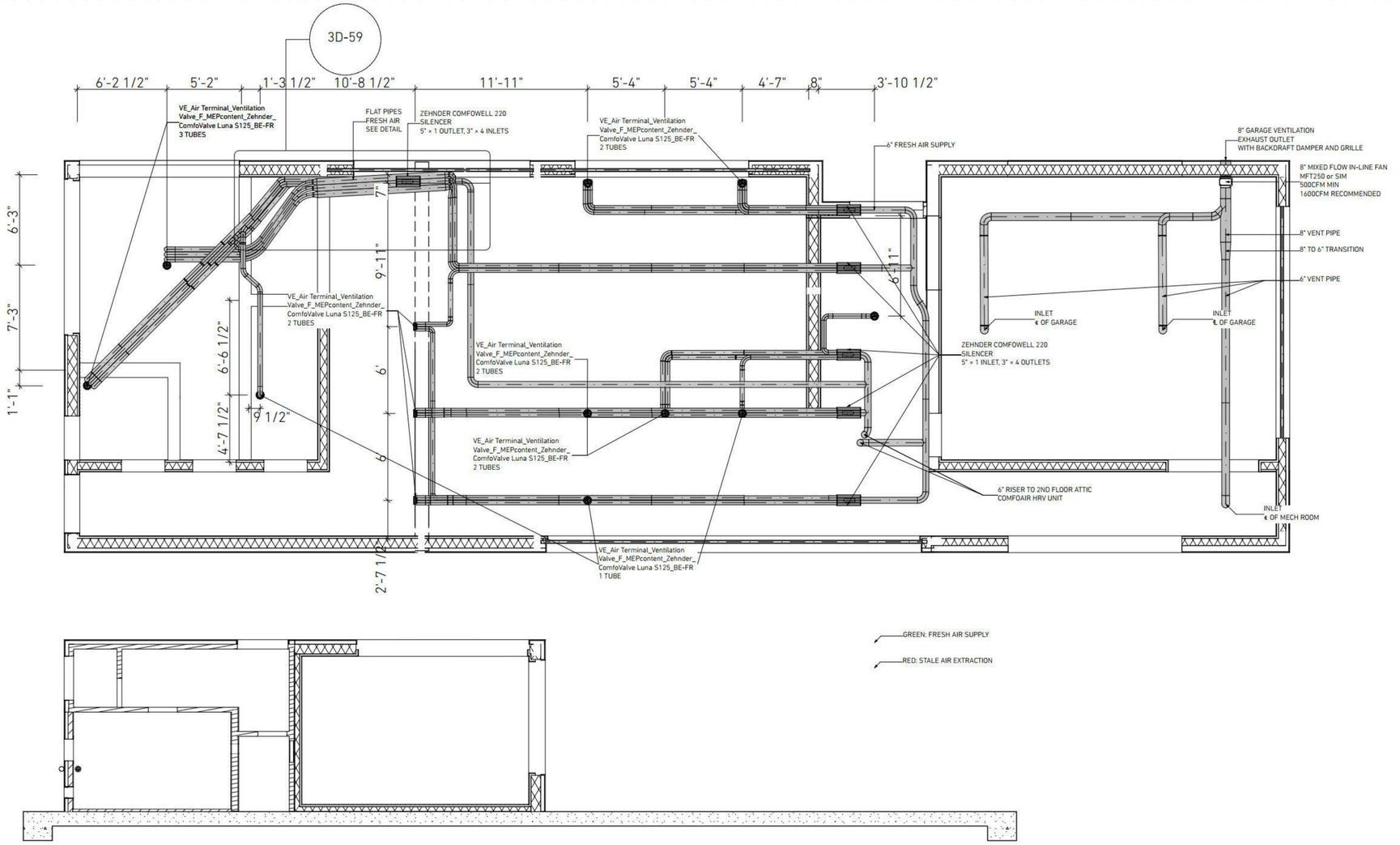

1. HRV GROUND FLOOR; GARAGE VENTILATION 1/4" = 1'-0"

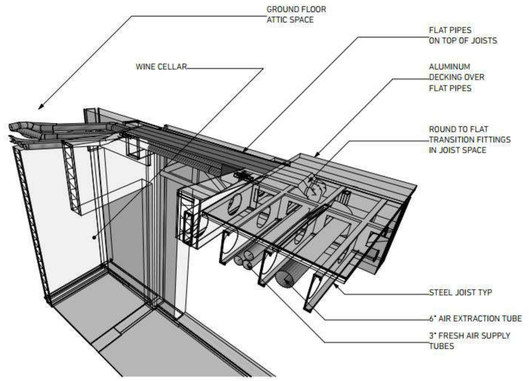

3D-59 HRV Tubes: transition from living room to GF Attic 1:2000

2F	Room	AREA FT2	CEILING HEIGHT ft	AIR VOLUME FT3	CFM Supply air	CFM Exhaust air
	Master bedroom	356.44	10.67	3802.03	20	
	Master bedroom				10	
	Master bathroom	165.65	10.67	1766.93		30
	Walk-in closet	63.95	10.67	682.13		10
	Laundry	23.67	10.67	252.48		10
	Luke's bedroom	262.06	10.67	2795.31	30	
	Luke's bathroom	47.12	10.67	502.61		24
	Regina's bedroom	260.57	10.67	2779.41	30	
	Regina's bathroom	47.12	10.67	502.61		24
	Corridor	266.98	10.67	2847.79		12
	Corridor					12
	Family room	477.61	16.27	7772.13	32	
	Total CFM 2F				**122**	**122**

GF	Bedroom	174.33	10.67	1859.52	24	
	Living	359.63	9.83	3536.36	36	
	Living				32	
	Bathroom	35	10.67	373.33		24
	Laundry	50.94	10.67	543.36		10
	Wine Cellar	38.62	10.67	411.95		
	Kitchen	468.4	11.51	5391.48		36
	Kitchen					36
	Foyer	167.05	11.51	1922.82		10
	Corridor	78.51	14	1099.14	24	
	Total CFM GF				**116**	**116**
	Total air volume ft3			**38,841.39**	**238**	**238**
	Air Changes per Hour (ACH)			**0.368**		

HRV ACH CALCULATION

GIST RD. SFR 1

APN544-23-041; PROPOSED ADDRESS: 20555 GIST RD, LOS GATOS, CA 95033

REVISION HISTORY

S3DA Structural & Architectural Design
4196 Adams Ave. San Diego CA 92116
(619) 404-0220

Mr. Nader Moavenian
nader.m@s3da-design.com

REGISTERED PROFESSIONAL ENGINEER BARRETT CROOK C 057199 Exp. 12-31-2021 CIVIL STATE OF CALIFORNIA

2-11-2020

1. The contractor must check all dimensions on-site before commencing work

2. These drawings are to be read in conjunction with all relevant designer, engineer or specialist drawings and specifications

3. The contractor is responsible for providing all necessary temporary support to the building and any adjacent structures

COUNTY APPROVAL STAMP

REVISION DATE
02/11/2020

DRAWING NAME
085 HRV layout. Ground floor

Drawing Scale

MEP-19

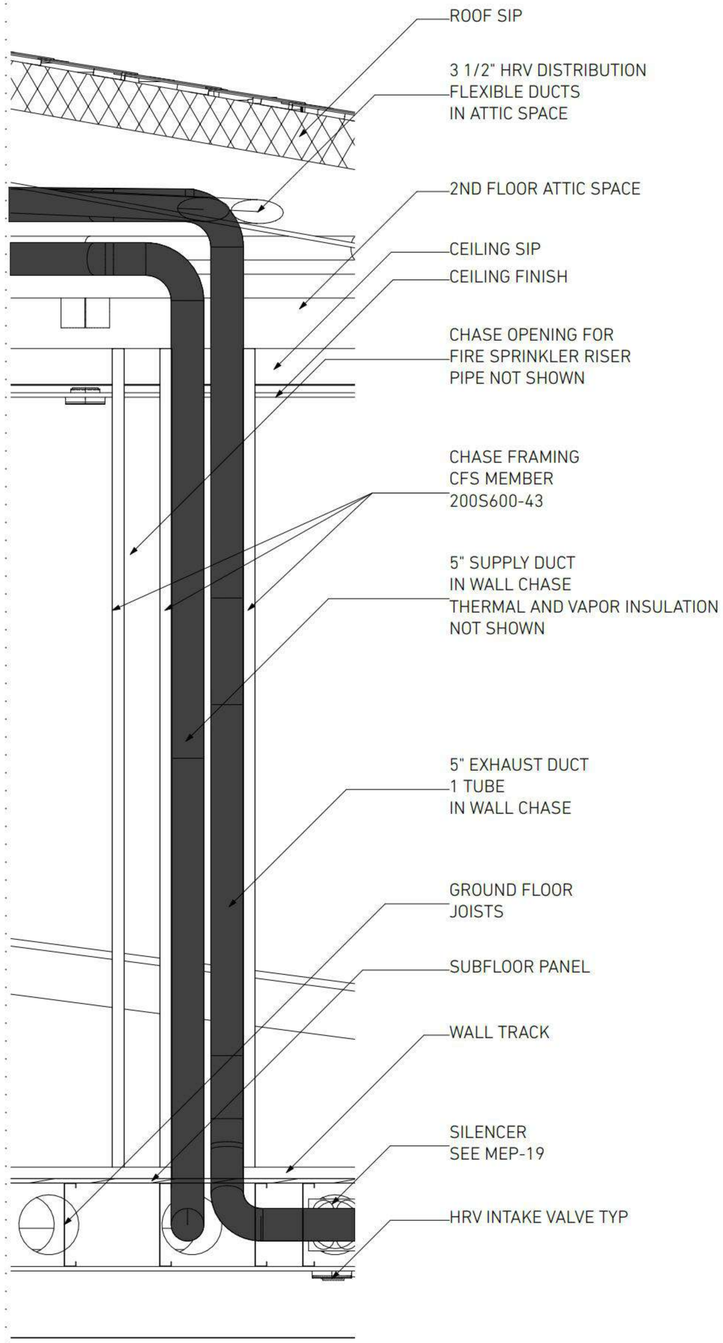

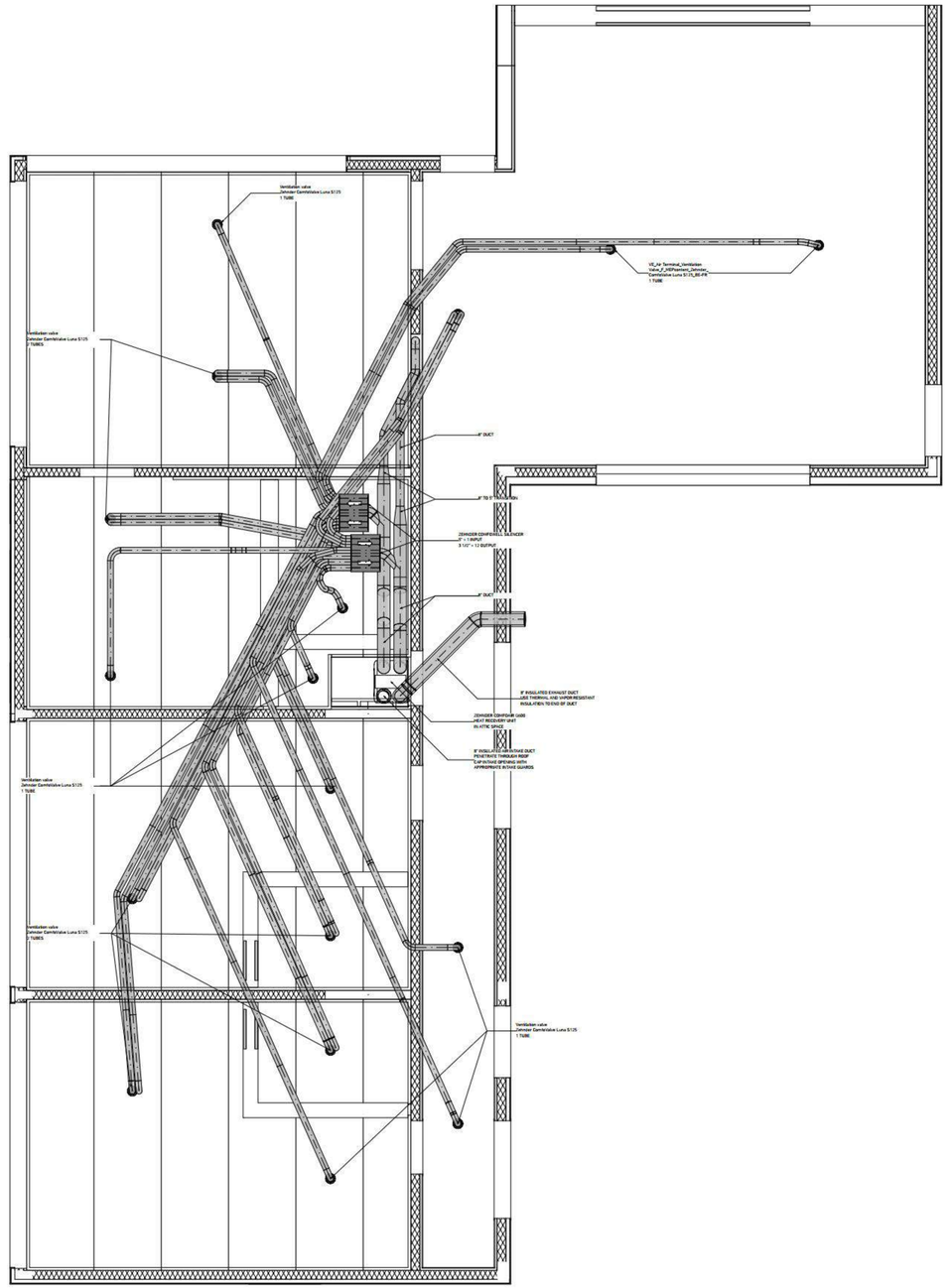

S-117

1" = 1'-0"

GIST RD. SFR 1

APN544-23-041; PROPOSED ADDRESS: 20555 GIST RD, LOS GATOS, CA 95033

REVISION HISTORY

S3DA Structural & Architectural Design
4196 Adams Ave, San Diego CA 92116
(619) 404-0220

Mr. Nader Moavenian
nader.m@s3da-design.com

REGISTERED PROFESSIONAL ENGINEER
BARRETT CROOKS
C 057199
Exp. 12.31.2021
CIVIL
STATE OF CALIFORNIA

2-11-2020

1. The contractor must check all dimensions on-site before commencing work

2. These drawings are to be read in conjunction with all relevant designer, engineer or specialist drawings and specifications

3. The contractor is responsible for providing all necessary temporary support to the building and any adjacent structures

COUNTY APPROVAL STAMP

REVISION DATE
02/11/2020

DRAWING NAME
086 HRV layout 2nd floor

Drawing Scale

MEP-20

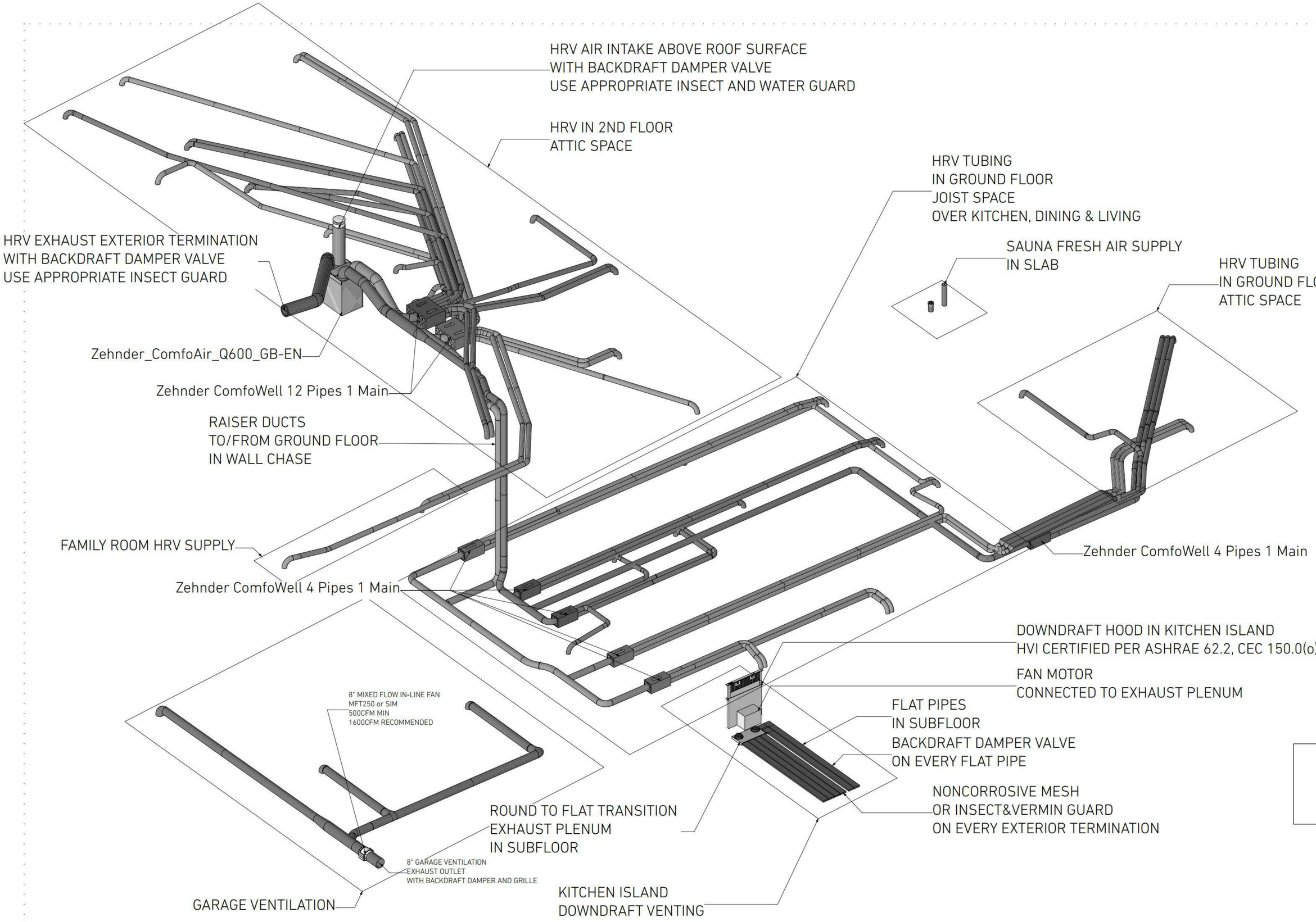

GIST RD. SFR 1

APN544-23-041; PROPOSED ADDRESS: 20555 GIST RD, LOS GATOS, CA 95033

REVISION HISTORY

S3DA Structural & Architectural Design
4196 Adams Ave. San Diego CA 92116
(619) 404-0220

Mr. Nader Moavenian
nader.m@s3da-design.com

REGISTERED PROFESSIONAL ENGINEER
BARRETT CROOK
C 057199
Exp. 12-31-2021
CIVIL
STATE OF CALIFORNIA
2-11-2020

1. The contractor must check all dimensions on-site before commencing work

2. These drawings are to be read in conjunction with all relevant designer, engineer or specialist drawings and specifications

3. The contractor is responsible for providing all necessary temporary support to the building and any adjacent structures

COUNTY APPROVAL STAMP

REVISION DATE
02/11/2020

DRAWING NAME
087 Ventilation & HRV isometric view

Drawing Scale

MEP-21

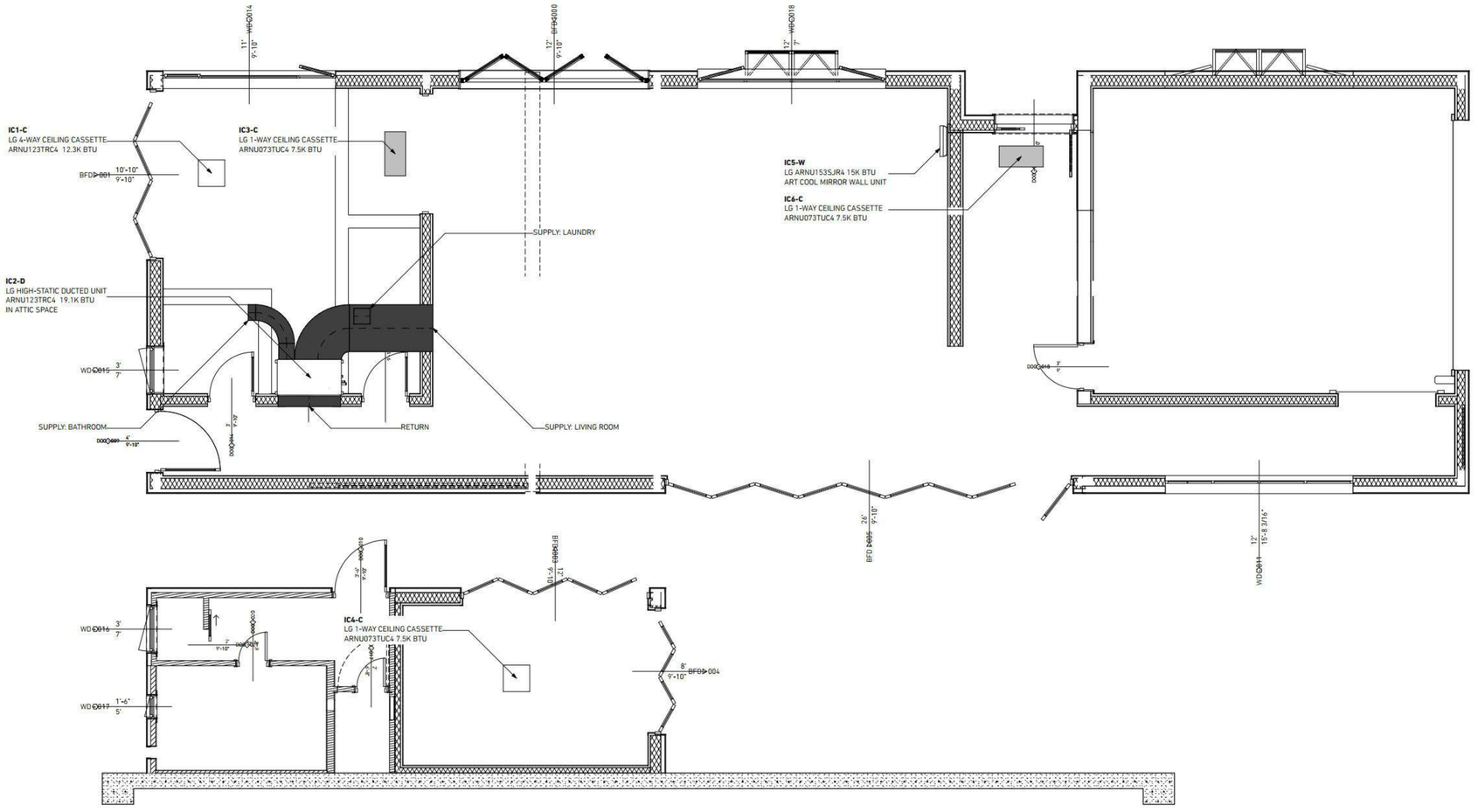

HVAC. Heat pump connected cooling/heating indoor units. Ground floor

HEAT PUMP CONNECTIONS

Internal HVAC Unit	BTU (K/hr)	Serves	Location of unit	Nomenclature on plan*
On Ground Floor				
ARNU123TRC4 4-way ceiling cassette	12.3	Pool bedroom	GF attic	IC1-C
ARNU183M2A4 DUCTED HIGH-STATIC	19.1	Living, laundry & bath	GF attic	IC2-D
ARNU073TUC4 One-way ceiling cassette	7.5	Wine cellar	GF attic	IC3-C
ARNU073TRC4 4-way ceiling cassette	7.5	Gym	Gym attic	IC4-C
ARNU153SER4 ART COOL MIRROR	15	Kitchen	Kitchen wall above fridge	IC5-W
ARNU123TUC4 One-way ceiling cassette	12.3	Hallway	Joist space above foyer entry	IC6-C
Total on Ground Floor	**73.7**			
On Second Floor				
ARNU123TRC4	12.3	Master bedroom	2F attic	IC7-C
ARNU073TRC4	7.5	Regina's bedroom	2F attic	IC8-C
ARNU073TRC4	7.5	Luke's bedroom	2F attic	IC9-C
ARNU153SER4 ART COOL MIRROR	15	Family room	2F wall above stairs	IC10-W
ARNH423K2A4	47.2	Hot water system	2F attic	HYDROKIT
Total on 2nd Floor	**89.5**			

*IC - internal cassette, C - ceiling, D - ducted, W - wall

GIST RD. SFR 1

APN544-23-041; PROPOSED ADDRESS: 20555 GIST RD, LOS GATOS, CA 95033

REVISION HISTORY

S3DA Structural & Architectural Design
4196 Adams Ave. San Diego CA 92116
(619) 404-0220

Mr. Nader Moavenian
nader.m@s3da-design.com

REGISTERED PROFESSIONAL ENGINEER BARRETT CROOK C 057186 Exp. 12-31-2021 CIVIL STATE OF CALIFORNIA

2-11-2020

1. The contractor must check all dimensions on-site before commencing work

2. These drawings are to be read in conjunction with all relevant designer, engineer or specialist drawings and specifications

3. The contractor is responsible for providing all necessary temporary support to the building and any adjacent structures

COUNTY APPROVAL STAMP

REVISION DATE
02/11/2020

DRAWING NAME
088 AC layout. Ground floor

Drawing Scale

MEP-22

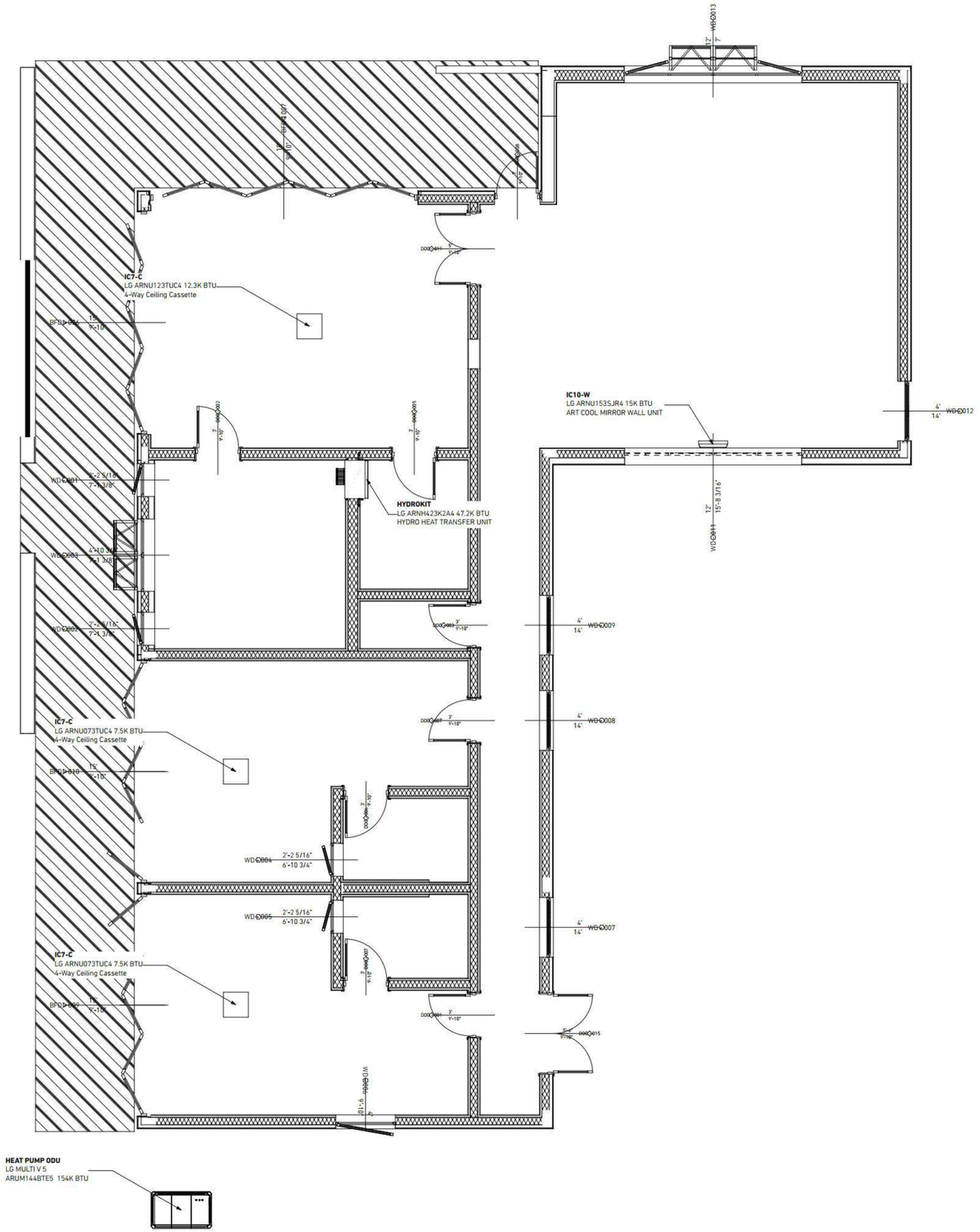

CMU WALL 11. TYPE A

HEAT PUMP CONNECTIONS

Internal HVAC Unit	BTU (K/hr)	Serves	Location of unit	Nomenclature on plan*
On Ground Floor				
ARNU123TRC4 4-way ceiling cassette	12.3	Pool bedroom	GF attic	IC1-C
ARNU183M2A4 DUCTED HIGH-STATIC	19.1	Living, laundry & bath	GF attic	IC2-D
ARNU073TUC4 One-way ceiling cassette	7.5	Wine cellar	GF attic	IC3-C
ARNU073TRC4 4-way ceiling cassette	7.5	Gym	Gym attic	IC4-C
ARNU153SER4 ART COOL MIRROR	15	Kitchen	Kitchen wall above fridge	IC5-W
ARNU123TUC4 One-way ceiling cassette	12.3	Hallway	Joist space above foyer entry	IC6-C
Total on Ground Floor	**73.7**			
On Second Floor				
ARNU123TRC4	12.3	Master bedroom	2F attic	IC7-C
ARNU073TRC4	7.5	Regina's bedroom	2F attic	IC8-C
ARNU073TRC4	7.5	Luke's bedroom	2F attic	IC9-C
ARNU153SER4 ART COOL MIRROR	15	Family room	2F wall above stairs	IC10-W
ARNH423K2A4	47.2	Hot water system	2F attic	HYDROKIT
Total on 2nd Floor	**89.5**			

*IC - internal cassette, C - ceiling, D - ducted, W - wall

GIST RD. SFR 1

APN544-23-041; PROPOSED ADDRESS: 20555 GIST RD, LOS GATOS, CA 95033

REVISION HISTORY

S3DA Structural & Architectural Design
4196 Adams Ave. San Diego CA 92116
(619) 404-0220

Mr. Nader Moavenian
nader.m@s3da-design.com

REGISTERED PROFESSIONAL ENGINEER
BARRETT CROOK
C 057199
Exp. 12-31-2021
CIVIL
STATE OF CALIFORNIA

2-11-2020

1. The contractor must check all dimensions on-site before commencing work

2. These drawings are to be read in conjunction with all relevant designer, engineer or specialist drawings and specifications

3. The contractor is responsible for providing all necessary temporary support to the building and any adjacent structures

COUNTY APPROVAL STAMP

REVISION DATE
02/11/2020

DRAWING NAME
089 AC layout. 2nd floor

Drawing Scale

MEP-23

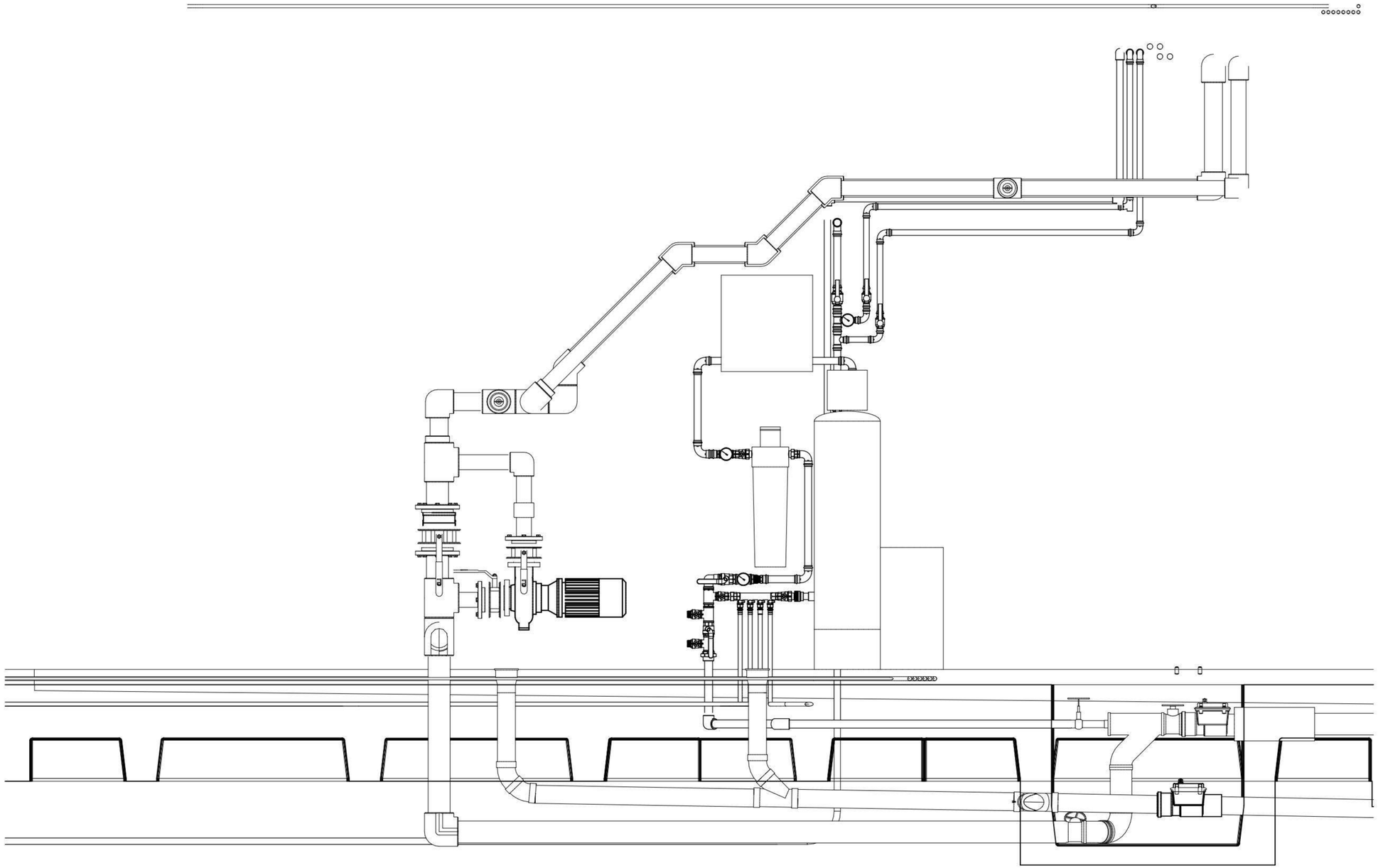

B-11 COLD WATER IN MECHANICAL ROOM 1:100

GIST RD. SFR 1

APN544-23-041; PROPOSED ADDRESS: 20555 GIST RD, LOS GATOS, CA 95033

REVISION HISTORY

S3DA Structural & Architectural Design
4196 Adams Ave. San Diego CA 92116
(619) 404-2220

Mr. Nader Moavenian
nader.m@s3da-design.com

REGISTERED PROFESSIONAL ENGINEER
NADER BARRETT CROCKETT
C 057196
Exp. 12.31.2021
CIVIL
STATE OF CALIFORNIA
2-11-2020

1. The contractor must check all dimensions on-site before commencing work

2. These drawings are to be read in conjunction with all relevant designer, engineer or specialist drawings and specifications

3. The contractor is responsible for providing all necessary temporary support to the building and any adjacent structures

COUNTY APPROVAL STAMP

REVISION DATE
02/11/2020

DRAWING NAME
090 Mechanical room equipment

Drawing Scale

MEP-24

RADON GAS RETARDER MEMBRANE

GENERAL

Construction to these standards will limit radon entry points through building floors, walls, and foundations and will limit mechanical depressurization of buildings, which can enhance radon entry. Structural radon barriers are primarily intended to stop the pressure-driven flow of soil gas through unsealed cracks and openings in the foundation and/or floor and into the building. Barriers can also be effective in controlling the diffusion of radon through materials and the emanation of radon from materials. An acceptable degree of redundancy and reliability is achieved only when these components are implemented as part of an integrated system of radon resistance as prescribed by this standard. All structures shall be isolated from the soil by an approved structural barrier as defined by the applicable portions of this standard. No crack, joint, duct, pipe, conduit, chase or other opening in the building foundation or floor shall be allowed to connect soil gas to a conditioned space or to the interior space of an enclosed space that is either adjacent to, or connected to, a conditioned space.

SOIL GAS-RETARDER MEMBRANE

Membrane Materials
Acceptable soil gas-retarder membranes shall consist of a single layer of polyethylene, not less than 0.006-inch (6 mils) thick with a maximum perm rating of 0.3. Polyvinyl chloride (PVC), ethylene propylene diene terpolymer (EPDM), neoprene or other non-deteriorating, nonporous material may be used instead of polyethylene, provided the installed thickness of the alternate material has greater or equal tensile strength, resistance to water-vapor transmission, resistance to puncture, and resistance to deterioration determined in accordance with ASTM E154. The membrane shall be placed to minimize seams and to cover all of the soil below the building floor.

Tape
Tape used to install the soil-gas retarder shall have a minimum width of 2 inches (51 mm) and shall be pressure sensitive vinyl or other non-deteriorating pressure sensitive tape compatible with the surfaces being joined. Paper tape and/or cloth tape shall not be used for these purposes. Only tape may be used to seal the soil-gas-retarder membrane within 24 inches (610 mm) of a soil-depressurization-system mat or pit.

Mastic
Mastic used to install the soil-gas retarder shall be compatible with the surfaces being joined, and shall be installed in accordance with the manufacturer's recommendations for the materials, surface conditions and temperatures involved. Mastic may be used to join sections of membrane to one another or to elements of the building foundation, or to seal penetrations in the membrane. Mastic must be kept at least 24 inches (610 mm) from any portion of a soil-depressurization-system mat or pit.

Installation
The soil-gas retarder shall be placed under the entire soil-contact area of the floor in a manner that minimizes the required number of joints and seams. Care shall be taken to prevent damage to the membrane during the construction process. In buildings incorporating the sub-slab portions of an active soil-depressurization system, the soil-gas retarder serves an important second purpose: to prevent mastic, cement or other materials from blocking the pressure distribution manifolds or pits.

Seams
Seams between portions of the soil-gas retarder shall maintain a minimum of 12 inches (305 mm) of lap when concrete is placed. This may be accomplished by securing the lapped edges of the membrane with tape or mastic or using larger unsecured overlaps prior to placing concrete.

Slab edges and joints
The soil-gas retarder shall fully cover the soil beneath the building floor. Where the slab edge is cast against a foundation wall or grade beam, the soil-gas retarder shall contact the foundation element, and shall not extend vertically into the slab more than one half of the slab thickness.

Penetrations
At all points where pipes, conduits, reinforcing bars or other objects pass through the soil-gas-retarder membrane, the membrane shall be fitted to within 1/2 inch (12.7 mm) of the penetration and sealed to the penetration. When penetrations occur within 24 inches (610 mm) of a soil-depressurization-system mat or pit, the gap between the penetrating object and the soil-gas retarder shall be taped closed. When necessary, to meet this requirement, a second layer of the membrane, cut so as to provide a minimum 12-inch (305 mm) lap on all sides, shall be placed over the object and shall be sealed to the soil-gas retarder with a continuous band of tape or mastic.

Punctures, cuts & tears
All damaged portions of the soil-gas-retarder membrane within 24 inches (610 mm) of any portion of a soil-depressurization-system mat or pit shall be sealed with tape or with a patch made from the same or compatible material, cut so as to provide a minimum 12-inch (305 mm) lap from any opening, and taped continuously about its perimeter.

Repairs
Where portions of an existing slab have been removed and are about to be replaced, a soil-gas-retarder membrane shall be carefully fitted to the opening, and all openings between the membrane and the soil closed with tape or mastic. Special care must be exercised to assure that mastic does not enter any portion of a soil-depressurization system located beneath the slab.

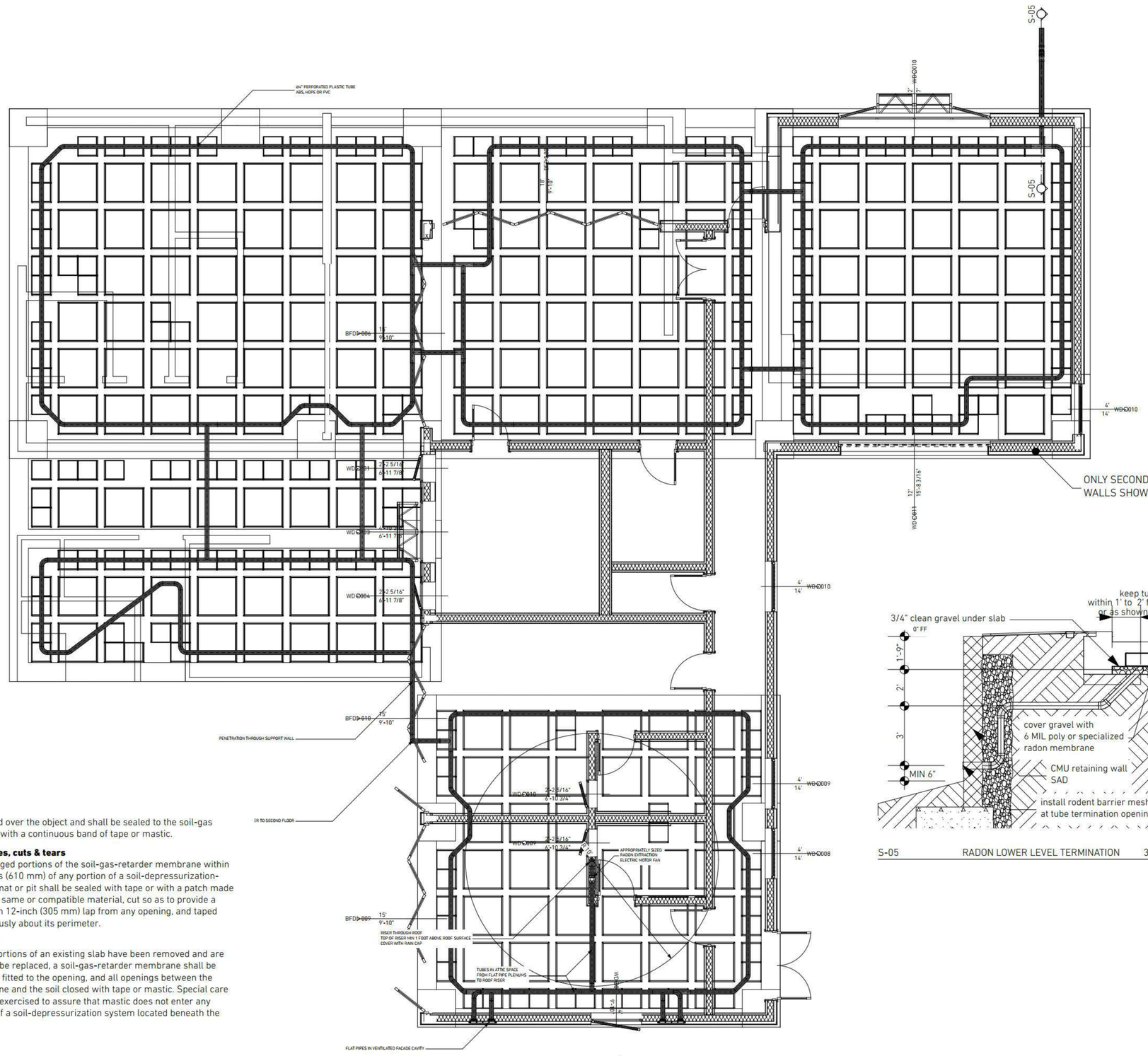

RADON EXTRACTION FLAT PIPES

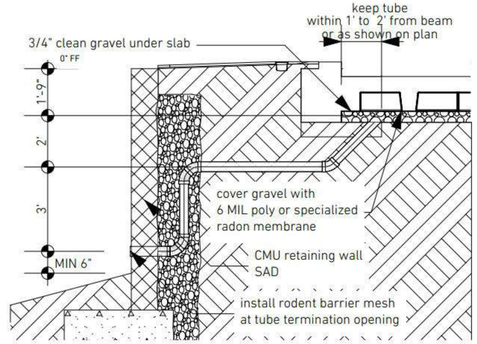

S-05 RADON LOWER LEVEL TERMINATION 3/8" = 1'-0"

GIST RD. SFR 1

APN544-23-041; PROPOSED ADDRESS: 20555 GIST RD, LOS GATOS, CA 95033

REVISION HISTORY

S3DA Structural & Architectural Design
4196 Adams Ave. San Diego CA 92116
(619) 404-2220

Mr. Nader Moavenian
nader.m@s3da-design.com

REGISTERED PROFESSIONAL ENGINEER
BARRETT CROOK
C 057196
Exp. 12/31/2021
CIVIL
STATE OF CALIFORNIA

2-11-2020

1. The contractor must check all dimensions on-site before commencing work

2. These drawings are to be read in conjunction with all relevant designer, engineer or specialist drawings and specifications

3. The contractor is responsible for providing all necessary temporary support to the building and any adjacent structures

COUNTY APPROVAL STAMP

REVISION DATE
02/11/2020

DRAWING NAME
091 Radon extraction system

Drawing Scale
1/4" = 1'-0"

MEP-25

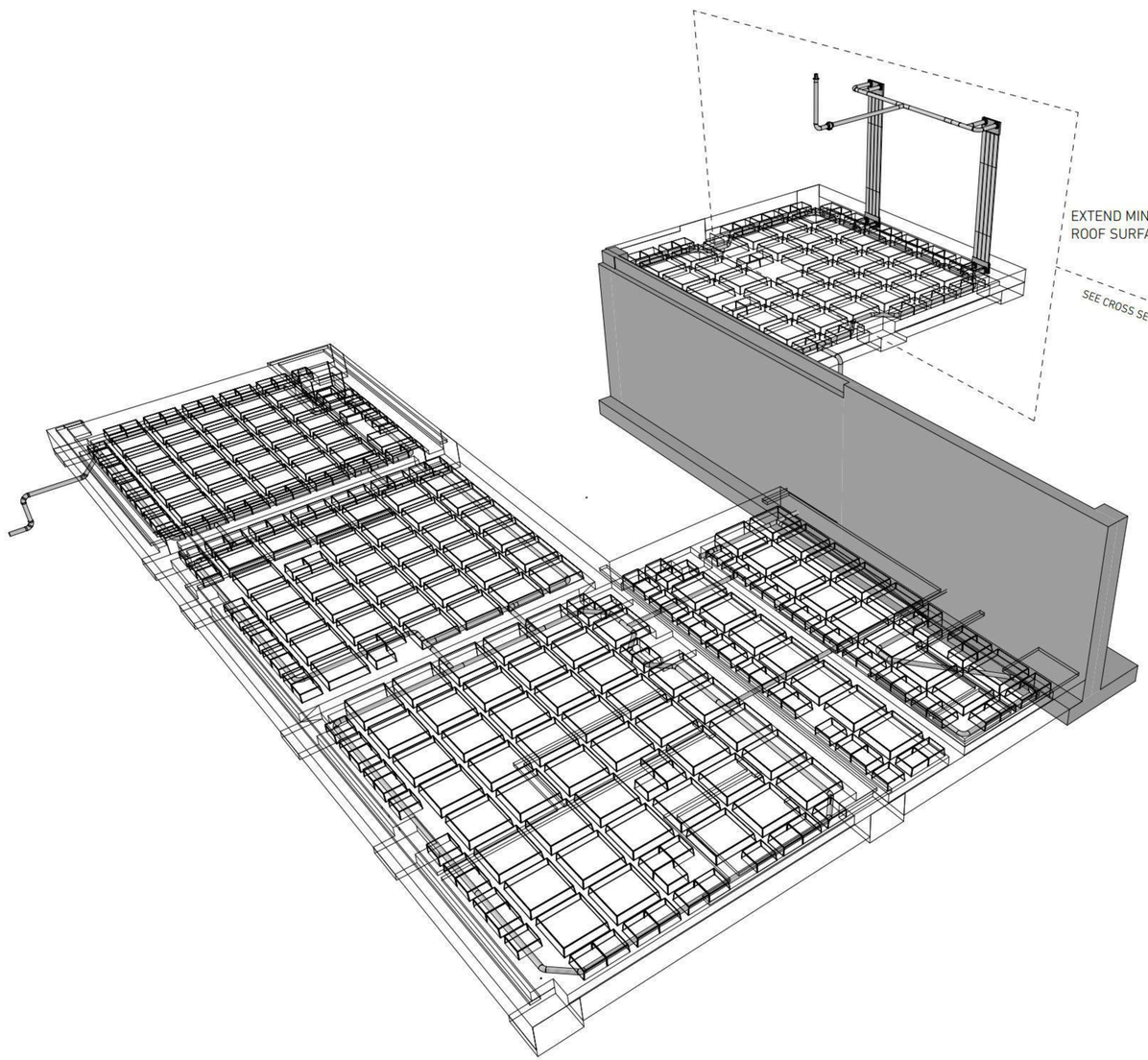

3D-28 RADON EXTRACTION ISOMETRIC PROJECTION 1:100

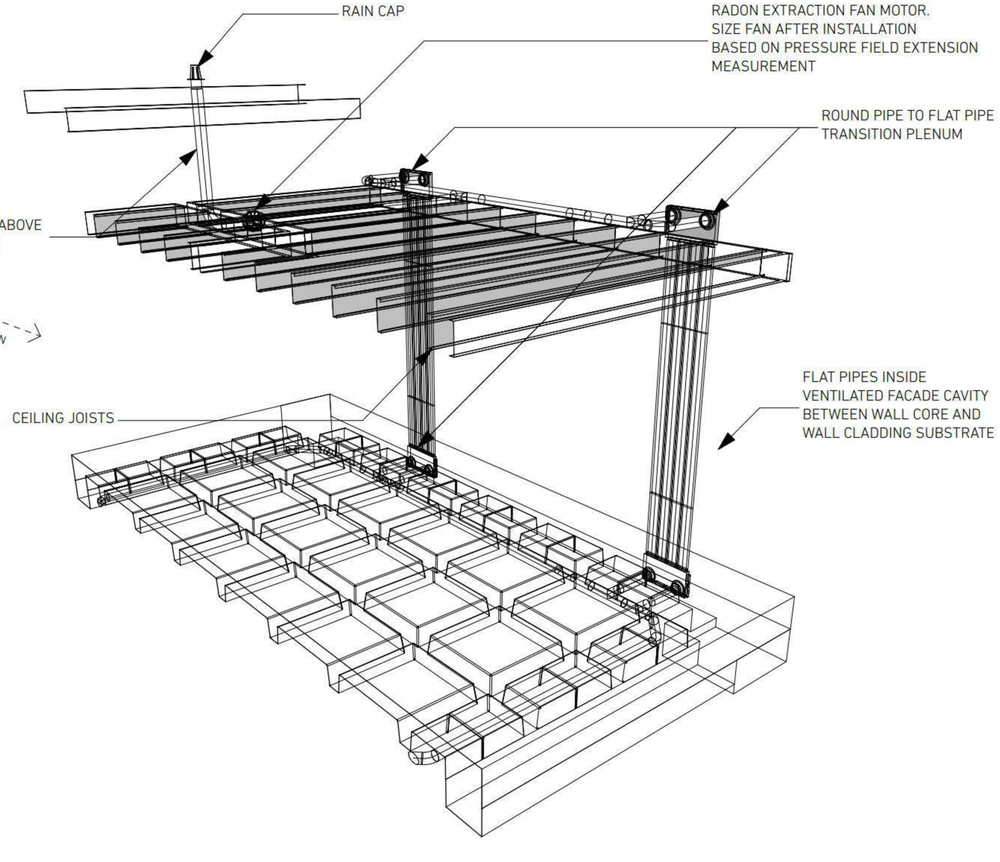

3D-27 RADON EXTRACTION TRANSITION TO ATTIC 1:100

Round to Flat Pipe Transition Plenum. NTS

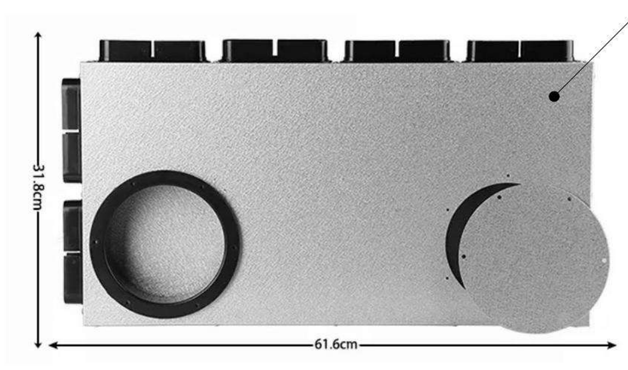

Plenum Dimensions NTS

Clamp for flat pipes NTS

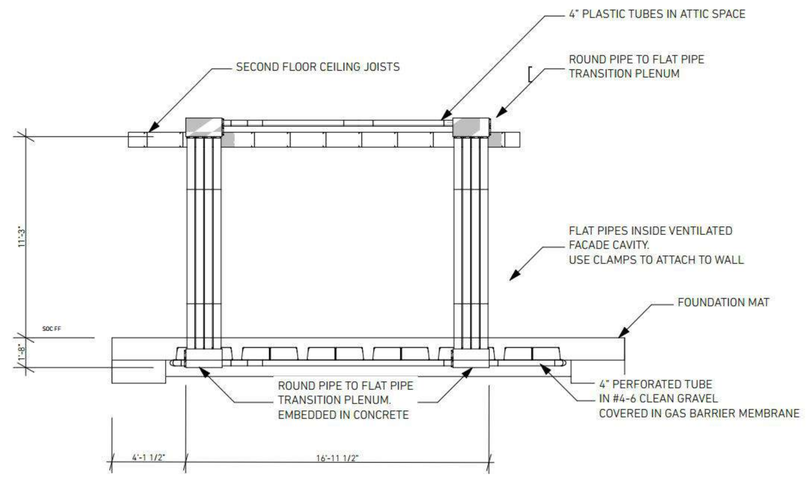

E-12 RADON EXTRACTION FLAT PIPES 1/4" = 1'-0"

GIST RD. SFR 1

APN544-23-041; PROPOSED ADDRESS: 20555
GIST RD, LOS GATOS, CA 95033

REVISION HISTORY

S3DA Structural & Architectural Design
4196 Adams Ave. San Diego CA 92116
(619) 404-0220

Mr. Nader Moavenian
nader.m@s3da-design.com

REGISTERED PROFESSIONAL ENGINEER
BARRETT CROOK
C 057199
Exp. 12-31-2021
CIVIL
STATE OF CALIFORNIA
2-11-2020

1. The contractor must check all dimensions on-site before commencing work

2. These drawings are to be read in conjunction with all relevant designer, engineer or specialist drawings and specifications

3. The contractor is responsible for providing all necessary temporary support to the building and any adjacent structures

COUNTY APPROVAL STAMP

REVISION DATE
02/11/2020

DRAWING NAME
092 Radon extraction system. Isometric views & details

MEP-26

STRUCTURAL NOTES

GENERAL

1. All work shall be in conformance with the 2019 California Building Code (CBC) or newer code if applicable as adopted by the local governing agency, and any applicable local ordinances. Residential work shall be in conformance with the 2019 California Residential Code (CRC) or newer code if applicable.
2. All conditions and dimensions shown on the plans shall be verified by the Contractor, any discrepancies that require clarification or revisions shall be brought to the attention of the Architect/Engineer before commencing with the work.
3. Contractor shall provide the requirements of all structural detail callouts denoted as "TYPICAL" or "TYP" at specifically noted conditions and at all like conditions throughout the project, unless otherwise noted. All details on detail sheets titled as "TYPICAL", and not directly referenced on plans, shall be incorporated at occurring locations throughout the project. Requirements of details not denoted or titled as "TYPICAL" shall be provided at the specific location shown on the plan and adjacent areas as applicable. Requirements of details denoted as "SIMILAR" or "SIM" shall be provided with differences as indicated or implied on referenced details and plans.
4. Details may be depicted diagrammatically. For example, roof pitches, floor/roof/wall thicknesses, framing members, etc., may differ in scale from actual proposed conditions. Details shall be understood in context with other drawings conveying structural and architectural design intent.
5. Structural design or review of temporary shoring, additional reinforcing, bracing, formwork, scaffolding, erection methods, etc. required for proper construction of the project shall be the responsibility of the Contractor.
6. See Architectural Drawings for wall locations and dimensions, unless otherwise noted. Drawings shall not be scaled.
7. See Architectural Drawings for all flashing, waterproofing, finishes and venting requirements.
8. Refer to architectural plans for finish floor elevations, floor depressions, openings, slopes, drains, curbs, pads, embedded items, non-bearing partitions, stairs, etc. Refer to civil, mechanical and electrical plans for utilities, sleeves, pipes, ducts, equipment, etc.
9. Shop drawings are an aid for field placement and are superseded by the structural drawings. It shall be the responsibility of the General Contractor to make certain that all construction is in full agreement with the latest approved contract documents.
10. Dimensions, unless otherwise shown, are to centerline of columns and beams, or to the face of concrete surfaces and rough framing.
11. All referenced publications shall be the latest edition, unless otherwise noted. The structural drawings and specifications represent the finished structure, and, except where specifically shown, do not indicate the method or means of construction. The Contractor shall supervise and direct the work and shall be solely responsible for all construction means, methods, procedures, techniques, safety and sequence.

SPECIAL INSPECTION

1. GENERAL
   - A. In addition to the inspections required by Section 110 of the CBC, the Owner shall employ a Special Inspector during construction on the types of work indicated below. All special inspection shall be performed in accordance with Section 1704 of the CBC.
   - B. Inspections: Special inspections that are required by the building codes, local building departments, or these plans shall be performed by the firm noted in "SCOPE OF WORK" below.
2. SPECIAL INSPECTOR DUTIES
   - A. After due notice from the Contractor, provide qualified personnel as necessary.
   - B. Perform inspections as follows:
     - i. Perform specified reviews, inspections, sampling and testing of materials as indicated below.
     - ii. Verify conformance of all special inspected work with the approved plans.
     - iii. Verify that the work complies with specified standards and methods of construction.
     - iv. Ascertain compliance of materials with requirements of the approved plans.
   - C. Promptly notify Architect and Contractor of observation irregularities or deficiencies within one working day. If irregularities or deficiencies are uncorrected, the Special Inspector shall notify the Architect and the governing agency.
   - D. Promptly submit written report of each test and inspection with a copy each to the Architect, Engineer, Owner, Contractor, Governing Agency and other designated persons within three working days. Each report shall include:
     1. Date Issued.
     2. Project title and number.
     3. Testing laboratory name, address phone number.
     4. Name and signature of laboratory test or inspection.
     5. Date and time of sampling, test or inspection.
     6. Type of inspection or test.
     7. Location of sample or test in the project.
     8. Test results.

     Report shall indicate compliance or noncompliance with approved details and plans.
   - E. In addition to the required reports above, the Special Inspector shall submit a final signed report stating whether the work requiring special inspection was, to the best of his knowledge, in conformance with the approved plans and the applicable provisions of the California Building Code.
3. SCOPE OF WORK (By: Special Inspector Company/Firm)
   - A. Grading. Drainage. Excavation, and Fill By: Modern Technology Resources Inc. During earthwork excavations, drainage installation, grading and filling operations.
   - B. Foundation Excavations By: Modern Technology Resources Inc.
   - C. During excavation of drilled piers and/or footings by: Modern Technology Resources Inc.
   - D. Reinforcing Steel By: Owners' Testing Laboratory. Inspection of all reinforcing steel prior to closing of forms and prior to concrete delivery. EXCEPTION: Slab on grade.
   - E. Concrete By: Owners Testing Laboratory. During the taking of compression test specimens, slump test and placing of all reinforced concrete and pneumatically placed concrete. EXCEPTION: Non-structural slab-on-grade and spread footing foundations.
   - F. Post-Tensioned Slab By: Owners' Testing Laboratory. Inspection of all reinforcing steel, strand placement, and strand tensioning. (See above for concrete.)

POST-TENSIONED FOUNDATION / SITE WORK

1. GEOTECHNICAL REPORT/SITE WORK:
   - A. All site work, drainage systems, foundations and other soil considerations shall conform to the recommendations of the geotechnical report and any subsequent recommendations made by the Geotechnical Engineer of record.

GEOTECHNICAL ENGINEER: Modern Technology Resources, Inc.
TITLE: Aurum Residence
PROJECT #: 2019-501

   - B. Geotechnical Engineer shall review and approve site plans, foundation plans, and foundation details for conformance with design intent of geotechnical report prior to all site work. A copy of the approval letter shall be sent to both the Building Department and owner prior to foundation construction.
     - i. See geotechnical report for all grading, fill placement and building pad preparation requirements.
     - ii. Fill placement shall be observed by the Geotechnical Engineer.
     - iii. The Geotechnical Engineer shall prepare compaction test results of the compacted soil in order to provide a professional opinion as to conformance of the grading with the recommendations of the geotechnical report.
     - iv. Geotechnical Engineer shall review and approve pad preparation prior to placement of forms and reinforcing.
   - C. DESIGN PARAMETERS PER GEOTECHNICAL ENGINEER

   Bearing capacity for mat foundation (dead + live): 2,000 psf
   Total load for mat foundation, including wind and seismic: 3,000 psf.
2. MATERIALS
   - A. Concrete
     - i. Concrete for post-tensioned foundations shall have a minimum compressive strength of 4500 psi at 28 days. A minimum of three (3) test cylinders shall be taken to determine concrete compressive strength.
     - ii. Concrete for post-tensioned foundations shall be normal weight with 1-1/2" maximum size aggregate and a 4"±1" slump. Water to cement ratio shall not exceed 0.45
     - iii. Cement shall be Type I.
     - iv. Concrete for miscellaneous landings, stoops, driveways, etc. that are not part of the post—tensioned foundation shall have a minimum compressive strength of 3000 psi at 28 days and as specified in section 1904 of the CBC.
     - v. Calcium chloride, or any other corrosive additive, shall not be permitted in any concrete or grout.
   - B. Reinforcing Steel
     - i. Reinforcing steel shall conform to ASTM A 615, (including supplement SI), grade 60 for #5 bars and larger and grade 40 for #4 bars and smaller. Steel shall be kept clean and free of rust scales.
     - ii. Reinforcing to be welded shall be ASTM A 706, grade 60
     - iii. Electrodes for welding reinforcing shall be SMAW: E90XX low hydrogen.
     - iv. Smooth dowels shall be new plain billet steel conforming to ASTM A 615 (including supplement SI), grade 40 for 1/2" diameter, grade 60 for 5/8" diameter and larger.
     - v. Welded wire fabric shall conform to ASTM A 185, and shall be lapped 9" minimum at splices.
   - C. Post-Tensioning Strands
     - i. Post-tensioning strands shall be seven-wire, low relaxation strand for pre-stressed concrete, manufactured in accordance with ASTM A 416 grade 270 KSI and free from corrosion. Strands shall have a minimum guaranteed ultimate tensile strength of 41,300 pounds and shall comply with the following:

a.	Nominal Diameter	1/2"
b.	Nominal Area	0.153 in^2
c.	Modulus of Elasticity	28,500 KSI
d.	Ultimate Strength	41.3 KIPS
e.	Maximum Temporary Force	33.0 KIPS
f.	Anchorage Force	28.9 KIPS
g.	Final Effective Pre-stress	26.8 KIPS

     - ii. Strands shall be coated with rust preventive grease and enclosed in a seamless extruded plastic sheathing. Torn or damaged sheathing shall be taped before concrete pouring. All exposed tendons shall be taped.
   - D. Post-Tensioning Anchorages
     - i. Post-tensioning anchorages shall meet the minimum requirements set forth in the "Building Code Requirements for Structural Concrete" ACI 318, latest adopted edition, Chapter 18. Contractor to provide Manufacturer's name and latest ICC report.
     - ii. Fixed-end (i.e. "dead-end") anchorages shall be pre-attached to strands by product manufacturer.
3. PLACING OF TENDONS AND ANCHORAGES
   - A. Stressing ends and dead ends of tendons may be reversed from those shown on the plans.
   - B. Mark location of the center of tendons on edge form based on the FOUNDATION PLAN and drill a 3/4" diameter hole in edge form at the stressing end locations, half the slab thickness down from the top of slab elevation, unless otherwise noted.
   - C. Secure all stressing end anchorage castings and pocket formers to the perimeter form before uncoiling of the strand.
   - D. Lay all tendons in one direction, and then lay all tendons in the perpendicular direction. Referring to the plan, select individual color-coded coils of tendons and unroll them in place, beginning at the fixed-end, if such fixed-end exists. At least 16" of strand must extend beyond the edge form at each stressing end. Care shall be exercised when tied tendons are uncoiled to not damage coils or cause injury to workers.
   - E. Affix fixed-end anchors to edge forms with two 20d ring shank nails, maintaining 1-1/2" clear from outside face of anchor to inside face of edge form to provide adequate concrete coverage of fixed-end anchor. Face of anchor shall be parallel to face of slab edge surface, unless tendon layout indicates otherwise. At the fixed-end, the strand should have approximately 3/4" of concrete coverage. The stressing ends are left draped over the top edge of side forms during nailing of the dead ends.
   - F. Securely nail the stressing end anchors with pocket formers to the edge form with two 20d ring shank nails such that pocket formers seat tight and flush to the edge form and the face of anchor is parallel to outside face of slab edge.
   - G. At stressing ends, remove tendon sheathing to approximately 6" inside the edge form. No more than 1" of bare strand shall be exposed behind the anchor. Do not remove grease. Slide end of strand through the hole in the anchor, pocket former and edge form.
   - H. Fixed-ends that occur at "floating" forms (for change of levels in slab heights, or other cases) shall not be attached to "floating" forms but instead held securely in place by attachment to steel reinforcing bars.
   - I. At conditions where both ends of tendon are stressing-ends, 16" length of cable shall be left exposed outside of each edge form to allow for proper attachment and operation of jacks.
   - J. Straighten tendons, curving them smoothly around holes or obstructions per typical details. Avoid sharp bends and transitions.
   - K. Place plastic support chairs at cable intersections such that tendons are located at mid-depth of slab. Place additional plastic chair supports mid—way between intersections where the spacing between intersections exceeds 4'-6" (3'-0" where 3/8" diameter strand used).
   - L. Check strands for tears in plastic sheathing and tape all tears.
   - M. Tendon supports shall have adequate bearing surface to maintain position during placement of concrete.
4. PLACING OF REINFORCING AND CONCRETE
   - A. Reinforcing bars shall be in lengths as long as practicable. Reinforcing bars requiring bending in the field shall be "cold bent" with proper radius per relevant detail. At corners and intersections bars shall return a minimum of 18". Provide minimum laps at all reinforcing bar splices per detail.
   - B. Minimum reinforcing steel cover requirements:
     - i. Cast against and exposed to earth: 3"
     - ii. Formed surfaces: 2"
   - C. Contractor shall verify all locations of bolts, hold down anchors, etc., with architectural and structural plans prior to commencing work.
   - D. Reinforcing, anchor bolts and inserts shall be rigidly held in place prior to placing concrete.
   - E. All concrete shall be poured monolithically as shown on drawings, unless otherwise noted, and thoroughly mechanically vibrated. Consolidation of concrete at anchorages is critical.
   - F. CURING
     - i. Exposed surfaces of concrete shall be properly cured in a moist condition at a temperature above 50 degrees Fahrenheit. Exposed concrete shall be thoroughly wetted as necessary to maintain surface in a moist condition.
     - ii. For curing of concrete cast and finished flat, cure by one of the following methods for a minimum of seven (7) days U.O.N.
       1. Burlap: Cover concrete with wet burlap as soon as it can be placed without marking the surface. Keep the burlap continuously wet and in place during the curing period
       2. Cure/Sealer: Verify that other finishes will not be affected by cure/sealer compound. Cure/sealer shall be a high-solids type with a maximum moisture loss of 0.55kg/m^2 at coverage of 200 ft^2/gal. Upon completion of finishing, apply an approved cure/sealer to flatwork per manufacturer's instructions.
   - G. Where sand layer over vapor barrier is specified on plans, Contractor shall dampen the sand just prior to concrete placement.
5. PREPARATION FOR STRESSING
   - A. Remove pocket former. Check inside each pocket hole, making certain that the anchorage cavity is clear. If concrete residue, foreign matter, or a film of cement paste has intruded, remove it completely.
   - B. Outside face of slab edge shall be properly cleaned for proper movement and fitting of hydraulic jack.
   - C. Anchorage cavity and surface for jack shall be examined for any honeycombing, cracking, voids or any other abnormalities. If any such conditions are found, stressing shall not commence until repairs have been properly completed.
   - D. Confirm that tendons are perpendicular to the slab edge face and anchorage surface is parallel to slab edge face (unless using an angled anchorage as directed by plan). Do not stress concrete until any problems are remedied.
   - E. Clean tendon tails of excess corrosion inhibiting coating, dirt, sand, or concrete slurry to prepare tendon tail to be gripped and marked by the jack.
   - F. With a hand tool, seat proper sized wedge halves on clean tendon tail. The light coating of oil on wedges shall not be removed. Orient wedge halves to align properly with the seating plunger of the stressing jack to properly engage both wedge halves during stressing operation.
   - G. Place an obvious and accurate mark, by marker or spray paint, on the strand at a constant reference dimension from the slab edge. If stressing is to occur at both ends of tendon, both ends shall be marked before stressing occurs.
6. STRESSING OF TENDONS
   - A. Tendon stressing shall occur as soon as possible after the concrete has reached a compressive strength of 3000 psi. Stressing should occur between three and ten days after concrete placement unless sufficient strength is not met.
   - B. The stressing of tendons is a potentially dangerous operation. The stressing operator must be a person qualified in stressing operations and must exercise careful checking and rigid control of all operations. Inexperience, improper procedures and poor quality control may result in life safety hazards.
   - C. Do not stand behind or over the equipment during stressing operations. Operators shall utilize a remote switch for jack operation, located at a safe distance from equipment.
   - D. Equipment utilized for stressing tendons shall be recognized by tendon and anchorage manufacturer as acceptable equipment. Hydraulic jacks shall be equipped with accurate, calibrated hydraulic pressure gauges and a calibration chart shall accompany each jack. Gauges shall be clearly visible by and face the jack operator. Do not read gauges from the side or obliquely.
   - E. Inspection personnel shall be on site to measure elongations concurrently with stressing operations. Actual elongation measurements shall be taken during stressing operation and measurements shall be compared to expected calculated elongations. Elongation measurements shall be made to an accuracy of 1/8". If variations greater than 10% between actual and expected elongations are encountered, stressing shall cease until the cause of the discrepancy is determined. On double end-stressing tendons add the elongation of end together to obtain the total elongation. Tendons less than 20 feet in length result in small calculated elongations. For such lengths, the ten percent tolerance may be too stringent due to inaccuracies in the marking and measuring process.
   - F. Proceed with jack attachment, startup procedures, and jack operation according to the jack manufacturer's instructions. When proper pressure has been achieved, the seating plunger is engaged, and the jack will start to retract.
   - G. Stress strand to 33 KIPS.
   - H. Just before the jack is fully retracted, stop the pump and switch the valve back to the stressing position. The seating plunger should retract. Stop the jack before the jack is fully retracted to avoid excessive pressure buildup in the jack after it has completely returned. This excessive pressure buildup can cause premature failure of the jack seals, hoses and fittings.
   - I. Slide the jack forward to disengage the jack grippers and remove the jack from the tendon tail.
   - J. If the calculated elongation is larger than the stroke of the jack, additional pulls will be required. Care should be taken not to over pressure the jack after the cylinder is completely extended. When using an 8" stroke jack, try to leave approximately 5" for the final pull. This will help keep the pressure as low as possible on the anchor wedges during the initial strokes.
   - K. After tendon stressing, the adjacent concrete shall be marked to indicate the tendon has been tensioned.
   - L. Stressing records shall be kept on the project and shall show the gauge pressure used and the elongation achieved for each tendon that is stressed.
7. TENDON FINISHING
   - A. Proper protection of the entire post-tensioning system is important to provide long-term performance and durability of the foundation system. The pocket former recesses shall be properly sealed to protect the tendon tail and anchorage.
   - B. The tendon tails shall be cut as soon as possible after stressing, but only after approval has been received from the Engineer or Special Inspector for the submitted stressing records report.
   - C. The tendon tail shall be cut back from the face of the slab edge a distance of 1 inch. Tails may be cut with an oxyacetylene torch, an abrasive wheel, gas or electric saw, or hydraulic shears. If flame cutting is utilized, care shall be taken to not apply heat directly to the wedges.
   - D. If an approved plastic protection cap and sealer is placed over the cut tendon tail, the grout coverage may be reduced to 1 /8" over the cap. The cap shall be of sufficient length to provide a distance of one inch minimally from the outside face of the slab edge surface to any exposed surface of the tendon cable not surrounded by the protection cap.
   - E. The pocket recesses shall be cleaned of foreign or loose material that would inhibit a good bond between the concrete and the grout. A bonding agent can be used to enhance the bond of the grout to the concrete.
   - F. The pocket former recesses shall be filled with grout to eliminate all voids and finished to match surrounding slab edge, immediately after the tendon tails have been cut.
   - G. The grout material shall be a non-shrink grout and attain the same minimum compressive strength as the concrete slab. Under no circumstances shall the grout used for filling the recesses contain chlorides or other chemicals known to be deleterious to pre-stressing steel. If an encapsulated system is used, follow the post-tensioning material supplier's recommendations for cutting and grouting.

ABBREVIATIONS

∠ or L.	Angle
@	At
A.B.	Anchor Bolt(s)
ABV	Above
AC	Asphaltic Concrete
ADDL	Additional
ADJ	Adjacent
AFF	Above Finish Floor
ALT	Alternate
APA	American Plywood Association
APRX	Approximate
ASTM	American Society for Testing and Materials
A.T.R.	All-Threaded Rod
AYC	Alaska Yellow Cedar
BFF	Below Finish Floor
BLDG	Building
BLK	Block or Blocking
BLW	Below
BM	Beam
BOT	Bottom
BRG	Bearing
BTWN	Between
CANT	Cantilever
CBC	California Building Code
C.J.	Control Joint
CL or ℄	Centerline
CLG	Ceiling
CLR	Clear
C.M.U.	Concrete Masonry Unit
COL	Column
COLL	Collector
COMB	Combination
CONC	Concrete
COND	Condition
CONN	Connection
CONST	Construction
CONT	Continuous
C.P.	Complete Penetration
CSK	Countersink
d	Penny (nail size)
DBL	Double
DET	Detail
D.F.	Douglas Fir
DIA or ⌀	Diameter
DIAG	Diagonal
DIM	Dimension
DL	Dead Load
D.T.	Drag Truss
DWG	Drawing
(E)	Existing
EA	Each
E.B.	Expansion Bolt
E.E.	Each End
E.F.	Each Face
ELEC	Electrical
EL or ELEV	Elevation
Δ or ∂	Elongation
EMB	Embed or embedment
E.N.	Edge Nail
ENGR	Engineer
E.O.R.	Engineer of Record
EQ	Equal or Equivalent
E.S.	Each Side
E.W.	Each Way
EXT	Exterior
FDN	Foundation
FLR	Floor
FF EL	Finish Floor Elevation
FIN GR	Finish Grade
FHMS	Flat Head Machine Screw
FHWS	Flat Head Wood Screw
F.J.	Floor Joist
F.N.	Face Nail
F.O.C.	Face of Concrete
F.O.P.	Face of Post
F.O.S.	Face of Stud
F.O.H.C.	Free of Heart Center
FRMG	Framing
F.S.	Far-Side
FT	Foot / Feet
FTG	Footing
GA	Gauge or Gage
GALV	Galvanized
F. I.	Galvanized Iron
GLB	Glu-Laminated Beam
GR.BM.	Grade Beam
G.T.	Girder Truss
GYP BD	Gypsum Board
H.D.G.	Hot-Dipped Galvanized
HDR	Header
HGR	Hanger
HORIZ	Horizontal
H. S.	High Strength
HSS	Hollow Structural Section
HT	Height
IBC	International Building Code
ICC	International Code Council
I.C.F.	Insulated Concrete Form(s)
I.D.	Inside Diameter
I.F.	Inside Face
INFO	Information
INT	Interior
JST	Joist
JT	Joint
K	KIP(S) (1000 lbs)
KD	Kiln Dried
K.P.	King Post
LBS or #	Pounds
LG	Long
L. L.	Live Load
L.L.H.	Long Leg Horizontal
L. L.V.	Long Leg Vertical
LOC	Location(s)
MAX	Maximum
M.B.	Machine Bolt(s)
MBM	Metal Building Manufacturer
MFR	Manufacturer (Manufactured)
MIW	Malleable Iron Washer
MIN	Minimum
MISC	Miscellaneous
MTL	Metal
(N)	New
N/A	Not Applicable
N.I.C.	Not In Contract
NO. or #	Number
N.S.	Non-shrink (or Near—Side)
N.T.S.	Not to Scale
O/	Over (On)
O.C.	On Center
O.D.	Outside Diameter
O.F.	Outside Face
O.H.	Opposite Hand
OPNG	Opening
OPP	Opposite
OPT	Optional
O.S.B.	Oriented Strand Board
PHSMS	Pan Head Sheet Metal Screw
PARL	Parallel
PERP	Perpendicular
P.D.F.	Powder Driven Fastener
PERF	Perforated
PL	Plate
PLY	Plywood
P.P.	Partial Penetration
P.L.F.	Pounds Per Lineal Foot
P.S.I.	Pounds Per Square Inch
P.S.F.	Pounds Per Square Foot
P.T.	Preservative Treated
P-T	Post-Tension(ed) (ing)
(#)	Quantity (Number of items)
R	Radius
REINF	Reinforcing
RET	Retaining
REQD	Required
REV	Revision
R.O.	Rough Opening
RHMS	Round Head Machine Screw
RHWS	Round Head Wood Screw
RWD	Redwood
S.A.D.	See Architectural Drawings
S.C.D.	See Civil Drawings
SCHED	Schedule
S.S.D.	See Structural Drawings
SCL	Structural Composite Lumber
SCN	See Carpentry Notes
SHT	Sheet
SHTG	Sheathing
SMF	Sheet Metal Flashing
SIM	Similar
SP	Space(s)
SPECS	Specifications
SQ	Square
S.S.	Select Structural
STAG	Staggered
STD	Standard
STIF	Stiffener
SST	Stainless Steel
STL	Steel
STRL	Structural
SIP	Structural Insulated Panel
S.S.W.	Structural Sheathed Wall
SYMM	Symmetrical
T&B	Top & Bottom
T&G	Tongue & Groove
THK	Thick or Thickness
THRD	Threaded
T.N.	Toenail
T-U	Tilt-Up (Concrete Panel)
TYP	Typical
U.O.N.	Unless Otherwise Noted
U.R.M.	Unreinforced Masonry
VERT	Vertical
V.I.F.	Verify In Field
W/	With
WD	Wood
WP	Waterproof
W.PT.	Work Point
WT	Weight

GIST RD. SFR 1

APN544-23-041; PROPOSED ADDRESS: 20555 GIST RD, LOS GATOS, CA 95033

REVISION HISTORY

S3DA Structural & Architectural Design
4196 Adams Ave. San Diego CA 92116
(619) 404-0220

Mr. Nader Moavenian
nader.m@s3da-design.com

REGISTERED PROFESSIONAL ENGINEER
Garrett C Crook
C 057196
Exp. 12-31-2021
CIVIL
STATE OF CALIFORNIA
2-11-2020

1. The contractor must check all dimensions on-site before commencing work
2. These drawings are to be read in conjunction with all relevant designer, engineer or specialist drawings and specifications
3. The contractor is responsible for providing all necessary temporary support to the building and any adjacent structures

COUNTY APPROVAL STAMP

REVISION DATE
02/11/2020

DRAWING NAME
093 Structural. Foundation notes

Drawing Scale

S-N.1

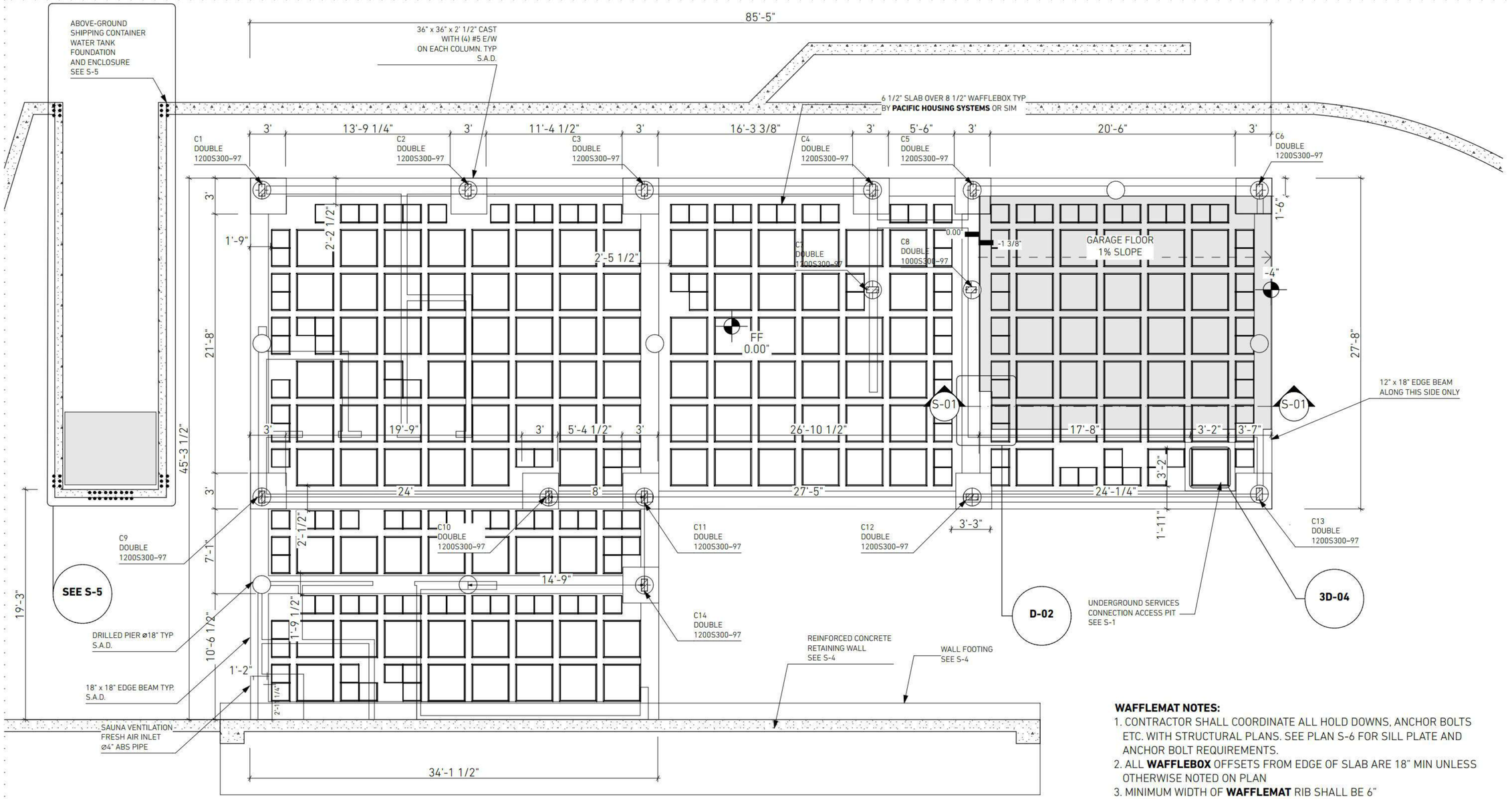

WAFFLEMAT NOTES:

1. CONTRACTOR SHALL COORDINATE ALL HOLD DOWNS, ANCHOR BOLTS ETC. WITH STRUCTURAL PLANS. SEE PLAN S-6 FOR SILL PLATE AND ANCHOR BOLT REQUIREMENTS.
2. ALL **WAFFLEBOX** OFFSETS FROM EDGE OF SLAB ARE 18" MIN UNLESS OTHERWISE NOTED ON PLAN
3. MINIMUM WIDTH OF **WAFFLEMAT** RIB SHALL BE 6"
4. USE DOWNWARD TIE PLACEMENT PER DETAIL FOR ALL LOCATIONS

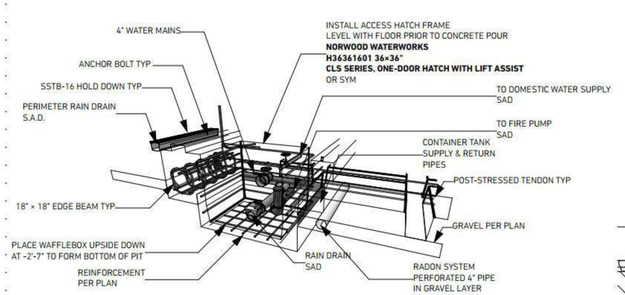

3D-04 UNDERGROUND SERVICES CONNECTION ACCESS PIT 1 1/2"= 1'-0"

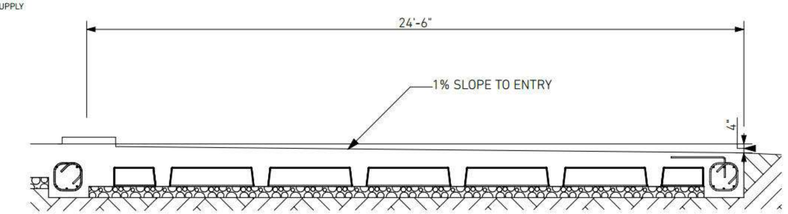

S-01 GARAGE FLOOR SLOPE DETAIL 3/8" = 1'-0"

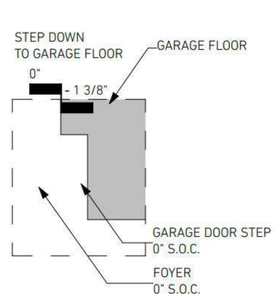

D-02 STEP-DOWN TO GARAGE

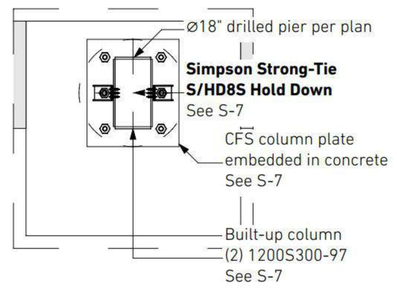

D-03 COLUMN CONNECTION PLATE 1:100

GIST RD. SFR 1

APN544-23-041; PROPOSED ADDRESS: 20555 GIST RD, LOS GATOS, CA 95033

REVISION HISTORY

S3DA Structural & Architectural Design
4196 Adams Ave. San Diego CA 92116
(619) 404-0220

Mr. Nader Moavenian
nader.m@s3da-design.com

REGISTERED PROFESSIONAL ENGINEER BARRETT CROOK C 057196 Exp. 12.31.202 CIVIL STATE OF CALIFORNIA

2-11-2020

1. The contractor must check all dimensions on-site before commencing work

2. These drawings are to be read in conjunction with all relevant designer, engineer or specialist drawings and specifications

3. The contractor is responsible for providing all necessary temporary support to the building and any adjacent structures

COUNTY APPROVAL STAMP

REVISION DATE
02/11/2020

DRAWING NAME
094 Ground floor slab dimensions

Drawing Scale
1/4" = 1'-0", 3/8" = 1'-0"

S-1

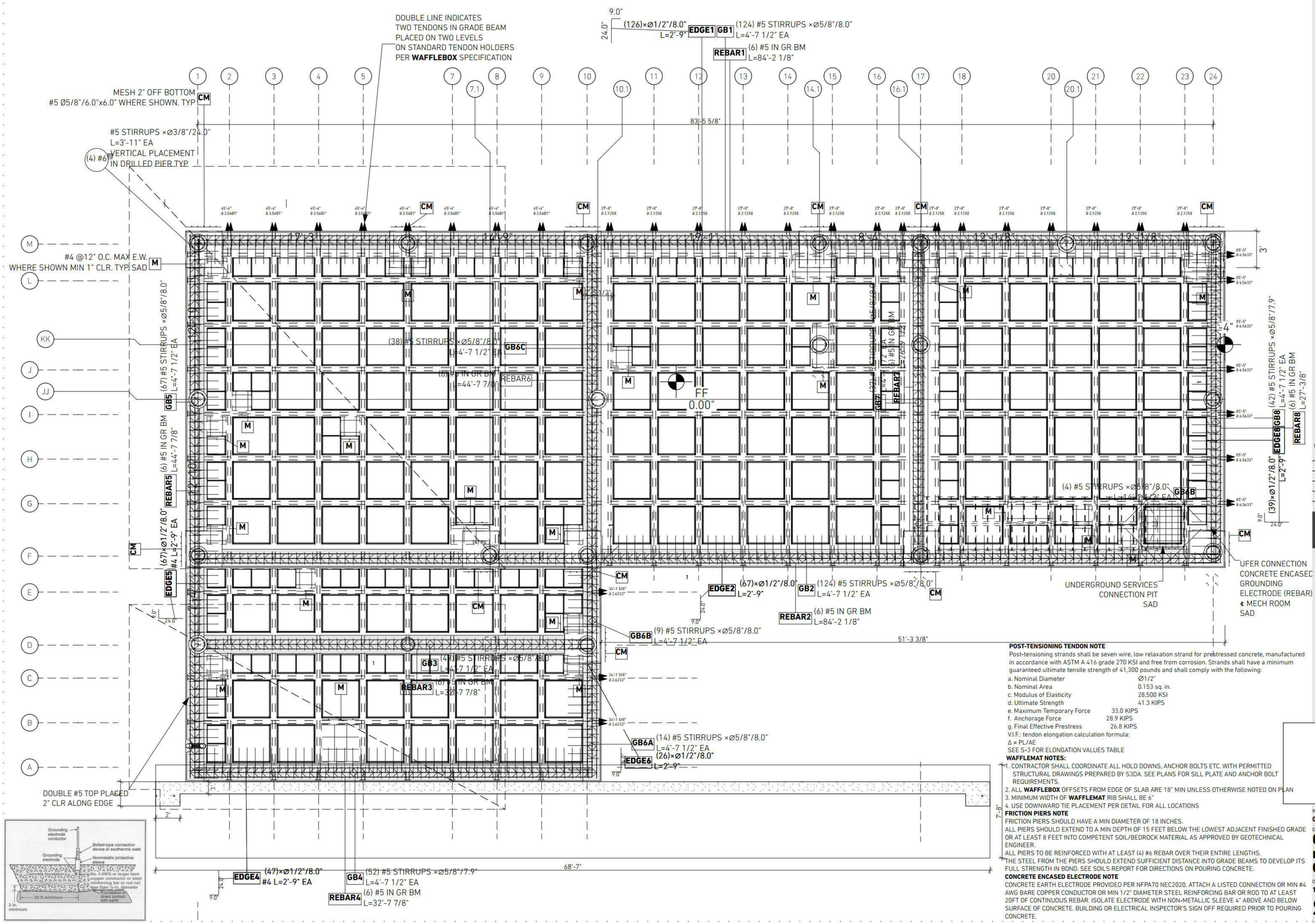

POST-TENSIONING TENDON NOTE

Post-tensioning strands shall be seven wire, low relaxation strand for prestressed concrete, manufactured in accordance with ASTM A 416 grade 270 KSI and free from corrosion. Strands shall have a minimum guaranteed ultimate tensile strength of 41,300 pounds and shall comply with the following:

a. Nominal Diameter	Ø1/2"
b. Nominal Area	0.153 sq. in.
c. Modulus of Elasticity	28,500 KSI
d. Ultimate Strength	41.3 KIPS
e. Maximum Temporary Force	33.0 KIPS
f. Anchorage Force	28.9 KIPS
g. Final Effective Prestress	26.8 KIPS

V.I.F.: tendon elongation calculation formula:
Δ = PL/AE
SEE S-3 FOR ELONGATION VALUES TABLE

WAFFLEMAT NOTES:

1. CONTRACTOR SHALL COORDINATE ALL HOLD DOWNS, ANCHOR BOLTS ETC. WITH PERMITTED STRUCTURAL DRAWINGS PREPARED BY S3DA. SEE PLANS FOR SILL PLATE AND ANCHOR BOLT REQUIREMENTS.
2. ALL **WAFFLEBOX** OFFSETS FROM EDGE OF SLAB ARE 18" MIN UNLESS OTHERWISE NOTED ON PLAN
3. MINIMUM WIDTH OF **WAFFLEMAT** RIB SHALL BE 6"
4. USE DOWNWARD TIE PLACEMENT PER DETAIL FOR ALL LOCATIONS

FRICTION PIERS NOTE

FRICTION PIERS SHOULD HAVE A MIN DIAMETER OF 18 INCHES.
ALL PIERS SHOULD EXTEND TO A MIN DEPTH OF 15 FEET BELOW THE LOWEST ADJACENT FINISHED GRADE OR AT LEAST 8 FEET INTO COMPETENT SOIL/BEDROCK MATERIAL AS APPROVED BY GEOTECHNICAL ENGINEER.
ALL PIERS TO BE REINFORCED WITH AT LEAST (4) #6 REBAR OVER THEIR ENTIRE LENGTHS.
THE STEEL FROM THE PIERS SHOULD EXTEND SUFFICIENT DISTANCE INTO GRADE BEAMS TO DEVELOP ITS FULL STRENGTH IN BOND. SEE SOILS REPORT FOR DIRECTIONS ON POURING CONCRETE.

CONCRETE ENCASED ELECTRODE NOTE

CONCRETE EARTH ELECTRODE PROVIDED PER NFPA70 NEC2020. ATTACH A LISTED CONNECTION OR MIN #4 AWG BARE COPPER CONDUCTOR OR MIN 1/2" DIAMETER STEEL REINFORCING BAR OR ROD TO AT LEAST 20FT OF CONTINUOUS REBAR. ISOLATE ELECTRODE WITH NON-METALLIC SLEEVE 4" ABOVE AND BELOW SURFACE OF CONCRETE. BUILDING OR ELECTRICAL INSPECTOR'S SIGN OFF REQUIRED PRIOR TO POURING CONCRETE.

GIST RD. SFR 1

APN544-23-041; PROPOSED ADDRESS: 20555 GIST RD, LOS GATOS, CA 95033

REVISION HISTORY

S3DA Structural & Architectural Design
4196 Adams Ave. San Diego CA 92116
(619) 404-0220

Mr. Nader Moavenian
nader.m@s3da-design.com

REGISTERED PROFESSIONAL ENGINEER
Garrett C Cook
C 057186
Exp. 12-31-2021
CIVIL
STATE OF CALIFORNIA

2-11-2020

1. The contractor must check all dimensions on-site before commencing work
2. These drawings are to be read in conjunction with all relevant designer, engineer or specialist drawings and specifications
3. The contractor is responsible for providing all necessary temporary support to the building and any adjacent structures

COUNTY APPROVAL STAMP

REVISION DATE
02/11/2020

DRAWING NAME
095 Foundation reinforcement Ground Floor

Drawing Scale
1:40

S-2

POST-TENSIONED TENDON ELONGATION VALUES

Tendon Length (ft)	Elongation (fractional in)	Elongation (decimal in)
10	0-3/4 in.	0.768
11	0-7/8 in.	0.845
12	0-7/8 in.	0.922
13	1 in.	0.999
14	1-1/8 in.	1.076
15	1-1/8 in.	1.153
16	1-1/4 in.	1.229
17	1-1/4 in.	1.306
18	1-3/8 in.	1.383
19	1-1/2 in.	1.46
20	1- 1/2 in.	1.537
21	1-5/8 in.	1.614
22	1-3/4 in.	1.69
23	1-3/4 in.	1.767
24	1-7/8 in.	1.844
25	1-7/8 in.	1.921
26	2 in.	1.998
27	2-1/8 in.	2.075
28	2-1/8 in.	2.151
29	2-1/4 in.	2.228
30	2-1/4 in.	2.305
31	2-3/8 in.	2.382
32	2-1/2 in.	2.459
33	2-1/2 in.	2.536
34	2-5/8 in.	2.612
35	2-3/4 in.	2.689
36	2-3/4 in.	2.766
37	2-7/8 in.	2.843
38	2-7/8 in.	2.92
39	3 in.	2.997
40	3-1/8 in.	3.073
41	3-1/8 in.	3.15
42	3-1/4 in.	3.227
43	3-1/4 in.	3.304
44	3-3/8 in.	3.381
45	3-1/2 in.	3.458
46	3-1/2 in.	3.534
47	3-5/8 in.	3.611
48	3-3/4 in.	3.688
49	3-3/4 in.	3.765
50	3-7/8 in.	3.842
51	3-7/8 in.	3.919
52	4 in.	3.995
53	4-1/8 in.	4.072
54	4-1/8 in.	4.149
55	4-1/4 in.	4.226
56	4-1/4 in.	4.303
57	4-3/8 in.	4.38
58	4-1/2 in.	4.456
59	4-1/2 in.	4.533
60	4-5/8 in.	4.61
61	4-5/8 in.	4.687
62	4-3/4 in.	4.764
63	4-7/8 in.	4.841
64	4-7/8 in.	4.918
65	5 in.	4.994
66	5-1/8 in.	5.071
67	5-1/8 in.	5.148
68	5-1/4 in.	5.225
69	5-1/4 in.	5.302
70	5-3/8 in.	5.379
71	5-1/2 in.	5.455
72	5-1/2 in.	5.532
73	5-5/8 in.	5.609
74	5-5/8 in.	5.686
75	5-3/4 in.	5.763
76	5-7/8 in.	5.84
77	5-7/8 in.	5.916
78	6 in.	5.993
79	6-1/8 in.	6.07
80	6-1/8 in.	6.147
81	6-1/4 in.	6.224
82	6-1/4 in.	6.301
83	6-3/8 in.	6.377
84	6-1/2 in.	6.454
85	6-1/2 in.	6.531
86	6-5/8 in.	6.608
87	6-5/8 in.	6.685
88	6-3/4 in.	6.762
89	6-7/8 in.	6.838
90	6-7/8 in.	6.915
91	7 in.	6.992
92	7-1/8 in.	7.069
93	7-1/8 in.	7.146
94	7-1/4 in.	7.223
95	7-1/4 in.	7.299
96	7-3/8 in.	7.376
97	7-1/2 in.	7.453
98	7-1/2 in.	7.53
99	7-5/8 in.	7.607
100	7-5/8 in.	7.684

LEGEND

M — MESH: #5 REBAR @12" O.C. EW, MIN 1" CLR

CM — COLUMN MESH: #4 REBAR MESH @12" O.C. EW, MIN 1" CLR

POST-TENSIONED TENDONS

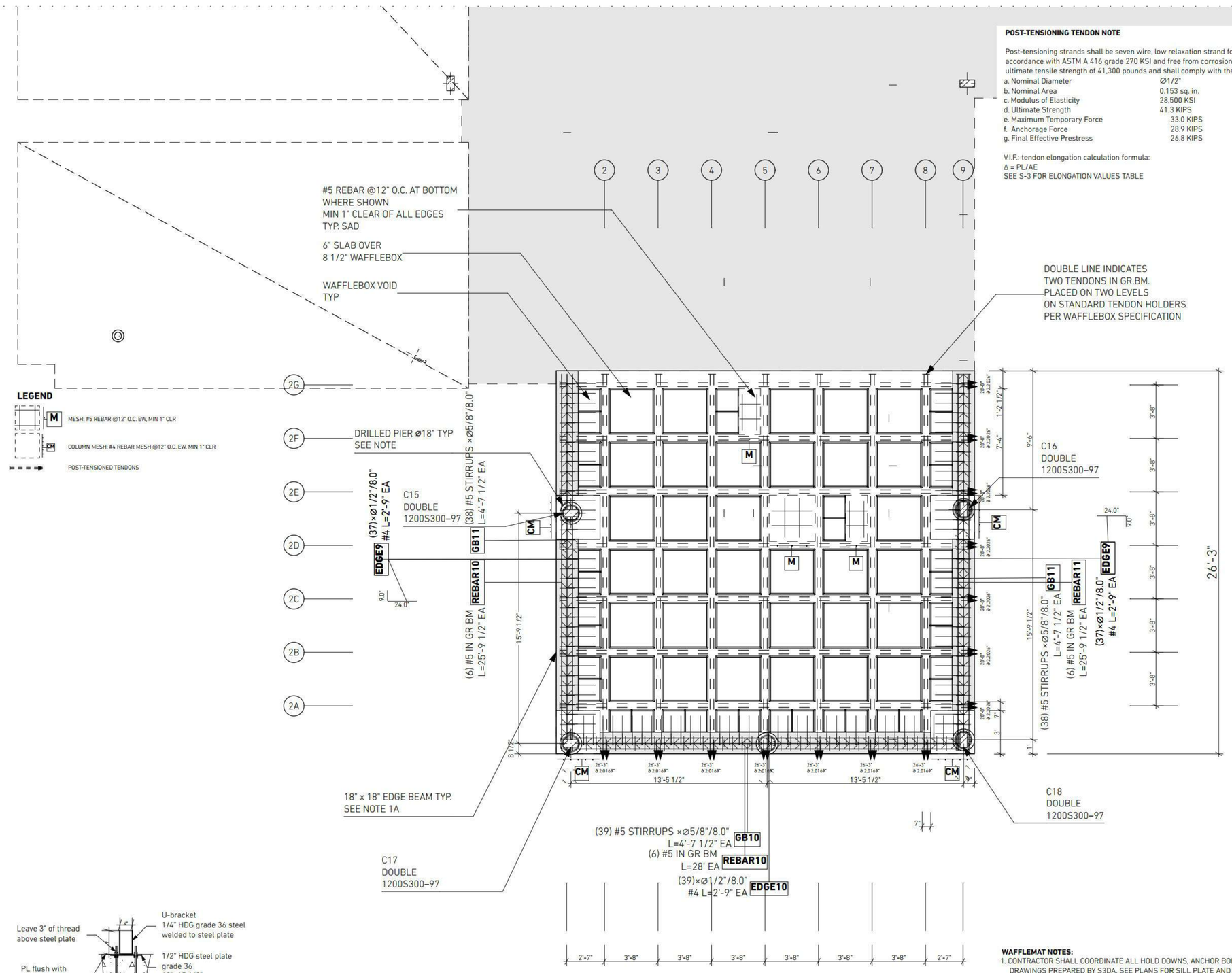

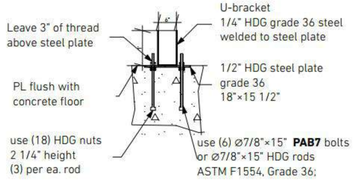

COLUMN CONNECTION 1/2" = 1'-0"

POST-TENSIONING TENDON NOTE

Post-tensioning strands shall be seven wire, low relaxation strand for prestressed concrete, manufactured in accordance with ASTM A 416 grade 270 KSI and free from corrosion. Strands shall have a minimum guaranteed ultimate tensile strength of 41,300 pounds and shall comply with the following:

a. Nominal Diameter	∅1/2"
b. Nominal Area	0.153 sq. in.
c. Modulus of Elasticity	28,500 KSI
d. Ultimate Strength	41.3 KIPS
e. Maximum Temporary Force	33.0 KIPS
f. Anchorage Force	28.9 KIPS
g. Final Effective Prestress	26.8 KIPS

V.I.F.: tendon elongation calculation formula:
Δ = PL/AE
SEE S-3 FOR ELONGATION VALUES TABLE

WAFFLEMAT NOTES:

1. CONTRACTOR SHALL COORDINATE ALL HOLD DOWNS, ANCHOR BOLTS ETC. WITH PERMITTED STRUCTURAL DRAWINGS PREPARED BY S3DA. SEE PLANS FOR SILL PLATE AND ANCHOR BOLT REQUIREMENTS.
2. ALL **WAFFLEBOX** OFFSETS FROM EDGE OF SLAB ARE 18" MIN UNLESS OTHERWISE NOTED ON PLAN
3. MINIMUM WIDTH OF **WAFFLEMAT** RIB SHALL BE 6"
4. USE DOWNWARD TIE PLACEMENT PER DETAIL FOR ALL LOCATIONS

FRICTION PIERS NOTE

FRICTION PIERS SHOULD HAVE A MIN DIAMETER OF 18 INCHES.
ALL PIERS SHOULD EXTEND TO A MIN DEPTH OF 15 FEET BELOW THE LOWEST ADJACENT FINISHED GRADE OR AT LEAST 8 FEET INTO COMPETENT SOIL/BEDROCK MATERIAL AS APPROVED BY GEOTECHNICAL ENGINEER.
ALL PIERS TO BE REINFORCED WITH AT LEAST (4) #6 REBAR OVER THEIR ENTIRE LENGTHS.
THE STEEL FROM THE PIERS SHOULD EXTEND SUFFICIENT DISTANCE INTO GRADE BEAMS TO DEVELOP ITS FULL STRENGTH IN BOND. SEE SOILS REPORT FOR DIRECTIONS ON POURING CONCRETE.

GIST RD. SFR 1

APN544-23-041; PROPOSED ADDRESS: 20555 GIST RD, LOS GATOS, CA 95033

REVISION HISTORY

S3DA Structural & Architectural Design
4196 Adams Ave. San Diego CA 92116
(619) 404-0220

Mr. Nader Moavenian
nader.m@s3da-design.com

REGISTERED PROFESSIONAL ENGINEER — BARRETT CROOK — C 057186 Exp. 12-31-2021 — CIVIL — STATE OF CALIFORNIA

2-11-2020

1. The contractor must check all dimensions on-site before commencing work
2. These drawings are to be read in conjunction with all relevant designer, engineer or specialist drawings and specifications
3. The contractor is responsible for providing all necessary temporary support to the building and any adjacent structures

COUNTY APPROVAL STAMP

REVISION DATE
02/11/2020

DRAWING NAME
096 Foundation reinforcement | Second floor

Drawing Scale
1' = 1'-0"

S-3

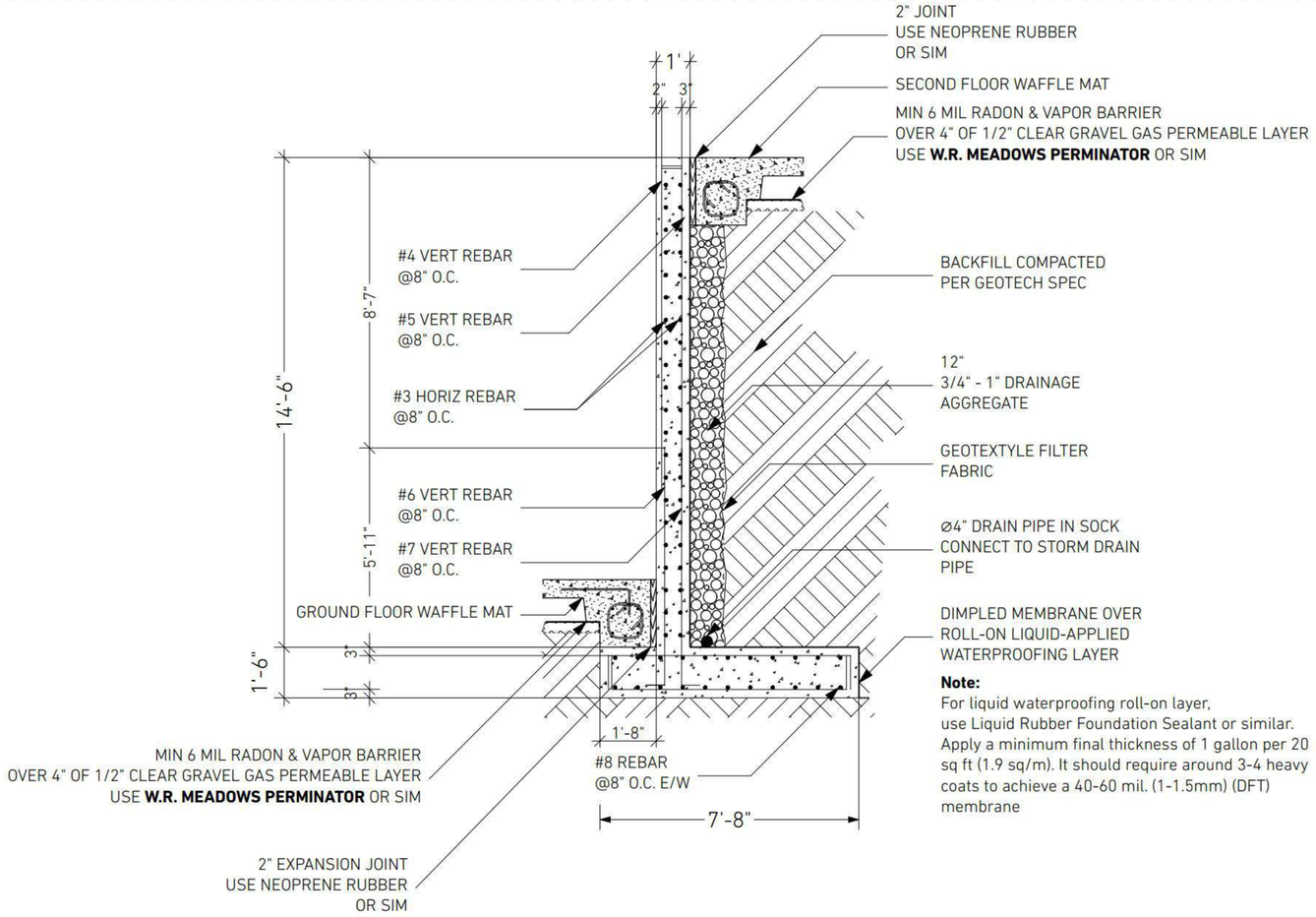

Note:
For liquid waterproofing roll-on layer, use Liquid Rubber Foundation Sealant or similar. Apply a minimum final thickness of 1 gallon per 20 sq ft (1.9 sq/m). It should require around 3-4 heavy coats to achieve a 40-60 mil. (1-1.5mm) (DFT) membrane

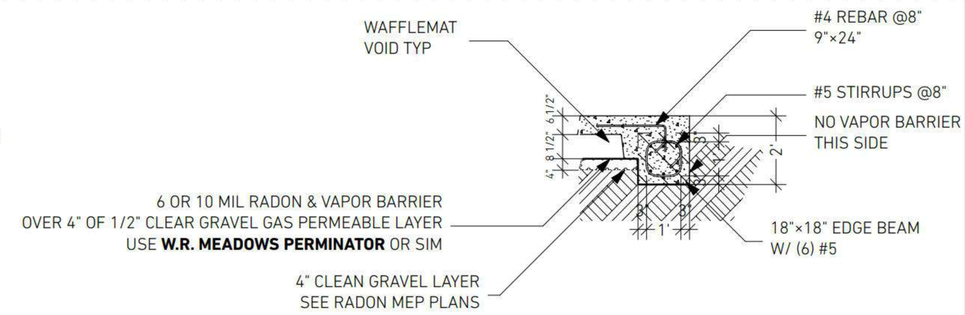

W-40 18" EDGE BEAM DETAIL 1:25

GEOTECH NOTE: ALL STRUCTURAL FILL PLACED AT THE SITE SHOULD BE COMPACTED TO AT LEAST 90% RELATIVE CO MPACTION BY MECHANICAL MEANS ONLY, AS DETERMINED BY ASTM TEST DESIGNATION D1557. THE UPPER 6-INCHES OF SUBGRADE SOIL UNDER SLABS-ON-GRADE SHOULD, HOWEVER, BE COMPACTED TO AT LEAST 95% RELATIVE COMPACTION. THE FILL MATERIALS SHOULD BE PLACED IN LIFTS NOT EXCEEDING 8 INCHES IN UN-COMPACTED THICKNESS.

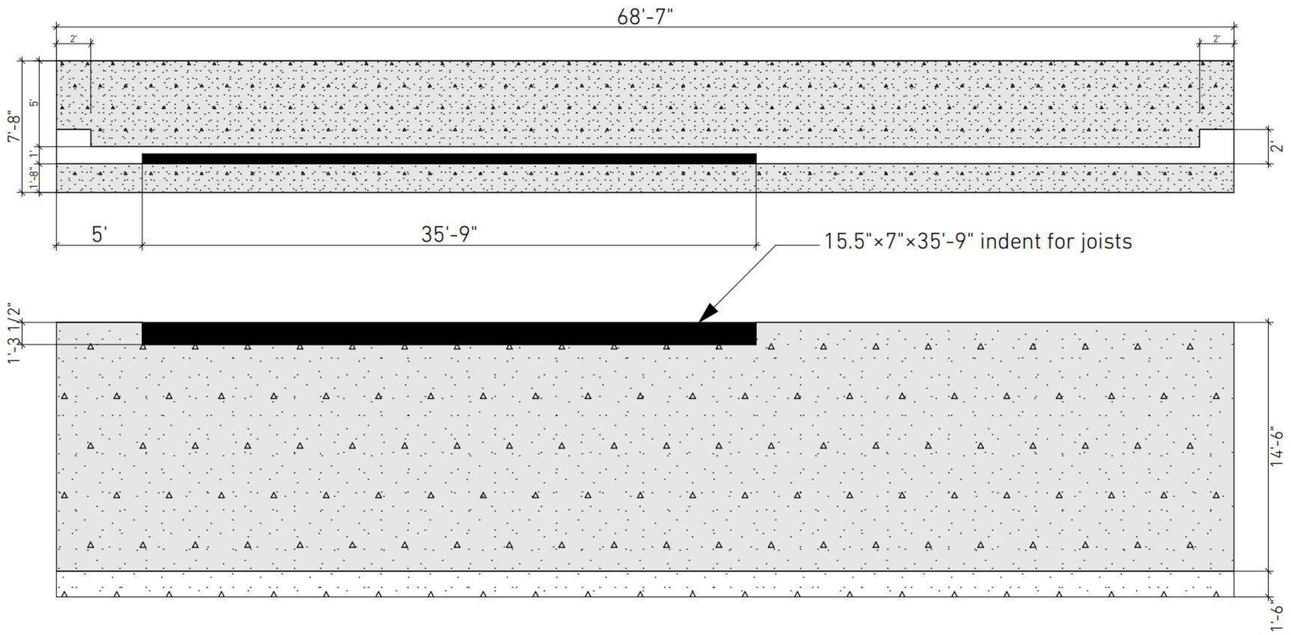

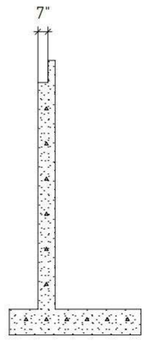

W-42 Structural concrete support wall dimensions 1:50

GIST RD. SFR 1

APN544-23-041; PROPOSED ADDRESS: 20555 GIST RD, LOS GATOS, CA 95033

REVISION HISTORY

S3DA Structural & Architectural Design
4196 Adams Ave. San Diego CA 92116
(619) 404-0220

Mr. Nader Moavenian
nader.m@s3da-design.com

REGISTERED PROFESSIONAL ENGINEER
BARRETT CROOK
C 057196
Ex. 12-31-202
CIVIL
STATE OF CALIFORNIA
2-11-2020

1. The contractor must check all dimensions on-site before commencing work

2. These drawings are to be read in conjunction with all relevant designer, engineer or specialist drawings and specifications

3. The contractor is responsible for providing all necessary temporary support to the building and any adjacent structures

COUNTY APPROVAL STAMP

REVISION DATE
02/11/2020

DRAWING NAME
097 Courtyard support wall

Drawing Scale

S-4

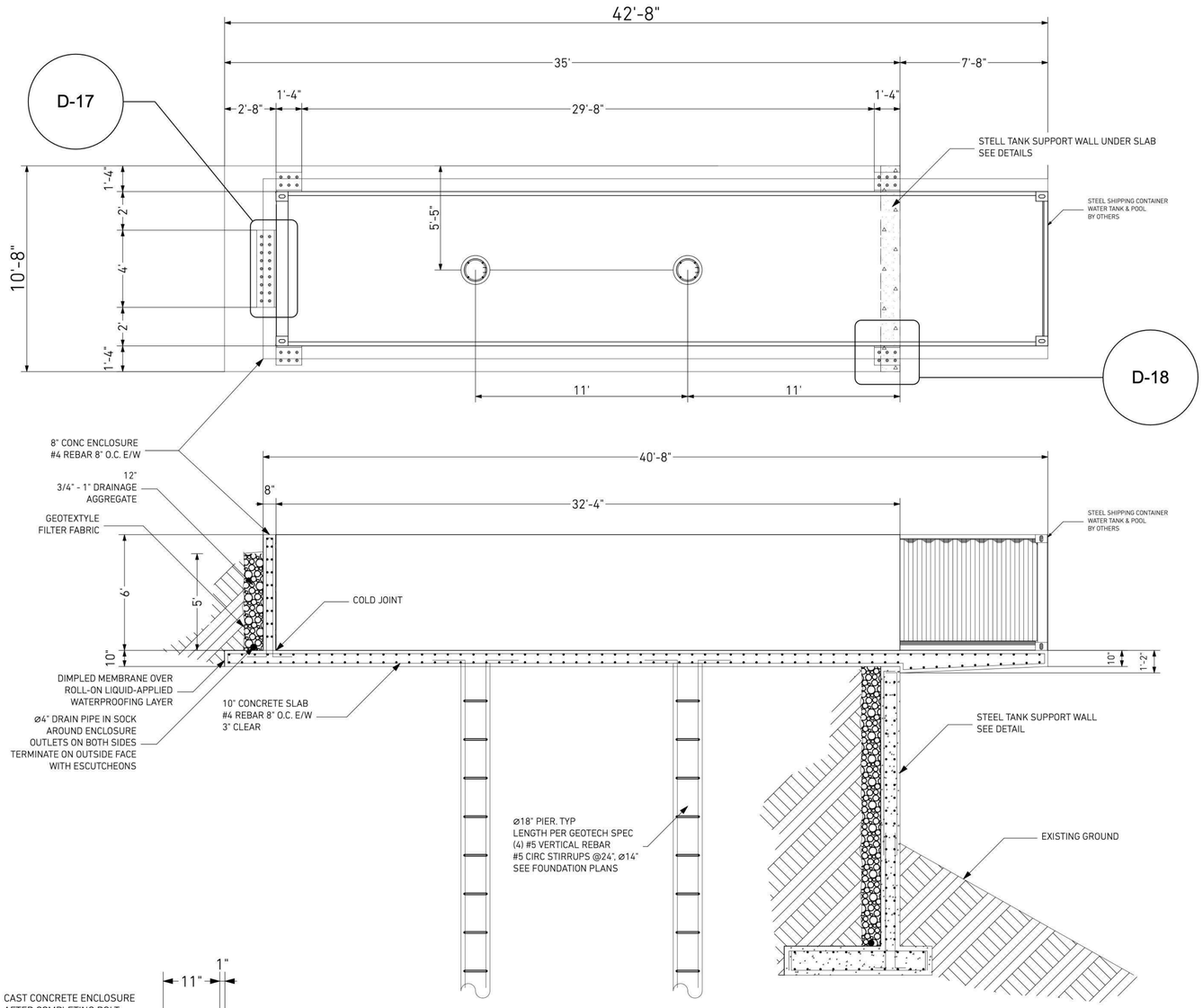

D-17 STEEL CONTAINER CONNECTION: REAR BOLT PLATE DIMENSIONS 1:12.50

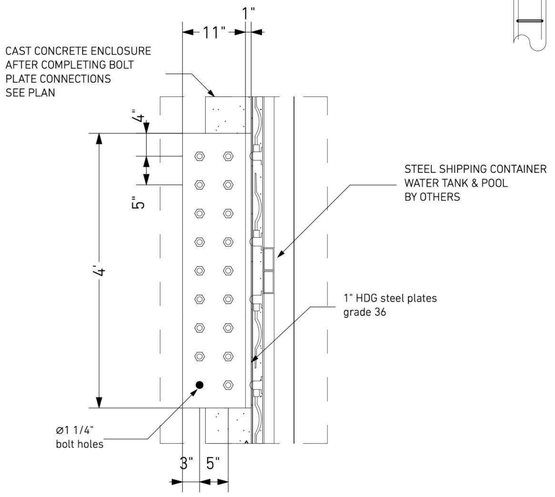

D-18 STEEL CONTAINER CONNECTION: SIDE BOLT PLATE DIMENSIONS 1:12.50

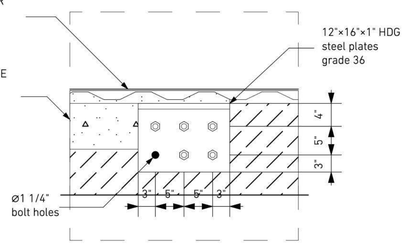

D-19 STEEL CONTAINER CONNECTION: WELDED BOLT PLATE 1:12.50

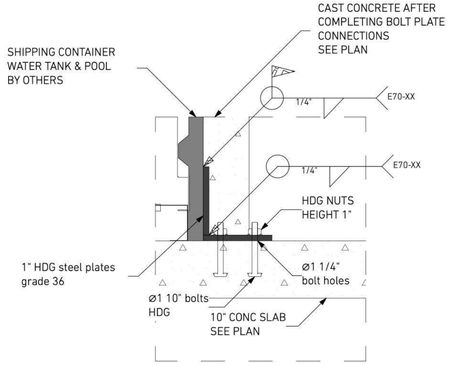

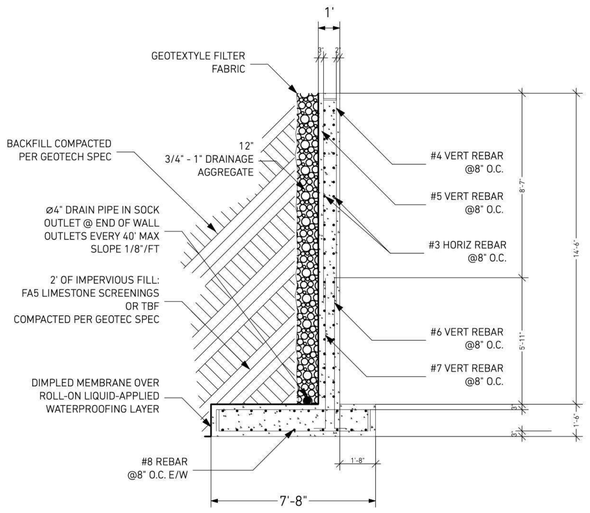

STEEL TANK SUPPORT WALL

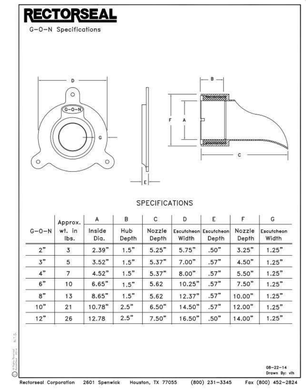

4" DRAIN GLUE-ON NOZZLE & ESCUTCHEON

GIST RD. SFR 1

APN544-23-041; PROPOSED ADDRESS: 20555 GIST RD, LOS GATOS, CA 95033

REVISION HISTORY

S3DA Structural & Architectural Design
4196 Adams Ave. San Diego CA 92116
(619) 404-0220

Mr. Nader Moavenian
nader.m@s3da-design.com

REGISTERED PROFESSIONAL ENGINEER
BARRETT CROOKER
C 057186
Exp. 12-31-2021
CIVIL
STATE OF CALIFORNIA

2-11-2020

1. The contractor must check all dimensions on-site before commencing work

2. These drawings are to be read in conjunction with all relevant designer, engineer or specialist drawings and specifications

3. The contractor is responsible for providing all necessary temporary support to the building and any adjacent structures

COUNTY APPROVAL STAMP

REVISION DATE
02/11/2020

DRAWING NAME
098 Shipping container water tank foundation

Drawing Scale

S-5

NOTES:

1. INSTALL SIMPSON STRONG-TIE **SSTB16-HDG** ANCHOR BOLTS PRIOR TO POURING CONCRETE. USE AnchorMate® **Anchor Bolt Holder**s AND ABS **Anchor Bolt Stabilizer**s ON FORM WORK FOR PRECISE POSITIONING OF ANCHOR BOLTS. REBAR IS REQUIRED AT TOP OF STEM WALL FOUNDATIONS BUT **IS NOT REQUIRED** FOR SLAB-ON-GRADE EDGE AND GARAGE CURB, OR STEM WALL GARAGE FRONT INSTALLATIONS
2. FOR CFS TRACK SILL PLATES, EMBED **SSTB16-HDG** TO TOP EMBEDMENT MARK AT BEGINNING OF THREAD. SEE DETAIL
3. INSTALL SIMPSON STRONG-TIE TITEN HD® HEAVY-DUTY SCREW ANCHORS **THD62500H, THD62800H & THD75812H** MIN 72 HOURS AFTER POURING CONCRETE
4. APPLY STRESS TO ANY ANCHOR MIN 7 DAYS AFTER POURING CONCRETE
5. USE ONLY HOT DIP GALVANIZED OR STAINLESS STEEL CONNECTOR HARDWARE: BOLTS, SCREWS, NUTS, WASHERS, ETC
6. USE SIMPSON STRONG-TIE **BP⅝-3** BEARING PLATES ON EACH SSTB16-HDG BOLT, UNLESS OTHERWISE SPECIFIED
7. DO NOT INSTALL SCREW ANCHORS IN RIDGE BEAMS OF THE WAFFLEMAT FOUNDATION ABOVE POST TENSIONING TENDONS TO AVOID DAMAGING EMBEDDED PT TENDONS.
8. WHERE WOODEN SILL IS SPECIFIED, USE ROT-RESISTANT SPECIES LUMBER, E.G. REDWOOD OR WESTERN RED CEDAR
9. ANCHOR LAYOUT BASED ON STANDARD 10-FT LENGTH CFS TRACK AND 10-FT LENGTH 2× LUMBER

Titen HD® Anchor Product Data — Zinc Plated

Size (in.)	Model No.	Drill Bit Diameter (in.)	Wrench Size (in.)
¼ x 1¾	THDB25178H	¼	⅜
¼ x 2¾	THDB25234H	¼	⅜
¼ x 3	THDB25300H	¼	⅜
¼ x 3½	THDB25312H	¼	⅜
¼ x 4	THDB25400H	¼	⅜
⅜ x 1¾	THD37134H^	⅜	⅝
⅜ x 2½	THD37212H^	⅜	⅝
⅜ x 3	THD37300H	⅜	⅝
⅜ x 4	THD37400H	⅜	⅝
⅜ x 5	THD37500H	⅜	⅝
⅜ x 6	THD37600H	⅜	⅝
½ x 3	THD50300H	½	¾
½ x 4	THD50400H	½	¾
½ x 5	THD50500H	½	¾
½ x 6	THD50600H	½	¾
½ x 6½	THD50612H	½	¾
½ x 8	THD50800H	½	¾
½ x 12	THD501200H	½	¾
½ x 13	THD501300H	½	¾
½ x 14	THD501400H	½	¾
½ x 15	THD501500H	½	¾
⅝ x 4	THDB62400H	⅝	⅞
⅝ x 5	THDB62500H	⅝	⅞
⅝ x 6	THDB62600H	⅝	⅞
⅝ x 6½	THDB62612H	⅝	⅞
⅝ x 8	THDB62800H	⅝	⅞
¾ x 4	THD75400H	¾	1⅛
¾ x 5	THD75500H	¾	1⅛
¾ x 6	THD75600H	¾	1⅛
¾ x 7	THD75700H	¾	1⅛
¾ x 8½	THD75812H	¾	1⅛
¾ x 10	THD75100H	¾	1⅛

SIMPSON Strong-Tie

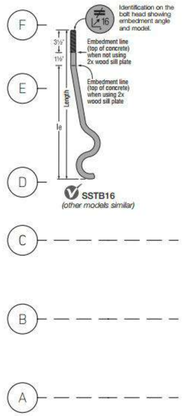

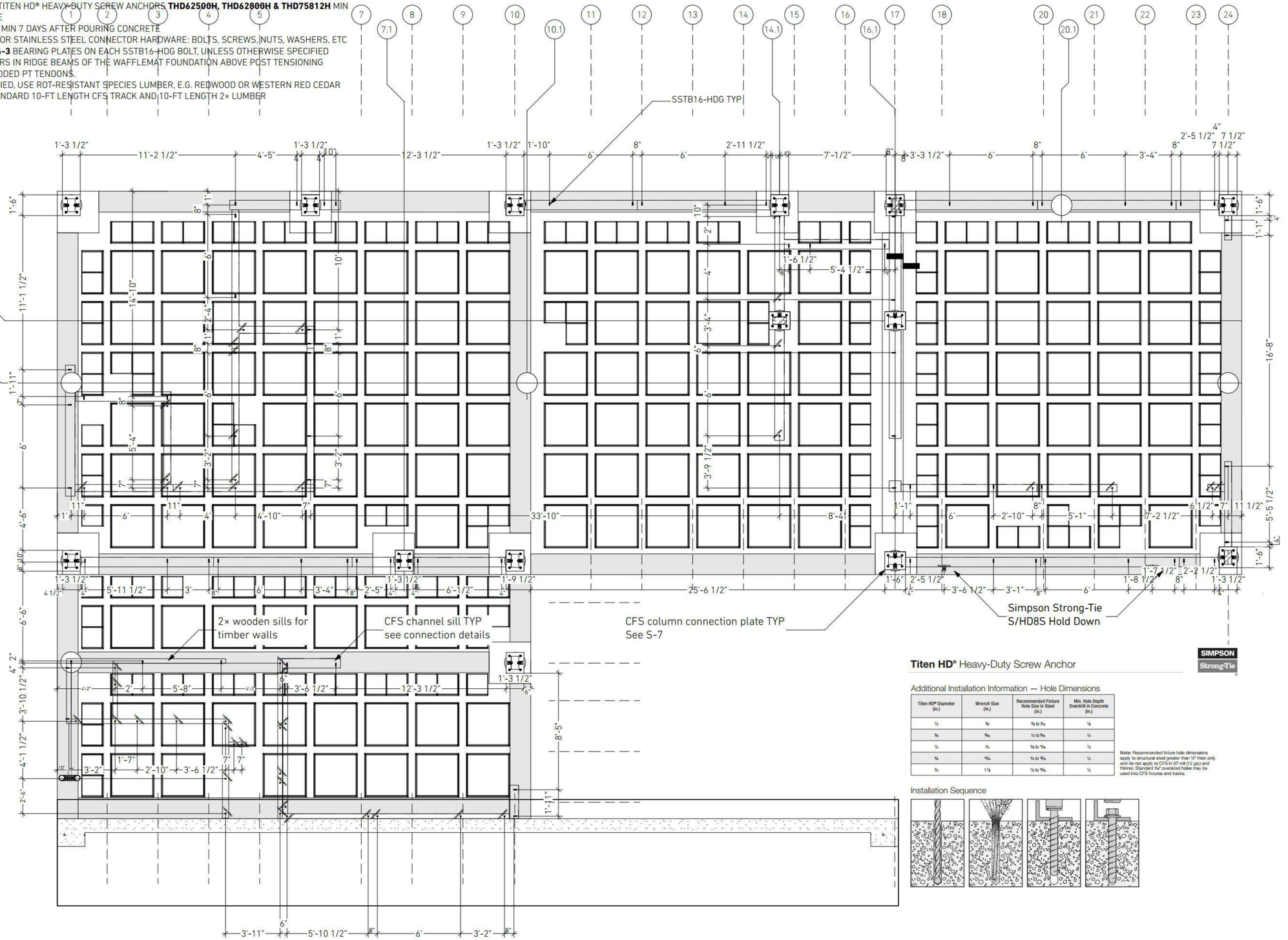

Titen HD® Heavy-Duty Screw Anchor

Additional Installation Information — Hole Dimensions

Titen HD® Diameter (in.)	Wrench Size (in.)	Recommended Fixture Hole Size in Steel (in.)	Min. Hole Depth Overdrill in Concrete (in.)
¼	⅜	⅜ to 7/16	⅛
⅜	9/16	½ to 9/16	¼
½	¾	⅝ to 11/16	½
⅝	15/16	¾ to 15/16	½
¾	1⅛	⅞ to 15/16	½

Note: Recommended fixture hole dimensions apply to structural steel greater than ¼" thick only and do not apply to CFS in 97 mil (12 ga.) and thinner. Standard ¾" oversized holes may be used into CFS fixtures and tracks.

Installation Sequence

SIMPSON Strong-Tie

GIST RD. SFR 1

APN544-23-041; PROPOSED ADDRESS: 20555 GIST RD, LOS GATOS, CA 95033

REVISION HISTORY

S3DA Structural & Architectural Design
4196 Adams Ave. San Diego CA 92116
(619) 404-2220

Mr. Nader Moavenian
nader.m@s3da-design.com

REGISTERED PROFESSIONAL ENGINEER BARRETT CROCKETT C 057196 Exp. 12/31/2021 CIVIL STATE OF CALIFORNIA
2-11-2020

1. The contractor must check all dimensions on-site before commencing work
2. These drawings are to be read in conjunction with all relevant designer, engineer or specialist drawings and specifications
3. The contractor is responsible for providing all necessary temporary support to the building and any adjacent structures

COUNTY APPROVAL STAMP

REVISION DATE
02/11/2020

DRAWING NAME
099 Anchor bolts, hold downs on ground floor ~~slab~~

S-6

NOTES:

1. INSTALL SIMPSON STRONG-TIE **SSTB16-HDG** ANCHOR BOLTS PRIOR TO POURING CONCRETE. USE AnchorMate® **Anchor Bolt Holder**s AND ABS **Anchor Bolt Stabilizer**s ON FORM WORK FOR PRECISE POSITIONING OF ANCHOR BOLTS. REBAR IS REQUIRED AT TOP OF STEM WALL FOUNDATIONS BUT **IS NOT REQUIRED** FOR SLAB-ON-GRADE EDGE AND GARAGE CURB, OR STEM WALL GARAGE FRONT INSTALLATIONS
2. FOR CFS TRACK SILL PLATES, EMBED **SSTB16-HDG** TO TOP EMBEDMENT MARK AT BEGINNING OF THREAD. SEE DETAIL
3. INSTALL SIMPSON STRONG-TIE TITEN HD® HEAVY-DUTY SCREW ANCHORS **THD62500H, THD62800H & THD75812H** MIN 72 HOURS AFTER POURING CONCRETE
4. APPLY STRESS TO ANY ANCHOR MIN 7 DAYS AFTER POURING CONCRETE
5. USE ONLY HOT DIP GALVANIZED OR STAINLESS STEEL CONNECTOR HARDWARE: BOLTS, SCREWS, NUTS, WASHERS, ETC
6. USE SIMPSON STRONG-TIE **BP⅝-3** BEARING PLATES ON EACH SSTB16-HDG BOLT, UNLESS OTHERWISE SPECIFIED
7. DO NOT INSTALL SCREW ANCHORS IN RIDGE BEAMS OF THE WAFFLEMAT FOUNDATION ABOVE POST TENSIONING TENDONS TO AVOID DAMAGING EMBEDDED PT TENDONS.
8. WHERE WOODEN SILL IS SPECIFIED, USE ROT-RESISTANT SPECIES LUMBER, E.G. REDWOOD OR WESTERN RED CEDAR
9. ANCHOR LAYOUT BASED ON STANDARD 10-FT LENGTH CFS TRACK AND 10-FT LENGTH 2× LUMBER

Titen HD® Anchor Product Data — Zinc Plated

Size (in.)	Model No.	Drill Bit Diameter (in.)	Wrench Size (in.)
¼ x 1¾	THDB25178H	¼	⅜
¼ x 2¾	THDB25234H	¼	⅜
¼ x 3	THDB25300H	¼	⅜
¼ x 3½	THDB25312H	¼	⅜
¼ x 4	THDB25400H	¼	⅜
⅜ x 1¾	THD37134H^	⅜	9⁄16
⅜ x 2½	THD37212H^	⅜	9⁄16
⅜ x 3	THD37300H	⅜	9⁄16
⅜ x 4	THD37400H	⅜	9⁄16
⅜ x 5	THD37500H	⅜	9⁄16
⅜ x 6	THD37600H	⅜	9⁄16
½ x 3	THD50300H	½	¾
½ x 4	THD50400H	½	¾
½ x 5	THD50500H	½	¾
½ x 6	THD50600H	½	¾
½ x 6½	THD50612H	½	¾
½ x 8	THD50800H	½	¾
½ x 12	THD501200H	½	¾
½ x 13	THD501300H	½	¾
½ x 14	THD501400H	½	¾
½ x 15	THD501500H	½	¾
⅝ x 4	THDB62400H	⅝	15⁄16
⅝ x 5	THDB62500H	⅝	15⁄16
⅝ x 6	THDB62600H	⅝	15⁄16
⅝ x 6½	THDB62612H	⅝	15⁄16
⅝ x 8	THDB62800H	⅝	15⁄16
¾ x 4	THD75400H	¾	1⅛
¾ x 5	THD75500H	¾	1⅛
¾ x 6	THDT75600H	¾	1⅛
¾ x 7	THD75700H	¾	1⅛
¾ x 8½	THD75812H	¾	1⅛
¾ x 10	THD75100H	¾	1⅛

SIMPSON Strong-Tie

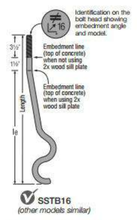

Titen HD® Heavy-Duty Screw Anchor

SIMPSON Strong-Tie

Additional Installation Information — Hole Dimensions

Titen HD® Diameter (in.)	Wrench Size (in.)	Recommended Fixture Hole Size in Steel (in.)	Min. Hole Depth Overdrill in Concrete (in.)
¼	⅜	⅜ to 7⁄16	⅛
⅜	9⁄16	½ to 9⁄16	¼
½	¾	⅝ to 11⁄16	½
⅝	15⁄16	¾ to 15⁄16	½
¾	1⅛	⅞ to 15⁄16	½

Note: Recommended fixture hole dimensions apply to structural steel greater than ¼" thick only and do not apply to CFS in 97 mil (12 ga.) and thinner. Standard ¾6" oversized holes may be used into CFS fixtures and tracks.

Installation Sequence

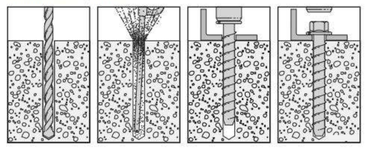

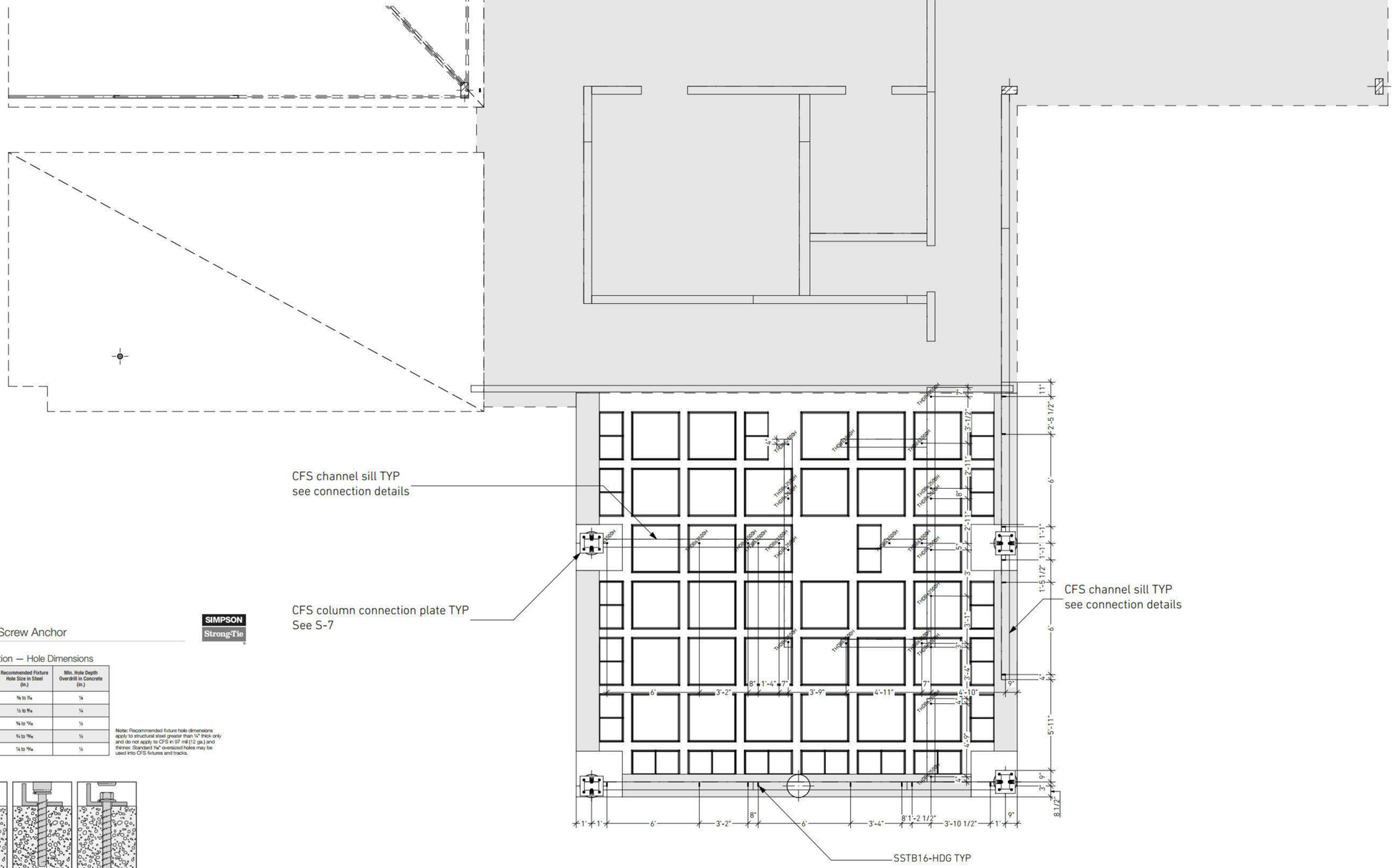

GIST RD. SFR 1

APN544-23-041; PROPOSED ADDRESS: 20555 GIST RD, LOS GATOS, CA 95033

REVISION HISTORY

S3DA Structural & Architectural Design
4196 Adams Ave. San Diego CA 92116
(619) 404-0220

Mr. Nader Moavenian
nader.m@s3da-design.com

REGISTERED PROFESSIONAL ENGINEER
BARRETT CROOM
C 057198
Exp. 12.31.2021
CIVIL
STATE OF CALIFORNIA
2-11-2020

1. The contractor must check all dimensions on-site before commencing work
2. These drawings are to be read in conjunction with all relevant designer, engineer or specialist drawings and specifications
3. The contractor is responsible for providing all necessary temporary support to the building and any adjacent structures

COUNTY APPROVAL STAMP

REVISION DATE
02/11/2020

DRAWING NAME
100 Anchor bolts, hold downs on second floor

Drawing Scale

S-6.1

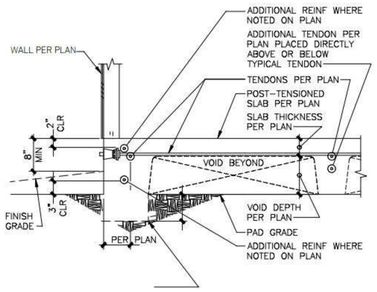

1 TYPICAL PERIMETER

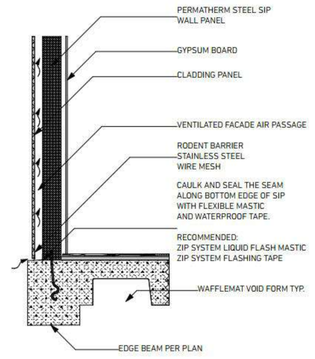

2 WALL SECTION DETAILS

ANCHORS SHALL BE ONE OF THE FOLLOWING TYPES	
MFR & MODEL	"Y"
"HILTI" KWIK-BOLT-TZ	$3\frac{1}{8}$"
"HILTI" KH-EZ	$3\frac{1}{8}$"
"SIMPSON" STRONG-BOLT	$3\frac{3}{8}$"
"SIMPSON" TITEN-HD	$3\frac{1}{2}$"

AT STRUCTURAL SHEATHED WALLS:
TRACK SILL WITH 5/8"ø A.B (WITH 7" MIN EMBEDMENT), $\frac{3}{8}$"ø EPOXY-SET THREADED ROD PER DETAIL 22/SD2, OR $\frac{3}{8}$"ø ANCHORS PER SCHEDULE @ 6'-0"O.C. FOR ONE STORY AND 4'-0"O.C. FOR TWO STORY TYP U.O.N. – PROVIDE STANDARD CUT WASHER OVER BPS$\frac{3}{8}$-3 AT EACH BOLT – FOR ADDITIONAL REQUIREMENTS SEE DETAIL 5/SD2
AT NON-SHEATHED WALLS:
TRACK SILL WITH 0.145"ø×3" MIN POWDER DRIVEN FASTENERS WITH $\frac{3}{4}$"ø x 16 GA OR EQUIVALENT SQ STL WASHER – PLACE PINS AT 6" FROM EACH END OF SILL & @ 32"O.C. MAX TYP U.O.N.

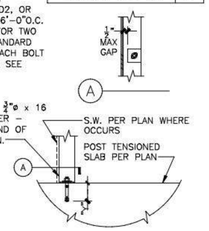

3 TYPICAL INTERIOR WALL

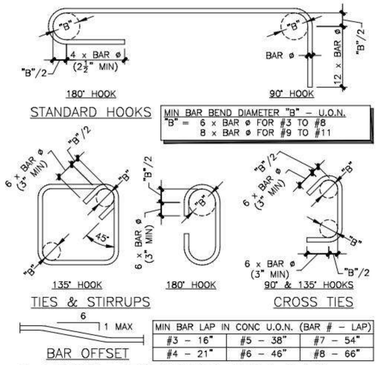

MIN BAR LAP IN CONC U.O.N. (BAR # – LAP)		
#3 – 16"	#5 – 38"	#7 – 54"
#4 – 21"	#6 – 46"	#8 – 66"

4 TYPICAL REINFORCING STEEL DATA

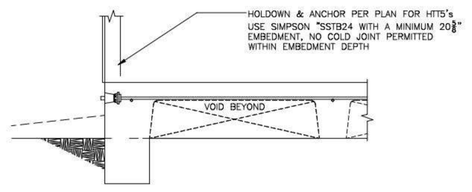

5 TYPICAL PERIMETER AT HOLDOWN

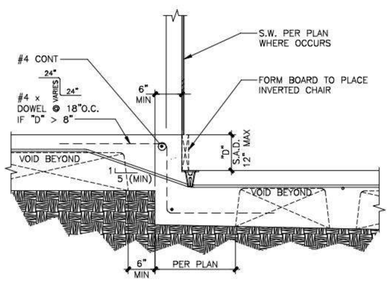

6 STEP IN SLAB: MAIN FLOOR TO GARAGE

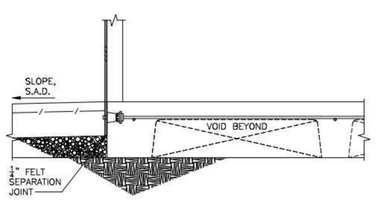

7 GARAGE DRIVEWAY TO GARAGE SLAB

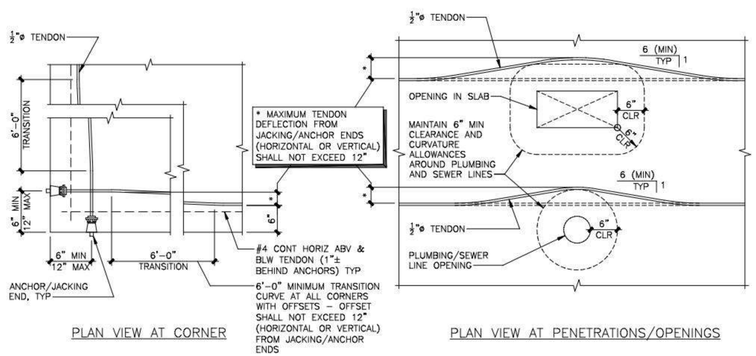

8 TYPICAL TENDON LAYOUT AT CORNERS AND PENETRATIONS

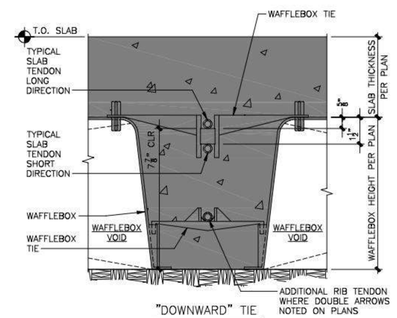

9 TENDON PLACEMENT

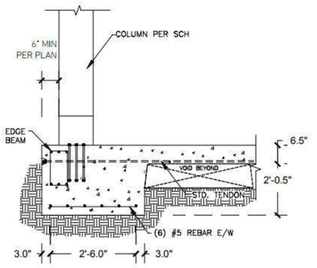

10 CONNECTION COLUMN TO PAD

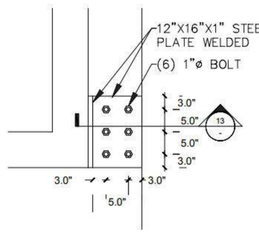

11 POOL CONNECTION DETAIL - 1

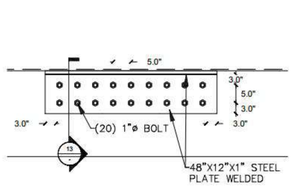

12 POOL CONNECTION DETAIL - 2

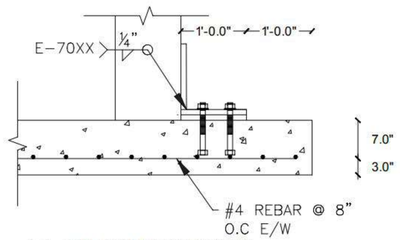

13 POOL CONNECTION SECTION

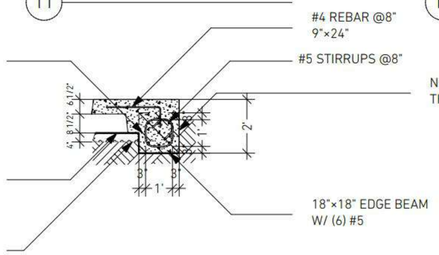

14 EDGE BEAM DETAIL 3/8" = 1'-0"

GIST RD. SFR 1

APN544-23-041; PROPOSED ADDRESS: 20555 GIST RD, LOS GATOS, CA 95033

REVISION HISTORY

S3DA Structural & Architectural Design
4196 Adams Ave. San Diego CA 92116
(619) 404-0220

Mr. Nader Moavenian
nader.m@s3da-design.com

REGISTERED PROFESSIONAL ENGINEER BARRETT CROOK C 057196 Ex. 12.31.202 CIVIL STATE OF CALIFORNIA
2-11-2020

1. The contractor must check all dimensions on-site before commencing work

2. These drawings are to be read in conjunction with all relevant designer, engineer or specialist drawings and specifications

3. The contractor is responsible for providing all necessary temporary support to the building and any adjacent structures

COUNTY APPROVAL STAMP

REVISION DATE
02/11/2020

DRAWING NAME
101 Foundation details

Drawing Scale

S-6.2

EMBEDDED COLUMN POST FOR CFS BUILT-UP COLUMNS

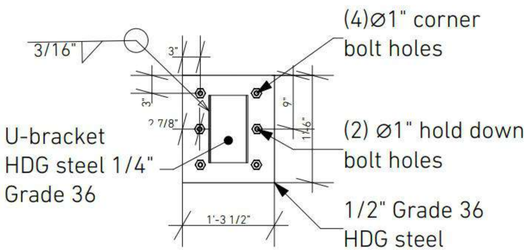

NOTE:
Treat all welds with ZRC® Cold Galvanizing Compound or similar

Column connection plate dimensions 1" = 1'-0"

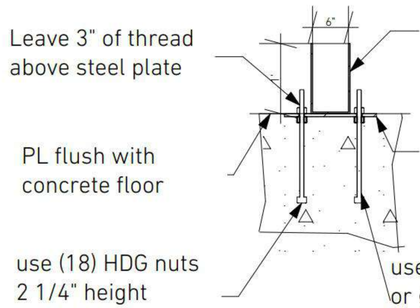

Section view 1" = 1'-0"

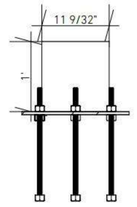

NOTE:
FOR 10" COLUMNS
U-BRACKET WIDTH
WIDTH IS 9 9/32"

Side view

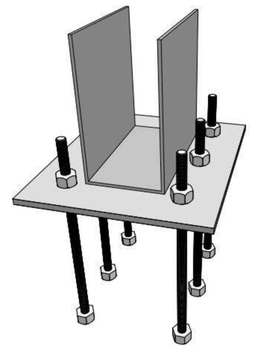

ASSEMBLED CONNECTION PLATE

NOTE:
1. Cover exposed thread areas with tape prior to concrete pour
2. Treat all welds with **ZRC® Cold Galvanizing Compound** or similar
3. Use hot dip galvanized connection hardware: bolts, rods, nuts
4. Do not combine rods & nuts of different galvanization types, i.e. electroplated galvanized and hot-dip galvanized
5. Remove nuts from middle rods for installation of hold downs
6. Tighten corner nuts after concrete pour
7. Level steel plate in all directions prior to concrete pour
8. Steel plate top to be flush with finished floor SOC
9. Washers or bearing plates are **not required**

BUILT-UP CFS COLUMN DETAILS

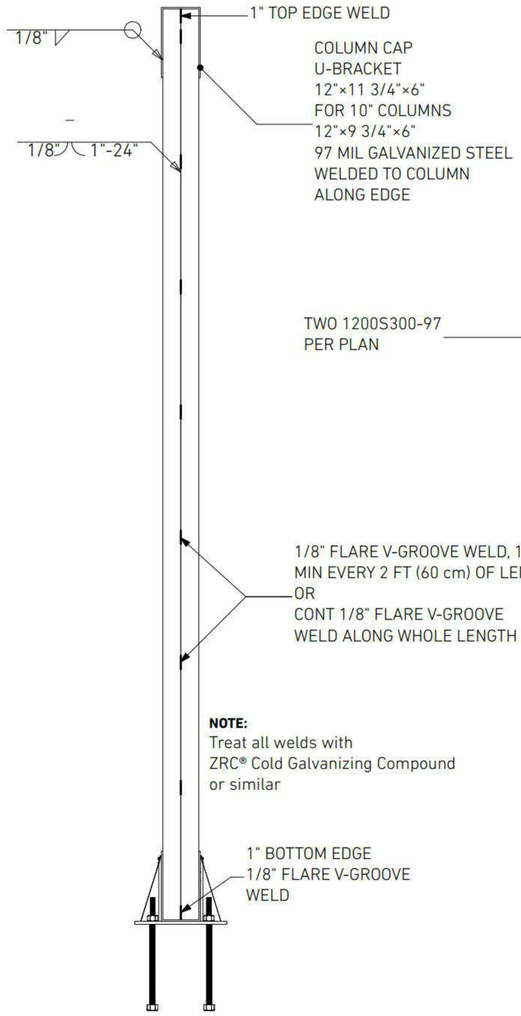

NOTE:
Treat all welds with ZRC® Cold Galvanizing Compound or similar

WELDED CFS BUILT-UP COLUMN

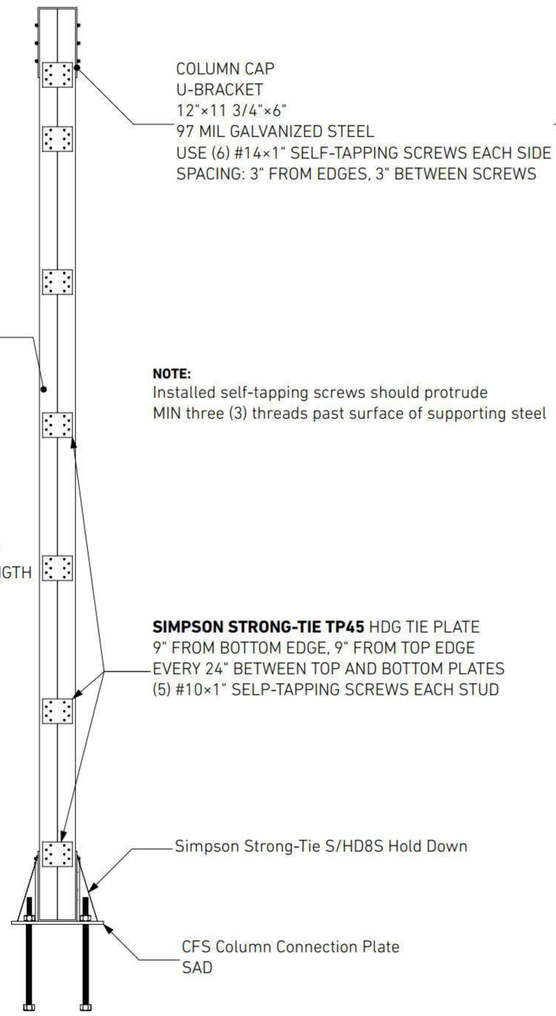

SCREW-CONNECTED CFS BUILT-UP COLUMN

NOTE:
Installed self-tapping screws should protrude MIN three (3) threads past surface of supporting steel

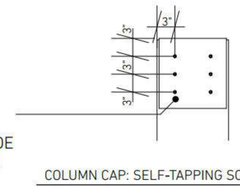

COLUMN CAP: SELF-TAPPING SCREWS

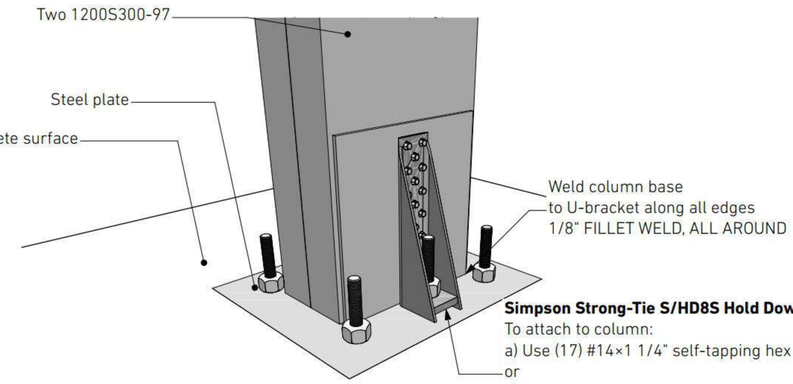

Built-up CFS Column Installed on Leveling Plate

COLUMN SCHEDULE

COLUMN NUMBER	LENGTH	WIDTH	CFS MEMBERS
C1	11'-10"	12"	1200S300-97×2
C2	13'	12"	1200S300-97×2
C3	13'	12"	1200S300-97×2
C4	13'	12"	1200S300-97×2
C5	24'-2"	12"	1200S300-97×2
C6	24'-2"	12"	1200S300-97×2
C7	25'-8"	12"	1200S300-97×2
C8	25'-8"	10"	1000S300-97×2
C9	11'-10"	12"	1200S300-97×2
C10	16'-1 1/4"	12"	1200S300-97×2
C11	11'-10"	12"	1200S300-97×2
C11-TOP	11-8 3/4"	12"	1200S300-97×2
C12	28'-8 3/4"	12"	1200S300-97×2
C13	28'-8 3/4"	12"	1200S300-97×2
C14	11'-10"	12"	1200S300-97×2
C15	12'-8"	12"	1200S300-97×2
C16	15'-9 5/16"	12"	1200S300-97×2
C17	12'-8"	12"	1200S300-97×2
C18	15'-9 5/16"	12"	1200S300-97×2
C19	12'-8"	12"	1200S300-97×2
C20	11-8 3/4"	10"	1000S300-97×2

NOTES:

- COLUMNS C8 AND C20 ARE 6"×10"
- ALL OTHER COLUMNS ARE 6"×12"
- ROOF ENDS OF COLUMNS C11-TOP AND C20 SHOULD BE SLOPED 4.764° ALONG THE 6" SIDE, I.E. ½" DROP FROM THE INWARDS FACING SIDE TO THE OUTWARDS FACING SIDE, TO ACCOMMODATE ROOF RAFTERS. THE RAFTERS SHOULD SIT PLUM WITH THE COLUMN'S TOP PLATE.

GIST RD. SFR 1

APN544-23-041; PROPOSED ADDRESS: 20555 GIST RD, LOS GATOS, CA 95033

REVISION HISTORY

S3DA Structural & Architectural Design
4196 Adams Ave. San Diego CA 92116
(619) 404-0220

Mr. Nader Moavenian
nader.m@s3da-design.com

REGISTERED PROFESSIONAL ENGINEER
BARRETT CROOK
C 057186
Exp. 12-31-2021
CIVIL
STATE OF CALIFORNIA

2-11-2020

1. The contractor must check all dimensions on-site before commencing work
2. These drawings are to be read in conjunction with all relevant designer, engineer or specialist drawings and specifications
3. The contractor is responsible for providing all necessary temporary support to the building and any adjacent structures

COUNTY APPROVAL STAMP

REVISION DATE
02/11/2020

DRAWING NAME
102 Built-up CFS columns

Drawing Scale
1/128"= 1'-0"

S-7

COLUMN SCHEDULE

COLUMN NUMBER	LENGTH	WIDTH	CFS MEMBERS
C1	11'-10"	12"	1200S300-97×2
C2	13'	12"	1200S300-97×2
C3	13'	12"	1200S300-97×2
C4	13'	12"	1200S300-97×2
C5	24'-2"	12"	1200S300-97×2
C6	24'-2"	12"	1200S300-97×2
C7	25'-8"	12"	1200S300-97×2
C8	25'-8"	10"	1000S300-97×2
C9	11'-10"	12"	1200S300-97×2
C10	16'-1 1/4"	12"	1200S300-97×2
C11	11'-10"	12"	1200S300-97×2
C11-TOP	11-8 3/4"	12"	1200S300-97×2
C12	28'-8 3/4"	12"	1200S300-97×2
C13	28'-8 3/4"	12"	1200S300-97×2
C14	11'-10"	12"	1200S300-97×2
C15	12'-8"	12"	1200S300-97×2
C16	15'-9 5/16"	12"	1200S300-97×2
C17	12'-8"	12"	1200S300-97×2
C18	15'-9 5/16"	12"	1200S300-97×2
C19	12'-8"	12"	1200S300-97×2
C20	11-8 3/4"	10"	1000S300-97×2

NOTES:

- COLUMNS C8 AND C20 ARE 6"×10"
- ALL OTHER COLUMNS ARE 6"×12"
- ROOF ENDS OF COLUMNS C11-TOP AND C20 SHOULD BE SLOPED 4.764° ALONG THE 6" SIDE, I.E. ½" DROP FROM THE INWARDS FACING SIDE TO THE OUTWARDS FACING SIDE, TO ACCOMMODATE ROOF RAFTERS. THE RAFTERS SHOULD SIT PLUM WITH THE COLUMN'S TOP PLATE.

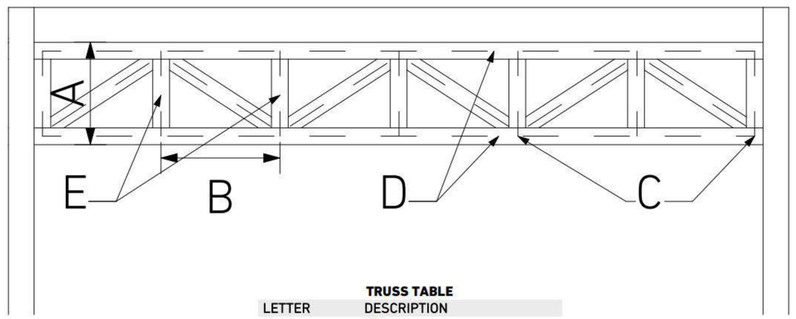

TRUSS TABLE

LETTER	DESCRIPTION
A	24"
B	16"
C	(12) #6 SCREWS 20ga
D	CSJ5 550S162X14
E	CSJ5400S162X12

Typical Truss

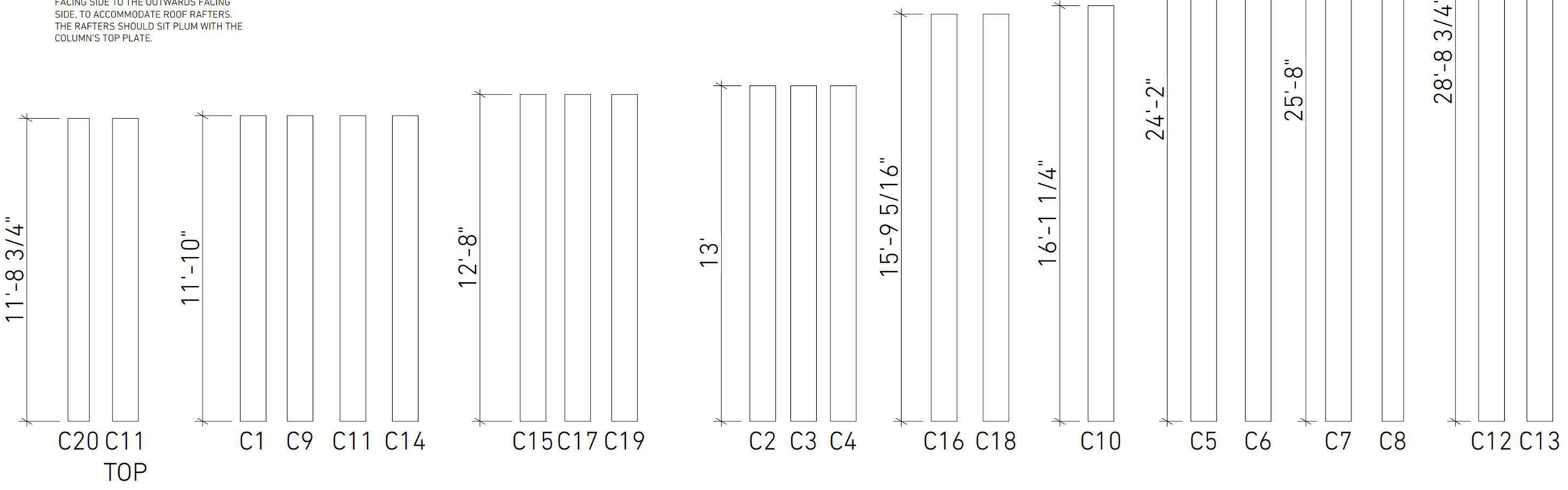

COLUMN LENGTHS

GIST RD. SFR 1

APN544-23-041; PROPOSED ADDRESS: 20555 GIST RD, LOS GATOS, CA 95033

REVISION HISTORY

S3DA Structural & Architectural Design
4196 Adams Ave. San Diego CA 92116
(619) 404-0220

Mr. Nader Moavenian
nader.m@s3da-design.com

REGISTERED PROFESSIONAL ENGINEER
BARRETT CROOM
C 057196
Exp. 12.31.202
CIVIL
STATE OF CALIFORNIA
2-11-2020

1. The contractor must check all dimensions on-site before commencing work

2. These drawings are to be read in conjunction with all relevant designer, engineer or specialist drawings and specifications

3. The contractor is responsible for providing all necessary temporary support to the building and any adjacent structures

COUNTY APPROVAL STAMP

REVISION DATE
02/11/2020

DRAWING NAME
103 CFS column schedule; Trusses

Drawing Scale

S-8

INSTALL CLASS A ROOF COVER PER SANTA CLARA COUNTY APPROVAL CONDITIONS. FOLLOW MANUFACTURER'S SPECIFICAITONS. DO NOT EXCEED 40PSF DEAD LOAD PER PERMATHERM SIP SPAN TABLE SPECIFICATIONS

PHOTOVOLTAIC CLASS A **TESLA ROOF WEIGHT**

TESLA ROOF TILES WEIGHT	LBS
1 PHOTOVOLTAIC TILE (PVT)	**23**
1 GLASS TILE (GT)	**13**

WEIGHT PER SQUARE FOOT	PSF
1 sf of PVT	**7.3**
1 sf of GT	**4.1**

COMBINATION WEIGHT	PSF
40%PVT	**5.4**
50%PVT	**5.7**
60%PVT	**6.1**
70%PVT	**6.4**
80%PVT	**6.7**
90%PVT	**7.0**
100%PVT	**7.3**

NOTE:
APPROX 32 PANELS PER 10x10' SQUARE

PermaTherm
Insulation Innovation

269 Industrial Park Rd.
Monticello, GA 31064
[p] (706) 468-7500
[f] (706) 468-7510
[e] info@permatherm.net

EPS Insulated Panels

Maximum Spans for Uniform Loads

(Units in Feet for 26-Gauge Steel Panel Skins)

Core Thickness	Total Uniform Load (lb/sq ft)						
	5	10	20	30	40	50	60
2 inch	18	13	9	7	6	5	3
3 inch	22	16	10	9	6	5	4
4 inch	25	18	13	10	8	7	6
5 inch	30	22	15	12	9	8	7
6 inch	32	23	16	13	10	9	8
8 inch	36	25	19	15	12	11	10
10 inch	41	29	20	17	14	12	11

**Uniform Load Spans based on the following: face wrinkling with a safety factor of 2; deflection of L/240 of span; or core shear with a safety factor of 5. Uniform Load Spans are rounded to the lower footage.*

** All values are calculated using core material of Type 1 (1 lb. Density) EPS Foam. Greater values can be reached with higher density foam which is available.*

Other Guiddines
PermaTherm Architectural Insulating Panels are designed to carry specified total loads, with maximum computed buckling stress not to exceed the maximum allowable buckling stress of the facings.

The inside face of all panels must be cut at girt attachments to avoid compression bucking of the exterior skin.

Wherever interior panel skins are extended to the outside (warm side) surface, a thermal break must be cut to avoid thermal conductivity.

Block panel packages should be stored above ground to keep out of water provide drainage.

Contents and logo are property of PermaTherm, Inc.
All rights reserved. Copyright 2010©

Downspout & Gutter Sizing Reports

Project Name: APN 544-23-041 GROUND FLOOR BEDROOM

Rainfall Intensity (in/hr): 3.7
Based on rainfall averages in San Francisco, CALIFORNIA (100 years)

Roof Rainfall Design Area (ft²): 1,032.00
* Area of Largest Roof Serving a Single Gutter System
Design Area manually entered by user

Gutter in Lineal Ft: 64
* Length at Largest Roof Serving a Single Gutter System

Gutter Length Serving Single DS (ft.): 32
*Assumption: downspouts are equally spaced
**Maximum gutter length to be served by a downspout is 50ft per SMACNA ASMM

M (depth to width ratio): 0.75

Min. Gutter Width (in.): 3.5 [Rectangular]

Min. Gutter Depth (in.): 3

# of Downspouts: 2

Min. Area per DS (in²): 1.56

Min. DS Size (in): 1.75 x 2.25 [Rectangular Corrugated]
*Per Table 1-3 on page 1.4 of SMACNA ASMM

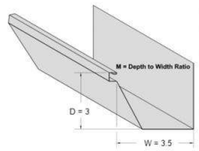

Calculations are derived using the 7th Edition of SMACNA's Architectural Sheet Metal Manual

SMACNA report for Ground Floor Bedroom Roof

Downspout & Gutter Sizing Reports

Project Name: APN 544-23-041 GYM & SAUNA

Rainfall Intensity (in/hr): 3.7
Based on rainfall averages in San Francisco, CALIFORNIA (100 years)

Roof Rainfall Design Area (ft²): 532.00
* Area of Largest Roof Serving a Single Gutter System
Design Area manually entered by user

Gutter in Lineal Ft: 50
* Length at Largest Roof Serving a Single Gutter System

Gutter Length Serving Single DS (ft.): 25
*Assumption: downspouts are equally spaced
**Maximum gutter length to be served by a downspout is 50ft per SMACNA ASMM

M (depth to width ratio): 0.75

Min. Gutter Width (in.): 3 [Rectangular]

Min. Gutter Depth (in.): 2.5

# of Downspouts: 2

Additional Downspouts: 1
*to reduce size of gutter and downspouts additional downspouts can be added

Min. Area per DS (in²): 0.81

Min. DS Size (in): 1.75 x 2.25 [Rectangular Corrugated]
*Per Table 1-3 on page 1.4 of SMACNA ASMM

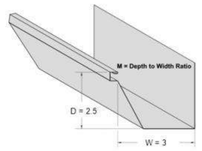

SMACNA report for Gym & Sauna Roof

Downspout & Gutter Sizing Reports

Project Name: APN 544-23-041

Rainfall Intensity (in/hr): 3.7
Based on rainfall averages in San Francisco, CALIFORNIA (100 years)

Roof Rainfall Design Area (ft²): 3,690.00
* Area of Largest Roof Serving a Single Gutter System
Design Area manually entered by user

Gutter in Lineal Ft: 144
* Length at Largest Roof Serving a Single Gutter System

Gutter Length Serving Single DS (ft.): 36
*Assumption: downspouts are equally spaced
**Maximum gutter length to be served by a downspout is 50ft per SMACNA ASMM

M (depth to width ratio): 0.75

Min. Gutter Width (in.): 5 [Rectangular]

Min. Gutter Depth (in.): 4

# of Downspouts: 4

Additional Downspouts: 1
*to reduce size of gutter and downspouts additional downspouts can be added

Min. Area per DS (in²): 2.80

Min. DS Size (in): 3 [Plain Round]
*Per Table 1-3 on page 1.4 of SMACNA ASMM

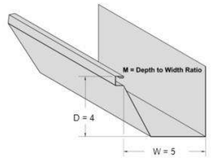

SMACNA report for Second Floor Roof

Downspout & Gutter Sizing Reports

Project Name: APN 544-23-041 SUN DECK

Rainfall Intensity (in/hr): 3.7
Based on rainfall averages in San Francisco, CALIFORNIA (100 years)

Roof Rainfall Design Area (ft²): 102.00
* Area of Largest Roof Serving a Single Gutter System
Design Area manually entered by user

Gutter in Lineal Ft: 35
* Length at Largest Roof Serving a Single Gutter System

Gutter Length Serving Single DS (ft.): 35
*Assumption: downspouts are equally spaced
**Maximum gutter length to be served by a downspout is 50ft per SMACNA ASMM

M (depth to width ratio): 0.75

Min. Gutter Width (in.): 2 [Rectangular]

Min. Gutter Depth (in.): 1.5

# of Downspouts: 1

Min. Area per DS (in²): 0.31

Min. DS Size (in): 1.75 x 2.25 [Rectangular Corrugated]
*Per Table 1-3 on page 1.4 of SMACNA ASMM

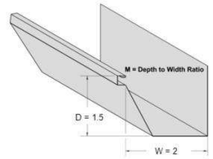

Calculations are derived using the 7th Edition of SMACNA's Architectural Sheet Metal Manual

SMACNA report for Sun Deck

GUTTER LOCATION	RAIN COLLECTION AREA	OVERALL LENGTH (FT)	MIN GUTTER DIMENSIONS	MIN DOWNSPOUT SIZE
SECOND FLOOR	3690 ft2	144	4 x 5" RECTANGULAR	4 COUNT: 1.75 x 2.25" MIN CORRUGATED RECTANGULAR
GYM & SAUNA	532 ft2	50	2.5 x 3" RECTANGULAR	2 COUNT: 1.75 x 2.25" MIN CORRUGATED RECTANGULAR
GROUND FLOOR BEDROOM	1032 ft2	64	3 x 3.5" RECTANGULAR	2 COUNT: 1.75 x 2.25" MIN CORRUGATED RECTANGULAR
SUN DECK	102 ft2	35	1.5 x 2" RECTANGULAR	CONNECTS TO SECOND FLOOR DOWNSPOUT 2
TOTAL	5355 ft2	293		

NOTE: SEE SMACNA REPORTS

GIST RD. SFR 1

APN544-23-041; PROPOSED ADDRESS: 20555 GIST RD, LOS GATOS, CA 95033

REVISION HISTORY

S3DA Structural & Architectural Design
4196 Adams Ave. San Diego CA 92116
(619) 404-0220

Mr. Nader Moavenian
nader.m@s3da-design.com

REGISTERED PROFESSIONAL ENGINEER
BARRETT CROOK
C 057199
Ex: 12-31-2021
CIVIL
STATE OF CALIFORNIA

2-11-2020

1. The contractor must check all dimensions on-site before commencing work

2. These drawings are to be read in conjunction with all relevant designer, engineer or specialist drawings and specifications

3. The contractor is responsible for providing all necessary temporary support to the building and any adjacent structures

COUNTY APPROVAL STAMP

REVISION DATE
02/11/2020

DRAWING NAME
104 Roof plan notes, reports, specs

Drawing Scale

S-9

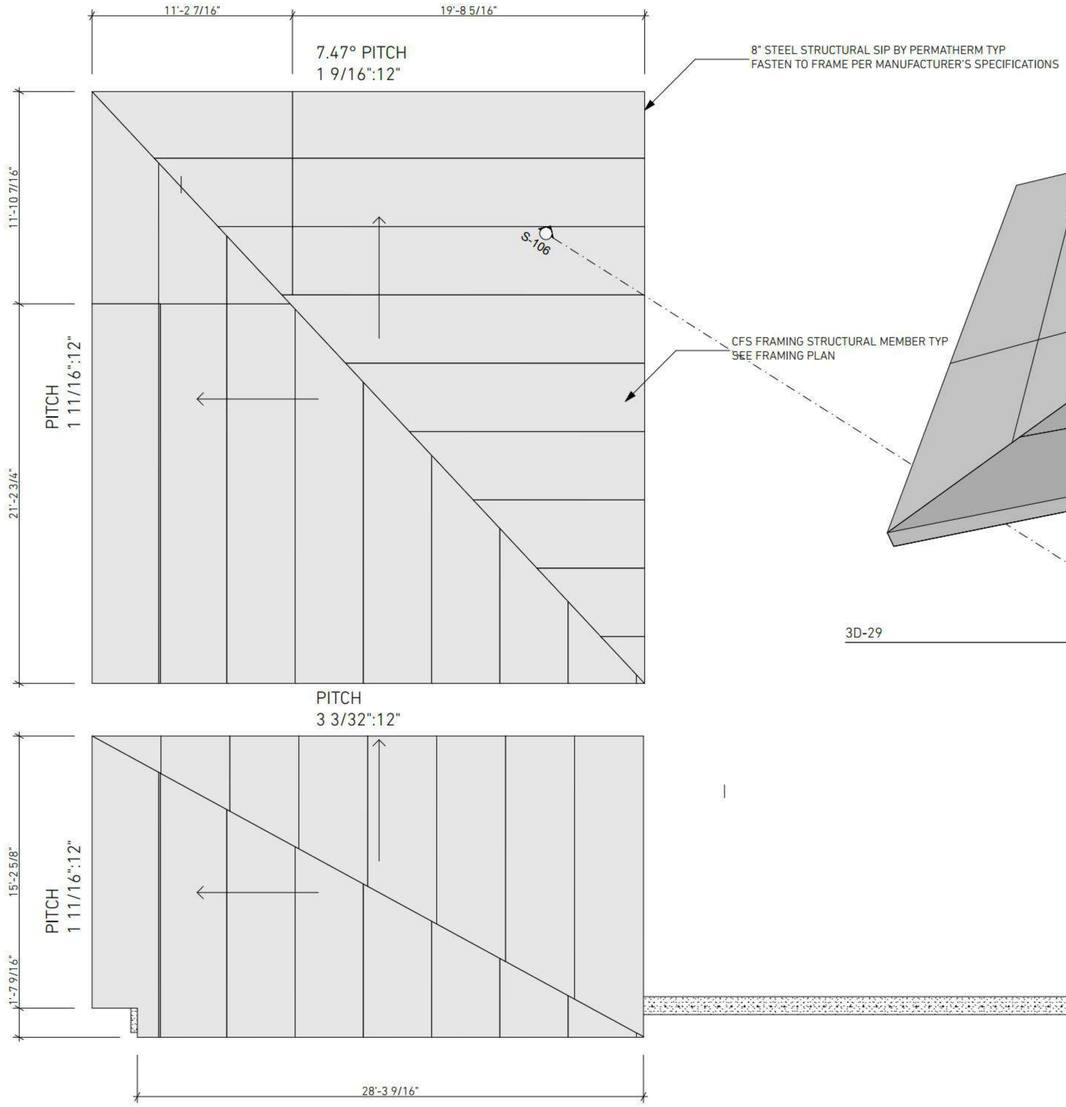

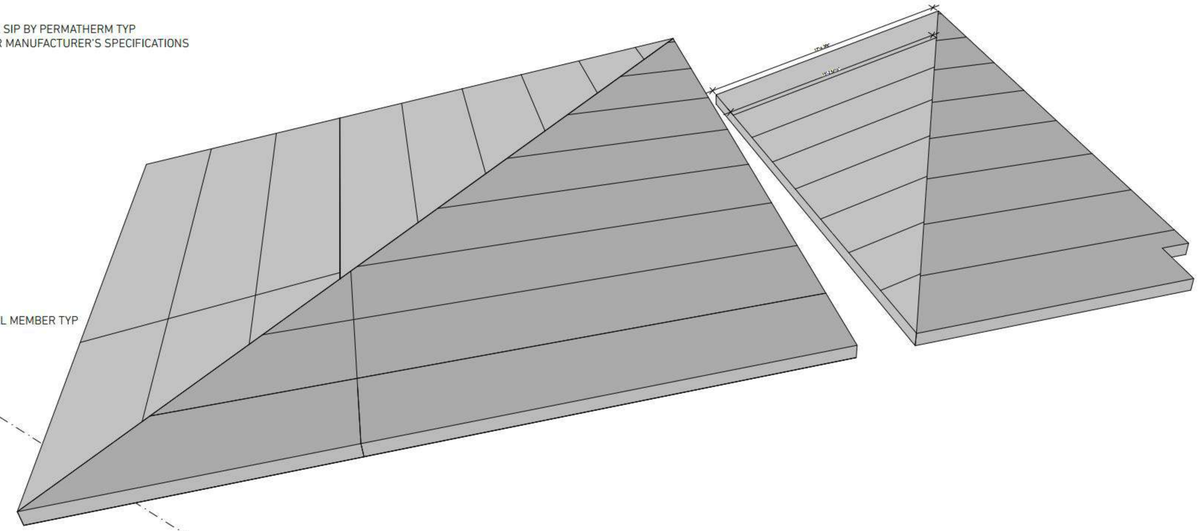

3D-29 ROOF SIP PANEL LAYOUT GROUND FLOOR. ISOMETRIC VIEW

1. ROOF LAYOUT GROUND FLOOR 1/4" = 1'-0"

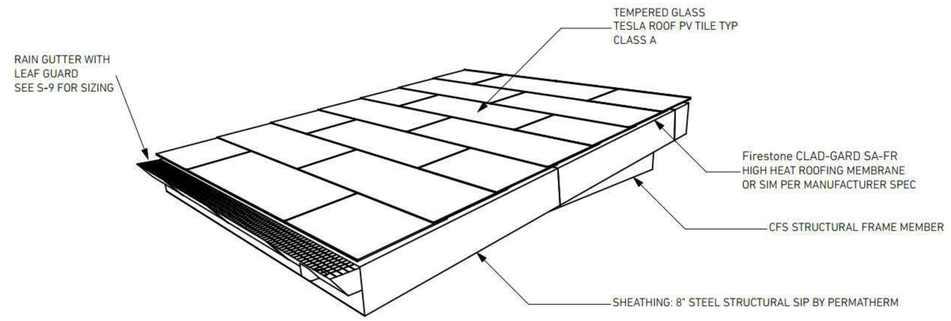

3D-30 TESLA PV ROOF DETAIL

INSTALL CLASS A ROOF COVER PER SANTA CLARA COUNTY APPROVAL CONDITIONS. FOLLOW MANUFACTURER'S SPECIFICAITONS. DO NOT EXCEED 40PSF DEAD LOAD PER PERMATHERM SIP SPAN TABLE SPECIFICATIONS

PHOTOVOLTAIC CLASS A **TESLA ROOF WEIGHT**

TESLA ROOF TILES WEIGHT	LBS
1 PHOTOVOLTAIC TILE (PVT)	**23**
1 GLASS TILE (GT)	**13**

WEIGHT PER SQUARE FOOT	PSF
1 sf of PVT	**7.3**
1 sf of GT	**4.1**

COMBINATION WEIGHT	PSF
40%PVT	**5.4**
50%PVT	**5.7**
60%PVT	**6.1**
70%PVT	**6.4**
80%PVT	**6.7**
90%PVT	**7.0**
100%PVT	**7.3**

NOTE:
APPROX 32 PANELS PER 10x10' SQUARE

GIST RD. SFR 1

APN544-23-041; PROPOSED ADDRESS: 20555 GIST RD, LOS GATOS, CA 95033

REVISION HISTORY

S3DA Structural & Architectural Design
4196 Adams Ave. San Diego CA 92116
(619) 404-0220

Mr. Nader Moavenian
nader.m@s3da-design.com

REGISTERED PROFESSIONAL ENGINEER
BARRETT CROOK
C 057186
Exp. 12.31.2021
CIVIL
STATE OF CALIFORNIA
2-11-2020

1. The contractor must check all dimensions on-site before commencing work

2. These drawings are to be read in conjunction with all relevant designer, engineer or specialist drawings and specifications

3. The contractor is responsible for providing all necessary temporary support to the building and any adjacent structures

COUNTY APPROVAL STAMP

REVISION DATE
02/11/2020

DRAWING NAME
105 Roof plan. SIP layout. Ground floor

Drawing Scale

S-10

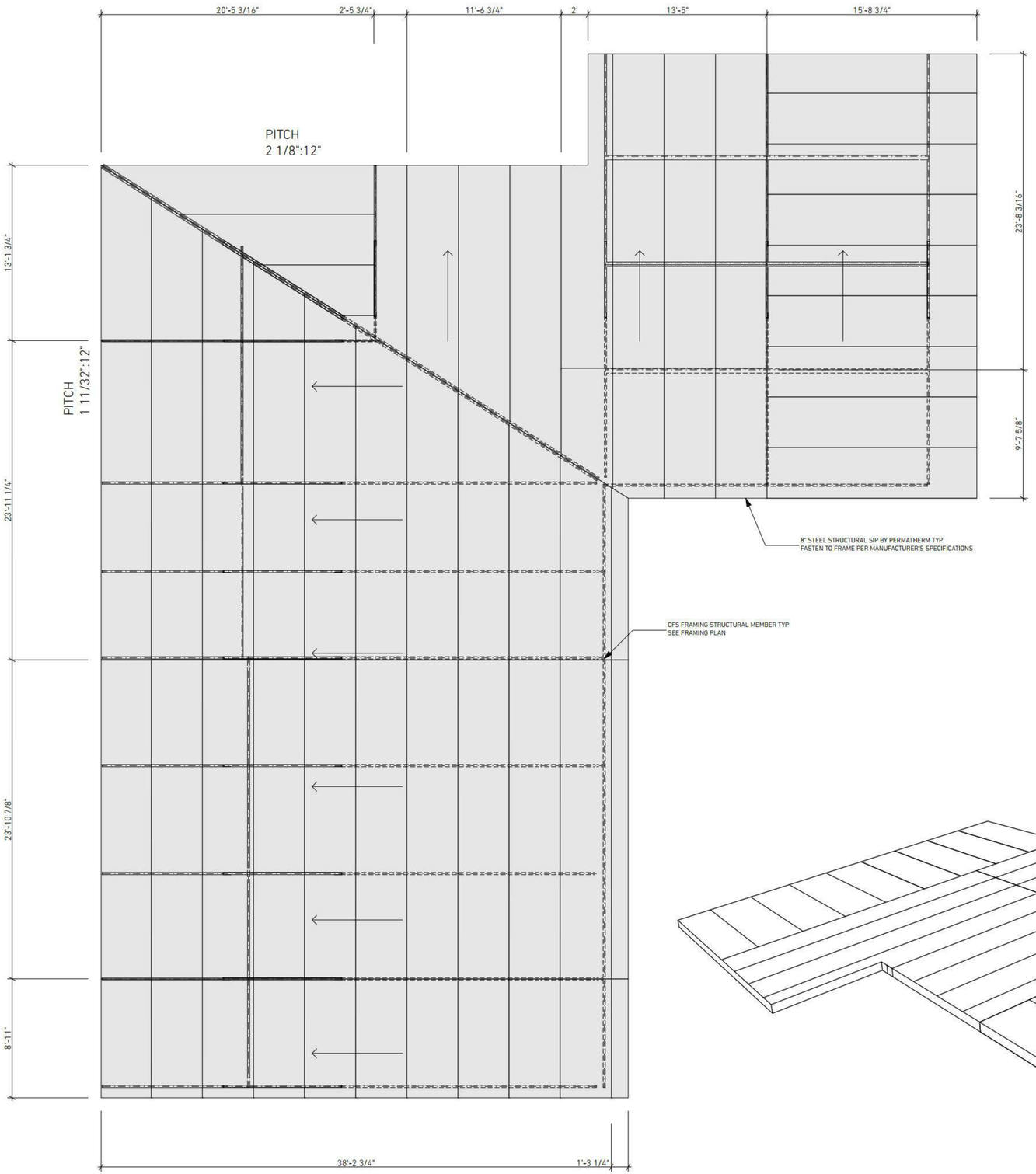

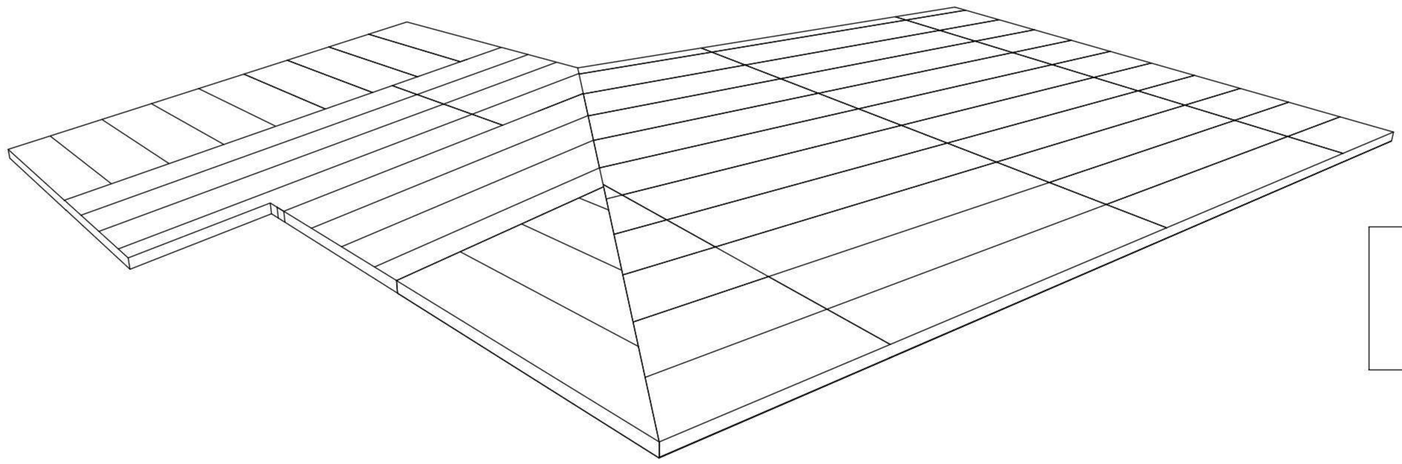

3D-31

SIP ROOF PANEL LAYOUT SECOND FLOOR

1:100

GIST RD. SFR 1

APN544-23-041; PROPOSED ADDRESS: 20555 GIST RD, LOS GATOS, CA 95033

REVISION HISTORY

S3DA Structural & Architectural Design
4196 Adams Ave. San Diego CA 92116
(619) 404-0220

Mr. Nader Moavenian
nader.m@s3da-design.com

REGISTERED PROFESSIONAL ENGINEER
BARRETT CROOK
C 057196
Exp. 12-31-2021
CIVIL
STATE OF CALIFORNIA

2-11-2020

1. The contractor must check all dimensions on-site before commencing work

2. These drawings are to be read in conjunction with all relevant designer, engineer or specialist drawings and specifications

3. The contractor is responsible for providing all necessary temporary support to the building and any adjacent structures

COUNTY APPROVAL STAMP

REVISION DATE
02/11/2020

DRAWING NAME
106 Roof plan. SIP Panel Layout. Second floor

Drawing Scale
1:50

S-11

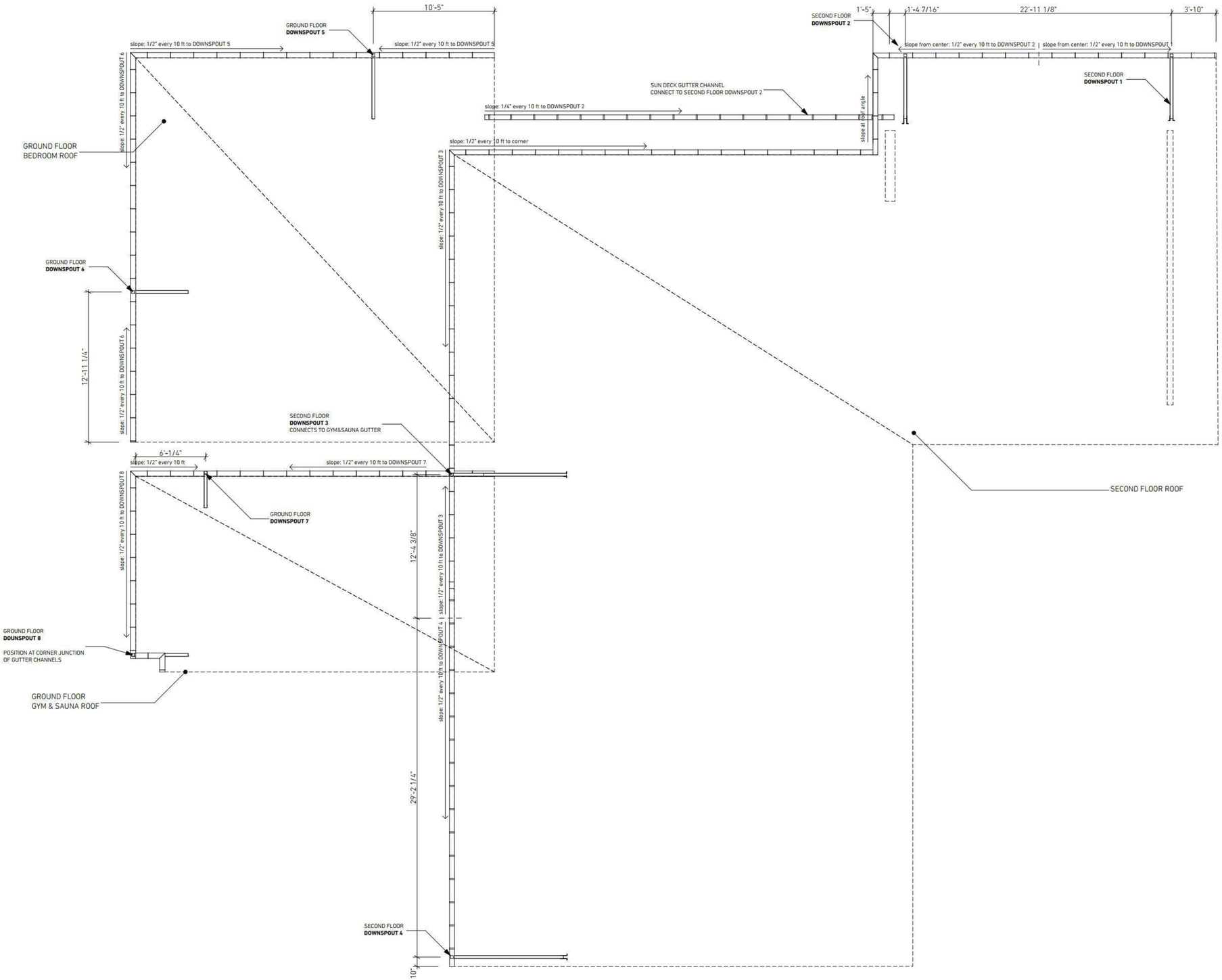

RAIN GUTTERS & DOWNSPOUTS

1:50

GIST RD. SFR 1

APN544-23-041; PROPOSED ADDRESS: 20555 GIST RD, LOS GATOS, CA 95033

REVISION HISTORY

S3DA Structural & Architectural Design
4196 Adams Ave. San Diego CA 92116
(619) 404-0220

Mr. Nader Moavenian
nader.m@s3da-design.com

REGISTERED PROFESSIONAL ENGINEER
BARRETT CROOK
C 057199
Exp.12.31.2021
CIVIL
STATE OF CALIFORNIA

2-11-2020

1. The contractor must check all dimensions on-site before commencing work

2. These drawings are to be read in conjunction with all relevant designer, engineer or specialist drawings and specifications

3. The contractor is responsible for providing all necessary temporary support to the building and any adjacent structures

COUNTY APPROVAL STAMP

REVISION DATE
02/11/2020

DRAWING NAME
107 Roof plan. Rain gutters and drains

Drawing Scale
1:50

S-12

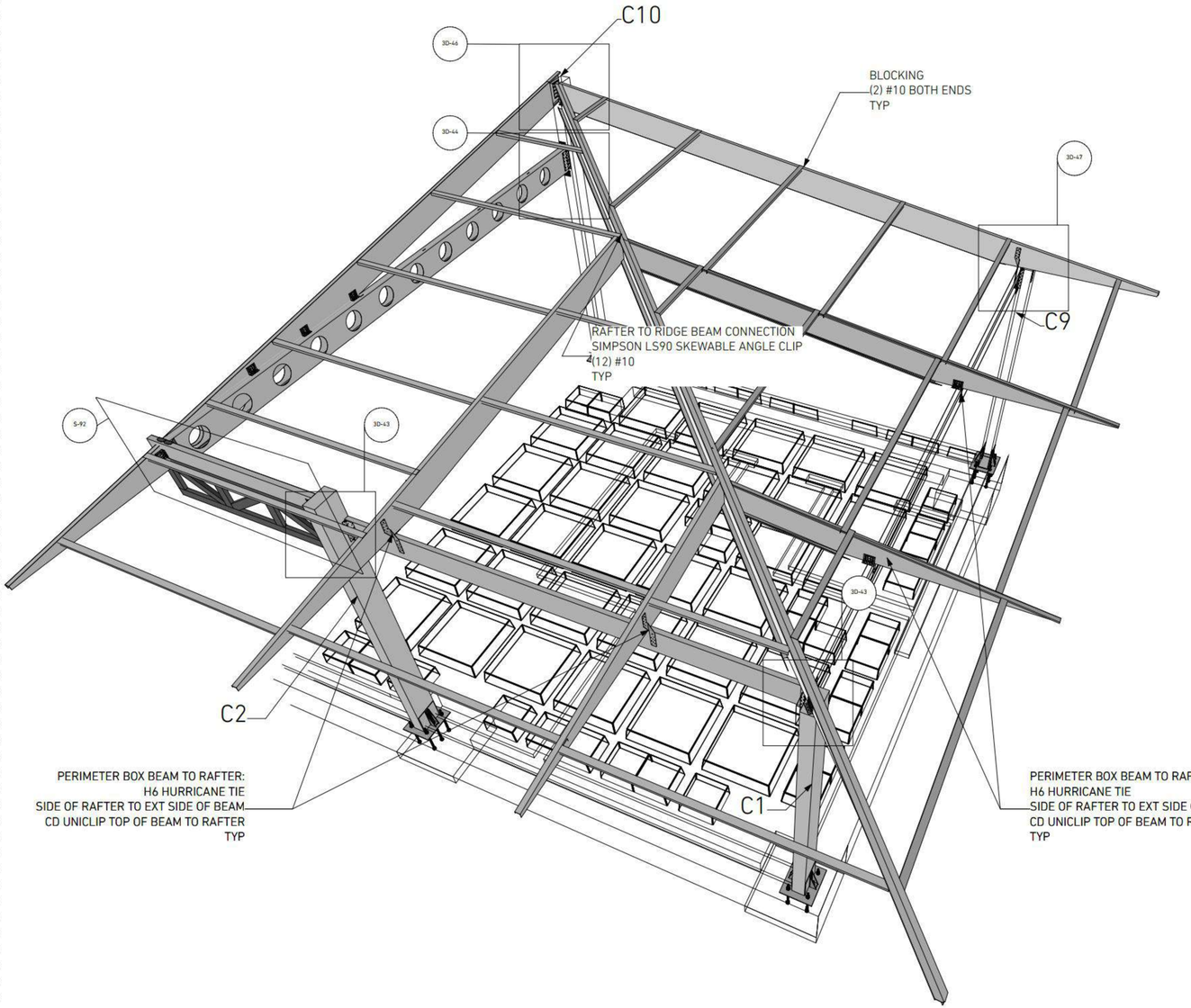

3D-45 ROOF FRAMING GF BEDROOM 1:100

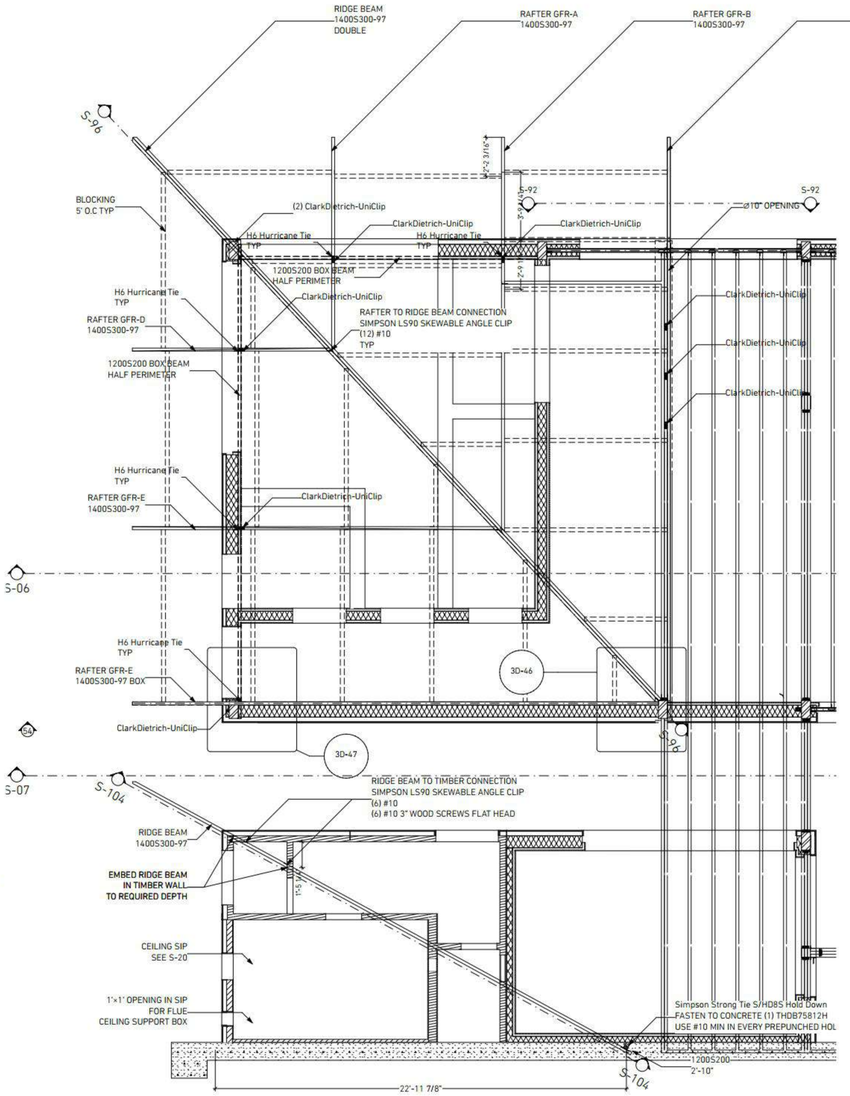

ROOF FRAMING GROUND FLOOR 1/4" = 1'-0"

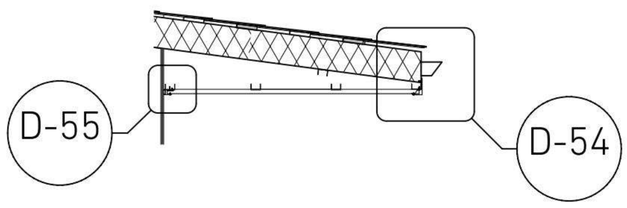

Eave detail

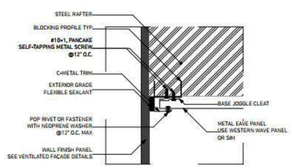

D-55 EAVE FINISH OUTER EDGE DETAIL

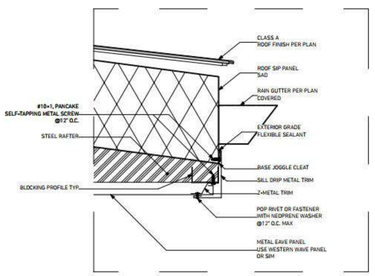

D-54 EAVE FINISH OUTER EDGE DETAIL

GIST RD. SFR 1

APN544-23-041; PROPOSED ADDRESS: 20555 GIST RD, LOS GATOS, CA 95033

REVISION HISTORY

S3DA Structural & Architectural Design
4196 Adams Ave. San Diego CA 92116
(619) 404-0220

Mr. Nader Moavenian
nader.m@s3da-design.com

REGISTERED PROFESSIONAL ENGINEER
Barrett C Groom
C 057196
Exp. 12-31-2021
CIVIL
STATE OF CALIFORNIA
2-11-2020

1. The contractor must check all dimensions on-site before commencing work

2. These drawings are to be read in conjunction with all relevant designer, engineer or specialist drawings and specifications

3. The contractor is responsible for providing all necessary temporary support to the building and any adjacent structures

COUNTY APPROVAL STAMP

REVISION DATE
02/11/2020

DRAWING NAME
108 Roof framing plan. Ground floor

Drawing Scale

S-13

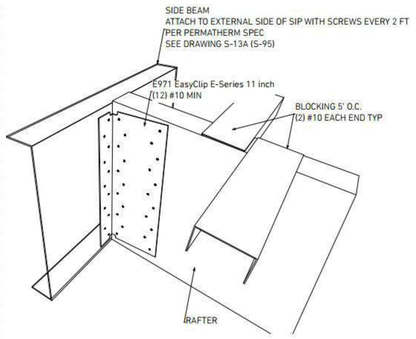

3D-55 2ND FLOOR RAFTER TO SIDE BEAM CLIP CONNECTION 1:2000

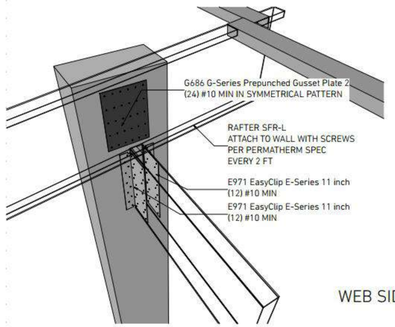

3D-56 RAFTER & HEADER BOX TO COLUMN CONNECTION TYP 1:100

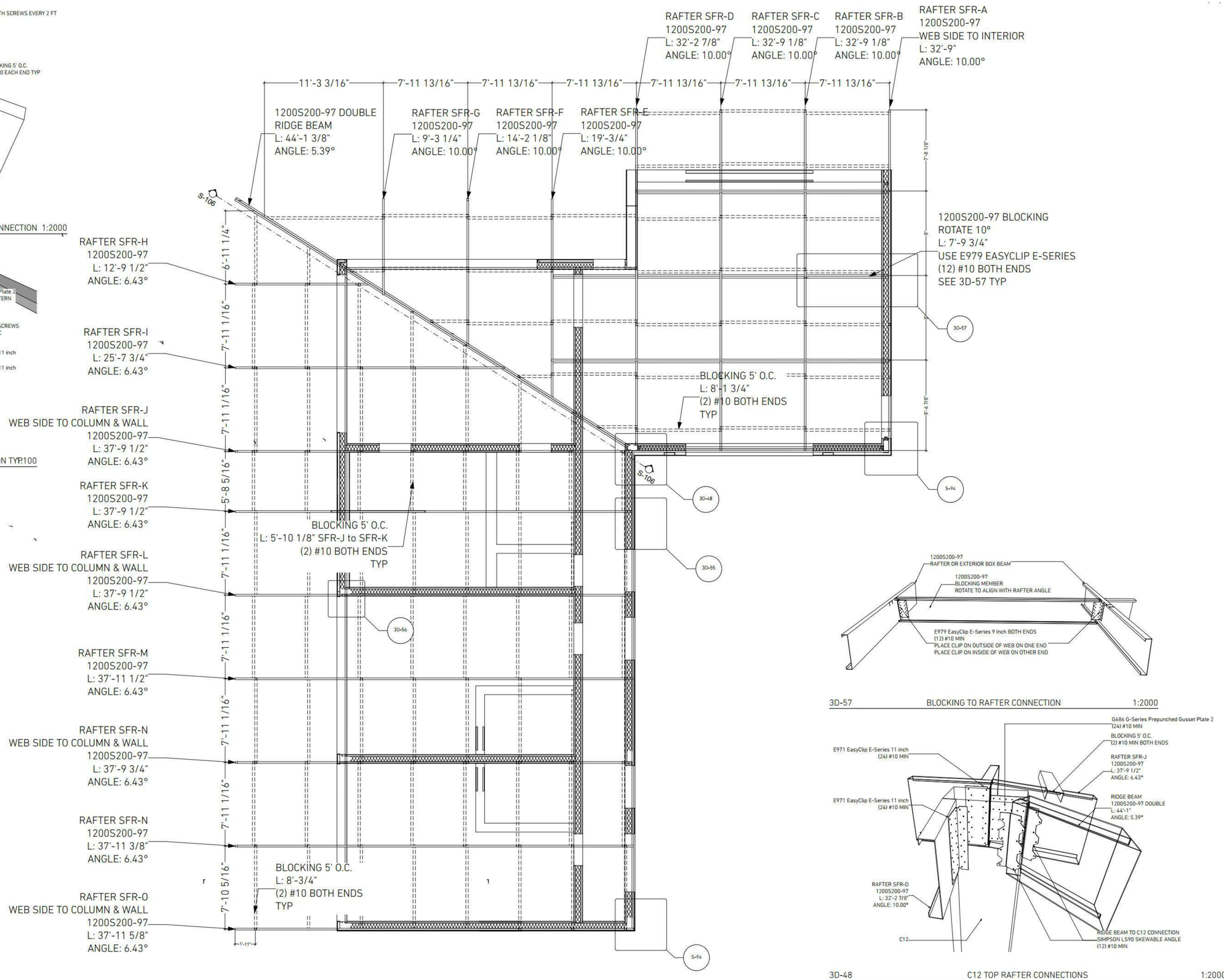

SECOND FLOOR ROOF FRAMING PLAN 1:50

3D-57 BLOCKING TO RAFTER CONNECTION 1:2000

3D-48 C12 TOP RAFTER CONNECTIONS 1:2000

GIST RD. SFR 1

APN544-23-041; PROPOSED ADDRESS: 20555 GIST RD, LOS GATOS, CA 95033

REVISION HISTORY

S3DA Structural & Architectural Design
4196 Adams Ave. San Diego CA 92116
(619) 404-0220

Mr. Nader Moavenian
nader.m@s3da-design.com

REGISTERED PROFESSIONAL ENGINEER
BARRETT CROOM
C 057196
Ex. 12-31-2021
CIVIL
STATE OF CALIFORNIA

2-11-2020

1. The contractor must check all dimensions on-site before commencing work

2. These drawings are to be read in conjunction with all relevant designer, engineer or specialist drawings and specifications

3. The contractor is responsible for providing all necessary temporary support to the building and any adjacent structures

COUNTY APPROVAL STAMP

REVISION DATE
02/11/2020

DRAWING NAME
109 Roof framing plan. Second floor

Drawing Scale

S-14

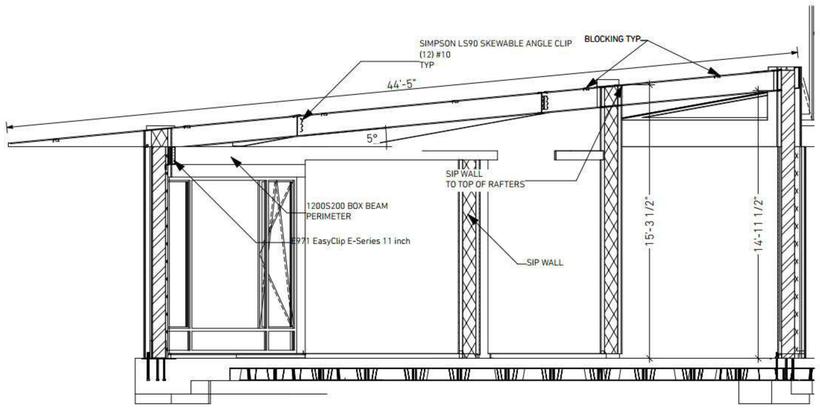

S-96 Roof ridge beam section. Ground floor. 1/4" = 1'-0"

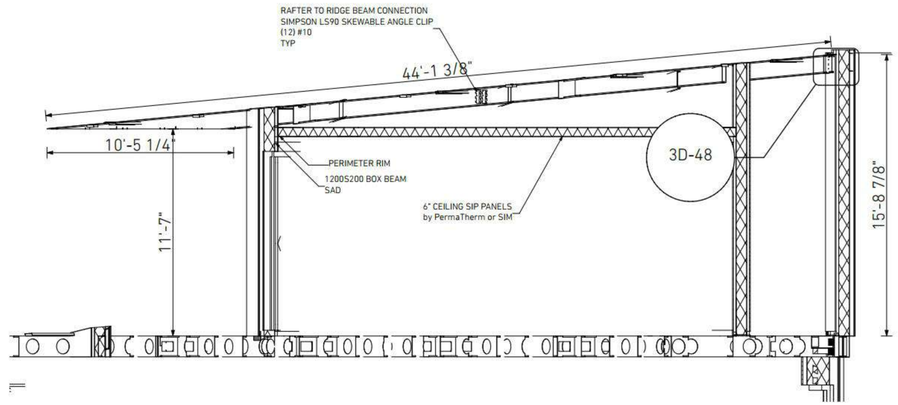

S-106 Roof ridge beam section. 2nd floor 1/4" = 1'-0"

GIST RD. SFR 1

APN544-23-041; PROPOSED ADDRESS: 20555 GIST RD, LOS GATOS, CA 95033

REVISION HISTORY

S3DA Structural & Architectural Design
4196 Adams Ave. San Diego CA 92116
(619) 404-0220

Mr. Nader Moavenian
nader.m@s3da-design.com

REGISTERED PROFESSIONAL ENGINEER
BARRETT CROOK
C 057196
Ex. 12-31-202
CIVIL
STATE OF CALIFORNIA
2-11-2020

1. The contractor must check all dimensions on-site before commencing work

2. These drawings are to be read in conjunction with all relevant designer, engineer or specialist drawings and specifications

3. The contractor is responsible for providing all necessary temporary support to the building and any adjacent structures

COUNTY APPROVAL STAMP

REVISION DATE
02/11/2020

DRAWING NAME
110 Roof framing plan. Sections

Drawing Scale

S-15

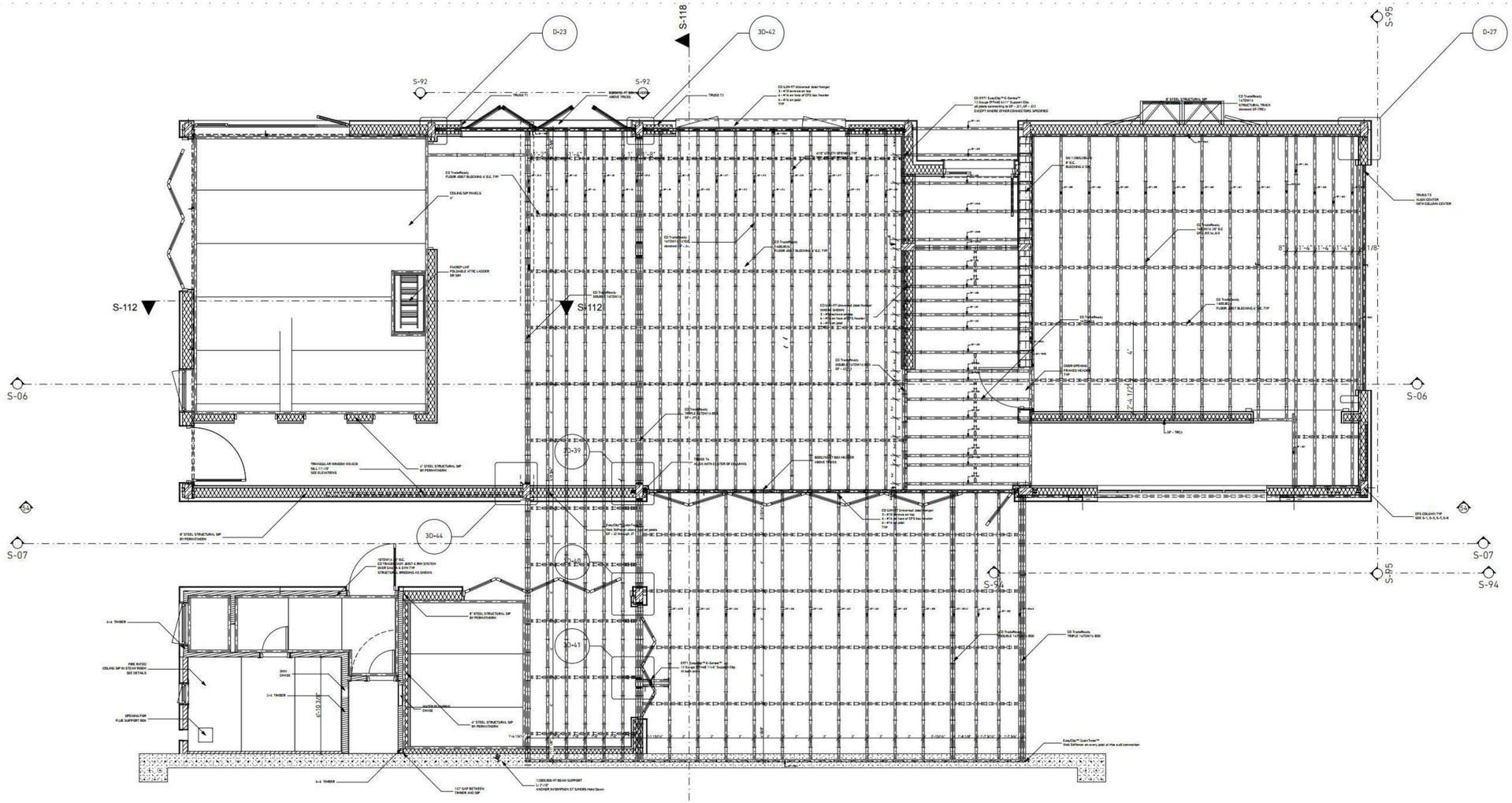

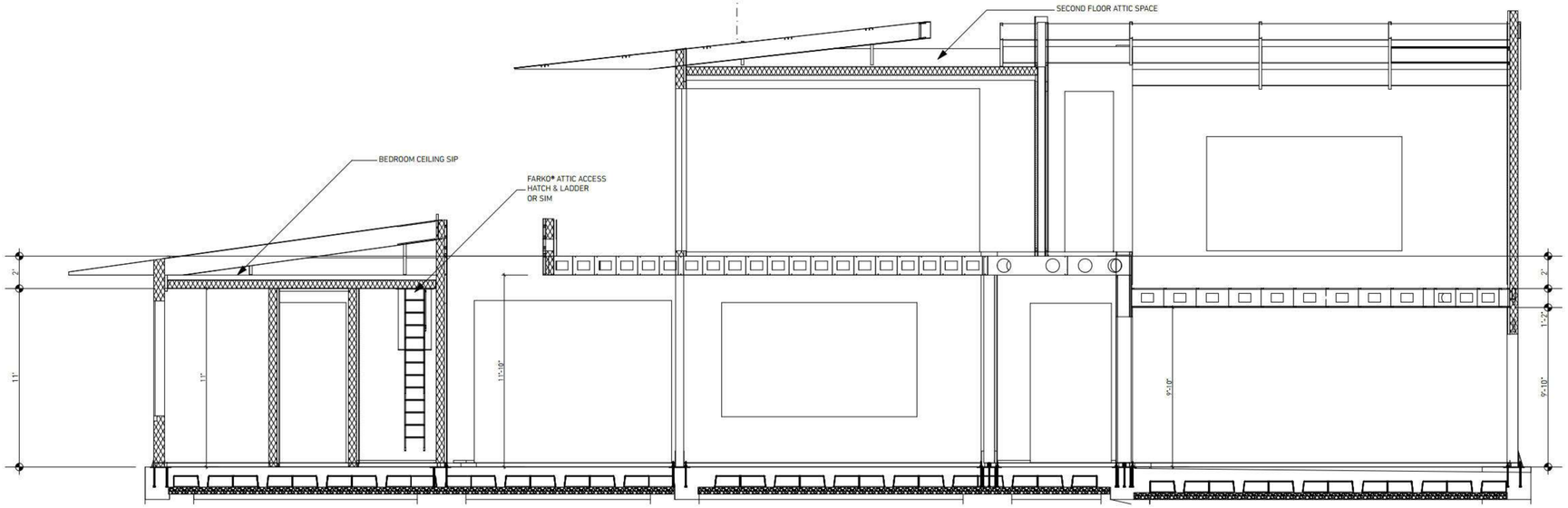

S-06 Joist elevations 1:50

GIST RD. SFR 1

APN544-23-041; PROPOSED ADDRESS: 20555

GIST RD, LOS GATOS, CA 95033

REVISION HISTORY

S3DA Structural & Architectural Design
4196 Adams Ave. San Diego CA 92116
(619) 404-0220

Mr. Nader Moavenian
nader.m@s3da-design.com

REGISTERED PROFESSIONAL ENGINEER
BARRETT CROOK
C 057196
Exp. 12-31-2021
CIVIL
STATE OF CALIFORNIA

2-11-2020

1. The contractor must check all dimensions on-site before commencing work

2. These drawings are to be read in conjunction with all relevant designer, engineer or specialist drawings and specifications

3. The contractor is responsible for providing all necessary temporary support to the building and any adjacent structures

COUNTY APPROVAL STAMP

REVISION DATE
02/11/2020

DRAWING NAME
111 Framing Plan Ground Floor

Drawing Scale

S-16

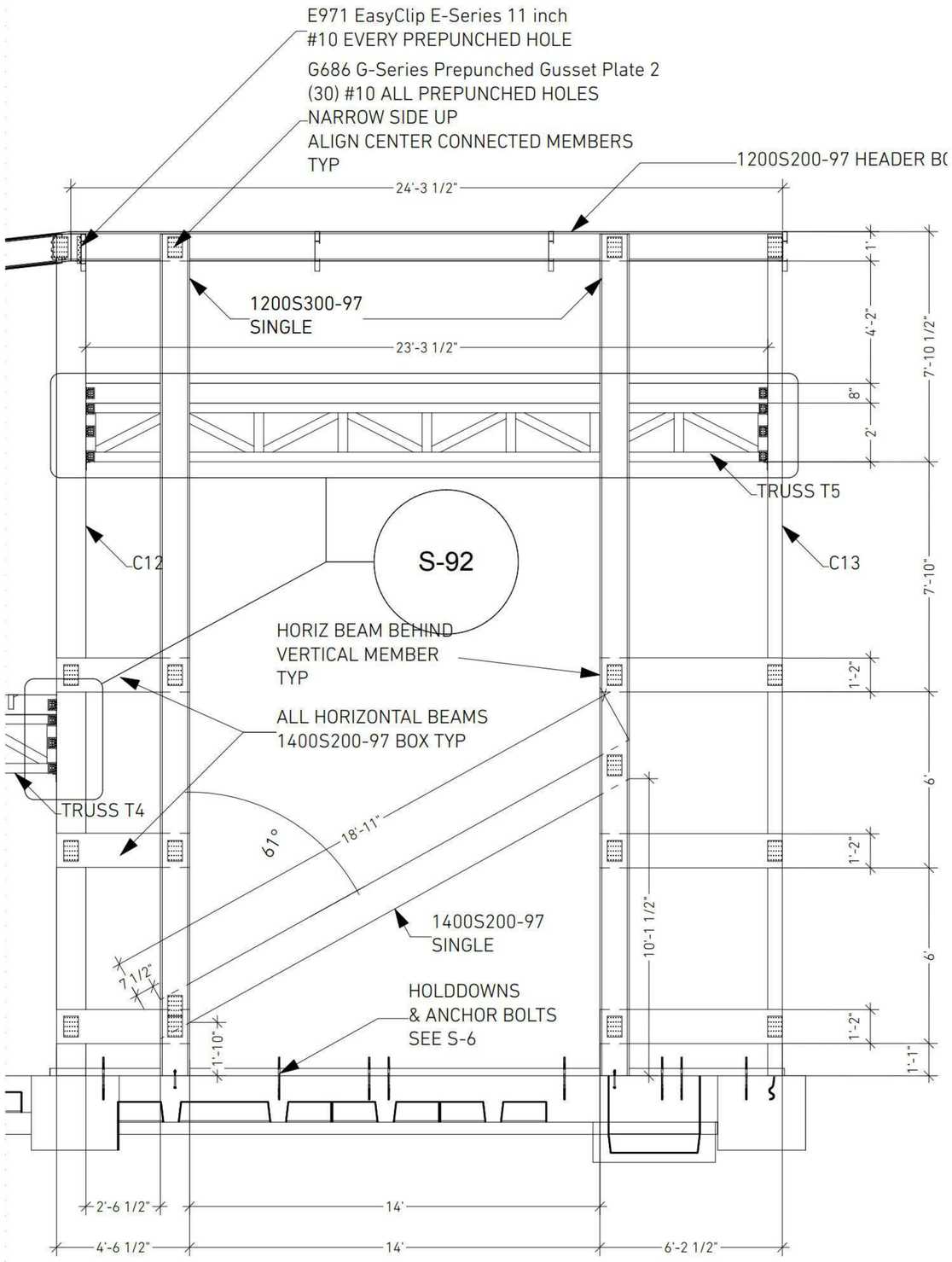

S-94 STEEL FRAMING ELEVATION: MECH ROOM WALL FRAMING

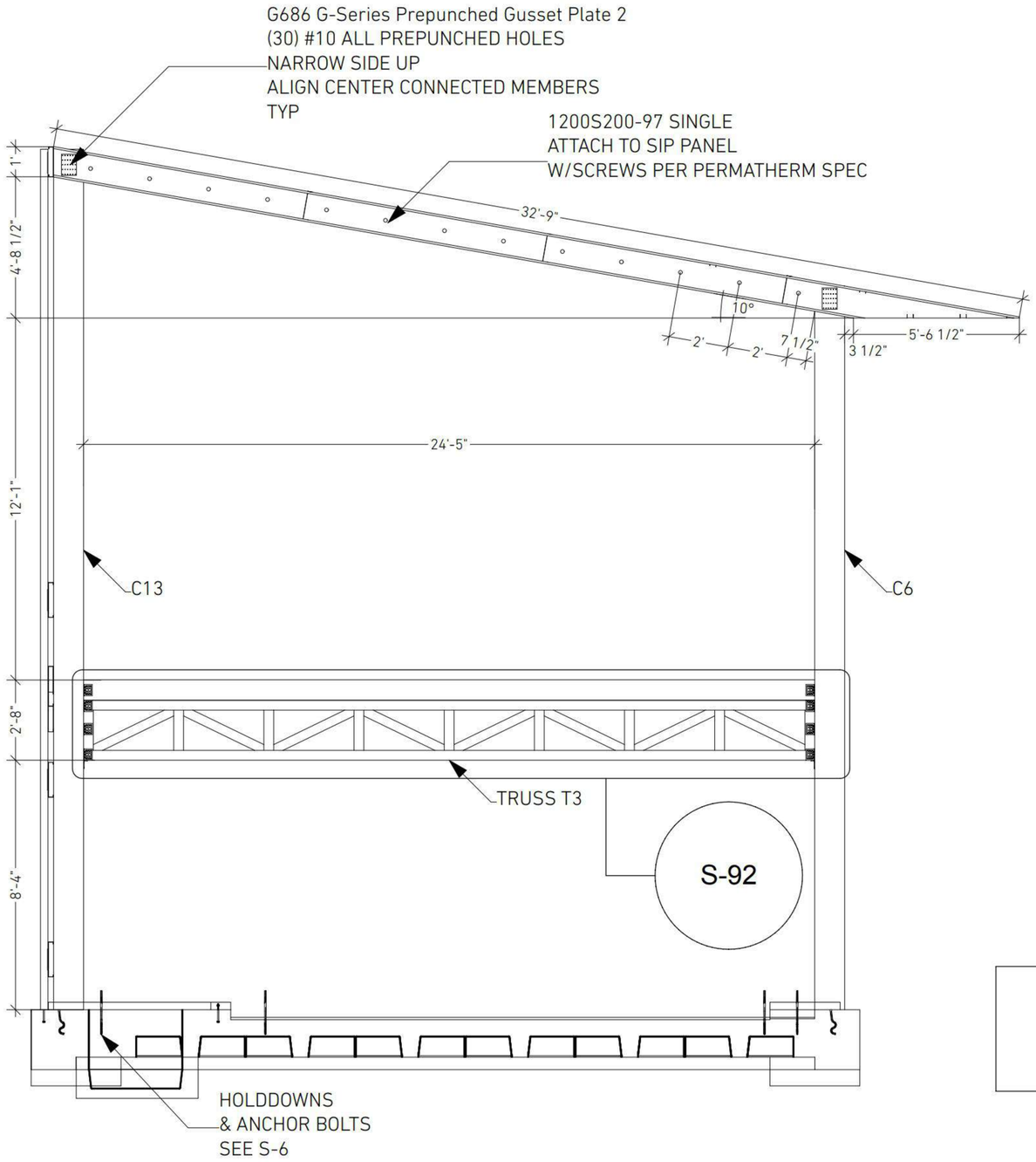

S-95 STEEL FRAMING ELEVATION: GARAGE ENTRANCE WALL FRAMING

GIST RD. SFR 1

APN544-23-041; PROPOSED ADDRESS: 20555 GIST RD, LOS GATOS, CA 95033

REVISION HISTORY

S3DA Structural & Architectural Design
4196 Adams Ave. San Diego CA 92116
(619) 404-0220

Mr. Nader Moavenian
nader.m@s3da-design.com

REGISTERED PROFESSIONAL ENGINEER
BARRETT CROOK
C 057199
Exp. 12-31-2021
CIVIL
STATE OF CALIFORNIA
2-11-2020

1. The contractor must check all dimensions on-site before commencing work

2. These drawings are to be read in conjunction with all relevant designer, engineer or specialist drawings and specifications

3. The contractor is responsible for providing all necessary temporary support to the building and any adjacent structures

COUNTY APPROVAL STAMP

REVISION DATE
02/11/2020

DRAWING NAME
112 CFS framing & connection details

Drawing Scale

S-17

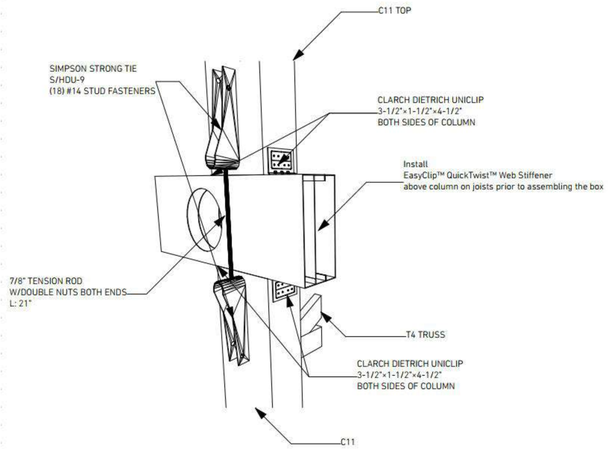

3D-39 C11 CONNECTION DETAILS 1:100

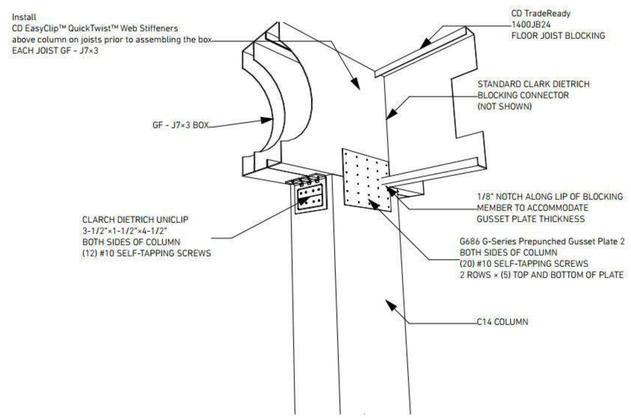

3D-40 C14 CONNECTION DETAIL 1:100

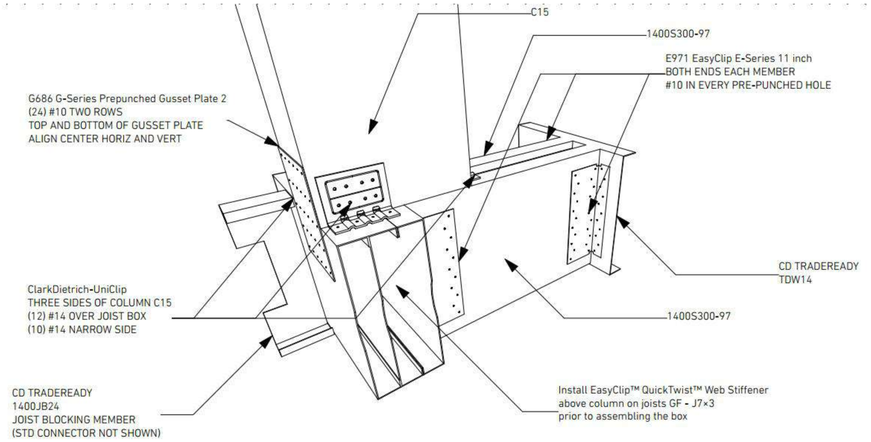

3D-41 C15 CONNECTION

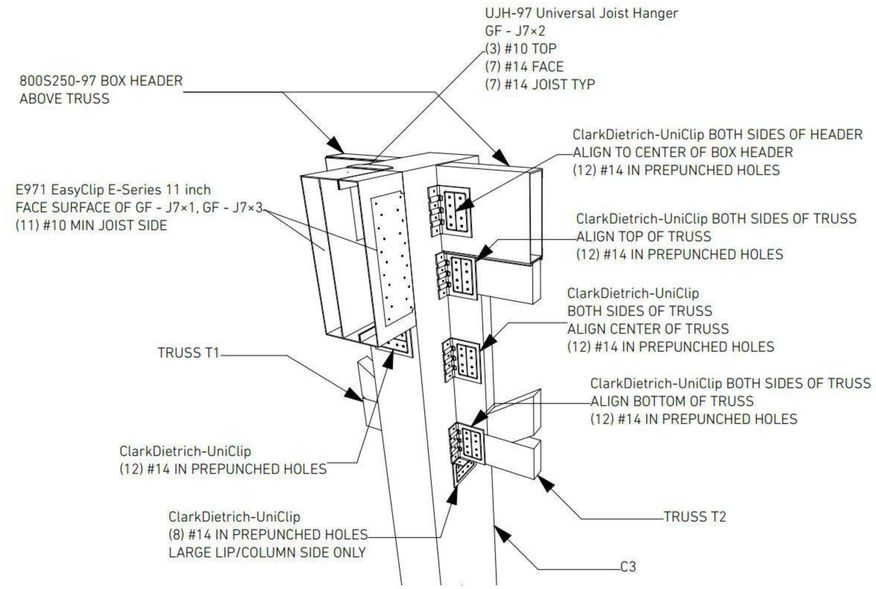

3D-42 C3 CONNECTIONS

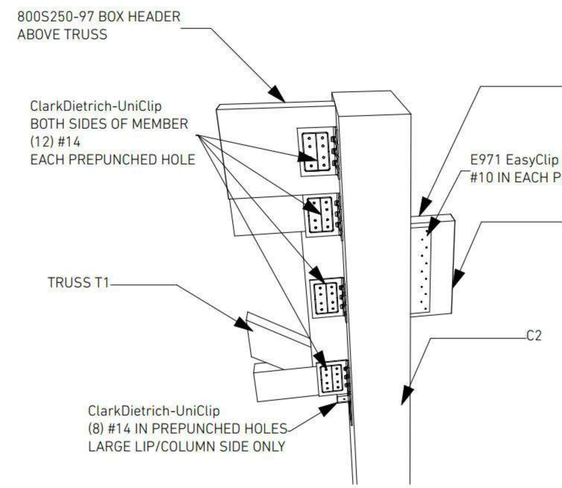

3D-43 C2 CONNECTIONS 1:100

TRUSS TABLE	
LETTER	DESCRIPTION
A	24"
B	16"
C	(12) #6 SCREWS 20ga
D	CSJ5 550S162X14
E	CSJ5 400S162X12

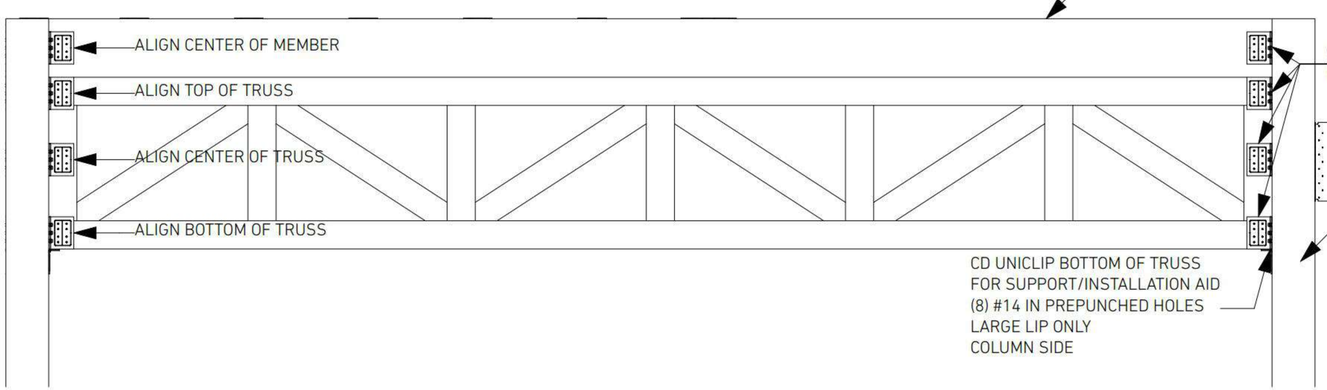

S-92 TYPICAL TRUSS TO COLUMN CONNECTION 1:100

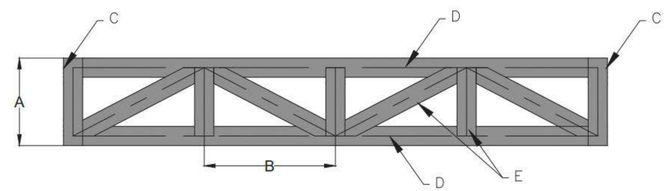

27 TRUSS-T1 DETAIL
NTS

GIST RD. SFR 1

APN544-23-041; PROPOSED ADDRESS: 20555 GIST RD, LOS GATOS, CA 95033

REVISION HISTORY

S3DA Structural & Architectural Design
4196 Adams Ave, San Diego CA 92116
(619) 404-0220

Mr. Nader Moavenian
nader.m@s3da-design.com

REGISTERED PROFESSIONAL ENGINEER
BARRETT CROOK
C 057199
Exp. 12-31-2021
CIVIL
STATE OF CALIFORNIA

2-11-2020

1. The contractor must check all dimensions on-site before commencing work

2. These drawings are to be read in conjunction with all relevant designer, engineer or specialist drawings and specifications

3. The contractor is responsible for providing all necessary temporary support to the building and any adjacent structures

COUNTY APPROVAL STAMP

REVISION DATE
02/11/2020

DRAWING NAME
114 CFS connection details. Ground floor

S-19

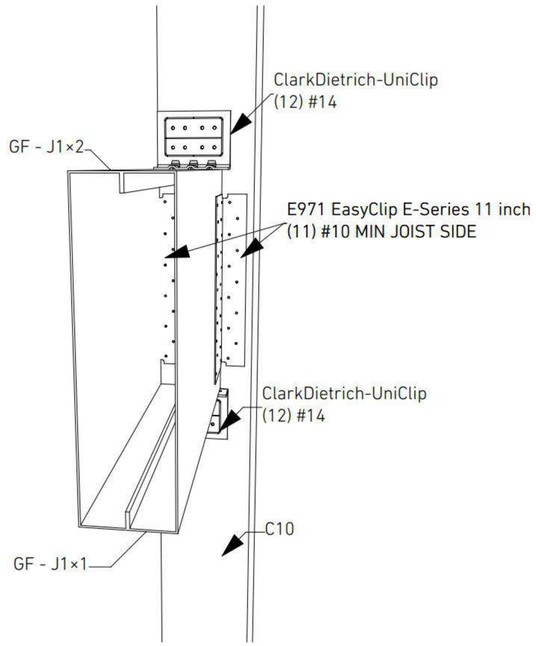

3D-44 C10 TO BOX BEAM CONNECTION

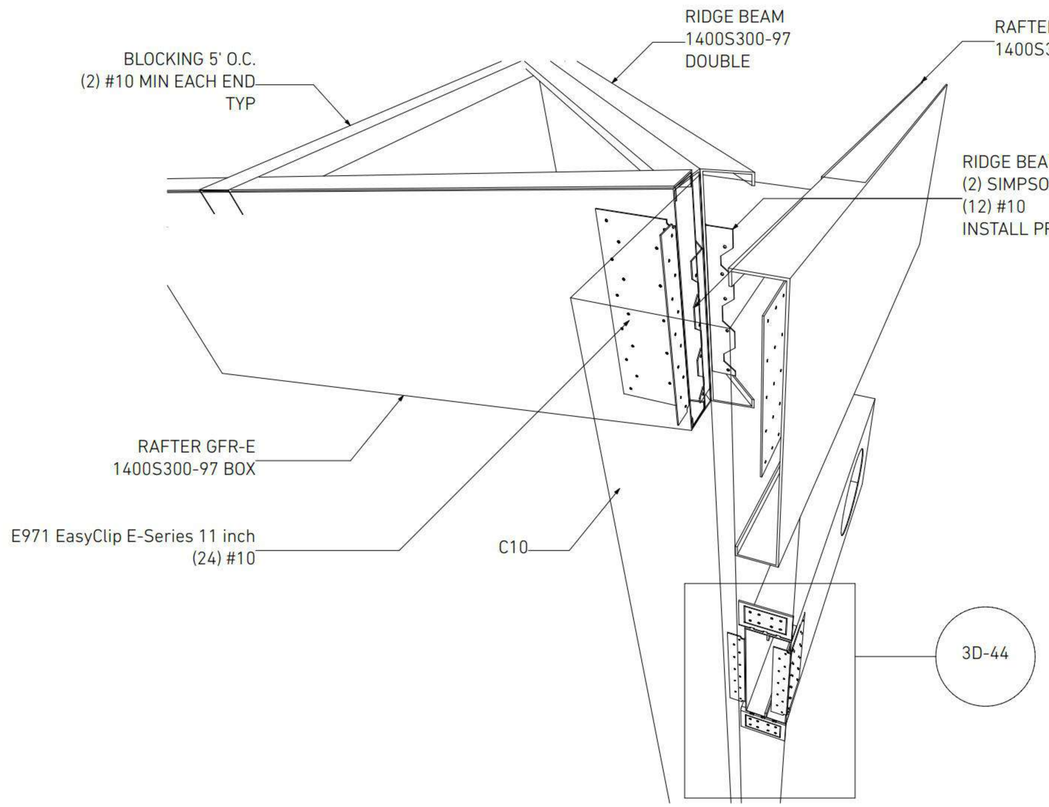

3D-46 C10 BEAM & RAFTER CONNECTIONS

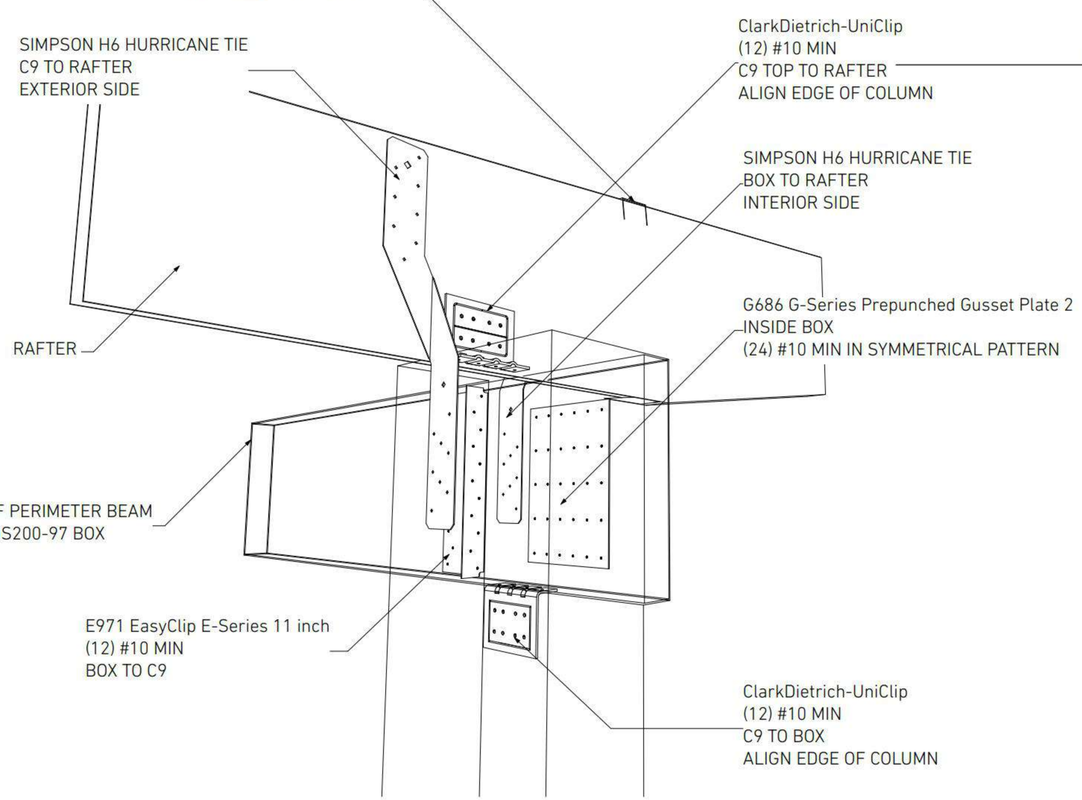

3D-47 C9 TOP CONNECTION DETAIL

GIST RD. SFR 1

APN544-23-041; PROPOSED ADDRESS: 20555 GIST RD, LOS GATOS, CA 95033

REVISION HISTORY

S3DA Structural & Architectural Design
4196 Adams Ave. San Diego CA 92116
(619) 404-0220

Mr. Nader Moavenian
nader.m@s3da-design.com

REGISTERED PROFESSIONAL ENGINEER
BARRETT CROOK
C 057186
Exp. 12-31-202
CIVIL
STATE OF CALIFORNIA

2-11-2020

1. The contractor must check all dimensions on-site before commencing work

2. These drawings are to be read in conjunction with all relevant designer, engineer or specialist drawings and specifications

3. The contractor is responsible for providing all necessary temporary support to the building and any adjacent structures

COUNTY APPROVAL STAMP

REVISION DATE
02/11/2020

DRAWING NAME
115 CFS connection details

Drawing Scale

S-20

The CAD detail library is intended to provide general framing details only and does not replace the judgments and designs of a qualified architect and/or engineer. The details are provided as a starting tool to assist the user in creating and detailing cold-formed steel framing construction details. Each detail including accompanying text must be thoroughly evaluated and approved by a qualified architect or engineer. | Find over 500 CAD details at cad.clarkdietrich.com | © Copyright 2015 ClarkDietrich Building Systems

NOTES:
1) ATTACH SHEATHING TO BLOCKING W/(4) #8 SCREWS OR EQUIVALENT.
2) BLOCK LENGTH SHALL BE 1/8" (MIN.) TO 1" (MAX.) SHORTER THAN JOIST SPACE.
3) SPACE BLOCKS @ 12'o.c. (MAX.), AND EA. END OF JOIST RUN.

TABLE T.1

SUPPORT TYPE	SUGGESTED FASTENER
STRUCTURAL STEEL, CONCRETE, OR CMU BEARING	0.145"ø P.D.F.
WOOD	#8(MIN) APPROPRIATE SCREW
LIGHT GAUGE METAL FRAMING	#10-16 SCREWS

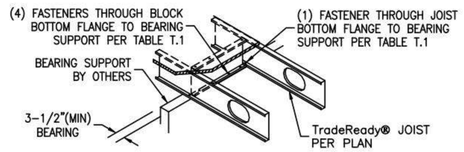

F1220 INT. JOIST BEARING – STANDARD

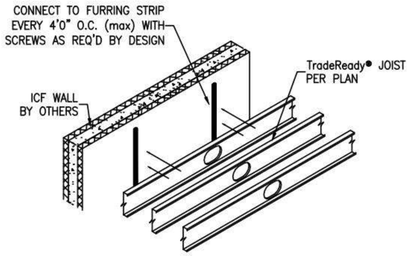

F1155 ICF – JOISTS PARALLEL TO WALL

TABLE T.1

JOIST DEPTH	CLIP LENGTH (X)
7-1/4" – 8"	5"
9-1/4" – 10"	7"
11-1/4" – 14"	9"

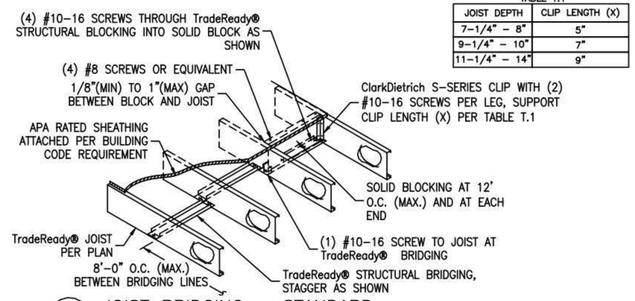

F2100 JOIST BRIDGING – STANDARD

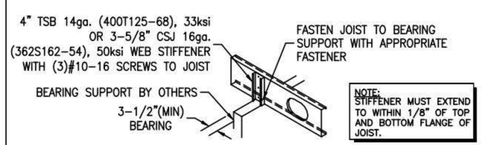

NOTE: STIFFENER MUST EXTEND TO WITHIN 1/8" OF TOP AND BOTTOM FLANGE OF JOIST.

F1300 WEB STIFFENER – STANDARD

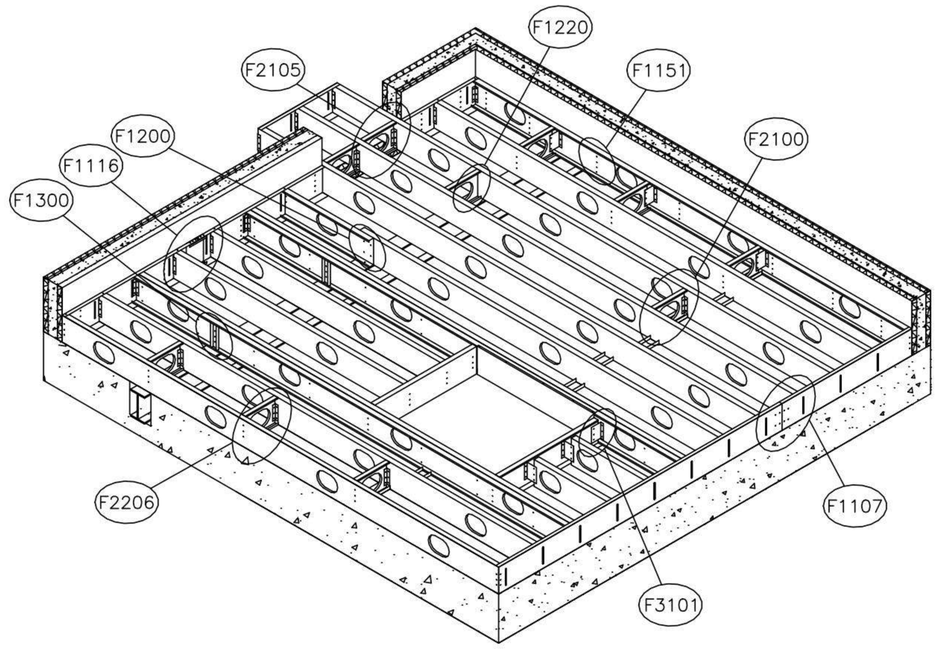

NOTES:
1) ClarkDietrich E-SERIES SUPPORT CLIP, CLIP GAUGE AND FASTENERS AS REQUIRED BY DESIGN.
2) SUPPORT CLIP LENGTH PER TABLE T.1.

TABLE T.1

JOIST DEPTH	CLIP LENGTH (X)
7-1/4" – 8"	5"
9-1/4" – 10"	7"
11-1/4" – 14"	9"

F3101 SUPPORT CLIP – ClarkDietrich E-SERIES

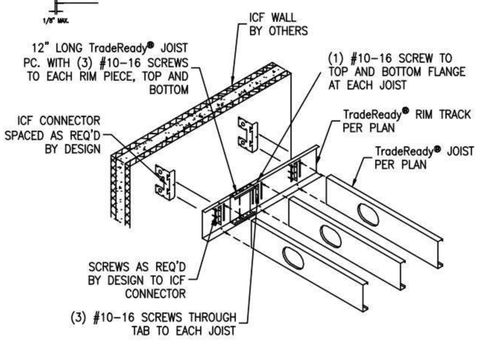

F1116 JOIST RIM – RIM SPLICE – ICF

NOTE: LOAD BEARING WALL FRAMING ABOVE AND BELOW MUST ALIGN WITH JOISTS, OTHERWISE E.O.R. REVIEW REQUIRED TO VERIFY WALL LOAD IS TRANSFERRED AT JOIST LOCATIONS.

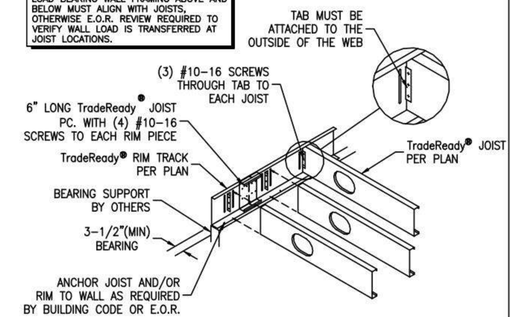

F1107 JOIST RIM – RIM SPLICE

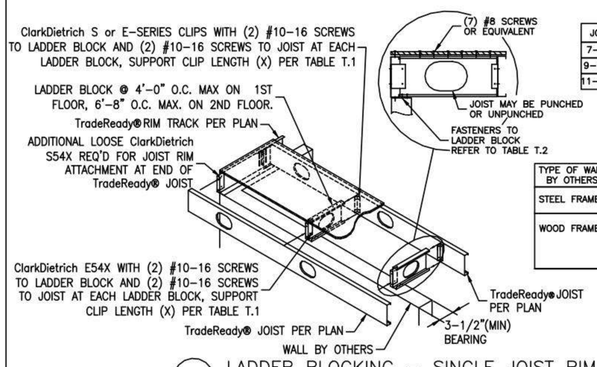

TABLE T.1

JOIST DEPTH	CLIP LENGTH (X)
7-1/4" – 8"	5"
9-1/4" – 10"	7"
11-1/4" – 14"	9"

TABLE T.2

TYPE OF WALL BY OTHERS	(#) OF FASTENERS
STEEL FRAMED	(4) #10-16 SCREWS MIN. SPACING & EDGE DIST.= 1/2"
WOOD FRAMED	(5) COMMON NAILS #8d OR #8 WOOD SCREWS (1-1/2") MIN. EDGE DIST.= 1/2"o.c. SPACING= 1/2"o.c.

F2206 LADDER BLOCKING – SINGLE JOIST RIM

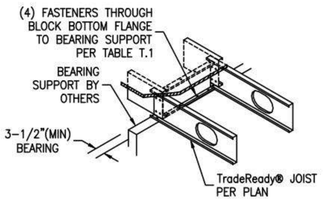

NOTES:
1) ATTACH BLOCKING TO SHEATHING W/(4) #8 SCREWS OR EQUIVALENT.
2) BLOCK LENGTH SHALL BE 1/8" (MIN.) TO 1" (MAX.) SHORTER THAN JOIST SPACE.
3) SPACE BLOCKS @ 12'o.c. (MAX.), AND EA. END OF JOIST RUN.
4) USE (4) # 10-16 SCREWS AS SHOWN AT JOIST LAP.

TABLE T.1

SUPPORT TYPE	SUGGESTED FASTENER
STRUCTURAL STEEL, CONCRETE, OR CMU BEARING	0.145"ø P.D.F.
WOOD	#8(MIN) APPROPRIATE SCREW
LIGHT GAUGE METAL FRAMING	#10-16 SCREWS

F1200 JOIST LAP – STANDARD

TABLE T.1

SUPPORT TYPE	SUGGESTED FASTENER
STRUCTURAL STEEL, CONCRETE, OR CMU BEARING	0.145"ø P.D.F.
WOOD	#8(MIN) APPROPRIATE SCREW
LIGHT GAUGE METAL FRAMING	#10-16 SCREWS

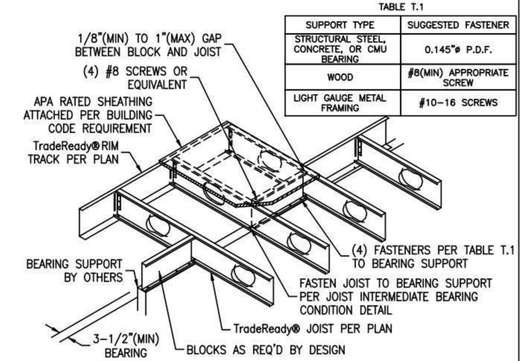

F2105 JOIST BRIDGING–SOLID BLOCK'G @ CANTILEVER

TradeReady® FLOOR JOIST SYSTEM REFERENCE PLAN

Engineering Services: (877) 832-3206 Technical Services: (888) 437-3244

ClarkDietrich BUILDING SYSTEMS
9100 Centre Pointe Dr. West Chester, OH 45069
Suite 210 Phone: (513) 870-1100

GIST RD. SFR 1

APN544-23-041; PROPOSED ADDRESS: 20555 GIST RD, LOS GATOS, CA 95033

REVISION HISTORY

S3DA Structural & Architectural Design
4196 Adams Ave. San Diego CA 92116
(619) 404-0220

Mr. Nader Moavenian
nader.m@s3da-design.com

REGISTERED PROFESSIONAL ENGINEER BARRETT CROOK C 057186 Exp. 12-31-2021 CIVIL STATE OF CALIFORNIA

2-11-2020

1. The contractor must check all dimensions on-site before commencing work
2. These drawings are to be read in conjunction with all relevant designer, engineer or specialist drawings and specifications
3. The contractor is responsible for providing all necessary temporary support to the building and any adjacent structures

COUNTY APPROVAL STAMP

REVISION DATE
02/11/2020

DRAWING NAME
116 TradeReady® CFS Joist System Details

Drawing Scale

S-21

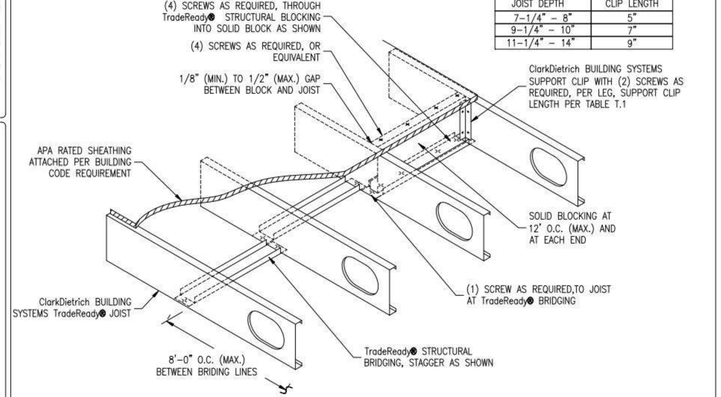

TABLE T.1

JOIST DEPTH	CLIP LENGTH
7-1/4" – 8"	5"
9-1/4" – 10"	7"
11-1/4" – 14"	9"

1 TradeReady® STRUCTURAL BRACING DETAIL
ClarkDietrich TradeReady Floor Joist System

The CAD detail library is intended to provide general framing details only and does not replace the judgments and designs of a qualified architect and/or engineer. The details are provided as a starting tool to assist the user in creating and detailing cold-formed steel framing construction details. Each detail including accompanying text must be thoroughly evaluated and approved by a qualified architect or engineer. | Find over 500 CAD details at cad.clarkdietrich.com | © Copyright 2015 ClarkDietrich Building Systems

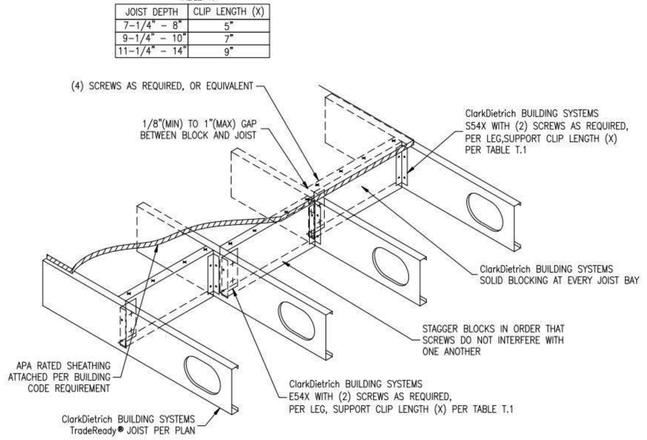

TABLE T.1

JOIST DEPTH	CLIP LENGTH (X)
7-1/4" – 8"	5"
9-1/4" – 10"	7"
11-1/4" – 14"	9"

F2104 JOIST BRIDGING – SOLID BLOCKING
ClarkDietrich TradeReady Floor Joist System

The CAD detail library is intended to provide general framing details only and does not replace the judgments and designs of a qualified architect and/or engineer. The details are provided as a starting tool to assist the user in creating and detailing cold-formed steel framing construction details. Each detail including accompanying text must be thoroughly evaluated and approved by a qualified architect or engineer. | Find over 500 CAD details at cad.clarkdietrich.com | © Copyright 2015 ClarkDietrich Building Systems

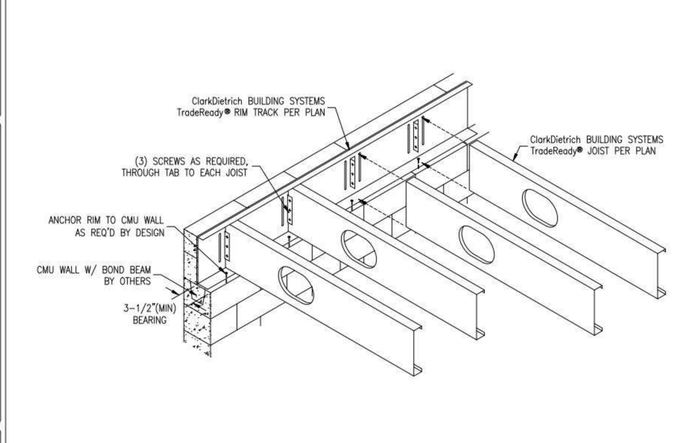

F1112 JOIST RIM – CMU WALL – STANDARD
ClarkDietrich TradeReady Floor Joist System

The CAD detail library is intended to provide general framing details only and does not replace the judgments and designs of a qualified architect and/or engineer. The details are provided as a starting tool to assist the user in creating and detailing cold-formed steel framing construction details. Each detail including accompanying text must be thoroughly evaluated and approved by a qualified architect or engineer. | Find over 500 CAD details at cad.clarkdietrich.com | © Copyright 2015 ClarkDietrich Building Systems

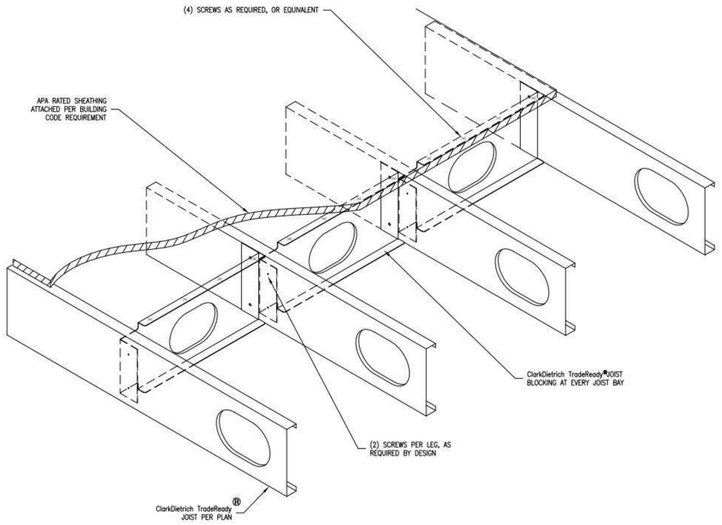

FLOOR JOIST BLOCKING
ClarkDietrich TradeReady FLOOR JOIST SYSTEM

NOTE:
LOAD BEARING WALL FRAMING ABOVE AND BELOW MUST ALIGN WITH JOISTS, OTHERWISE E.O.R. REVIEW REQUIRED TO VERIFY WALL LOAD IS TRANSFERRED AT JOIST LOCATIONS.

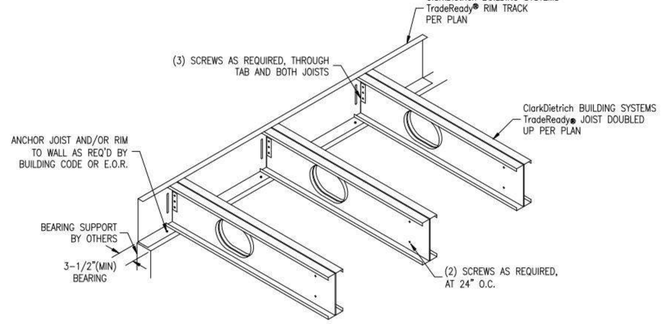

F1103 JOIST RIM – DOUBLE JOISTS
ClarkDietrich TradeReady Floor Joist System

The CAD detail library is intended to provide general framing details only and does not replace the judgments and designs of a qualified architect and/or engineer. The details are provided as a starting tool to assist the user in creating and detailing cold-formed steel framing construction details. Each detail including accompanying text must be thoroughly evaluated and approved by a qualified architect or engineer. | Find over 500 CAD details at cad.clarkdietrich.com | © Copyright 2015 ClarkDietrich Building Systems

GIST RD. SFR 1

APN544-23-041; PROPOSED ADDRESS: 20555 GIST RD, LOS GATOS, CA 95033

REVISION HISTORY

S3DA Structural & Architectural Design
4196 Adams Ave. San Diego CA 92116
(619) 404-2220

Mr. Nader Moavenian
nader.m@s3da-design.com

REGISTERED PROFESSIONAL ENGINEER BARRETT CROCKETT C 057196 Exp. 12-31-2021 CIVIL STATE OF CALIFORNIA

2-11-2020

1. The contractor must check all dimensions on-site before commencing work

2. These drawings are to be read in conjunction with all relevant designer, engineer or specialist drawings and specifications

3. The contractor is responsible for providing all necessary temporary support to the building and any adjacent structures

COUNTY APPROVAL STAMP

REVISION DATE
02/11/2020

DRAWING NAME
117 TradeReady CFS Joist System Details

Drawing Scale

S-22

BASE ATTACHMENT DETAIL

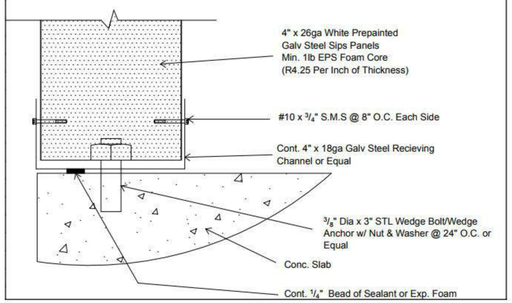

Beam To SIP Wall Detail

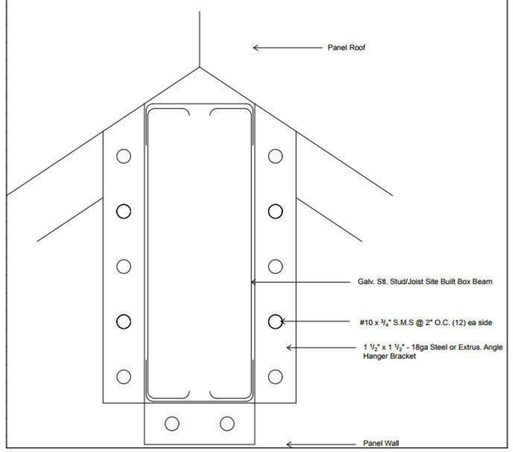

BASE ATTACHMENT DETAIL

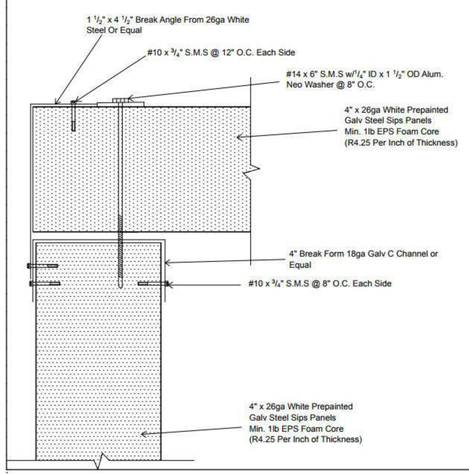

FASCIA DETAIL

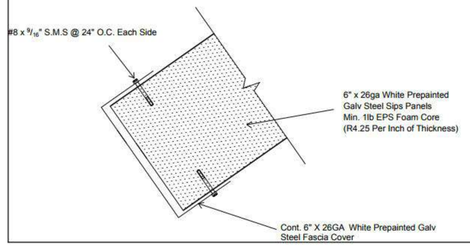

GARAGE HEADER DETAIL

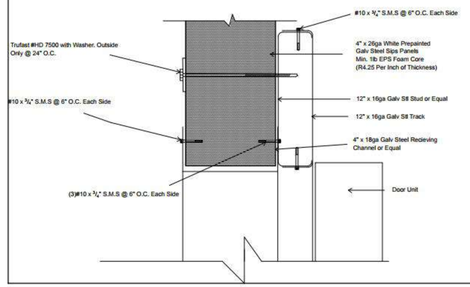

PANEL ROOF FINISH ASPHALT SHINGLES

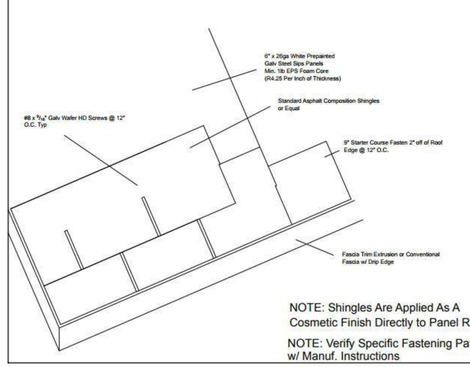

NOTE: Shingles Are Applied As A Cosmetic Finish Directly to Panel Roof

NOTE: Verify Specific Fastening Pattern w/ Manuf. Instructions

TYPICAL DOOR HEADER/JAMB DETAIL

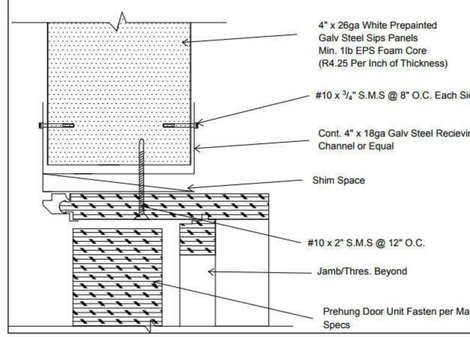

ROOF HIP BEAM

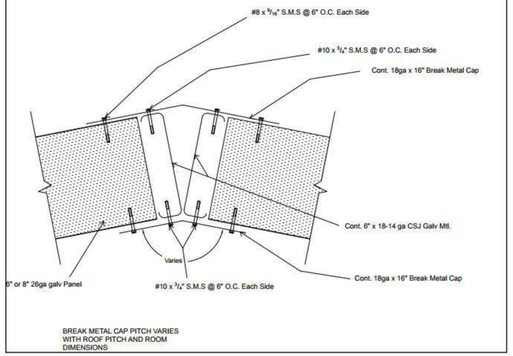

BREAK METAL CAP PITCH VARIES WITH ROOF PITCH AND ROOM DIMENSIONS

Roof Panel to Ridge Beam Attachment Detail

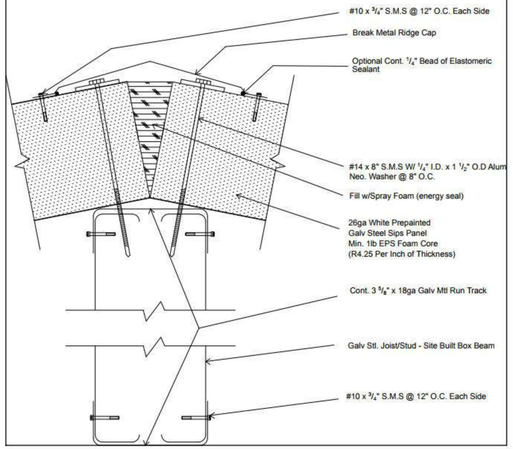

PermaTherm
Insulation Innovation

269 Industrial Park Rd.
Monticello, GA 31064
[p] (706) 468-7500
[f] (706) 468-7510
[e] info@permatherm.net

EPS Insulated Panels

Maximum Spans for Uniform Loads

(Units in Feet for 26-Gauge Steel Panel Skins)

Core Thickness	Total Uniform Load (lb/sq ft)						
	5	10	20	30	40	50	60
2 inch	18	13	9	7	6	5	3
3 inch	22	16	10	9	6	5	4
4 inch	25	18	13	10	8	7	6
5 inch	30	22	15	12	9	8	7
6 inch	32	23	16	13	10	9	8
8 inch	36	25	19	15	12	11	10
10 inch	41	29	20	17	14	12	11

**Uniform Load Spans based on the following: face wrinkling with a safety factor of 2; deflection of L/240 of span; or core shear with a safety factor of 5. Uniform Load Spans are rounded to the lower footage.*

** All values are calculated using core material of Type 1 (1 lb. Density) EPS Foam. Greater values can be reached with higher density foam which is available.*

Other Guidelines

PermaTherm Architectural Insulating Panels are designed to carry specified total loads, with maximum computed buckling stress not to exceed the maximum allowable buckling stress of the facings.

The inside face of all panels must be cut at girt attachments to avoid compression bucking of the exterior skin.

Wherever interior panel skins are extended to the outside (warm side) surface, a thermal break must be cut to avoid thermal conductivity.

Block panel packages should be stored above ground to keep out of water provide drainage.

Contents and logo are property of PermaTherm, Inc.
All rights reserved. Copyright 20106

TYPICAL WINDOW-HEADER/JAMB/SILL DETAIL

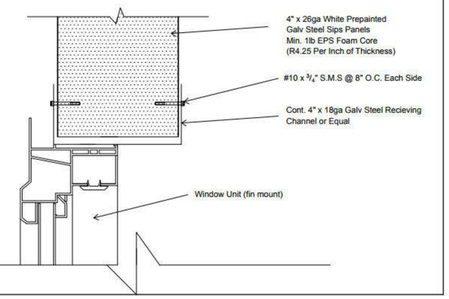

Panel Roof Finish - Metal Roof

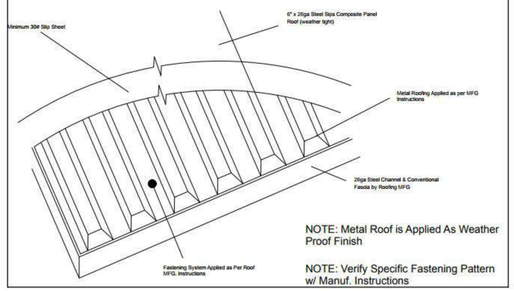

NOTE: Metal Roof is Applied As Weather Proof Finish

NOTE: Verify Specific Fastening Pattern w/ Manuf. Instructions

SIP Panel interior furring, electric, finish, connections

GIST RD. SFR 1

APN544-23-041; PROPOSED ADDRESS: 20555 GIST RD, LOS GATOS, CA 95033

REVISION HISTORY

S3DA Structural & Architectural Design
4196 Adams Ave. San Diego CA 92116
(619) 404-0220

Mr. Nader Moavenian
nader.m@s3da-design.com

REGISTERED PROFESSIONAL ENGINEER
BARRETT CROOK
C 057198
Exp. 12-31-2021
CIVIL
STATE OF CALIFORNIA

2-11-2020

1. The contractor must check all dimensions on-site before commencing work

2. These drawings are to be read in conjunction with all relevant designer, engineer or specialist drawings and specifications

3. The contractor is responsible for providing all necessary temporary support to the building and any adjacent structures

COUNTY APPROVAL STAMP

REVISION DATE
02/11/2020

DRAWING NAME
118 Structural Insulated Panel (SIP) connection details

S-23

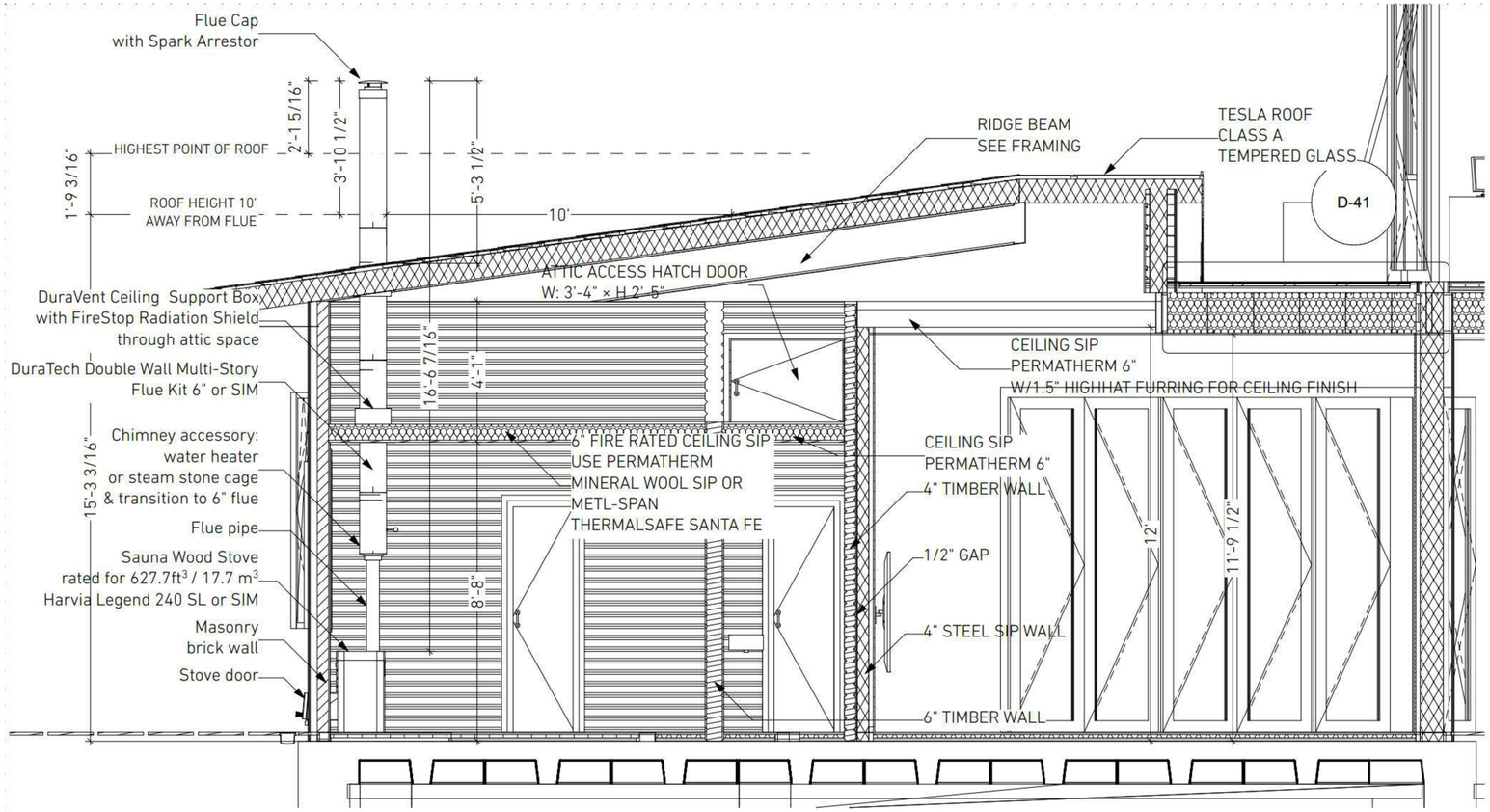

S-103 Gym & Sauna Section 1/2" = 1'-0"

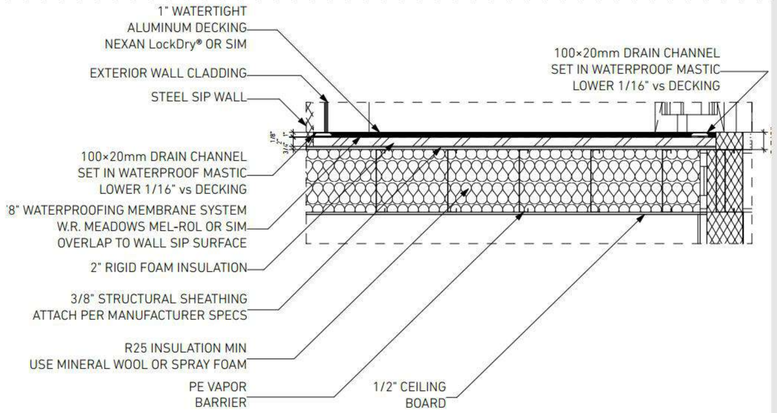

D-41 WARM DECK DETAIL 3/4" = 1'-0"

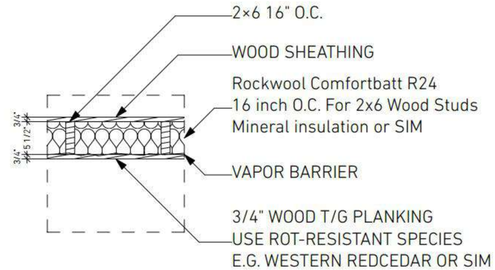

D-40 SAUNA CEILING INSULATION (JOISTED VARIANT) 1" = 1'-0"

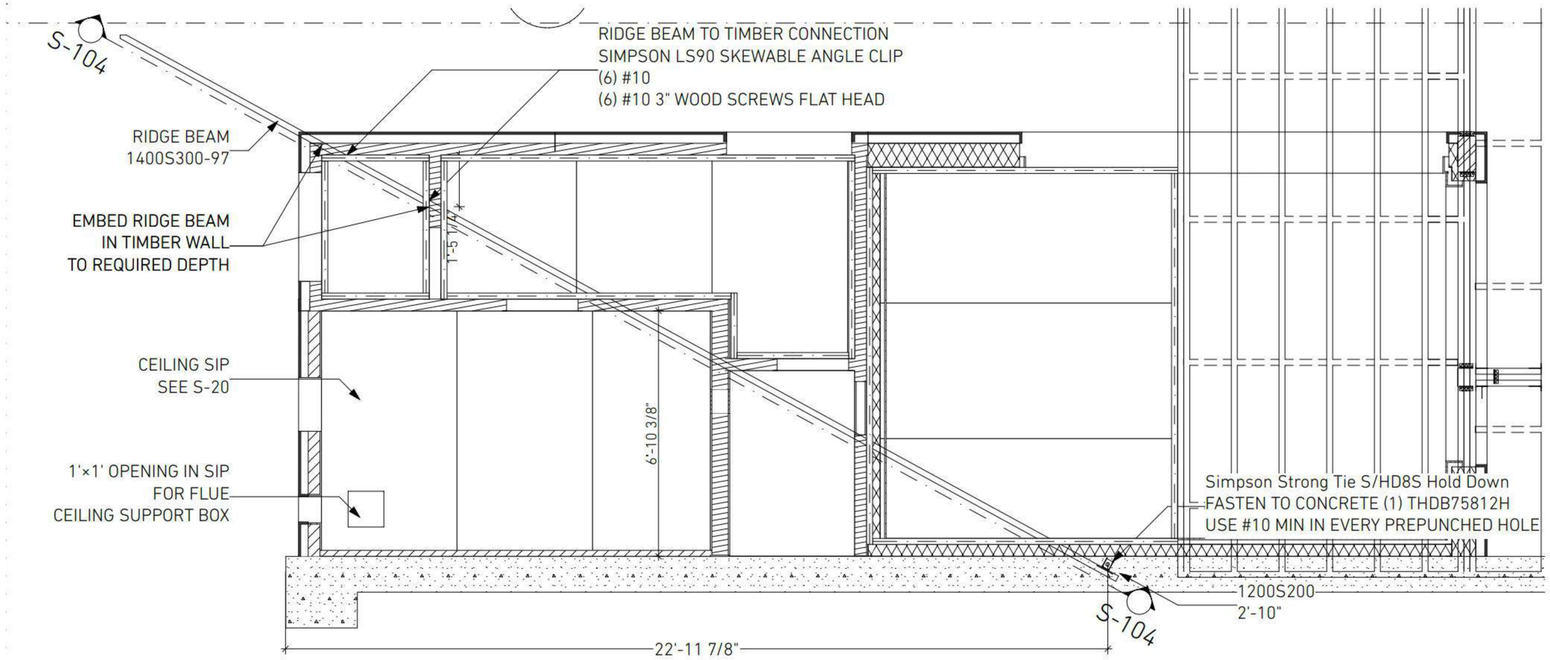

1. Gym & Sauna Framing 1:50

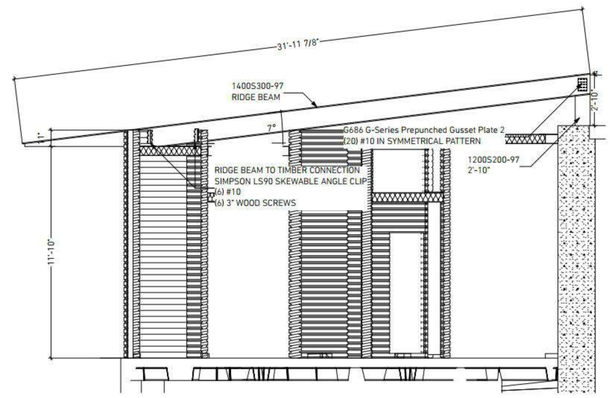

S-104 Roof Framing Gym & Sauna 1:50

GIST RD. SFR 1

APN544-23-041; PROPOSED ADDRESS: 20555

GIST RD, LOS GATOS, CA 95033

REVISION HISTORY

S3DA Structural & Architectural Design
4196 Adams Ave. San Diego CA 92116
(619) 404-0220

Mr. Nader Moavenian
nader.m@s3da-design.com

REGISTERED PROFESSIONAL ENGINEER
BARRETT CROOK
C 057196
Exp. 12.31.2021
CIVIL
STATE OF CALIFORNIA

2-11-2020

1. The contractor must check all dimensions on-site before commencing work

2. These drawings are to be read in conjunction with all relevant designer, engineer or specialist drawings and specifications

3. The contractor is responsible for providing all necessary temporary support to the building and any adjacent structures

COUNTY APPROVAL STAMP

REVISION DATE
02/11/2020

DRAWING NAME
119 Gym & Sauna Structural Plans

Drawing Scale

S-24

EN

4. INSTRUCTIONS FOR INSTALLATION

4.1. Before Installation

⚠ **Before installing the stove make sure that all safety distance requirements are fulfilled. There shall be no electrical devices, wires or inflammable materials within the established safety distances around the stove. Also observe the protective distances of the chimney!**

If the safety distance requirements are not fulfilled, you should use additional protection (⇨4.1.3., 4.1.4.).

The local fire authorities in charge of approving the installations can provide more detailed information about fire safety regulations.

INSTALLATION ON CONCRETE FLOOR APPLIES

4.1.1. Protecting the Floor (figure 7)

A. Concrete floor without tiles. The stove can be installed on a concrete floor without any specific safety measures, if the concrete is at least 60 mm thick. Make sure that there are no wires or water pipes in the concrete cast below the stove.

B. Floor made of inflammable material. Protect the floor with at least 60 mm thick slab of concrete. The slab must extend to a distance of 300 mm from the stove body on the sides and behind (unless the stove is next to a wall) and at least 400 mm in front of the stove. The slab should be supported slightly above the floor surface to keep the floor material dry.

C. Tile floor. The floor glues and plasters and waterproof materials used below the tiles are not resistant to the heat radiation of the stove. Protect the floor with the WL100 protective bedding (⇨4.3.) or similar heat radiation protection.

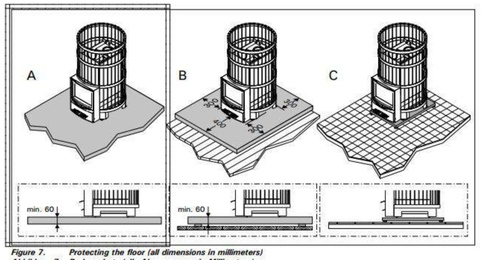

Figure 7. Protecting the floor (all dimensions in millimeters)
Abbildung 7. Bodenschutz (alle Abmessungen in Millimetern)

EN

4.1.2. Safety Distances (figure 8)

⚠ **Incorrect stone placement can cause the surrounding structures to heat up to dangerous temperatures even outside the safety distances. The defined safety distances are valid only when the stones have been placed as described in section 2.4.**

A. Ceiling. The minimum safety distance between the stove and the ceiling is 1000 mm.

B. Masonry walls. Leave 50 mm between the stove and walls, provided that the air can circulate in front and to one side of the stove. If the stove is installed in a recessed wall, leave 210 mm between the stove and side walls and 250 mm behind the stove.

C. Walls and benches made of combustible materials. The minimum safety distances from inflammable materials: 210 mm on either side of the stove, 250 mm behind and 1000 mm in the front. The heat radiating through the door requires a safety distance of 400 mm calculated at a 45° angle.

D. Space required for use and maintenance. The stove user needs at least one square metre of space in front of the stove.

INSTALLATION NEXT TO MASONRY WALLS

INSTALLATION NEXT TO MASONRY WALLS

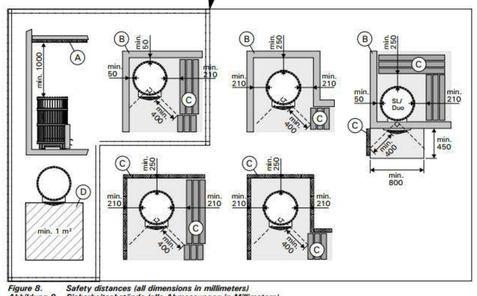

Figure 8. Safety distances (all dimensions in millimeters)
Abbildung 8. Sicherheitsabstände (alle Abmessungen in Millimetern)

4.1.3. Protective Covers

The specified safety distances from inflammable materials can be reduced to half with a single protective cover and to one-fourth with a double protective cover.

- A single protective cover (figure 9: 1x) can be made of non-flammable fibre-reinforced concrete plate (mineral plate) with a minimum thickness of 7 mm or of a metal sheet with a

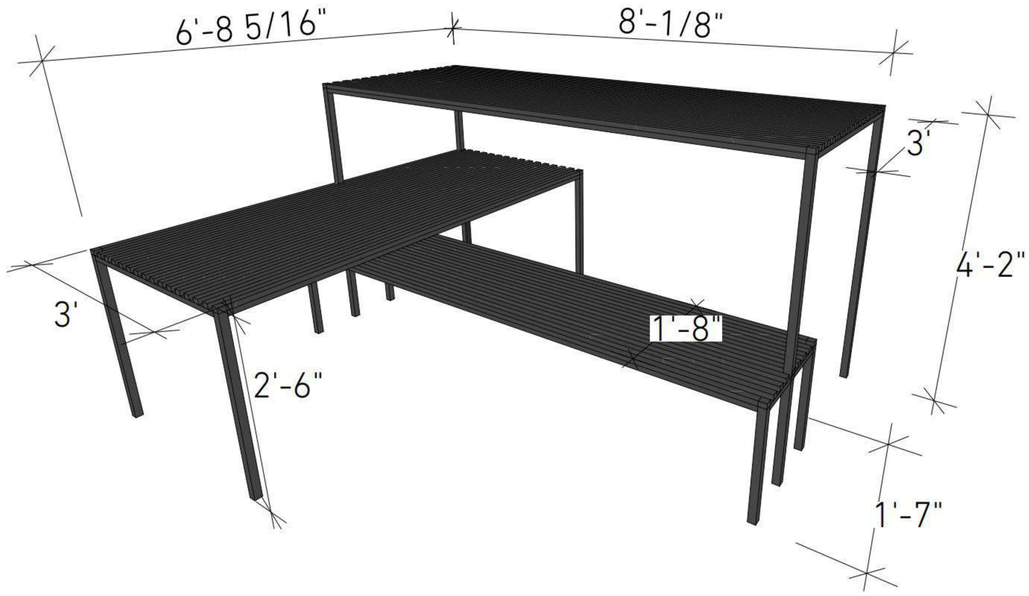

3D-53 Sauna Benches Dimensions 1:100

EN

4.3. Accessories (figure 14)

A. Harvia steel chimney WHP1500. ⇨4.2.3.

B. Water heater VL22I (pipe model). Installed on the top of the upper connection opening. When a protective sheath or other protection is used that is not large enough to protect the inflammable materials around the stove from the heat radiation of the pipe between the water heater and smoke flue, you must install radiation cover around the pipe.

C. Radiation cover WZ020130. Installed around the smoke pipe. The safety distance from inflammable materials of an unprotected smok pipe is 1,000 mm. When the radiation cover is used, the safety distance is 500 mm.

D. Connecting pipe WZ115200. Lifts the water container to the right level (Legend 240 and 300 models).

E. Angle smoke pipe. Different models.

F. Masonry connector WZ011115. Connected to the flue opening, does not require other seals. The inner side already has a seal.

G. Lead-through flange for smoke pipe WZ020115. Covers the edges of the flue opening and the sealing in the wall. Made of stainless steel. Consists of two parts to make useable with differently inclined smoke pipes.

H. Legend protective bedding WL100. ⇨4.1.4.

I. Legend protective sheath WL200. ⇨4.1.4.

J. Legend smoke pipe cover WL300. ⇨4.1.4.

PROPOSED CHIMNEY ACCESS

PROPOSED CHIMNEY ACCESS

PROPOSED CHIMNEY ACCESSORIES SUBJECT TO AVAILABILITY

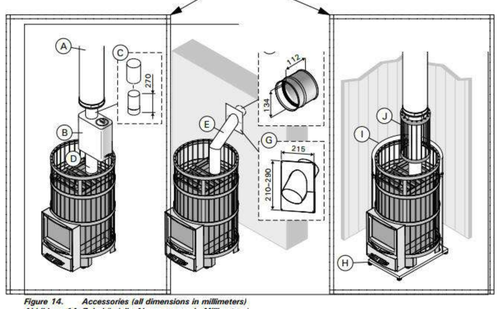

Figure 14. Accessories (all dimensions in millimeters)
Abbildung 14. Zubehör (alle Abmessungen in Millimetern)

CHIMNEY WATER BOILER (B) AND STEAM STONE CAGE (J) 1" = 1'-0"

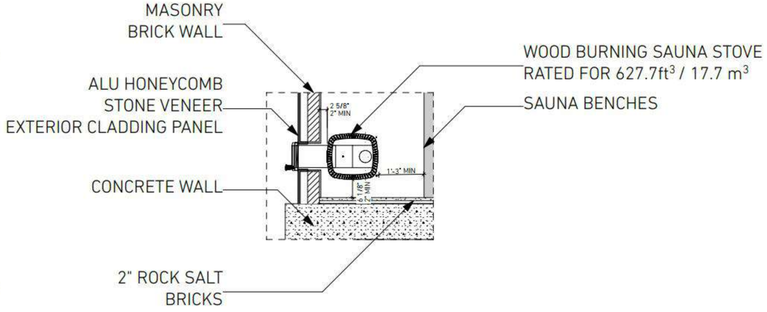

D-52 SAUNA STOVE SIDE CLEARANCES 1/2" = 1'-0"

SAUNA NOTES

1. USE NATURALLY ROT-RESISTANT WOOD SPECIES FOR CONSTRUCTION OF SAUNA WALLS, DOORS AND CEILING COVERINGS. SUITABLE LOCAL TIMBER SPECIES ARE: CEDAR (NORTHERN WHITE CEDAR, WESTERN REDCEDAR, YELLOW CEDAR, SPANISH CEDAR), REDWOOD, BLACK WALNUT, WHITE OAK, AND TEAK. HEARTWOOD IS BEST
2. TREAT TIMBER SURFACES WITH CLEAR PARRAFIN OIL PRIOR TO CONSTRUCTION TO INCREASE TIMBER'S USEFUL LIFE IN WET CONDITIONS: WARM UP THE TIMBER TO OPEN GRAIN OF THE WOOD SO THE OIL WILL ABSORB BETTER. USE A SPONGE OR A BRUSH TO EVENLY SPREAD THE OIL. MAKE SURE TO USE OIL ON ALL SIDES OF TIMBER AND BOARDS. USE THE OIL ON ALL THE WOODEN SURFACES: BENCHES, BACK- AND HEADRESTS. LET THE OIL ABSORB FOR 1 TO 2 HOURS. USE A LINT-FREE CLOTH TO WIPE OFF THE EXCESS OIL. MAKE SURE ALL THE OIL IS ABSORBED BEFORE HEATING THE SAUNA
3. USE MINERAL WOOL THERMAL INSULATION.
4. USE FIRE-RETARDANT VAPOR BARRIER WHERE SPECIFIED (CLASS A).
5. USE UL LISTED FLUE ASSEMBLIES. FOLLOW MANUFACTURER'S INSTALLATION AND SAFETY INSTRUCTIONS.

WOOD BURNING SAUNA STOVE HARVIA LEGEND 240SL OR SIM RATED FOR 627.7ft³ / 17.7 m³

ROCK SALT BRICKS 2" THICKNESS

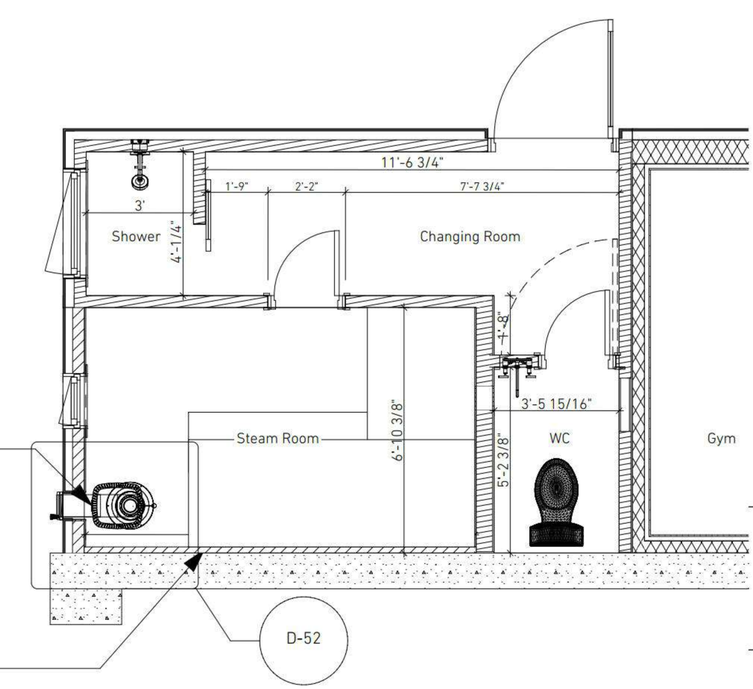

1. SAUNA PLAN 1/2" = 1'-0"

S3DA Structural & Architectural Design
4196 Adams Ave. San Diego CA 92116
(619) 404-0220

Mr. Nader Moavenian
nader.m@s3da-design.com

REGISTERED PROFESSIONAL ENGINEER
Barrett C Groom
C 057196
Exp. 12-31-2021
CIVIL
STATE OF CALIFORNIA

2-11-2020

1. The contractor must check all dimensions on-site before commencing work

2. These drawings are to be read in conjunction with all relevant designer, engineer or specialist drawings and specifications

3. The contractor is responsible for providing all necessary temporary support to the building and any adjacent structures

COUNTY APPROVAL STAMP

REVISION HISTORY

REVISION DATE
02/11/2020

DRAWING NAME
120 Sauna details: stove, benches

Drawing Scale

S-25

GIST RD. SFR 1

APN544-23-041; PROPOSED ADDRESS: 20555 GIST RD, LOS GATOS, CA 95033

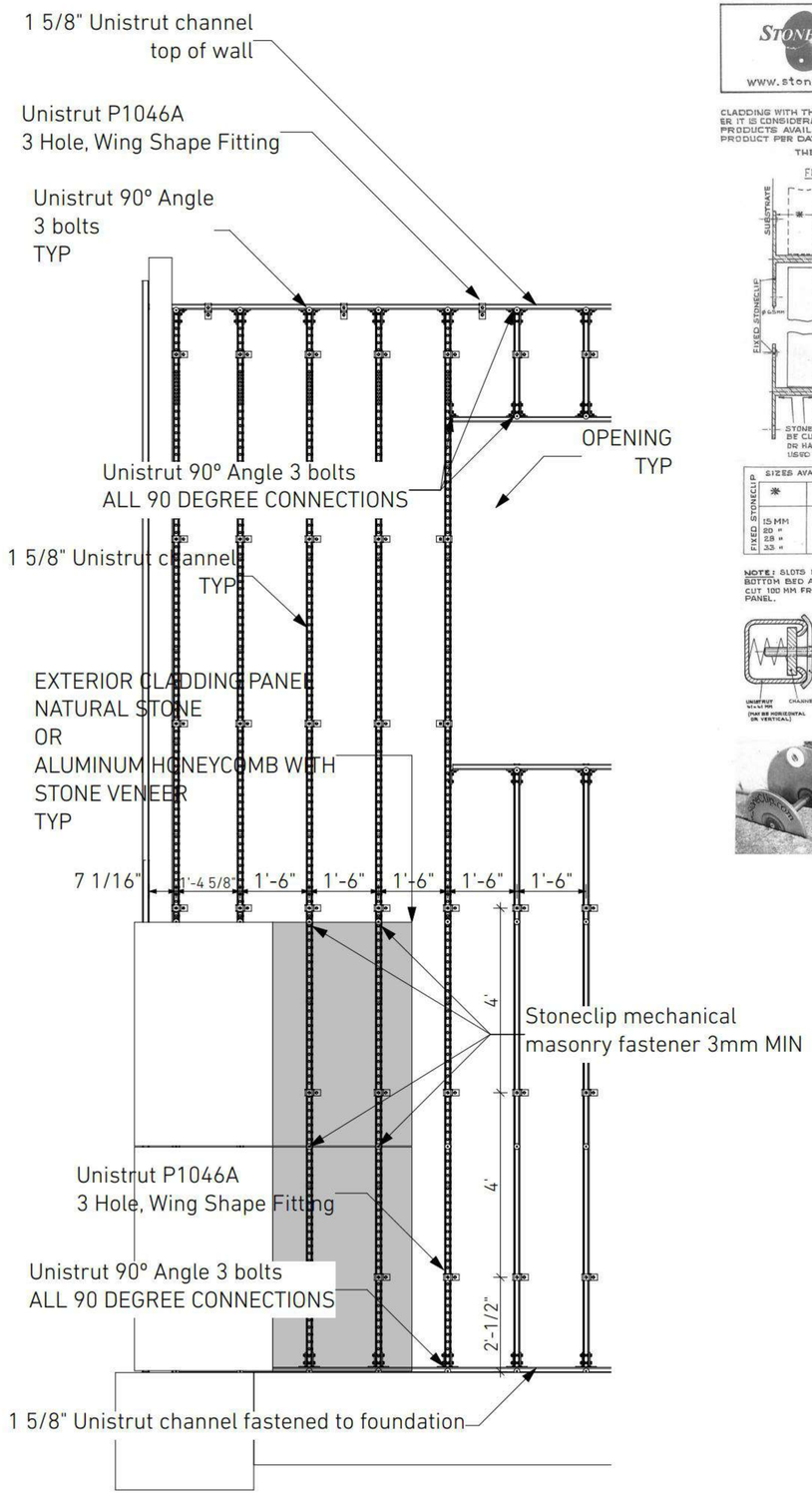

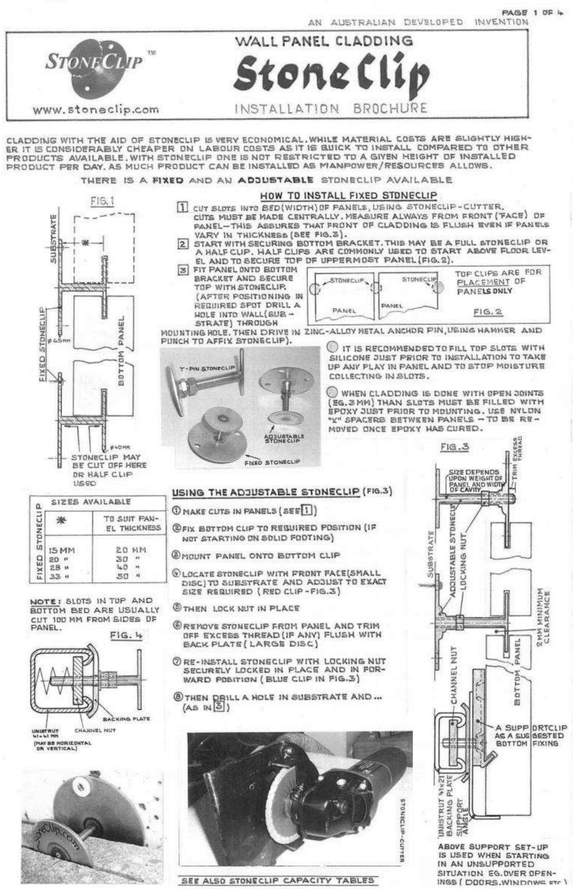

PAGE 1 OF 4

AN AUSTRALIAN DEVELOPED INVENTION

STONECLIP™

WALL PANEL CLADDING

StoneClip

www.stoneclip.com

INSTALLATION BROCHURE

CLADDING WITH THE AID OF STONECLIP IS VERY ECONOMICAL. WHILE MATERIAL COSTS ARE SLIGHTLY HIGHER IT IS CONSIDERABLY CHEAPER ON LABOUR COSTS AS IT IS QUICK TO INSTALL COMPARED TO OTHER PRODUCTS AVAILABLE. WITH STONECLIP ONE IS NOT RESTRICTED TO A GIVEN HEIGHT OF INSTALLED PRODUCT PER DAY. AS MUCH PRODUCT CAN BE INSTALLED AS MANPOWER/RESOURCES ALLOWS.

THERE IS A **FIXED** AND AN **ADJUSTABLE** STONECLIP AVAILABLE

FIG.1

SUBSTRATE

FIXED STONECLIP

BOTTOM PANEL

STONECLIP MAY BE CUT OFF HERE OR HALF CLIP USED

HOW TO INSTALL FIXED STONECLIP

1. CUT SLOTS INTO BED(WIDTH) OF PANELS, USING STONECLIP-CUTTER. CUTS MUST BE MADE CENTRALLY. MEASURE ALWAYS FROM FRONT (FACE) OF PANEL—THIS ASSURES THAT FRONT OF CLADDING IS FLUSH EVEN IF PANELS VARY IN THICKNESS (SEE FIG.3).
2. START WITH SECURING BOTTOM BRACKET. THIS MAY BE A FULL STONECLIP OR A HALF CLIP. HALF CLIPS ARE COMMONLY USED TO START ABOVE FLOOR LEVEL AND TO SECURE TOP OF UPPERMOST PANEL (FIG.2).
3. FIT PANEL ONTO BOTTOM BRACKET AND SECURE TOP WITH STONECLIP. (AFTER POSITIONING IN REQUIRED SPOT DRILL A HOLE INTO WALL(SUBSTRATE) THROUGH MOUNTING HOLE, THEN DRIVE IN ZINC-ALLOY METAL ANCHOR PIN, USING HAMMER AND PUNCH TO AFFIX STONECLIP).

STONECLIP / PANEL / STONECLIP / PANEL

TOP CLIPS ARE FOR PLACEMENT OF PANELS ONLY

FIG.2

Y-PIN STONECLIP

ADJUSTABLE STONE CLIP

FIXED STONECLIP

- IT IS RECOMMENDED TO FILL TOP SLOTS WITH SILICONE JUST PRIOR TO INSTALLATION TO TAKE UP ANY PLAY IN PANEL AND TO STOP MOISTURE COLLECTING IN SLOTS.
- WHEN CLADDING IS DONE WITH OPEN JOINTS (EG. 3 MM) THAN SLOTS MUST BE FILLED WITH EPOXY JUST PRIOR TO MOUNTING. USE NYLON "V" SPACERS BETWEEN PANELS — TO BE REMOVED ONCE EPOXY HAS CURED.

SIZES AVAILABLE FIXED STONECLIP	TO SUIT PANEL THICKNESS
15 MM	20 MM
20 "	30 "
28 "	40 "
35 "	50 "

NOTE: SLOTS IN TOP AND BOTTOM BED ARE USUALLY CUT 100 MM FROM SIDES OF PANEL.

FIG. 4

UNISTRUT (MIN 41 MM) (MAY BE HORIZONTAL OR VERTICAL)

CHANNEL NUT

BACKING PLATE

USING THE ADJUSTABLE STONECLIP (FIG.3)

1. MAKE CUTS IN PANELS (SEE 1)
2. FIX BOTTOM CLIP TO REQUIRED POSITION (IF NOT STARTING ON SOLID FOOTING)
3. MOUNT PANEL ONTO BOTTOM CLIP
4. LOCATE STONECLIP WITH FRONT FACE (SMALL DISC) TO SUBSTRATE AND ADJUST TO EXACT SIZE REQUIRED (RED CLIP - FIG.3)
5. THEN LOCK NUT IN PLACE
6. REMOVE STONECLIP FROM PANEL AND TRIM OFF EXCESS THREAD (IF ANY) FLUSH WITH BACK PLATE (LARGE DISC)
7. RE-INSTALL STONECLIP WITH LOCKING NUT SECURELY LOCKED IN PLACE AND IN FORWARD POSITION (BLUE CLIP IN FIG.3)
8. THEN DRILL A HOLE IN SUBSTRATE AND ... (AS IN 3)

FIG.3

SIZE DEPENDS UPON WEIGHT OF PANEL AND WIDTH OF CAVITY

TRIM PACKS (SHIMS)

SUBSTRATE

ADJUSTABLE STONECLIP

LOCKING NUT

5MM MINIMUM CLEARANCE

CHANNEL NUT

BOTTOM PANEL

A SUPPORTCLIP AS A SUGGESTED BOTTOM FIXING

UNISTRUT M41x21 BACKING PLATE SQUARE ANGLE

ABOVE SUPPORT SET-UP IS USED WHEN STARTING IN AN UNSUPPORTED SITUATION EG. OVER OPENINGS (DOORS, WINDOWS ETC.)

STONECLIP-CUTTER

SEE ALSO STONECLIP CAPACITY TABLES

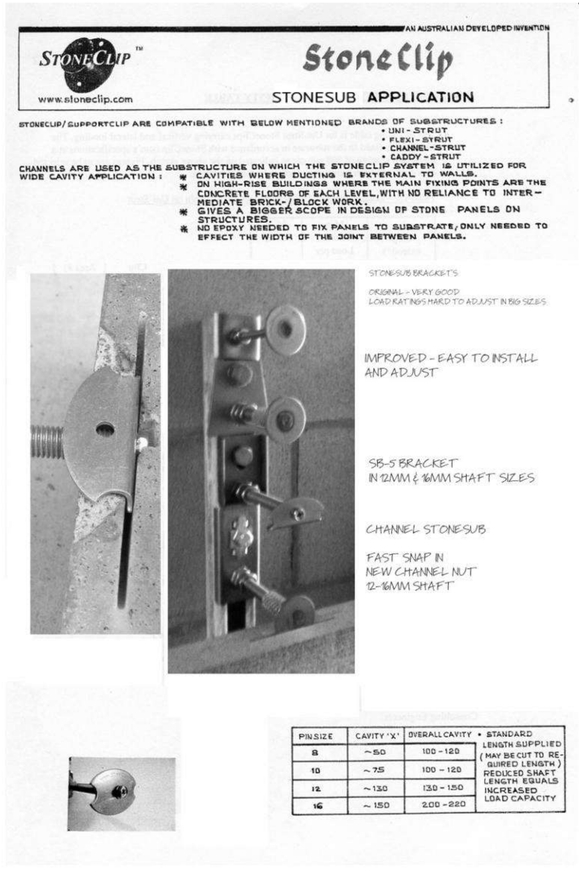

AN AUSTRALIAN DEVELOPED INVENTION

STONECLIP™

www.stoneclip.com

StoneClip

STONESUB **APPLICATION**

STONECLIP/SUPPORTCLIP ARE COMPATIBLE WITH BELOW MENTIONED BRANDS OF SUBSTRUCTURES :

- UNI-STRUT
- FLEXI-STRUT
- CHANNEL-STRUT
- CADDY-STRUT

CHANNELS ARE USED AS THE SUBSTRUCTURE ON WHICH THE STONECLIP SYSTEM IS UTILIZED FOR WIDE CAVITY APPLICATION :

- CAVITIES WHERE DUCTING IS EXTERNAL TO WALLS.
- ON HIGH-RISE BUILDINGS WHERE THE MAIN FIXING POINTS ARE THE CONCRETE FLOORS OF EACH LEVEL, WITH NO RELIANCE TO INTERMEDIATE BRICK-/BLOCK WORK.
- GIVES A BIGGER SCOPE IN DESIGN OF STONE PANELS ON STRUCTURES.
- NO EPOXY NEEDED TO FIX PANELS TO SUBSTRATE, ONLY NEEDED TO EFFECT THE WIDTH OF THE JOINT BETWEEN PANELS.

STONESUB BRACKET'S

ORIGINAL - VERY GOOD LOAD RATINGS HARD TO ADJUST IN BIG SIZES

IMPROVED - EASY TO INSTALL AND ADJUST

SB-S BRACKET IN 12MM & 16MM SHAFT SIZES

CHANNEL STONESUB

FAST SNAP IN NEW CHANNEL NUT 12-16MM SHAFT

PIN SIZE	CAVITY 'X'	OVERALL CAVITY	• STANDARD LENGTH SUPPLIED (MAY BE CUT TO REQUIRED LENGTH.) • REDUCED SHAFT LENGTH EQUALS INCREASED LOAD CAPACITY
8	~ 50	100 - 120	
10	~ 75	100 - 120	
12	~ 130	130 - 150	
16	~ 150	200 - 220	

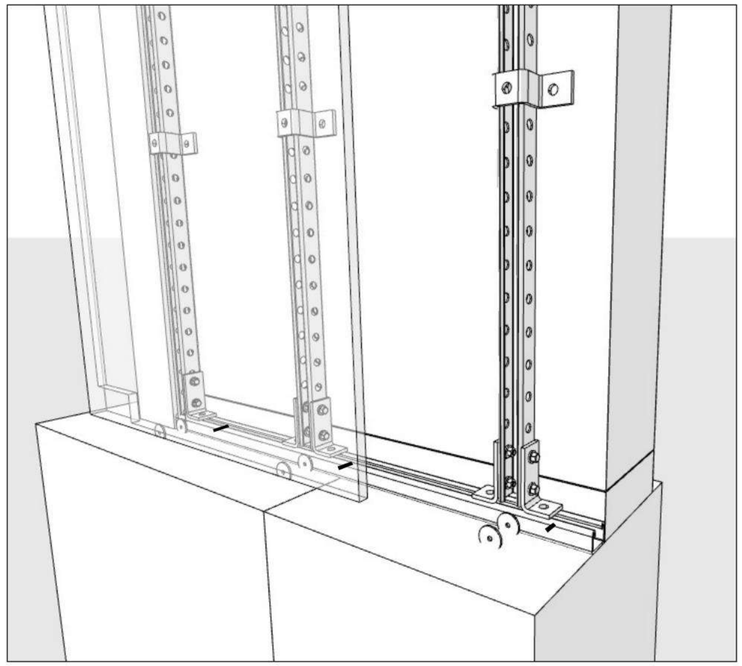

Ventilated facade fastening details with Stoneclip

1:100

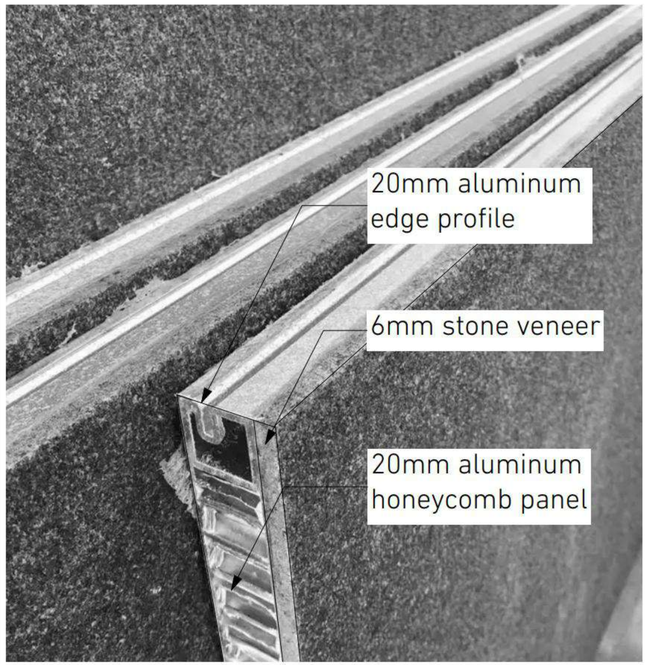

Honeycomb Granite Composite Panel

REVISION HISTORY

GIST RD. SFR 1

APN544-23-041; PROPOSED ADDRESS: 20555 GIST RD, LOS GATOS, CA 95033

S3DA Structural & Architectural Design
4196 Adams Ave. San Diego CA 92116
(619) 404-0220

Mr. Nader Moavenian
nader.m@s3da-design.com

REGISTERED PROFESSIONAL ENGINEER
BARRETT CROOK
C 057196
Exp. 12.31.2021
CIVIL
STATE OF CALIFORNIA

2-11-2020

1. The contractor must check all dimensions on-site before commencing work

2. These drawings are to be read in conjunction with all relevant designer, engineer or specialist drawings and specifications

3. The contractor is responsible for providing all necessary temporary support to the building and any adjacent structures

COUNTY APPROVAL STAMP

REVISION DATE
02/11/2020

DRAWING NAME
121 Ventilated facade, exterior cladding

Drawing Scale

S-26

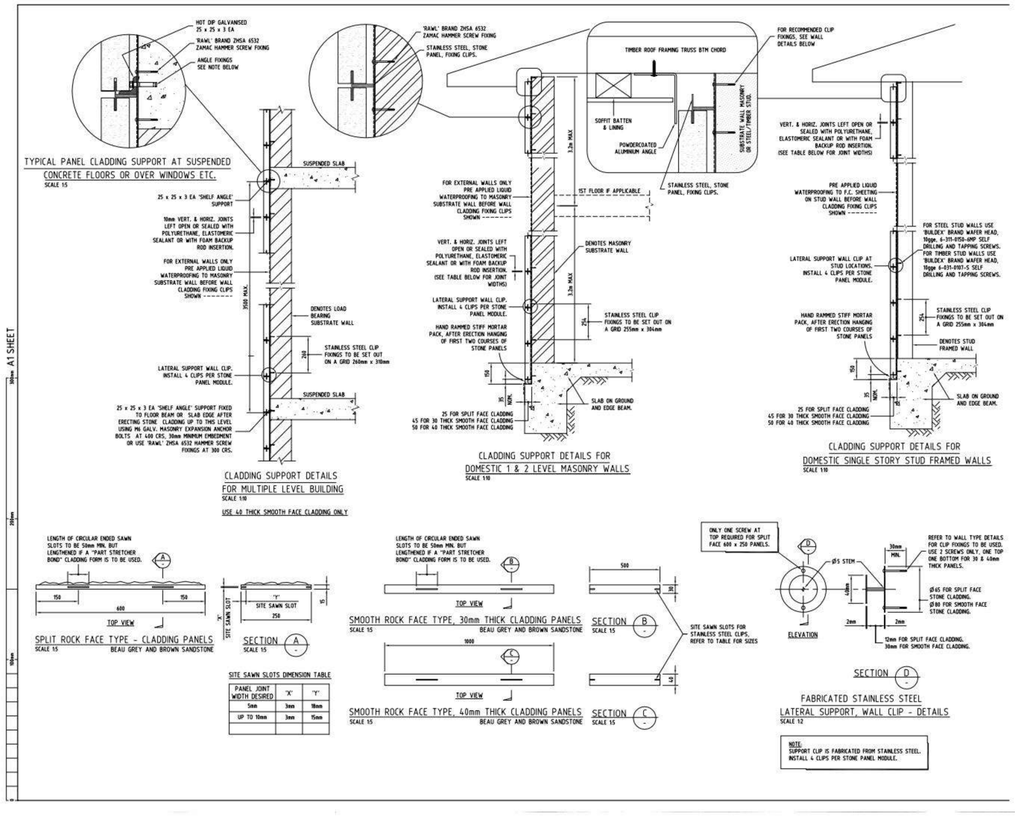

COPYRIGHT © ALL RIGHTS RESERVED
Copying or reproducing the whole or any part of this document in any form without the written permission of GANTEC McWILLIAM Consulting Engineers (Australia) Pty Ltd infringement of copyright.
DISCLAIMER
GANTEC McWILLIAM Consulting Engineers accepts no responsibility for the use of this document for any purpose other than that for which it was prepared. Prior to using it, information contained in Drawings in electronic form should be checked for accuracy against the equivalent hard copy issued by GANTEC McWILLIAM.
WARNING
Before commencing construction verify all dimensions against Architect's, other Consultant's and Sub-Contractor's drawings. Dimensions are not to be scaled or read electronically from this drawing. Figured dimensions are to be taken in preference to those obtained from the Architect's or other Consultant's drawings.

NOTE:
THE STAINLESS STEEL, DUAL CIRCULAR, STONE CLADDING FIXING CLIPS, DETAILED ON THESE DRAWINGS AND IN THE REPORT, HAS BEEN REGISTERED UNDER THE TRADEMARK OF "STONECLIP". THE PRODUCT AND ITS TRADEMARK NAME, MAY NOT BE COPIED, MARKETED OR REPLICATED, WITHOUT THE EXPRESS PERMISSION IN WRITING OF STONEHOUSE CREATIONS PTY. LTD. (PATENT PENDING)

ISSUE	AMENDMENT	DATE	DETAILS
B	SECOND ISSUE	11.08.05	AS
A	FIRST ISSUE	24.07.05	AS

A.S.	J.O.G.
DRAWN	DESIGNED
J. GIBSON	D.C.S.
PROJECT ENGINEER	DESIGN VERIFICATION
D. SHEEHAN	JULY 05
PROJECT DIRECTOR	DATE (Copyright)

GANTEC McWILLIAM CONSULTING ENGINEERS
A.B.N. 79 006 363 965
61 Fortescue Street
Spring Hill Qld 4000
PO Box 99 Spring Hill Qld 4004
Telephone (07) 3007 8181
Facsimile (07) 3007 8182
E-Mail: brisbane@gmcw.com.au

PROJECT
STONEHOUSE CREATIONS PTY LTD.

CLIENT

ARCHITECT

DRAWING TITLE
BEAU GREY & BEAU BROWN SAWN SANDSTONE WALL CLADDING SYSTEM, AND FIXING ARRANGEMENTS

SCALES	CLIENT PROJECT No.
AS NOTED	
DRAWING No. 050238	ISSUE
APPENDIX 'A'	B

A1 SHEET
594mm
594mm

GIST RD. SPR I

TORY

APN544-23-041; PROPOSED ADDRESS: 20555 GIST RD, LOS GATOS, CA 95033

S3DA Structural & Architectural Design
4196 Adams Ave. San Diego CA 92116
(619) 404-0220

Mr. Nader Moavenian
nader.m@s3da-design.com

REGISTERED PROFESSIONAL ENGINEER
BARRETT CROOM
C 057196
Exp. 12-31-2021
CIVIL
STATE OF CALIFORNIA

2-11-2020

1. The contractor must check all dimensions on-site before commencing work

2. These drawings are to be read in conjunction with all relevant designer, engineer or specialist drawings and specifications

3. The contractor is responsible for providing all necessary temporary support to the building and any adjacent structures

COUNTY APPROVAL STAMP

REVISION DATE
02/11/2020

DRAWING NAME
122 Ventilated facade with Stoneclip

Drawing Scale

S-27

PROJECT INFORMATION

APN	544-23-042
ZONING	HS-Sr
OCCUPANCY GROUP	R3 & U (Per 2022 CRC)
CONSTRUCTION TYPE	Modified Fire Resistive (IBC Type I-B), sprinklered
LOT NUMBER	23
TRACT NUMBER	41
SANTA CLARA COUNTY DISTRICT	1
PROJECT DESCRIPTION	One of three proposed SFR's on subdivision consisting of APN544-23-040, -041 and -042 at 20245 Gist Rd, Los Gatos, CA 95033. The proposed home is a new two-story 4 beds, 4 baths 5,629 sq. ft. gross area single-family residence with 2,612 sq. ft. of habitable space, a 536 sq. ft. attached two-car garage with two EV L1 spaces, a 312 sq. ft. gym & sauna, a detached 474 sq.ft secondary dwelling. Combined landscaped area is 619 sq.ft.
FIRE PROTECTION DISTRICT	Santa Clara County Central Fire Protection District (CCFD)
WATER DISTRICT	Santa Clara Valley Water District #7, private water well

HAZARDS AND CONSTRAINTS

STATE RESPONSE AREA	SRA 100%
FEMA FLOOD ZONE	ZONE D
WILDLAND-URBAN INTERFACE	In WUI, must comply with WUI Code, CRC R337
COUNTY FAULT LINE RUPTURE HAZARD ZONE	Not in county fault line rupture hazard zone
COUNTY LANDSLIDE HAZARD ZONE	In county landslide zone
STATE SEISMIC HAZARD ZONE	In state seismic hazard zone

CONSULTANTS

ARCHITECTS & ENGINEERING
S3DA Structural & Architectural Design
111 Deerwood Road, Suite 200, San Ramon, CA 94583
(619) 404-0220
Nader Moavenian
nader.m@s3da-design.com
Barett C. Crook, PE

CIVIL ENGINEERING
DRP Enterprises LLC
Daniel Patneaude, PE
206-734-7765
Joanne Singer, PE
760-625-7426
PO Box 4428
Palm Springs, CA 92263

SURVEYORS
MH Engineering
16075 Vineyard Blvd.
Morgan Hill, CA 95037
tel: (408) 779-7381
fax: (408) 226-5712
Allen Andrade, PE
allena@mhengineering.com

GEOTECHNICAL ENGINEERING
Modern Technology Inc
2076 16th Avenue San Francisco CA 94116
tel: (415) 602-2290
Igor Kleiner, PE
tesr@earthlink.net
NOTE: project must conform to geotechnical soils report recommendations

WASTEWATER
Christopher Day Environmental Health Consulting
P.O. Box 26
Redwood City, CA 94064
tel: (650) 293-1045
Christopher Day, R.E.H.S.
christopherdayr@aol.com

CODE COMPLIANCE
This residential construction complies with Title 24 and the following codes:
2022 California Residential Code (CRC)
2022 California Building Code (CBC)
2022 California Mechanical Code (CMC)
2022 California Plumbing Code (CPC)
2022 California Electrical Code (CEC)
2022 California Energy Code (CEnC)
Santa Clara County Zoning Ordinance (SCC Ordinance)

FLOOR AREA DETAILS

Ground floor	Gross floor area
Library	282 ft2
Wine cellar	65 ft2
Library bathroom	63 ft2
Laundry	69 ft2
Hallway	236 ft2
Living room	551 ft2
Living bathroom	59 ft2
Kitchen & Dining	720 ft2
Foyer	157 ft2
Mechanical room	73 ft2
Garage entry area	130 ft2
Garage	536 ft2
Gym & Sauna	
Gym	122 ft2
Sauna	190 ft2
Second floor	
Den	301 ft2
Corridor	140 ft2
Master bedroom	282 ft2
Master bathroom	174 ft2
Master sundeck	585 ft2
Master lounge	147 ft2
Master walk-in closet	154 ft2
Walk-in closet	59 ft2
Laundry	34 ft2
Big bedroom	492 ft2
Small bedroom	285 ft2
Bathroom	79 ft2
Bathroom	107 ft2
Stairway	122 ft2
Sundeck	80 ft2
Primary residence total	**6294 ft2**
Summaries	
Gross floor area excluding decks	5629 ft2
Living area	3047 ft2
Garage	536 ft2
Decks	665 ft2
Gym & sauna	312 ft2
Guest house	**435 ft2**
Guest house northern deck	198 ft2
Guest house southern deck	215 ft2
Decks total	413 ft2
Gross floor area	435 ft2
Living area	435 ft2

Combined areas

Total	7142 ft2
Gross floor area excluding decks	**6064 ft2**
Living area	3047 ft2
Decks	1078 ft2

All measurements to the outside rough surface of enclosing walls or to centerline of walls between rooms where applicable; covered courtyard measured to edges of vertical projection of the floor & deck above per SCC Ordinance §1.30.030

LANDSCAPED AREAS

Camellia terrace	181 ft2
Vegetable garden	277 ft2
Rose terrace	160 ft2
Total	**619 ft2**

FENESTRATION & GLAZING NOTES
Use Class B or higher glazing on all windows and bi-fold doors. Use fully tempered glass with optional safety film lamination.

FIRE NOTES
1. These plans comply with 2022 California Building Code, 2022 California Fire code and district amendments.
2. Occupancy R-3 & U, type I-B, fully sprinkled. Approved automatic system complying with the edition of NFPA 13D currently adopted in Chapter 35 of the California Building Code is required.
3. The designer/installer must submit two sets of plans, calculations and cut sheets for the underground and overhead residential automatic sprinkler system to the central fire protection district.
4. Address numbers must be posted and maintained as shown on the site plan. Numbers must be a minimum of 4 inches in height and of a color contrasting to their background.
5. Roof coverings must be Class A.
6. Job copies of the building plans and permits must remain on-site during inspections.
7. All significant combustible vegetation must be removed within 30 feet of the structure to minimize risk of wildfire casualty. Appropriate separation of vegetative fuels must be maintained in areas between 30 and 100 feet from the structure.
8. Any electric gates must be equipped with the county fire protection district key entry system.
9. All vent openings to be covered by Wildland Flame and Ember Resistant vents approved and listed by the California State Fire Marshal, or WUI vents listed to ASTM E2886 per Section R337.6.2.
10. Roof gutters to be provided with leaf guards per Section R337.5.4.
11. Underside of the roof eaves is to be finished with an ignition resistant or non-combustible material to comply with WUI requirements of Section R337.7.

VICINITY MAP

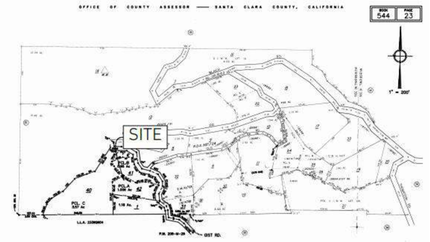

ASSESSOR'S PARCEL MAP

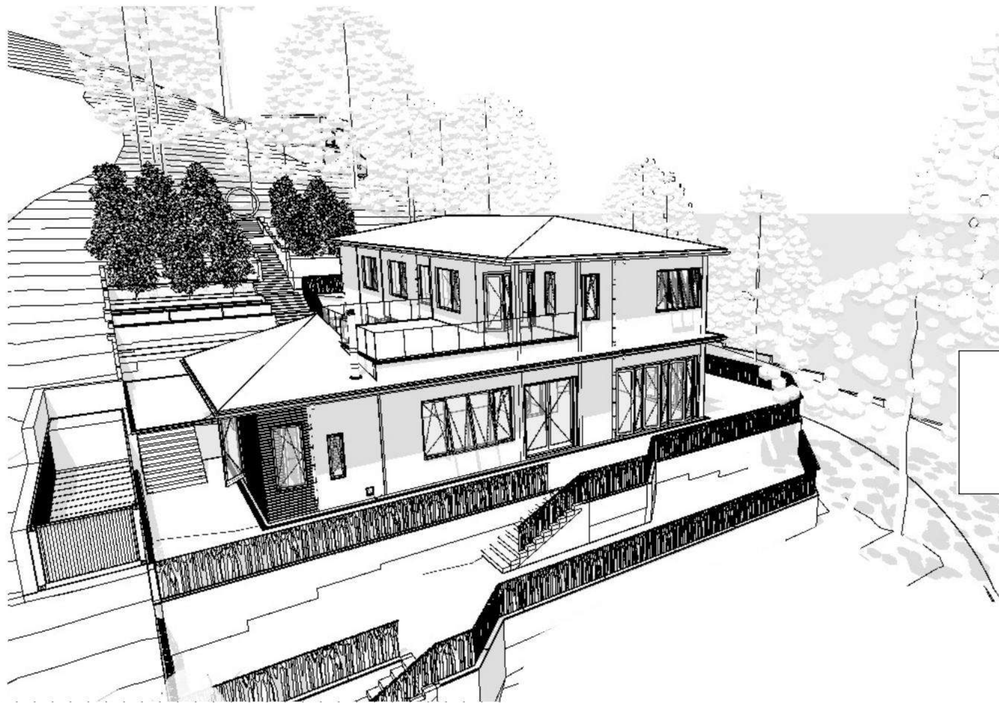

GIST RD. SFR 2

APN544-23-042; PROPOSED ADDRESS: 20599 GIST RD, LOS GATOS, CA 95033

REVISION HISTORY

S3DA Structural & Architectural Design
4196 Adams Ave. San Diego CA 92116
(619) 404-0220

Mr. Nader Moavenian
nader.m@s3da-design.com

REGISTERED PROFESSIONAL ENGINEER
BARRETT CROOK
C 057186
Exp. 12-31-2021
CIVIL
STATE OF CALIFORNIA

2-11-2020

1. The contractor must check all dimensions on-site before commencing work

2. These drawings are to be read in conjunction with all relevant designer, engineer or specialist drawings and specifications

3. The contractor is responsible for providing all necessary temporary support to the building and any adjacent structures

COUNTY APPROVAL STAMP

REVISION DATE
01/02/21

DRAWING NAME
123 SFR2. Cover sheet

Drawing Scale

H2-A0

Garage
536 sq ft

Mech room
73 sq ft

Laundry
69 sq ft

Garage entry area
130 sq ft

Foyer
157 sq ft

Library
282 sq ft

Bathroom
63 sq ft

Wine cellar
65 sq ft

Hallway
236 sq ft

Living
551 sq ft

Bathroom
59 sq ft

Kitchen and dining
710 sq ft

Sauna
190 sq ft

Gym
122 sq ft

SOLID CORE DOOR
20-MINUTE FIRE RATING MIN

1% slope from slab edge

GIST RD. SFR 2

APN544-23-042; PROPOSED ADDRESS: 20599 GIST RD, LOS GATOS, CA 95033

REVISION HISTORY

S3DA Structural & Architectural Design
4196 Adams Ave. San Diego CA 92116
(619) 404-0220

Mr. Nader Moavenian
nader.m@s3da-design.com

REGISTERED PROFESSIONAL ENGINEER
NADER MOAVENIAN
C 057196
Exp. 12-31-202[illegible]
CIVIL
STATE OF CALIFORNIA

2-11-2020

1. The contractor must check all dimensions on-site before commencing work

2. These drawings are to be read in conjunction with all relevant designer, engineer or specialist drawings and specifications

3. The contractor is responsible for providing all necessary temporary support to the building and any adjacent structures

COUNTY APPROVAL STAMP

REVISION DATE
01/02/21

DRAWING NAME
124 SFR2 1/4" Ground floor plan

Drawing Scale

H2-A2

GIST RD. SFR 2

APN544-23-042; PROPOSED ADDRESS: 20599 GIST RD, LOS GATOS, CA 95033

REVISION HISTORY

S3DA Structural & Architectural Design
4196 Adams Ave. San Diego CA 92116
(619) 404-0220

Mr. Nader Moavenian
nader.m@s3da-design.com

REGISTERED PROFESSIONAL ENGINEER
GARRETT GROOM
C 057186
Exp. 12-31-2021
CIVIL
STATE OF CALIFORNIA

2-11-2020

1. The contractor must check all dimensions on-site before commencing work

2. These drawings are to be read in conjunction with all relevant designer, engineer or specialist drawings and specifications

3. The contractor is responsible for providing all necessary temporary support to the building and any adjacent structures

COUNTY APPROVAL STAMP

REVISION DATE
01/02/21

DRAWING NAME
125 SFR2 1/4" Second floor plan

Drawing Scale
1/4" = 1'-0"

H2-A3

N

Bathroom
107 sq ft

Sun deck
80 sq ft

Big bedroom
492 sq ft

Small bedroom
285 sq ft

Walk-in closet
59 sq ft

Laundry
34 sq ft

Staircase
122 sq ft

Bathroom
79 sq ft

Corridor
140 sq ft

Den
381 sq ft

Master bathroom
174 sq ft

Master bedroom
282 sq ft

Master closet
154 sq ft

Master lounge
147 sq ft

Master sun deck
585 sq ft

Second floor roof
See roof plan

Ground floor roof
See roof plan

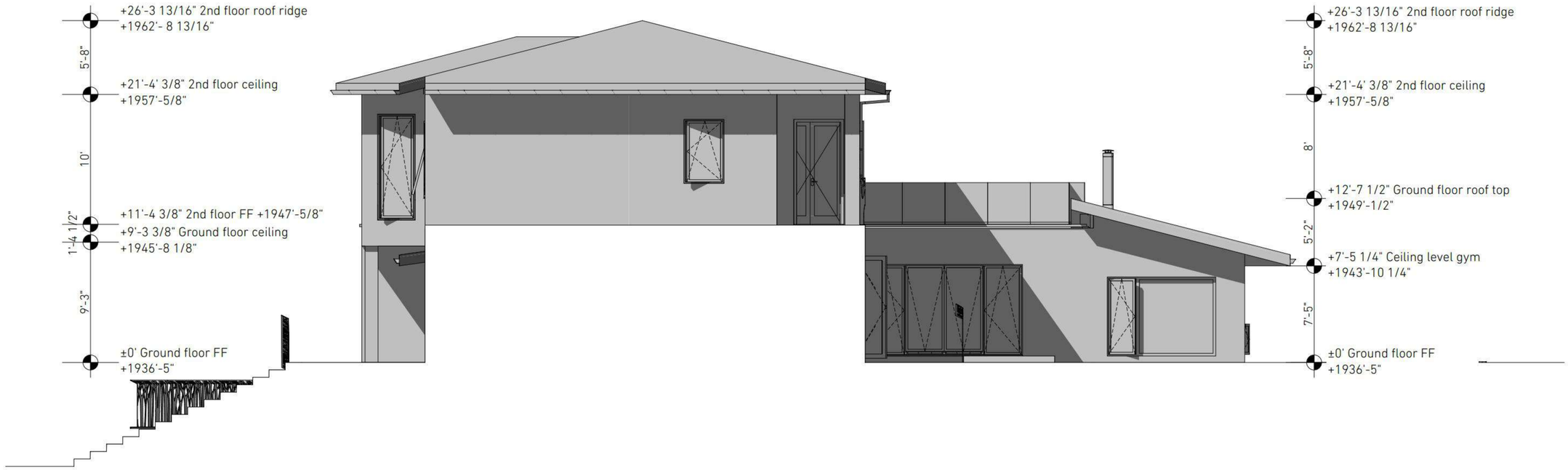

West elevation

GIST RD. SFR 2

APN544-23-042; PROPOSED ADDRESS: 20599

GIST RD, LOS GATOS, CA 95033

REVISION HISTORY

S3DA Structural & Architectural Design
4196 Adams Ave. San Diego CA 92116
(619) 404-0220

Mr. Nader Moavenian
nader.m@s3da-design.com

REGISTERED PROFESSIONAL ENGINEER
BARRETT CROOK
C 057186
Exp.12.31.2021
CIVIL
STATE OF CALIFORNIA

2-11-2020

1. The contractor must check all dimensions on-site before commencing work

2. These drawings are to be read in conjunction with all relevant designer, engineer or specialist drawings and specifications

3. The contractor is responsible for providing all necessary temporary support to the building and any adjacent structures

COUNTY APPROVAL STAMP

REVISION DATE
01/02/21

DRAWING NAME
126 SFR2 1/4" West elevation

Drawing Scale

H2-A4

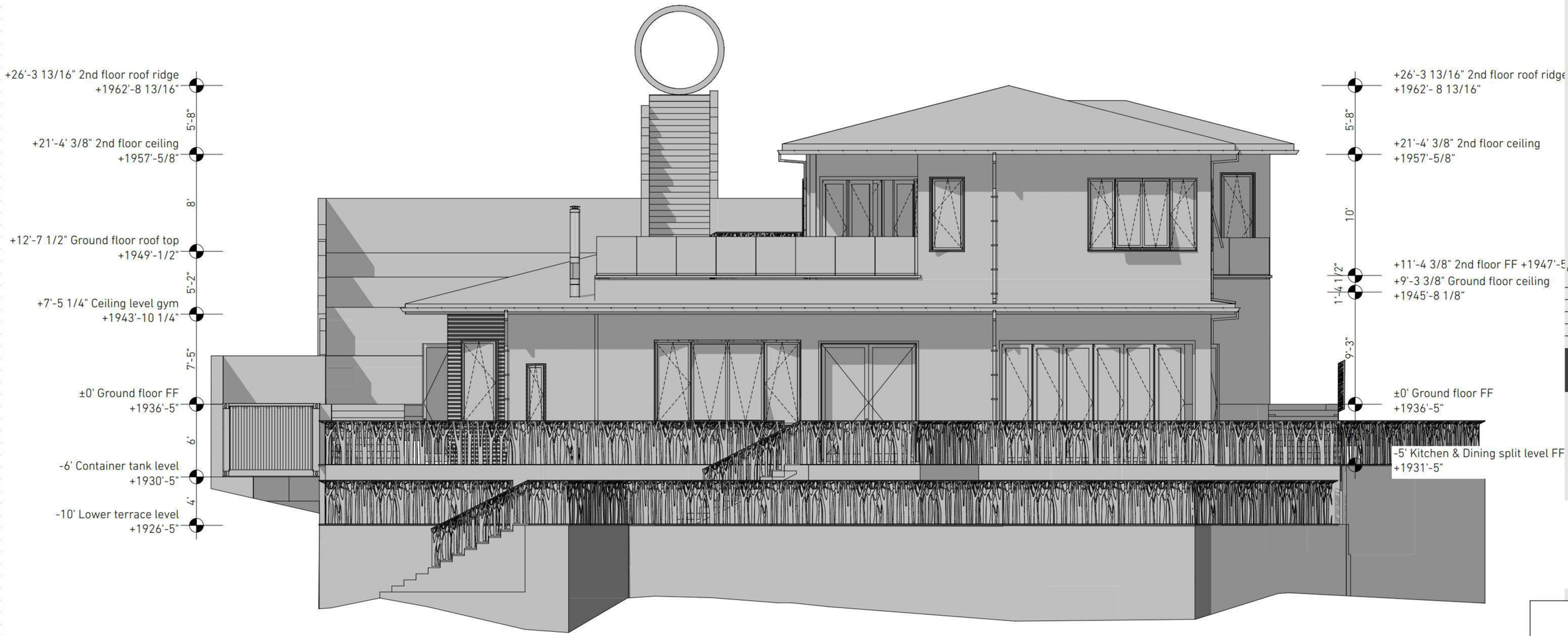

East elevation

GIST RD. SFR 2

APN544-23-042; PROPOSED ADDRESS: 20599

GIST RD, LOS GATOS, CA 95033

REVISION HISTORY

S3DA Structural & Architectural Design
4196 Adams Ave. San Diego CA 92116
(619) 404-2220

Mr. Nader Moavenian
nader.m@s3da-design.com

REGISTERED PROFESSIONAL ENGINEER
BARRETT CROOK
C 057196
Exp. 12.31.202
CIVIL
STATE OF CALIFORNIA

2-11-2020

1. The contractor must check all dimensions on-site before commencing work

2. These drawings are to be read in conjunction with all relevant designer, engineer or specialist drawings and specifications

3. The contractor is responsible for providing all necessary temporary support to the building and any adjacent structures

COUNTY APPROVAL STAMP

REVISION DATE
01/02/21

DRAWING NAME
127 SFR2 1/4"
East elevation

Drawing Scale
1/4" = 1'-0"

H2-A5

North elevation

GIST RD. SFR 2

APN544-23-042; PROPOSED ADDRESS: 20599 GIST RD, LOS GATOS, CA 95033

REVISION HISTORY

S3DA Structural & Architectural Design
4196 Adams Ave. San Diego CA 92116
(619) 404-0220

Mr. Nader Moavenian
nader.m@s3da-design.com

REGISTERED PROFESSIONAL ENGINEER
BARRETT CROOK
C 057196
Exp. 12-31-202
CIVIL
STATE OF CALIFORNIA
2-11-2020

1. The contractor must check all dimensions on-site before commencing work

2. These drawings are to be read in conjunction with all relevant designer, engineer or specialist drawings and specifications

3. The contractor is responsible for providing all necessary temporary support to the building and any adjacent structures

COUNTY APPROVAL STAMP

REVISION DATE
01/02/21

DRAWING NAME
128 SFR2 1/4" North elevation

Drawing Scale
1/4" = 1'-0"

H2-A6

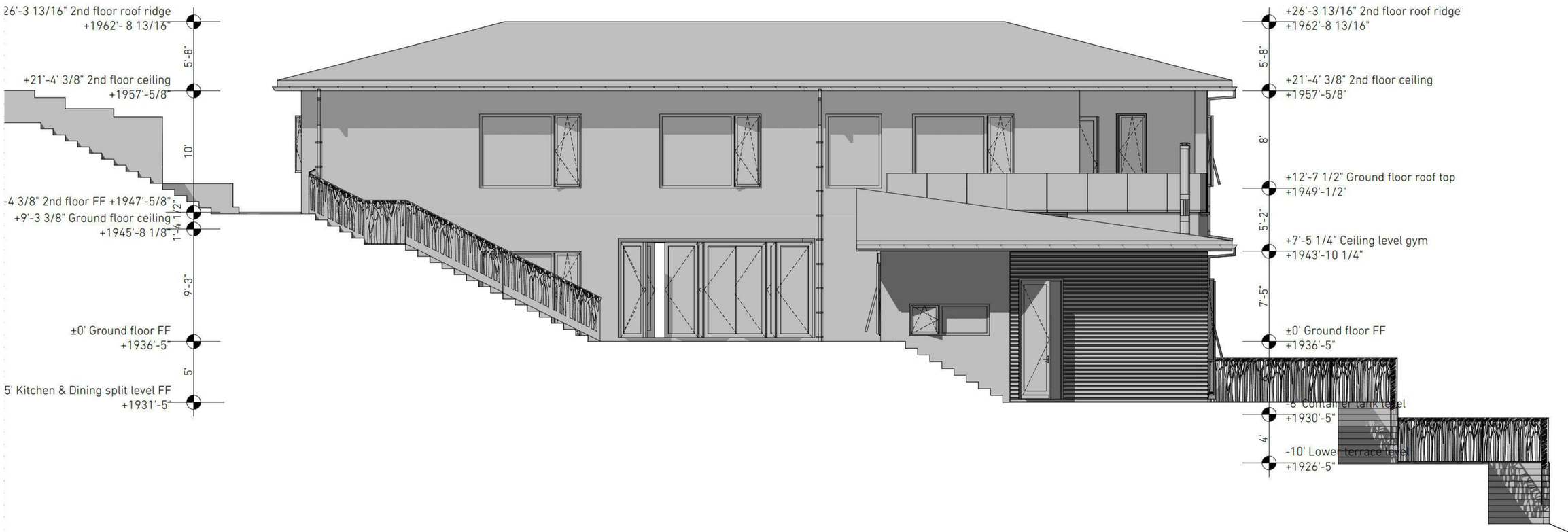

South elevation

EXTERIOR FINISHES

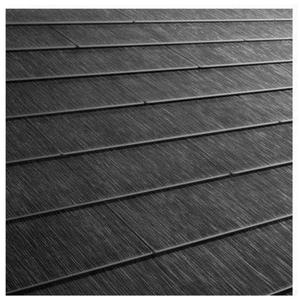

TESLA ROOF

ROOF FINISH

FLAMED BLACK GRANITE

EXTERIOR WALL CLADDING
ALU HONEYCOMB CLADDING PANELS

ALUMINUM DECKING w/WOOD FINISH

DECKS, BALCONIES

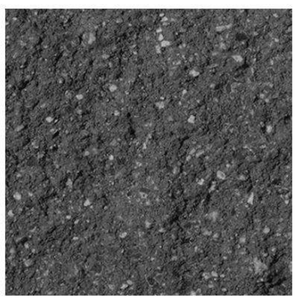

ONYX SPLIT CMU

CMU RETAINING WALLS

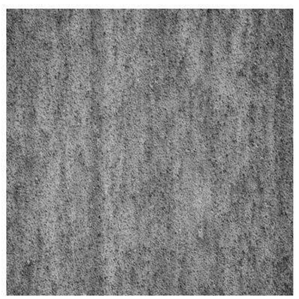

CORTEN STEEL

EXTERIOR RAILINGS
TREE PLANTERS
VEGETABLE PLANTERS

GRANITE STEPS

EXTERIOR ARCHITECTURAL STEPS
LANDSCAPING STEPS

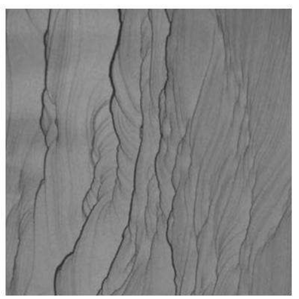

SAND STONE

LANDSCAPE TILES
YARD TILES

GIST RD. SFR 2

APN544-23-042; PROPOSED ADDRESS: 20599
GIST RD, LOS GATOS, CA 95033

REVISION HISTORY

S3DA Structural & Architectural Design
4196 Adams Ave, San Diego CA 92116
(619) 404-0220

Mr. Nader Moavenian
nader.m@s3da-design.com

REGISTERED PROFESSIONAL ENGINEER
BARRETT CROOK
C 057199
Exp. 12.31.2021
CIVIL
STATE OF CALIFORNIA

2-11-2020

1. The contractor must check all dimensions on-site before commencing work

2. These drawings are to be read in conjunction with all relevant designer, engineer or specialist drawings and specifications

3. The contractor is responsible for providing all necessary temporary support to the building and any adjacent structures

COUNTY APPROVAL STAMP

REVISION DATE
01/02/21

DRAWING NAME
129 SFR2 1/4" South elevation

Drawing Scale

H2-A7

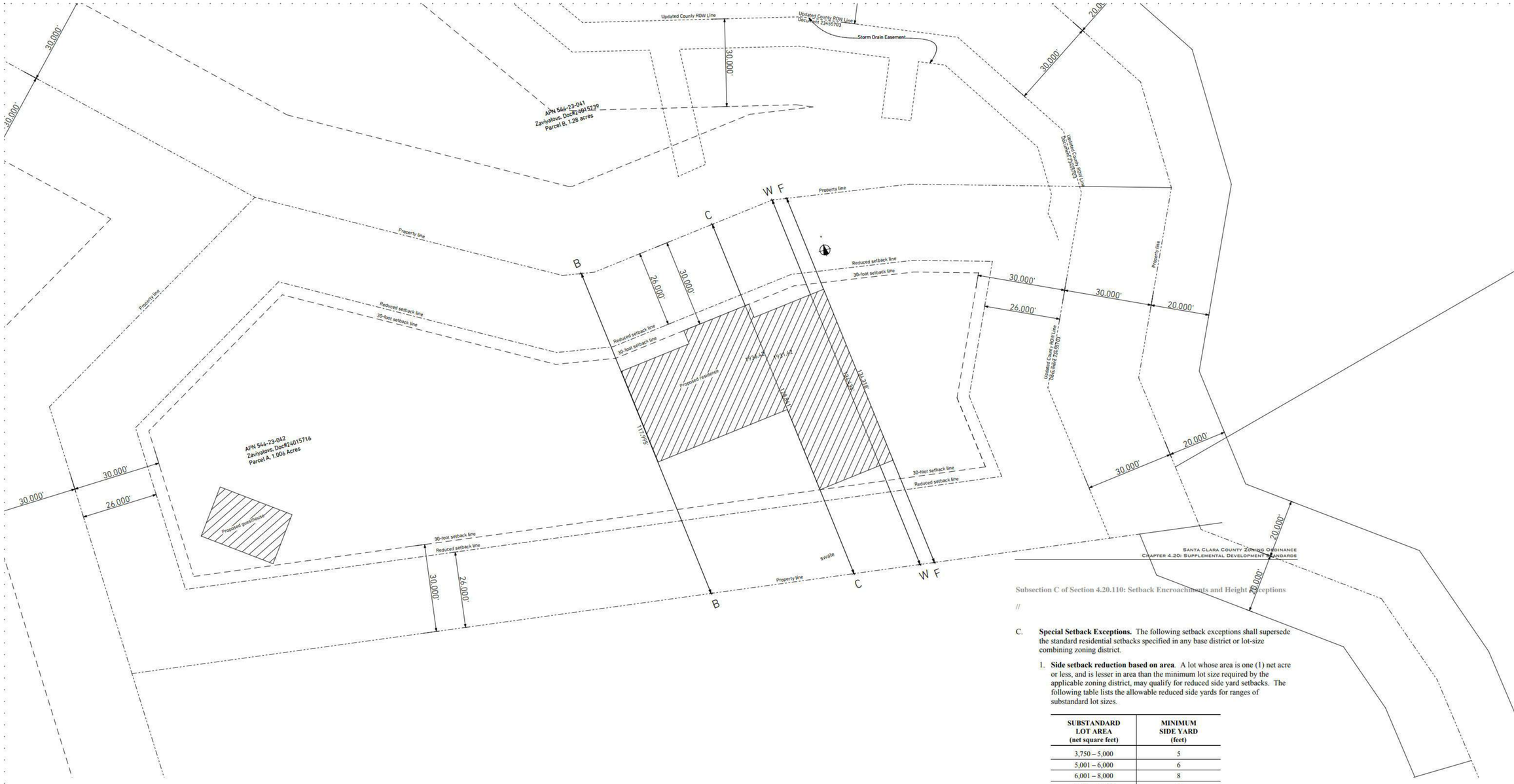

REDUCED SETBACKS FOR APN544-23-042 1/16" = 1'-0"

REDUCED SETBACK CALCULATION FOR APN544-23-042 PER SCC ZONING ORDINANCE SUBSECTION C. PARAGRAPH 2 OF SECTION 4.20.110: SETBACK ENCROACHMENTS AND HEIGHT EXCEPTIONS

Segment	Length	Feet
REAR GARAGE	B-B	117.995
CENTER WALL	C-C	128.841
WIDEST PART OF PARCEL	W-W	134.434
FRONT	F-F	134.318
	Average	128.897
	20% of average	25.779
	Rounded to nearest whole foot	**26**

Santa Clara County Zoning Ordinance
Chapter 4.20: Supplemental Development Standards

Subsection C of Section 4.20.110: Setback Encroachments and Height Exceptions

//

C. **Special Setback Exceptions.** The following setback exceptions shall supersede the standard residential setbacks specified in any base district or lot-size combining zoning district.

1. **Side setback reduction based on area**. A lot whose area is one (1) net acre or less, and is lesser in area than the minimum lot size required by the applicable zoning district, may qualify for reduced side yard setbacks. The following table lists the allowable reduced side yards for ranges of substandard lot sizes.

SUBSTANDARD LOT AREA (net square feet)	MINIMUM SIDE YARD (feet)
3,750 – 5,000	5
5,001 – 6,000	6
6,001 – 8,000	8
8,001 – 10,000	10
10,001 – 20,000	15
20,001 – 1 acre (net)	20

2. **Side setback reduction based on width.** A narrow lot (having an exceptionally large depth-to-width ratio) shall have minimum side yard setbacks equal to 20 percent of the lot width whenever such setback dimension would be lesser than would otherwise be provided for by the Zoning Ordinance. This allowance shall not, however, allow for an exterior side yard setback on a corner lot to be less than 10 feet.

For the purposes of this subsection, width shall be measured across the portion of the lot where the dwelling is or will be located, and the resulting side setback shall be rounded to the nearest whole foot.

Fig. 4.20-11

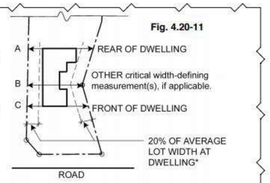

*A+B+C ÷ 3 = AVERAGE LOT WIDTH

AVERAGE LOT WIDTH X 0.20 (20%) = SIDE YARD SETBACK

Rev: February 2008

SCC ZONING ORDINANCE, SUBSECTION C, SECTION 4.20.110

GIST RD. SFR 2

APN544-23-042; PROPOSED ADDRESS: 20599 GIST RD, LOS GATOS, CA 95033

REVISION HISTORY

S3DA Structural & Architectural Design
4196 Adams Ave. San Diego CA 92116
(619) 404-0220

Mr. Nader Moavenian
nader.m@s3da-design.com

REGISTERED PROFESSIONAL ENGINEER BARRETT CROOK C 057186 Exp. 12-31-2021 CIVIL STATE OF CALIFORNIA

2-11-2020

1. The contractor must check all dimensions on-site before commencing work

2. These drawings are to be read in conjunction with all relevant designer, engineer or specialist drawings and specifications

3. The contractor is responsible for providing all necessary temporary support to the building and any adjacent structures

COUNTY APPROVAL STAMP

REVISION DATE
01/02/21

DRAWING NAME
130 SFR2. Reduced setback calcs

Drawing Scale
1/16" = 1'-0"

H2-A8

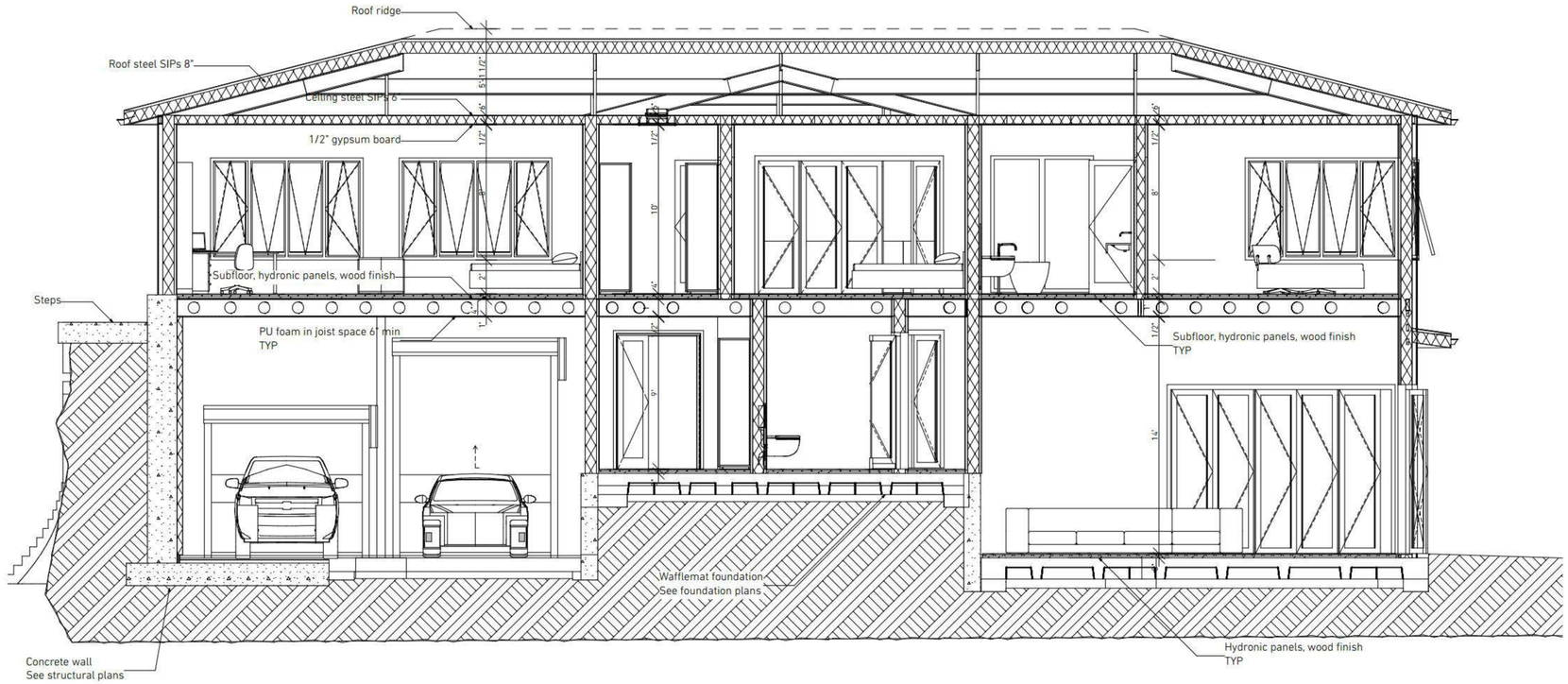

AS-1

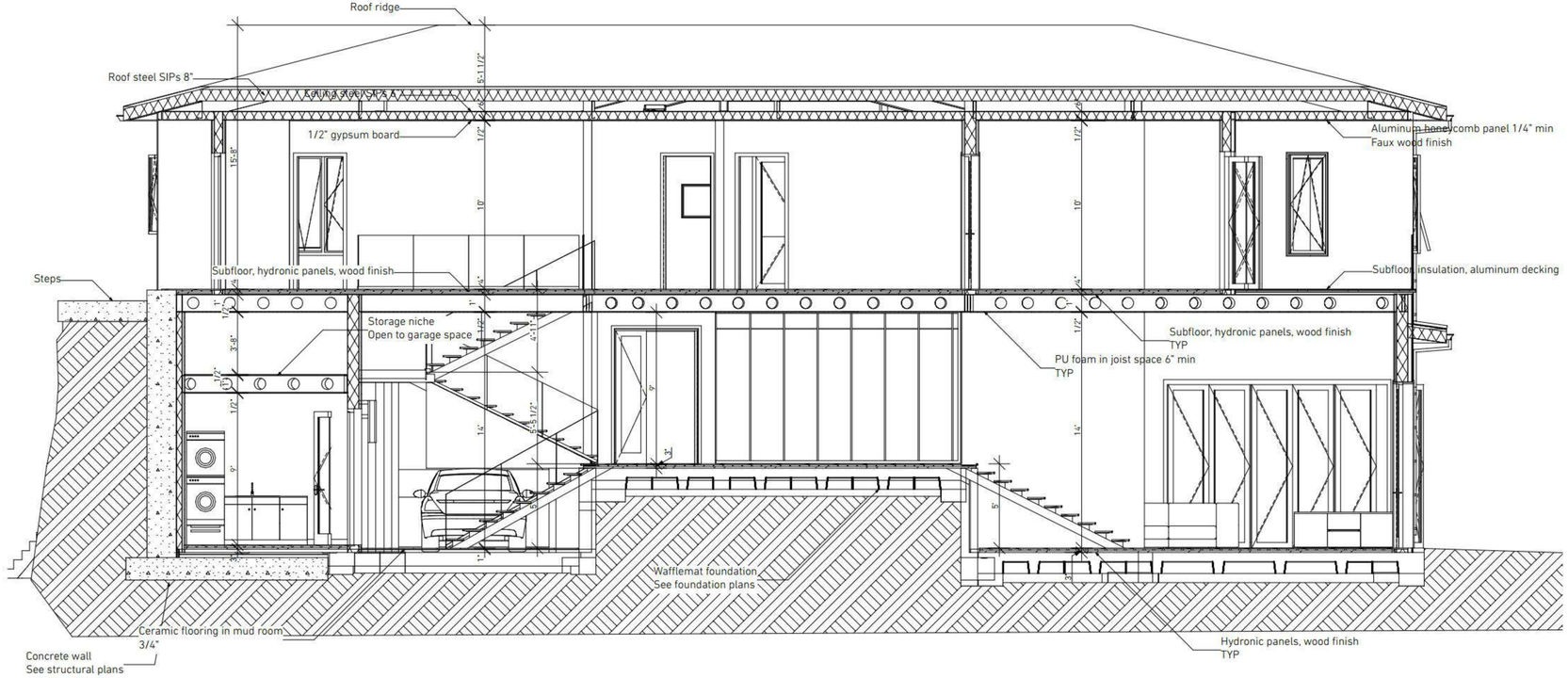

AS-2

GIST RD. SFR 2

APN544-23-042; PROPOSED ADDRESS: 20599 GIST RD, LOS GATOS, CA 95033

REVISION HISTORY

S3DA Structural & Architectural Design
4196 Adams Ave. San Diego CA 92116
(619) 404-0220

Mr. Nader Moavenian
nader.m@s3da-design.com

REGISTERED PROFESSIONAL ENGINEER
BARRETT CROOKE
C 057186
Exp. 12-31-2021
CIVIL
STATE OF CALIFORNIA

2-11-2020

1. The contractor must check all dimensions on-site before commencing work

2. These drawings are to be read in conjunction with all relevant designer, engineer or specialist drawings and specifications

3. The contractor is responsible for providing all necessary temporary support to the building and any adjacent structures

COUNTY APPROVAL STAMP

REVISION DATE
01/02/21

DRAWING NAME
131 SFR2 Architectural sections

Drawing Scale

H2-A9

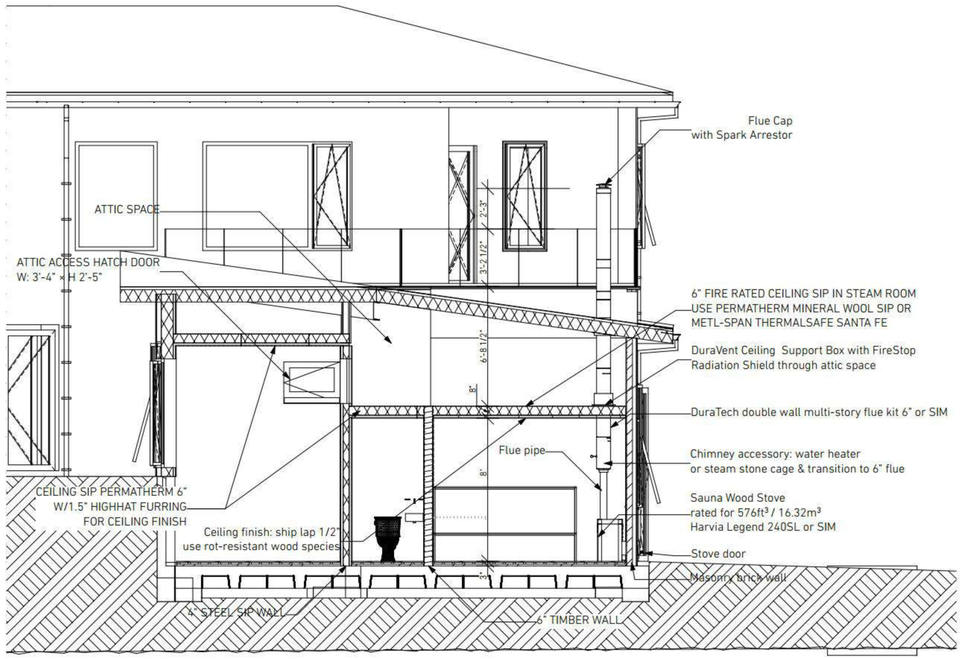

AS-3

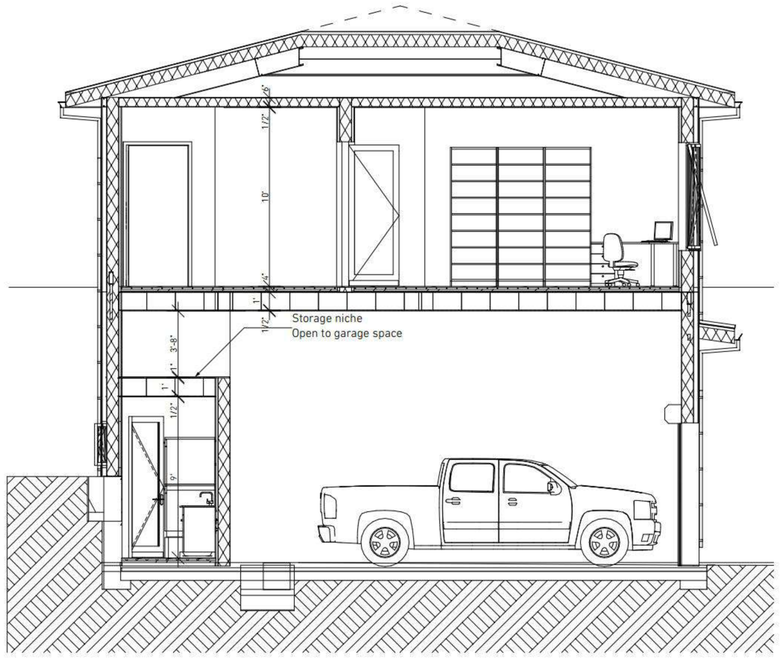

AS-4

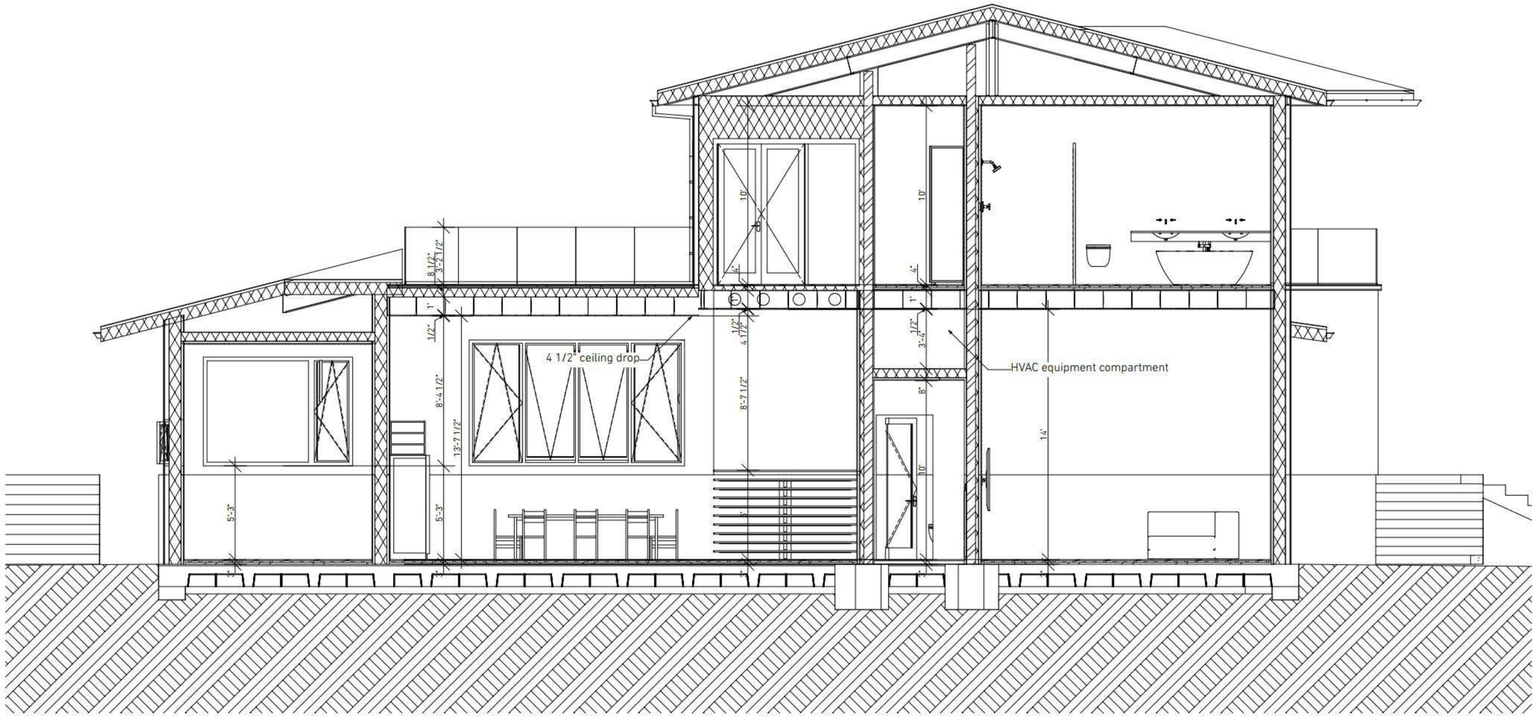

AS-5

GIST RD. SFR 2

APN544-23-042; PROPOSED ADDRESS: 20599 GIST RD, LOS GATOS, CA 95033

REVISION HISTORY

S3DA Structural & Architectural Design
4196 Adams Ave. San Diego CA 92116
(619) 404-0220

Mr. Nader Moavenian
nader.m@s3da-design.com

REGISTERED PROFESSIONAL ENGINEER
BARRETT CROOK
C 057186
Exp. 12-31-2021
CIVIL
STATE OF CALIFORNIA

2-11-2020

1. The contractor must check all dimensions on-site before commencing work

2. These drawings are to be read in conjunction with all relevant designer, engineer or specialist drawings and specifications

3. The contractor is responsible for providing all necessary temporary support to the building and any adjacent structures

COUNTY APPROVAL STAMP

REVISION DATE
01/02/21

DRAWING NAME
132 SFR2 Architectural sections

Drawing Scale

H2-A10

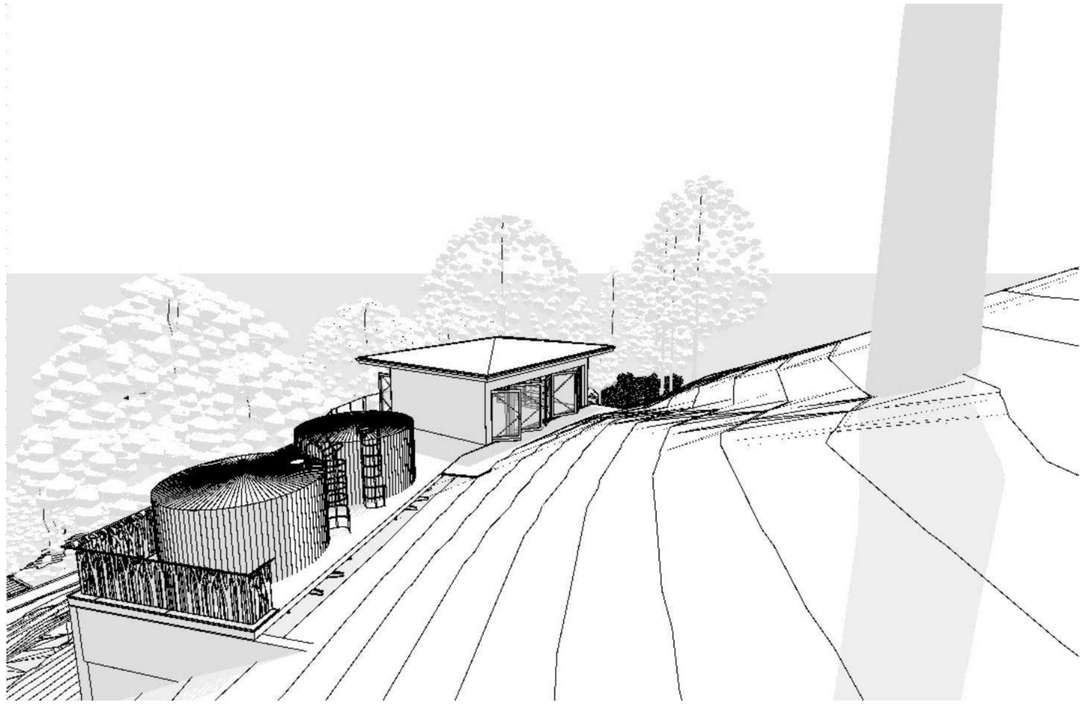

View from the South-West

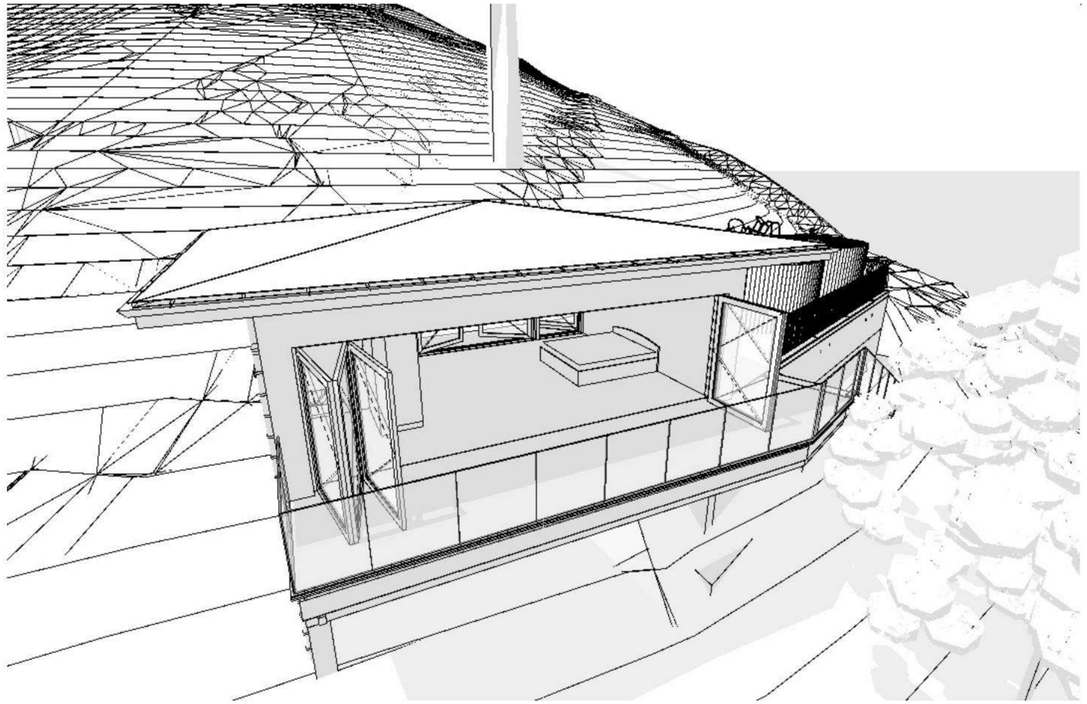

View from the North-East

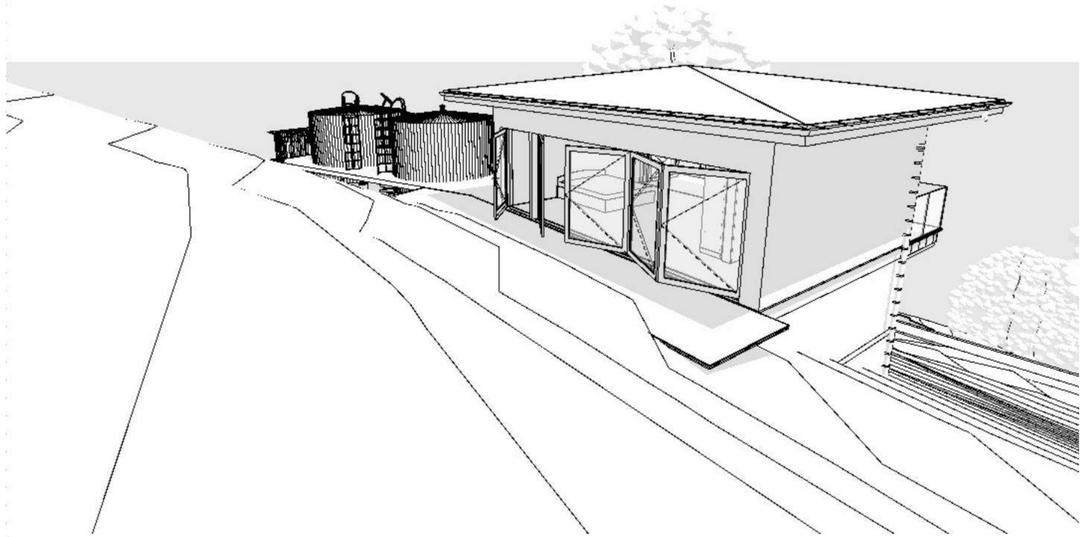

View from the South-East

GIST RD. SFR 2

APN544-23-042; PROPOSED ADDRESS: 20599 GIST RD, LOS GATOS, CA 95033

REVISION HISTORY

S3DA Structural & Architectural Design
4196 Adams Ave. San Diego CA 92116
(619) 404-0220

Mr. Nader Moavenian
nader.m@s3da-design.com

REGISTERED PROFESSIONAL ENGINEER
BARRETT CROOK
C 057196
Exp. 12-31-202
CIVIL
STATE OF CALIFORNIA

2-11-2020

1. The contractor must check all dimensions on-site before commencing work

2. These drawings are to be read in conjunction with all relevant designer, engineer or specialist drawings and specifications

3. The contractor is responsible for providing all necessary temporary support to the building and any adjacent structures

COUNTY APPROVAL STAMP

REVISION DATE
01/02/21

DRAWING NAME
133 SFR2 Guest house cover sheet

Drawing Scale

H2-A11

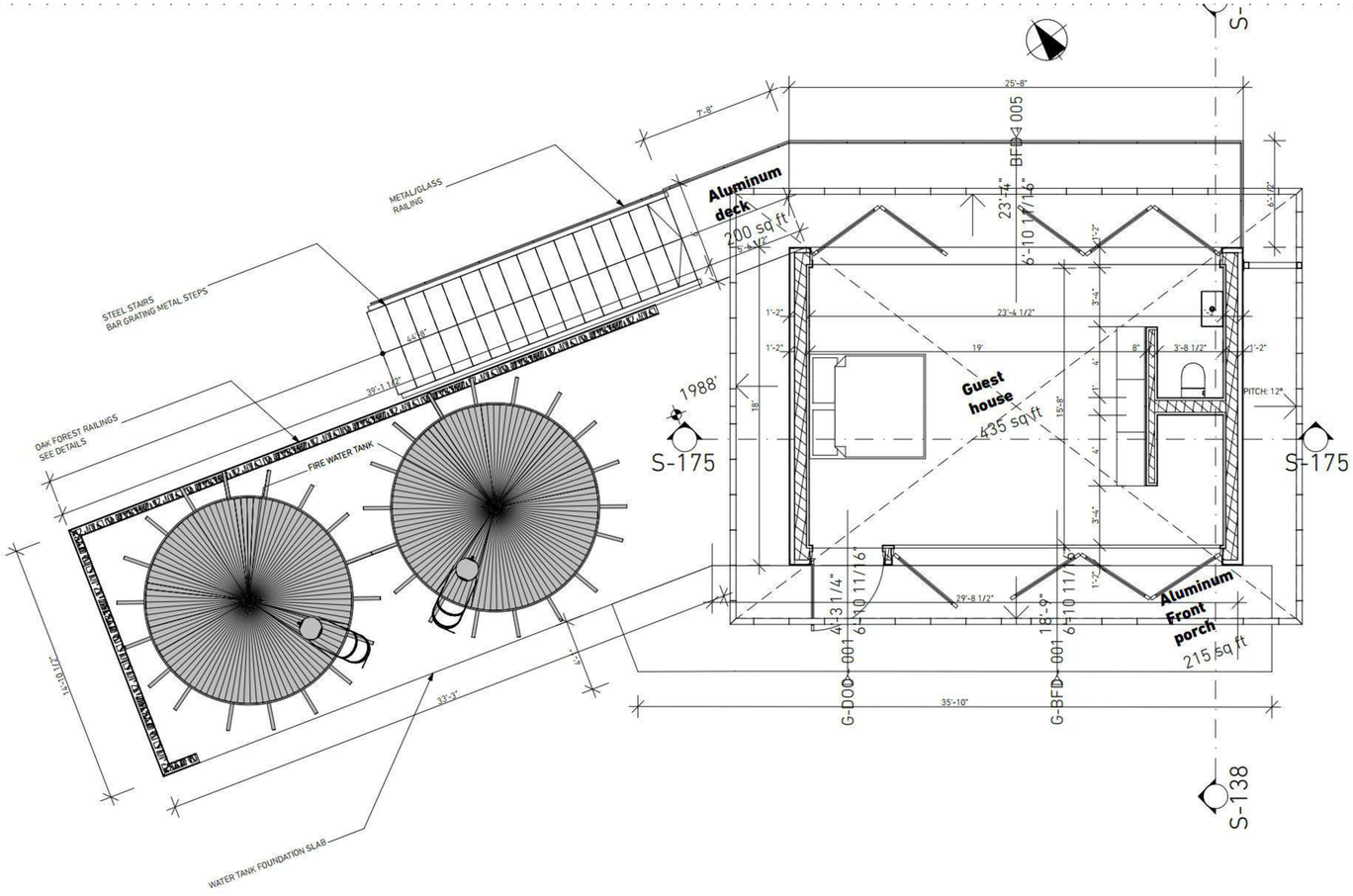

S-138 1/4" = 1'-0"

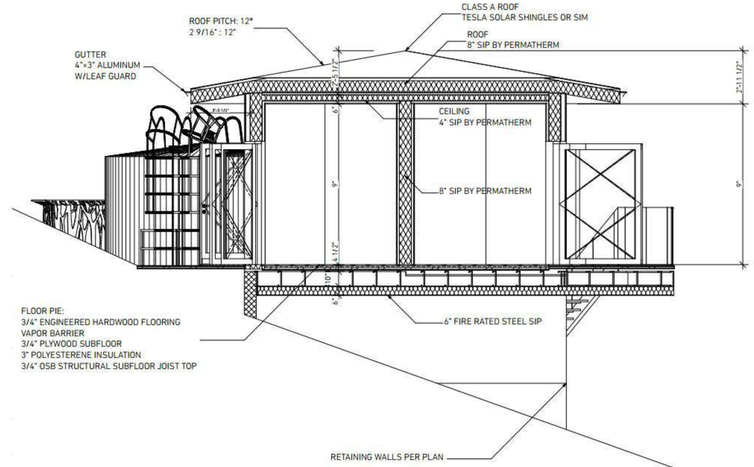

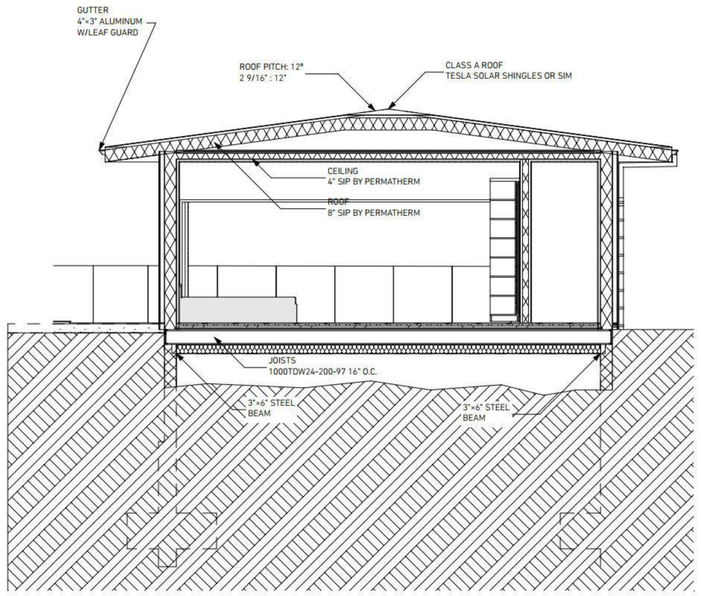

S-175 1/4" = 1'-0"

GIST RD. SFR 2

APN544-23-042; PROPOSED ADDRESS: 20599 GIST RD, LOS GATOS, CA 95033

REVISION HISTORY

S3DA Structural & Architectural Design
4196 Adams Ave. San Diego CA 92116
(619) 404-0220

Mr. Nader Moavenian
nader.m@s3da-design.com

REGISTERED PROFESSIONAL ENGINEER
BARRETT CROOK
C 057196
Exp. 12-31-2021
CIVIL
STATE OF CALIFORNIA

2-11-2020

1. The contractor must check all dimensions on-site before commencing work

2. These drawings are to be read in conjunction with all relevant designer, engineer or specialist drawings and specifications

3. The contractor is responsible for providing all necessary temporary support to the building and any adjacent structures

COUNTY APPROVAL STAMP

REVISION DATE
01/02/21

DRAWING NAME
134 SFR2 Guest house floor plan & sections

Drawing Scale
1/4" = 1'-0"

H2-A12

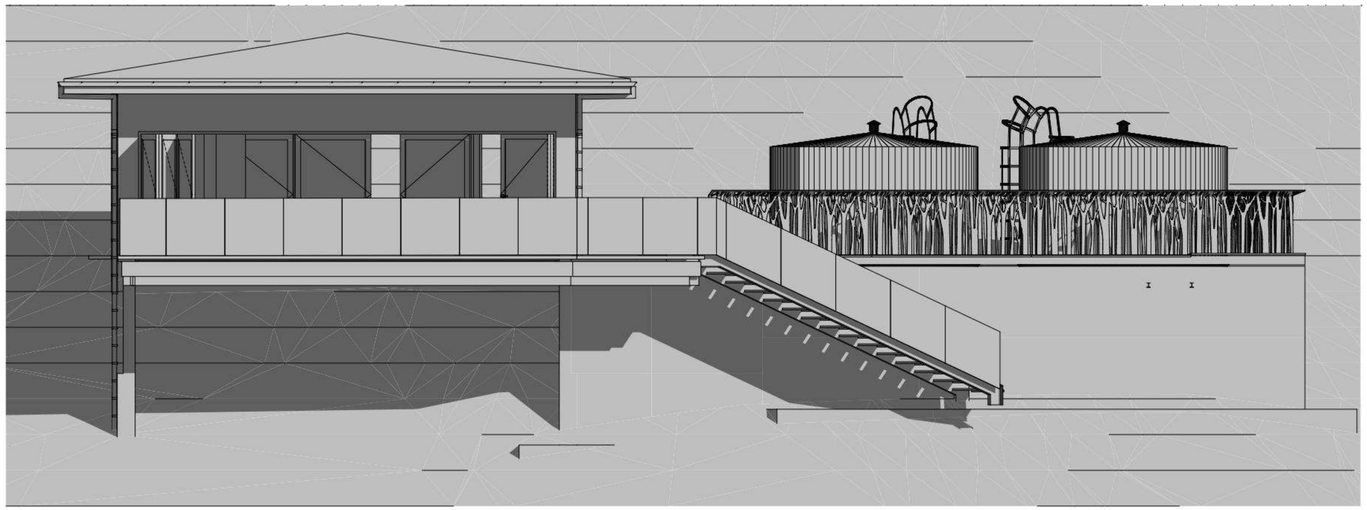

Guest House. North Elevation 1/4" = 1'-0"

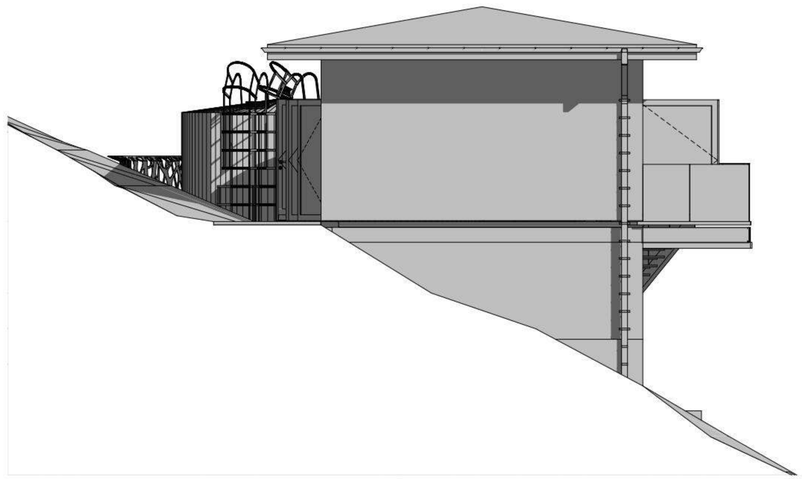

Guest House. East Elevation 1/4" = 1'-0"

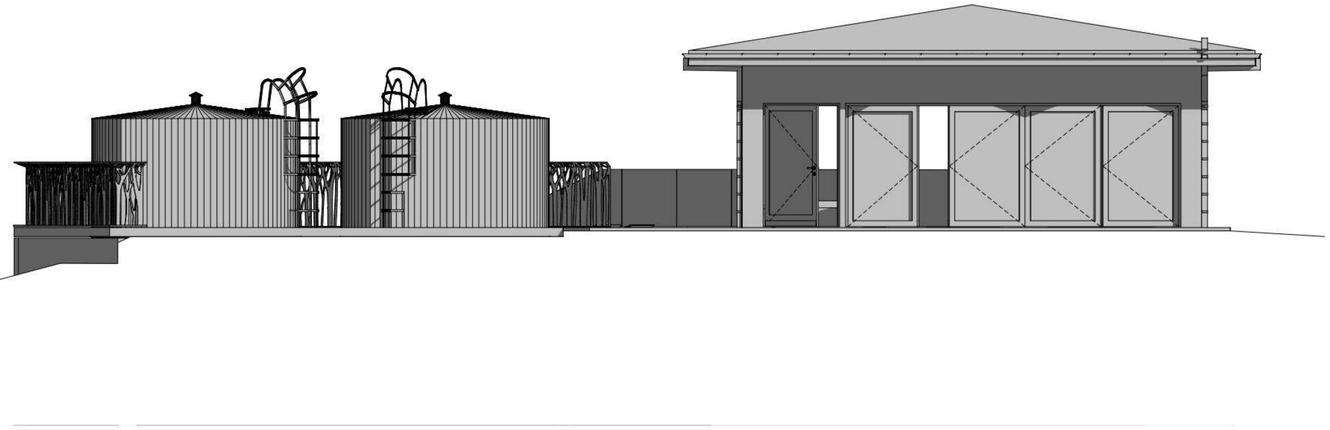

Guest House. South Elevation 1/4" = 1'-0"

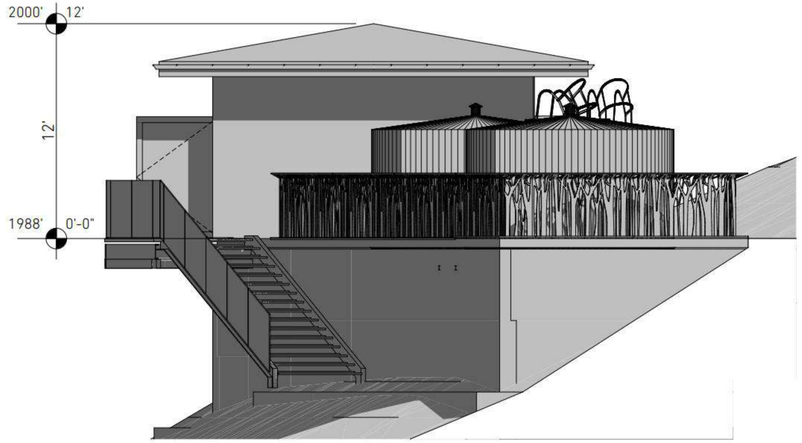

Guest House. West Elevation 1/4" = 1'-0"

EXTERIOR FINISHES

TESLA ROOF

ROOF FINISH

FLAMED BLACK GRANITE

EXTERIOR WALL CLADDING
ALU HONEYCOMB CLADDING PANELS

ALUMINUM DECKING w/WOOD FINISH

DECKS, BALCONIES

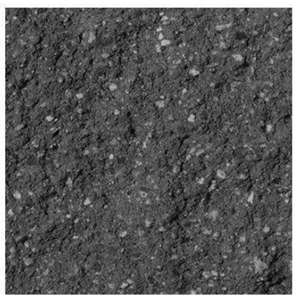

ONYX SPLIT CMU

CMU RETAINING WALLS

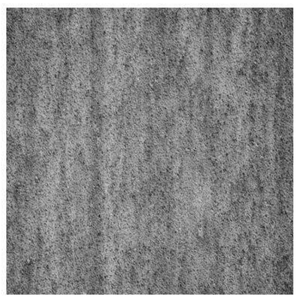

CORTEN STEEL

EXTERIOR RAILINGS
TREE PLANTERS
VEGETABLE PLANTERS

GRANITE STEPS

EXTERIOR ARCHITECTURAL STEPS
LANDSCAPING STEPS

SAND STONE

LANDSCAPE TILES
YARD TILES

GIST RD. SFR 2

APN544-23-042; PROPOSED ADDRESS: 20599
GIST RD, LOS GATOS, CA 95033

REVISION HISTORY

S3DA Structural & Architectural Design
4196 Adams Ave. San Diego CA 92116
(619) 404-0220

Mr. Nader Moavenian
nader.m@s3da-design.com

REGISTERED PROFESSIONAL ENGINEER
BARRETT CROOK
C 057196
Ex: 12.31.2021
CIVIL
STATE OF CALIFORNIA
2-11-2020

1. The contractor must check all dimensions on-site before commencing work

2. These drawings are to be read in conjunction with all relevant designer, engineer or specialist drawings and specifications

3. The contractor is responsible for providing all necessary temporary support to the building and any adjacent structures

COUNTY APPROVAL STAMP

REVISION DATE
01/02/21

DRAWING NAME
135 SFR2 Guest house elevations

Drawing Scale
1/4" = 1'-0"

H2-A13

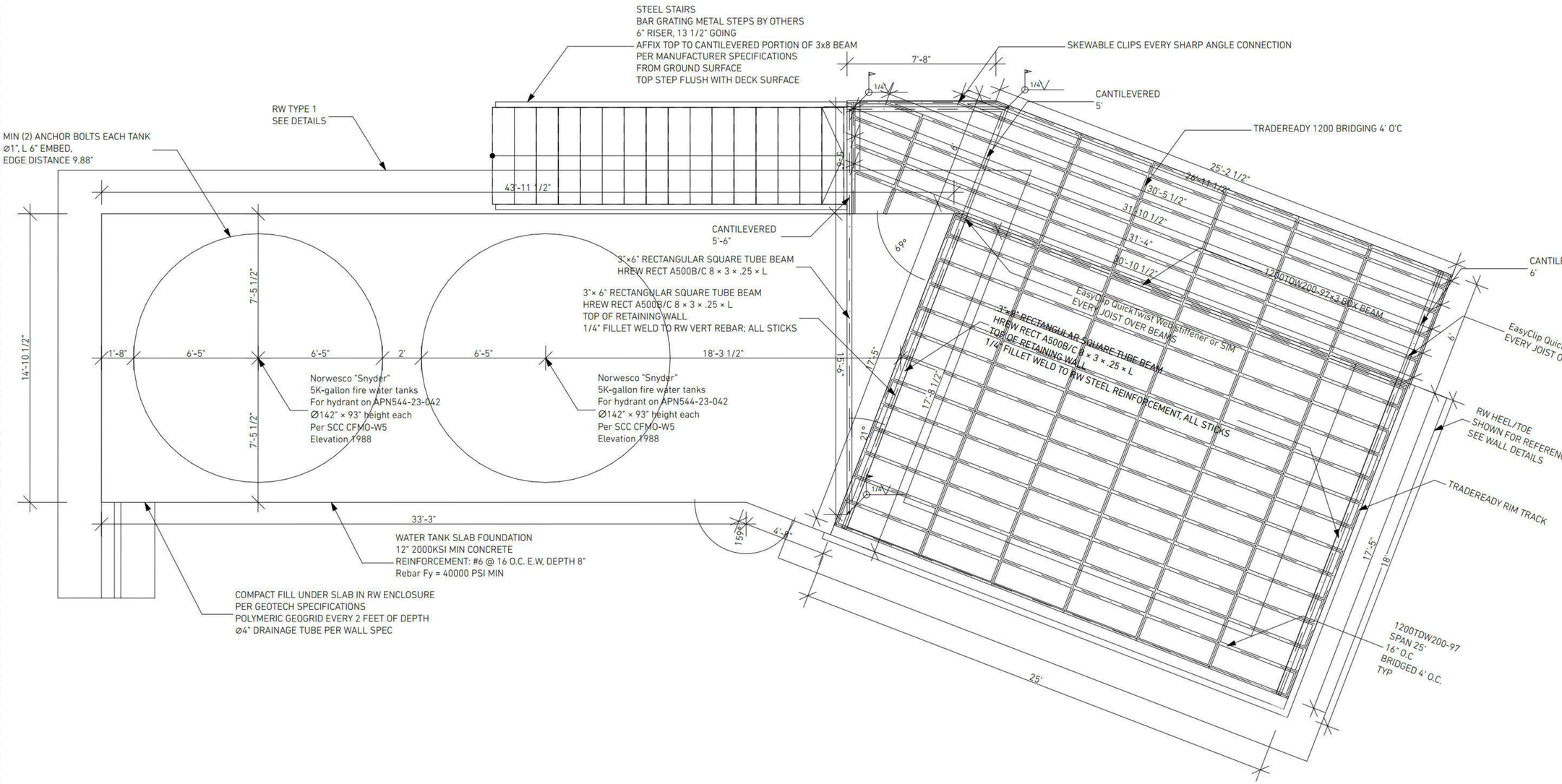

GIST RD. SFR 2

APN544-23-042; PROPOSED ADDRESS: 20599

GIST RD, LOS GATOS, CA 95033

REVISION HISTORY

S3DA Structural & Architectural Design
4196 Adams Ave. San Diego CA 92116
(619) 404-0220

Mr. Nader Moavenian
nader.m@s3da-design.com

REGISTERED PROFESSIONAL ENGINEER
BARRETT CROOK
C 057196
Ex: 12.31.202
CIVIL
STATE OF CALIFORNIA

2-11-2020

1. The contractor must check all dimensions on-site before commencing work

2. These drawings are to be read in conjunction with all relevant designer, engineer or specialist drawings and specifications

3. The contractor is responsible for providing all necessary temporary support to the building and any adjacent structures

COUNTY APPROVAL STAMP

REVISION DATE
01/02/21

DRAWING NAME
136 SFR2 Guest house. Structure

Drawing Scale

H2-A14

INSTALL CLASS A ROOF COVER PER SANTA CLARA COUNTY APPROVAL CONDITIONS. FOLLOW MANUFACTURER'S SPECIFICAITONS. DO NOT EXCEED 40PSF DEAD LOAD PER PERMATHERM SIP SPAN TABLE SPECIFICATIONS

PHOTOVOLTAIC CLASS A **TESLA ROOF WEIGHT**

TESLA ROOF TILES WEIGHT	LBS
1 PHOTOVOLTAIC TILE (PVT)	**23**
1 GLASS TILE (GT)	**13**

WEIGHT PER SQUARE FOOT	PSF
1 sf of PVT	**7.3**
1 sf of GT	**4.1**

COMBINATION WEIGHT	PSF
40%PVT	**5.4**
50%PVT	**5.7**
60%PVT	**6.1**
70%PVT	**6.4**
80%PVT	**6.7**
90%PVT	**7.0**
100%PVT	**7.3**

NOTE:
APPROX 32 PANELS PER 10x10' SQUARE

PermaTherm
Insulation Innovation

269 Industrial Park Rd.
Monticello, GA 31064
[p] (706) 468-7500
[f] (706) 468-7510
[e] info@permatherm.net

EPS Insulated Panels

Maximum Spans for Uniform Loads
(Units in Feet for 26-Gauge Steel Panel Skins)

Core Thickness	Total Uniform Load (lb/sq ft)						
	5	10	20	30	40	50	60
2 inch	18	13	9	7	6	5	3
3 inch	22	16	10	9	6	5	4
4 inch	25	18	13	10	8	7	6
5 inch	30	22	15	12	9	8	7
6 inch	32	23	16	13	10	9	8
8 inch	36	25	19	15	12	11	10
10 inch	41	29	20	17	14	12	11

**Uniform Load Spans based on the following: face wrinkling with a safety factor of 2; deflection of L/240 of span; or core shear with a safety factor of 5. Uniform Load Spans are rounded to the lower footage.*

** All values are calculated using core material of Type 1 (1 lb. Density) EPS Foam. Greater values can be reached with higher density foam which is available.*

Other Guidelines
PermaTherm Architectural Insulating Panels are designed to carry specified total loads, with maximum computed buckling stress not to exceed the maximum allowable buckling stress of the facings.

The inside face of all panels must be cut at girt attachments to avoid compression bucking of the exterior skin.

Wherever interior panel skins are extended to the outside (warm side) surface, a thermal break must be cut to avoid thermal conductivity.

Block panel packages should be stored above ground to keep out of water provide drainage.

Contents and logo are property of PermaTherm, Inc.
All rights reserved. Copyright 2010©

SMACNA **Downspout & Gutter Sizing Reports**

Project Name: APN544-23-042 Guesthouse Roof

Rainfall Intensity (in/hr): 3.7
Based on rainfall averages in San Francisco, CALIFORNIA (100 years)

Roof Rainfall Design Area (ft²): 773.32
* Area of Largest Roof Serving a Single Gutter System
Design Area manually entered by user

Gutter in Lineal Ft: 111
* Length at Largest Roof Serving a Single Gutter System

Gutter Length Serving Single DS (ft.): 37
*Assumption: downspouts are equally spaced
**Maximum gutter length to be served by a downspout is 50ft per SMACNA ASMM

M (depth to width ratio): 0.75

Min. Gutter Width (in.): 3 [Rectangular]

Min. Gutter Depth (in.): 2.5

# of Downspouts: 3

Min. Area per DS (in²): 0.78

Min. DS Size (in): 1.75 x 2.25 [Rectangular Corrugated]
*Per Table 1-3 on page 1.4 of SMACNA ASMM

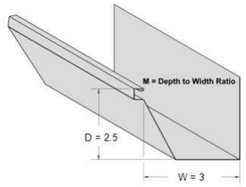

Calculations are derived using the 7th Edition of SMACNA's Architectural Sheet Metal Manual

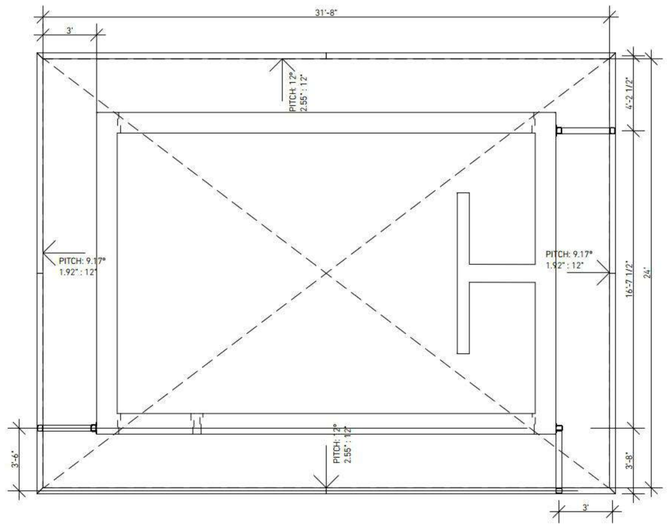

Guesthouse Roof details; rain gutters and downspouts. Scale: 1/4" = 1'

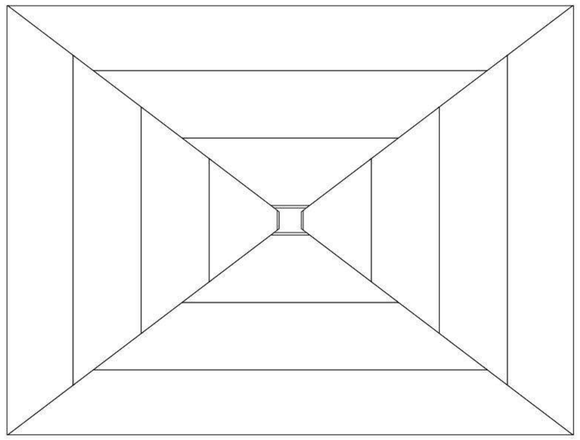

Guesthouse Roof: Metal SIP Panel Layout. Scale: 1/4" = 1'

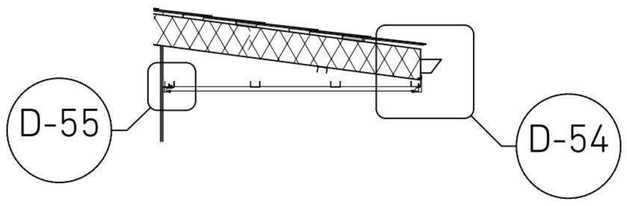

Eave detail

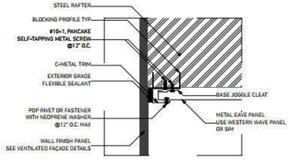

D-55 EAVE FINISH OUTER EDGE DETAIL

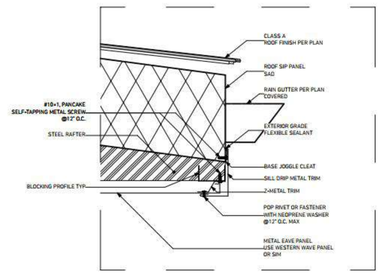

D-54 EAVE FINISH OUTER EDGE DETAIL

GIST RD. SFR 2

APN544-23-042; PROPOSED ADDRESS: 20599 GIST RD, LOS GATOS, CA 95033

REVISION HISTORY

S3DA Structural & Architectural Design
4196 Adams Ave. San Diego CA 92116
(619) 404-0220

Mr. Nader Moavenian
nader.m@s3da-design.com

REGISTERED PROFESSIONAL ENGINEER
BARRETT CROOKHAM
C 057199
Exp. 12.31.2021
CIVIL
STATE OF CALIFORNIA

2-11-2020

1. The contractor must check all dimensions on-site before commencing work

2. These drawings are to be read in conjunction with all relevant designer, engineer or specialist drawings and specifications

3. The contractor is responsible for providing all necessary temporary support to the building and any adjacent structures

COUNTY APPROVAL STAMP

REVISION DATE
01/02/21

DRAWING NAME
137 SFR2 Guest house. Roof plan

Drawing Scale

H2-A15

STRUCTURAL NOTES

GENERAL

1. All work shall be in conformance with the 2019 California Building Code (CBC) or newer code if applicable as adopted by the local governing agency, and any applicable local ordinances. Residential work shall be in conformance with the 2019 California Residential Code (CRC) or newer code if applicable.
2. All conditions and dimensions shown on the plans shall be verified by the Contractor, any discrepancies that require clarification or revisions shall be brought to the attention of the Architect/Engineer before commencing with the work.
3. Contractor shall provide the requirements of all structural detail callouts denoted as "TYPICAL" or "TYP" at specifically noted conditions and at all like conditions throughout the project, unless otherwise noted. All details on detail sheets titled as "TYPICAL", and not directly referenced on plans, shall be incorporated at occurring locations throughout the project. Requirements of details not denoted or titled as "TYPICAL" shall be provided at the specific location shown on the plan and adjacent areas as applicable. Requirements of details denoted as "SIMILAR" or "SIM" shall be provided with differences as indicated or implied on referenced details and plans.
4. Details may be depicted diagrammatically. For example, roof pitches, floor/roof/wall thicknesses, framing members, etc., may differ in scale from actual proposed conditions. Details shall be understood in context with other drawings conveying structural and architectural design intent.
5. Structural design or review of temporary shoring, additional reinforcing, bracing, formwork, scaffolding, erection methods, etc. required for proper construction of the project shall be the responsibility of the Contractor.
6. See Architectural Drawings for wall locations and dimensions, unless otherwise noted. Drawings shall not be scaled.
7. See Architectural Drawings for all flashing, waterproofing, finishes and venting requirements.
8. Refer to architectural plans for finish floor elevations, floor depressions, openings, slopes, drains, curbs, pads, embedded items, non-bearing partitions, stairs, etc. Refer to civil, mechanical and electrical plans for utilities, sleeves, pipes, ducts, equipment, etc.
9. Shop drawings are an aid for field placement and are superseded by the structural drawings. It shall be the responsibility of the General Contractor to make certain that all construction is in full agreement with the latest approved contract documents.
10. Dimensions, unless otherwise shown, are to centerline of columns and beams, or to the face of concrete surfaces and rough framing.
11. All referenced publications shall be the latest edition, unless otherwise noted. The structural drawings and specifications represent the finished structure, and, except where specifically shown, do not indicate the method or means of construction. The Contractor shall supervise and direct the work and shall be solely responsible for all construction means, methods, procedures, techniques, safety and sequence.

SPECIAL INSPECTION

1. GENERAL
   - A. In addition to the inspections required by Section 110 of the CBC, the Owner shall employ a Special Inspector during construction on the types of work indicated below. All special inspection shall be performed in accordance with Section 1704 of the CBC.
   - B. Inspections: Special inspections that are required by the building codes, local building departments, or these plans shall be performed by the firm noted in "SCOPE OF WORK" below.
2. SPECIAL INSPECTOR DUTIES
   - A. After due notice from the Contractor, provide qualified personnel as necessary.
   - B. Perform inspections as follows:
     - i. Perform specified reviews, inspections, sampling and testing of materials as indicated below.
     - ii. Verify conformance of all special inspected work with the approved plans.
     - iii. Verify that the work complies with specified standards and methods of construction.
     - iv. Ascertain compliance of materials with requirements of the approved plans.
   - C. Promptly notify Architect and Contractor of observation irregularities or deficiencies within one working day. If irregularities or deficiencies are uncorrected, the Special Inspector shall notify the Architect and the governing agency.
   - D. Promptly submit written report of each test and inspection with a copy each to the Architect, Engineer, Owner, Contractor, Governing Agency and other designated persons within three working days. Each report shall include:
     1. Date Issued.
     2. Project title and number.
     3. Testing laboratory name, address phone number.
     4. Name and signature of laboratory test or inspection.
     5. Date and time of sampling, test or inspection.
     6. Type of inspection or test.
     7. Location of sample or test in the project.
     8. Test results.

     Report shall indicate compliance or noncompliance with approved details and plans.
   - E. In addition to the required reports above, the Special Inspector shall submit a final signed report stating whether the work requiring special inspection was, to the best of his knowledge, in conformance with the approved plans and the applicable provisions of the California Building Code.
3. SCOPE OF WORK (By: Special Inspector Company/Firm)
   - A. Grading. Drainage. Excavation, and Fill By: Modern Technology Resources Inc. During earthwork excavations, drainage installation, grading and filling operations.
   - B. Foundation Excavations By: Modern Technology Resources Inc.
   - C. During excavation of drilled piers and/or footings by: Modern Technology Resources Inc.
   - D. Reinforcing Steel By: Owners' Testing Laboratory. Inspection of all reinforcing steel prior to closing of forms and prior to concrete delivery. EXCEPTION: Slab on grade.
   - E. Concrete By: Owners Testing Laboratory. During the taking of compression test specimens, slump test and placing of all reinforced concrete and pneumatically placed concrete. EXCEPTION: Non-structural slab-on-grade and spread footing foundations.
   - F. Post-Tensioned Slab By: Owners' Testing Laboratory. Inspection of all reinforcing steel, strand placement, and strand tensioning. (See above for concrete.)

POST-TENSIONED FOUNDATION / SITE WORK

1. GEOTECHNICAL REPORT/SITE WORK:
   - A. All site work, drainage systems, foundations and other soil considerations shall conform to the recommendations of the geotechnical report and any subsequent recommendations made by the Geotechnical Engineer of record.

GEOTECHNICAL ENGINEER: Modern Technology Resources, Inc.
TITLE: Aurum Residence
PROJECT #: 2019-507

   - B. Geotechnical Engineer shall review and approve site plans, foundation plans, and foundation details for conformance with design intent of geotechnical report prior to all site work. A copy of the approval letter shall be sent to both the Building Department and owner prior to foundation construction.
     - i. See geotechnical report for all grading, fill placement and building pad preparation requirements.
     - ii. Fill placement shall be observed by the Geotechnical Engineer.
     - iii. The Geotechnical Engineer shall prepare compaction test results of the compacted soil in order to provide a professional opinion as to conformance of the grading with the recommendations of the geotechnical report.
     - iv. Geotechnical Engineer shall review and approve pad preparation prior to placement of forms and reinforcing.
   - C. DESIGN PARAMETERS PER GEOTECHNICAL ENGINEER

Bearing capacity for mat foundation (dead + live): 2,000 psf
Total load for mat foundation, including wind and seismic: 3,000 psf.

2. MATERIALS
   - A. Concrete
     - i. Concrete for post-tensioned foundations shall have a minimum compressive strength of 4500 psi at 28 days. A minimum of three (3) test cylinders shall be taken to determine concrete compressive strength.
     - ii. Concrete for post-tensioned foundations shall be normal weight with 1-1/2" maximum size aggregate and a 4"±1" slump. Water to cement ratio shall not exceed 0.45
     - iii. Cement shall be Type I.
     - iv. Concrete for miscellaneous landings, stoops, driveways, etc. that are not part of the post—tensioned foundation shall have a minimum compressive strength of 3000 psi at 28 days and as specified in section 1904 of the CBC.
     - v. Calcium chloride, or any other corrosive additive, shall not be permitted in any concrete or grout.
     - vi. Concrete for 16.53' cantilevered concrete wall in garage shall have a minimum compressive strength of 5000 psi at 28 days. A minimum of three (3) test cylinders shall be taken to determine concrete compressive strength.
   - B. Reinforcing Steel
     - i. Reinforcing steel shall conform to ASTM A 615, (including supplement SI), grade 60 for #5 bars and larger and grade 40 for #4 bars and smaller. Steel shall be kept clean and free of rust scales.
     - ii. Reinforcing to be welded shall be ASTM A 706, grade 60
     - iii. Electrodes for welding reinforcing shall be SMAW: E90XX low hydrogen.
     - iv. Smooth dowels shall be new plain billet steel conforming to ASTM A 615 (including supplement SI), grade 40 for 1/2" diameter, grade 60 for 5/8" diameter and larger.
     - v. Welded wire fabric shall conform to ASTM A 185, and shall be lapped 9" minimum at splices.
   - C. Post-Tensioning Strands
     - i. Post-tensioning strands shall be seven-wire, low relaxation strand for pre-stressed concrete, manufactured in accordance with ASTM A 416 grade 270 KSI and free from corrosion. Strands shall have a minimum guaranteed ultimate tensile strength of 41,300 pounds and shall comply with the following:

a.	Nominal Diameter	1/2"
b.	Nominal Area	0.153 in^2
c.	Modulus of Elasticity	28,500 KSI
d.	Ultimate Strength	41.3 KIPS
e.	Maximum Temporary Force	33.0 KIPS
f.	Anchorage Force	28.9 KIPS
g.	Final Effective Pre-stress	26.8 KIPS

     - ii. Strands shall be coated with rust preventive grease and enclosed in a seamless extruded plastic sheathing. Torn or damaged sheathing shall be taped before concrete pouring. All exposed tendons shall be taped.
   - D. Post-Tensioning Anchorages

i.Post-tensioning anchorages shall meet the minimum requirements set forth in the "Building Code Requirements for Structural Concrete" ACI 318, latest adopted edition, Chapter 18. Contractor to provide Manufacturer's name and latest ICC report.

ii.Fixed-end (i.e. "dead-end") anchorages shall be pre-attached to strands by product manufacturer.

3. PLACING OF TENDONS AND ANCHORAGES
   - A. Stressing ends and dead ends of tendons may be reversed from those shown on the plans.
   - B. Mark location of the center of tendons on edge form based on the FOUNDATION PLAN and drill a 3/4" diameter hole in edge form at the stressing end locations, half the slab thickness down from the top of slab elevation, unless otherwise noted.
   - C. Secure all stressing end anchorage castings and pocket formers to the perimeter form before uncoiling of the strand.
   - D. Lay all tendons in one direction, and then lay all tendons in the perpendicular direction. Referring to the plan, select individual color-coded coils of tendons and unroll them in place, beginning at the fixed-end, if such fixed-end exists. At least 16" of strand must extend beyond the edge form at each stressing end. Care shall be exercised when tied tendons are uncoiled to not damage coils or cause injury to workers.
   - E. Affix fixed-end anchors to edge forms with two 20d ring shank nails, maintaining 1-1/2" clear from outside face of anchor to inside face of edge form to provide adequate concrete coverage of fixed-end anchor. Face of anchor shall be parallel to face of slab edge surface, unless tendon layout indicates otherwise. At the fixed-end, the strand should have approximately 3/4" of concrete coverage. The stressing ends are left draped over the top edge of side forms during nailing of the dead ends.
   - F. Securely nail the stressing end anchors with pocket formers to the edge form with two 20d ring shank nails such that pocket formers seat tight and flush to the edge form and the face of anchor is parallel to outside face of slab edge.
   - G. At stressing ends, remove tendon sheathing to approximately 6" inside the edge form. No more than 1" of bare strand shall be exposed behind the anchor. Do not remove grease. Slide end of strand through the hole in the anchor, pocket former and edge form.
   - H. Fixed-ends that occur at "floating" forms (for change of levels in slab heights, or other cases) shall not be attached to "floating" forms but instead held securely in place by attachment to steel reinforcing bars.
   - I. At conditions where both ends of tendon are stressing-ends, 16" length of cable shall be left exposed outside of each edge form to allow for proper attachment and operation of jacks.
   - J. Straighten tendons, curving them smoothly around holes or obstructions per typical details. Avoid sharp bends and transitions.
   - K. Place plastic support chairs at cable intersections such that tendons are located at mid-depth of slab. Place additional plastic chair supports mid—way between intersections where the spacing between intersections exceeds 4'-6" (3'-0" where 3/8" diameter strand used).
   - L. Check strands for tears in plastic sheathing and tape all tears.
   - M. Tendon supports shall have adequate bearing surface to maintain position during placement of concrete.
4. PLACING OF REINFORCING AND CONCRETE
   - A. Reinforcing bars shall be in lengths as long as practicable. Reinforcing bars requiring bending in the field shall be "cold bent" with proper radius per relevant detail. At corners and intersections bars shall return a minimum of 18". Provide minimum laps at all reinforcing bar splices per detail.
   - B. Minimum reinforcing steel cover requirements:
     - i. Cast against and exposed to earth: 3"
     - ii. Formed surfaces: 2"
   - C. Contractor shall verify all locations of bolts, hold down anchors, etc., with architectural and structural plans prior to commencing work.
   - D. Reinforcing, anchor bolts and inserts shall be rigidly held in place prior to placing concrete.
   - E. All concrete shall be poured monolithically as shown on drawings, unless otherwise noted, and thoroughly mechanically vibrated. Consolidation of concrete at anchorages is critical.

F. CURING

i. Exposed surfaces of concrete shall be properly cured in a moist condition at a temperature above 50 degrees Fahrenheit. Exposed concrete shall be thoroughly wetted as necessary to maintain surface in a moist condition.

ii. For curing of concrete cast and finished flat, cure by one of the following methods for a minimum of seven (7) days U.O.N.
   1. Burlap: Cover concrete with wet burlap as soon as it can be placed without marking the surface. Keep the burlap continuously wet and in place during the curing period
   2. Cure/Sealer: Verify that other finishes will not be affected by cure/sealer compound. Cure/sealer shall be a high-solids type with a maximum moisture loss of 0.55kg/m^2 at coverage of 200 ft^2/gal. Upon completion of finishing, apply an approved cure/sealer to flatwork per manufacturer's instructions.

   - G. Where sand layer over vapor barrier is specified on plans, Contractor shall dampen the sand just prior to concrete placement.
5. PREPARATION FOR STRESSING
   - A. Remove pocket former. Check inside each pocket hole, making certain that the anchorage cavity is clear. If concrete residue, foreign matter, or a film of cement paste has intruded, remove it completely.
   - B. Outside face of slab edge shall be properly cleaned for proper movement and fitting of hydraulic jack.
   - C. Anchorage cavity and surface for jack shall be examined for any honeycombing, cracking, voids or any other abnormalities. If any such conditions are found, stressing shall not commence until repairs have been properly completed.
   - D. Confirm that tendons are perpendicular to the slab edge face and anchorage surface is parallel to slab edge face (unless using an angled anchorage as directed by plan). Do not stress concrete until any problems are remedied.
   - E. Clean tendon tails of excess corrosion inhibiting coating, dirt, sand, or concrete slurry to prepare tendon tail to be gripped and marked by the jack.
   - F. With a hand tool, seat proper sized wedge halves on clean tendon tail. The light coating of oil on wedges shall not be removed. Orient wedge halves to align properly with the seating plunger of the stressing jack to properly engage both wedge halves during stressing operation.
   - G. Place an obvious and accurate mark, by marker or spray paint, on the strand at a constant reference dimension from the slab edge. If stressing is to occur at both ends of tendon, both ends shall be marked before stressing occurs.
6. STRESSING OF TENDONS

A. Tendon stressing shall occur as soon as possible after the concrete has reached a compressive strength of 3000 psi. Stressing should occur between three and ten days after concrete placement unless sufficient strength is not met.

B. The stressing of tendons is a potentially dangerous operation. The stressing operator must be a person qualified in stressing operations and must exercise careful checking and rigid control of all operations. Inexperience, improper procedures and poor quality control may result in life safety hazards.

C. Do not stand behind or over the equipment during stressing operations. Operators shall utilize a remote switch for jack operation, located at a safe distance from equipment.

D. Equipment utilized for stressing tendons shall be recognized by tendon and anchorage manufacturer as acceptable equipment. Hydraulic jacks shall be equipped with accurate, calibrated hydraulic pressure gauges and a calibration chart shall accompany each jack. Gauges shall be clearly visible by and face the jack operator. Do not read gauges from the side or obliquely.

E. Inspection personnel shall be on site to measure elongations concurrently with stressing operations. Actual elongation measurements shall be taken during stressing operation and measurements shall be compared to expected calculated elongations. Elongation measurements shall be made to an accuracy of 1/8". If variations greater than 10% between actual and expected elongations are encountered, stressing shall cease until the cause of the discrepancy is determined. On double end-stressing tendons add the elongation of end together to obtain the total elongation. Tendons less than 20 feet in length result in small calculated elongations. For such lengths, the ten percent tolerance may be too stringent due to inaccuracies in the marking and measuring process.

F. Proceed with jack attachment, startup procedures, and jack operation according to the jack manufacturer's instructions. When proper pressure has been achieved, the seating plunger is engaged, and the jack will start to retract.

G. Stress strand to 33 KIPS.

H. Just before the jack is fully retracted, stop the pump and switch the valve back to the stressing position. The seating plunger should retract. Stop the jack before the jack is fully retracted to avoid excessive pressure buildup in the jack after it has completely returned. This excessive pressure buildup can cause premature failure of the jack seals, hoses and fittings.

I. Slide the jack forward to disengage the jack grippers and remove the jack from the tendon tail.

J. If the calculated elongation is larger than the stroke of the jack, additional pulls will be required. Care should be taken not to over pressure the jack after the cylinder is completely extended. When using an 8" stroke jack, try to leave approximately 5" for the final pull. This will help keep the pressure as low as possible on the anchor wedges during the initial strokes.

K. After tendon stressing, the adjacent concrete shall be marked to indicate the tendon has been tensioned.

L. Stressing records shall be kept on the project and shall show the gauge pressure used and the elongation achieved for each tendon that is stressed.

7. TENDON FINISHING

A. Proper protection of the entire post-tensioning system is important to provide long-term performance and durability of the foundation system. The pocket former recesses shall be properly sealed to protect the tendon tail and anchorage.

B. The tendon tails shall be cut as soon as possible after stressing, but only after approval has been received from the Engineer or Special Inspector for the submitted stressing records report.

C. The tendon tail shall be cut back from the face of the slab edge a distance of 1 inch. Tails may be cut with an oxyacetylene torch, an abrasive wheel, gas or electric saw, or hydraulic shears. If flame cutting is utilized, care shall be taken to not apply heat directly to the wedges.

D. If an approved plastic protection cap and sealer is placed over the cut tendon tail, the grout coverage may be reduced to 1 /8" over the cap. The cap shall be of sufficient length to provide a distance of one inch minimally from the outside face of the slab edge surface to any exposed surface of the tendon cable not surrounded by the protection cap.

E. The pocket recesses shall be cleaned of foreign or loose material that would inhibit a good bond between the concrete and the grout. A bonding agent can be used to enhance the bond of the grout to the concrete.

F. The pocket former recesses shall be filled with grout to eliminate all voids and finished to match surrounding slab edge, immediately after the tendon tails have been cut.

G. The grout material shall be a non-shrink grout and attain the same minimum compressive strength as the concrete slab. Under no circumstances shall the grout used for filling the recesses contain chlorides or other chemicals known to be deleterious to pre-stressing steel. If an encapsulated system is used, follow the post-tensioning material supplier's recommendations for cutting and grouting.

ABBREVIATIONS

∠ or L.	Angle
@	At
A.B.	Anchor Bolt(s)
ABV	Above
AC	Asphaltic Concrete
ADDL	Additional
ADJ	Adjacent
AFF	Above Finish Floor
ALT	Alternate
APA	American Plywood Association
APRX	Approximate
ASTM	American Society for Testing and Materials
A.T.R.	All-Threaded Rod
AYC	Alaska Yellow Cedar
BFF	Below Finish Floor
BLDG	Building
BLK	Block or Blocking
BLW	Below
BM	Beam
BOT	Bottom
BRG	Bearing
BTWN	Between
CANT	Cantilever
CBC	California Building Code
C.J.	Control Joint
CL or ℄	Centerline
CLG	Ceiling
CLR	Clear
C.M.U.	Concrete Masonry Unit
COL	Column
COLL	Collector
COMB	Combination
CONC	Concrete
COND	Condition
CONN	Connection
CONST	Construction
CONT	Continuous
C.P.	Complete Penetration
CSK	Countersink
d	Penny (nail size)
DBL	Double
DET	Detail
D.F.	Douglas Fir
DIA or ⌀	Diameter
DIAG	Diagonal
DIM	Dimension
DL	Dead Load
D.T.	Drag Truss
DWG	Drawing
(E)	Existing
EA	Each
E.B.	Expansion Bolt
E.E.	Each End
E.F.	Each Face
ELEC	Electrical
EL or ELEV	Elevation
Δ or ∂	Elongation
EMB	Embed or embedment
E.N.	Edge Nail
ENGR	Engineer
E.O.R.	Engineer of Record
EQ	Equal or Equivalent
E.S.	Each Side
E.W.	Each Way
EXT	Exterior
FDN	Foundation
FLR	Floor
FF EL	Finish Floor Elevation
FIN GR	Finish Grade
FHMS	Flat Head Machine Screw
FHWS	Flat Head Wood Screw
F.J.	Floor Joist
F.N.	Face Nail
F.O.C.	Face of Concrete
F.O.P.	Face of Post
F.O.S.	Face of Stud
F.O.H.C.	Free of Heart Center
FRMG	Framing
F.S.	Far-Side
FT	Foot / Feet
FTG	Footing
GA	Gauge or Gage
GALV	Galvanized
F. I.	Galvanized Iron
GLB	Glu-Laminated Beam
GR.BM.	Grade Beam
G.T.	Girder Truss
GYP BD	Gypsum Board
H.D.G.	Hot-Dipped Galvanized
HDR	Header
HGR	Hanger
HORIZ	Horizontal
H. S.	High Strength
HSS	Hollow Structural Section
HT	Height
IBC	International Building Code
ICC	International Code Council
I.C.F.	Insulated Concrete Form(s)
I.D.	Inside Diameter
I.F.	Inside Face
INFO	Information
INT	Interior
JST	Joist
JT	Joint
K	KIP(S) (1000 lbs)
KD	Kiln Dried
K.P.	King Post
LBS or #	Pounds
LG	Long
L. L.	Live Load
L.L.H.	Long Leg Horizontal
L. L.V.	Long Leg Vertical
LOC	Location(s)
MAX	Maximum
M.B.	Machine Bolt(s)
MBM	Metal Building Manufacturer
MFR	Manufacturer (Manufactured)
MIW	Malleable Iron Washer
MIN	Minimum
MISC	Miscellaneous
MTL	Metal
(N)	New
N/A	Not Applicable
N.I.C.	Not In Contract
NO. or #	Number
N.S.	Non-shrink (or Near—Side)
N.T.S.	Not to Scale
O/	Over (On)
O.C.	On Center
O.D.	Outside Diameter
O.F.	Outside Face
O.H.	Opposite Hand
OPNG	Opening
OPP	Opposite
OPT	Optional
O.S.B.	Oriented Strand Board
PHSMS	Pan Head Sheet Metal Screw
PARL	Parallel
PERP	Perpendicular
P.D.F.	Powder Driven Fastener
PERF	Perforated
PL	Plate
PLY	Plywood
P.P.	Partial Penetration
P.L.F.	Pounds Per Lineal Foot
P.S.I.	Pounds Per Square Inch
P.S.F.	Pounds Per Square Foot
P.T.	Preservative Treated
P-T	Post-Tension(ed) (ing)
(#)	Quantity (Number of items)
R	Radius
REINF	Reinforcing
RET	Retaining
REQD	Required
REV	Revision
R.O.	Rough Opening
RHMS	Round Head Machine Screw
RHWS	Round Head Wood Screw
RWD	Redwood
S.A.D.	See Architectural Drawings
S.C.D.	See Civil Drawings
SCHED	Schedule
S.S.D.	See Structural Drawings
SCL	Structural Composite Lumber
SCN	See Carpentry Notes
SHT	Sheet
SHTG	Sheathing
SMF	Sheet Metal Flashing
SIM	Similar
SP	Space(s)
SPECS	Specifications
SQ	Square
S.S.	Select Structural
STAG	Staggered
STD	Standard
STIF	Stiffener
SST	Stainless Steel
STL	Steel
STRL	Structural
SIP	Structural Insulated Panel
S.S.W.	Structural Sheathed Wall
SYMM	Symmetrical
T&B	Top & Bottom
T&G	Tongue & Groove
THK	Thick or Thickness
THRD	Threaded
T.N.	Toenail
T-U	Tilt-Up (Concrete Panel)
TYP	Typical
U.O.N.	Unless Otherwise Noted
U.R.M.	Unreinforced Masonry
VERT	Vertical
V.I.F.	Verify In Field
W/	With
WD	Wood
WP	Waterproof
W.P.T.	Work Point
WT	Weight

GIST RD. SFR 2

APN544-23-042; PROPOSED ADDRESS: 20599 GIST RD, LOS GATOS, CA 95033

REVISION HISTORY

S3DA Structural & Architectural Design
4196 Adams Ave. San Diego CA 92116
(619) 404-0220

Mr. Nader Moavenian
nader.m@s3da-design.com

REGISTERED PROFESSIONAL ENGINEER
BARRETT CROOK
C 057199
Exp. 12-31-2021
CIVIL
STATE OF CALIFORNIA
2-11-2020

1. The contractor must check all dimensions on-site before commencing work

2. These drawings are to be read in conjunction with all relevant designer, engineer or specialist drawings and specifications

3. The contractor is responsible for providing all necessary temporary support to the building and any adjacent structures

COUNTY APPROVAL STAMP

REVISION DATE
01/02/21

DRAWING NAME
137 SFR2
Structural notes

Drawing Scale

H2-S1

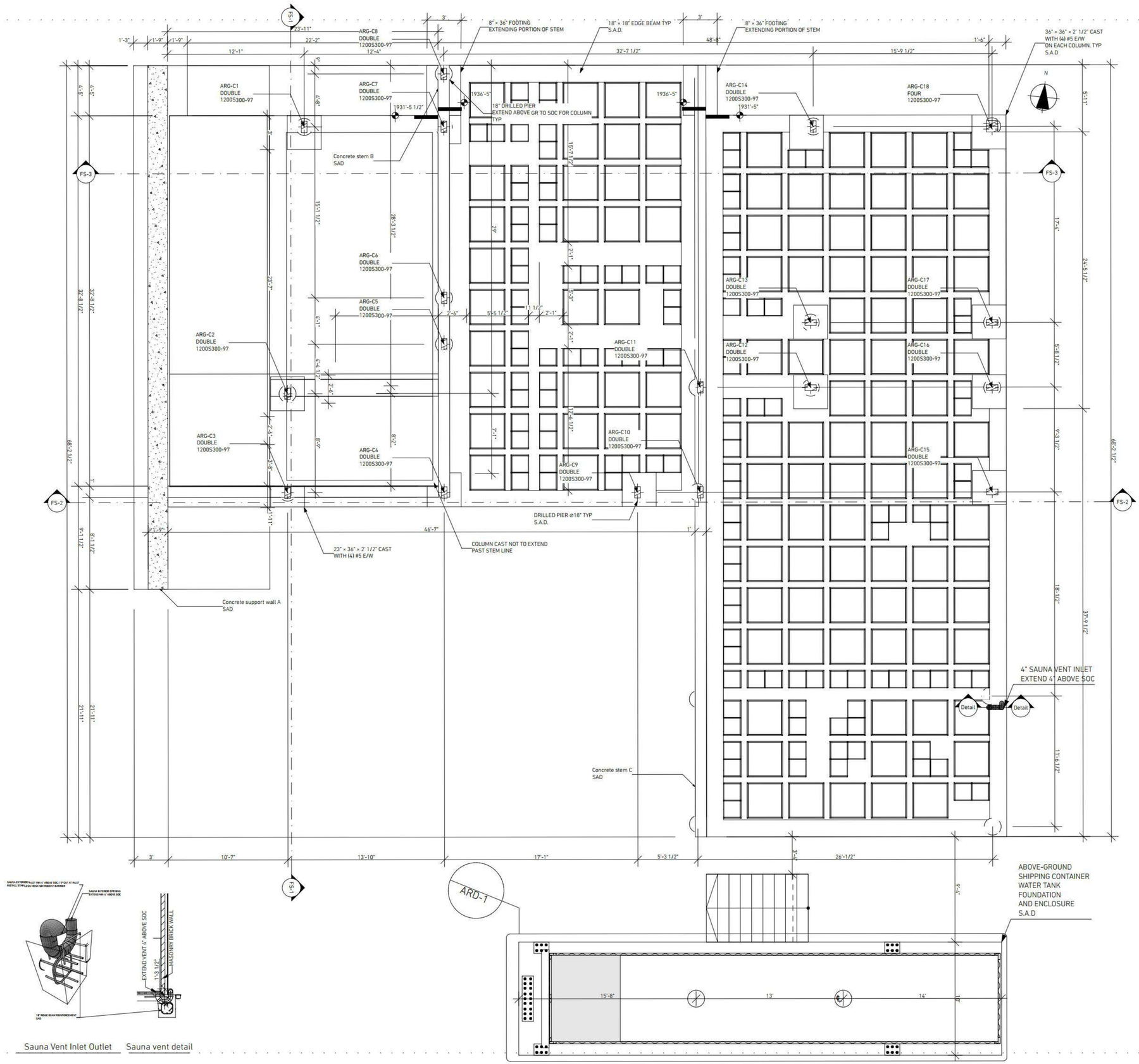

GIST RD. SFR 2

APN544-23-042; PROPOSED ADDRESS: 20599

GIST RD, LOS GATOS, CA 95033

REVISION HISTORY

S3DA Structural & Architectural Design
4196 Adams Ave. San Diego CA 92116
(619) 404-0220

Mr. Nader Moavenian
nader.m@s3da-design.com

REGISTERED PROFESSIONAL ENGINEER
GARRETT CROOK
C 057186
Exp. 12-31-2021
CIVIL
STATE OF CALIFORNIA

2-11-2020

1. The contractor must check all dimensions on-site before commencing work

2. These drawings are to be read in conjunction with all relevant designer, engineer or specialist drawings and specifications

3. The contractor is responsible for providing all necessary temporary support to the building and any adjacent structures

COUNTY APPROVAL STAMP

REVISION DATE
01/02/21

DRAWING NAME
138 SFR2 Slab dimensions

Drawing Scale
1/4" = 1'-0"

H2-S2

POST-TENSIONED TENDON ELONGATION VALUES

Tendon Length (ft)	Elongation (fractional in)	Elongation (decimal in)
10	0-3/4 in.	0.768
11	0-7/8 in.	0.845
12	0-7/8 in.	0.922
13	1 in.	0.999
14	1-1/8 in.	1.076
15	1-1/8 in.	1.153
16	1-1/4 in.	1.229
17	1-1/4 in.	1.306
18	1-3/8 in.	1.383
19	1-1/2 in.	1.46
20	1- 1/2 in.	1.537
21	1-5/8 in.	1.614
22	1-3/4 in.	1.69
23	1-3/4 in.	1.767
24	1-7/8 in.	1.844
25	1-7/8 in.	1.921
26	2 in.	1.998
27	2-1/8 in.	2.075
28	2-1/8 in.	2.151
29	2-1/4 in.	2.228
30	2-1/4 in.	2.305
31	2-3/8 in.	2.382
32	2-1/2 in.	2.459
33	2-1/2 in.	2.536
34	2-5/8 in.	2.612
35	2-3/4 in.	2.689
36	2-3/4 in.	2.766
37	2-7/8 in.	2.843
38	2-7/8 in.	2.92
39	3 in.	2.997
40	3-1/8 in.	3.073
41	3-1/8 in.	3.15
42	3-1/4 in.	3.227
43	3-1/4 in.	3.304
44	3-3/8 in.	3.381
45	3-1/2 in.	3.458
46	3-1/2 in.	3.534
47	3-5/8 in.	3.611
48	3-3/4 in.	3.688
49	3-3/4 in.	3.765
50	3-7/8 in.	3.842
51	3-7/8 in.	3.919
52	4 in.	3.995
53	4-1/8 in.	4.072
54	4-1/8 in.	4.149
55	4-1/4 in.	4.226
56	4-1/4 in.	4.303
57	4-3/8 in.	4.38
58	4-1/2 in.	4.456
59	4-1/2 in.	4.533
60	4-5/8 in.	4.61
61	4-5/8 in.	4.687
62	4-3/4 in.	4.764
63	4-7/8 in.	4.841
64	4-7/8 in.	4.918
65	5 in.	4.994
66	5-1/8 in.	5.071
67	5-1/8 in.	5.148
68	5-1/4 in.	5.225
69	5-1/4 in.	5.302
70	5-3/8 in.	5.379
71	5-1/2 in.	5.455
72	5-1/2 in.	5.532
73	5-5/8 in.	5.609
74	5-5/8 in.	5.686
75	5-3/4 in.	5.763
76	5-7/8 in.	5.84
77	5-7/8 in.	5.916
78	6 in.	5.993
79	6-1/8 in.	6.07
80	6-1/8 in.	6.147
81	6-1/4 in.	6.224
82	6-1/4 in.	6.301
83	6-3/8 in.	6.377
84	6-1/2 in.	6.454
85	6-1/2 in.	6.531
86	6-5/8 in.	6.608
87	6-5/8 in.	6.685
88	6-3/4 in.	6.762
89	6-7/8 in.	6.838
90	6-7/8 in.	6.915
91	7 in.	6.992
92	7-1/8 in.	7.069
93	7-1/8 in.	7.146
94	7-1/4 in.	7.223
95	7-1/4 in.	7.299
96	7-3/8 in.	7.376
97	7-1/2 in.	7.453
98	7-1/2 in.	7.53
99	7-5/8 in.	7.607
100	7-5/8 in.	7.684

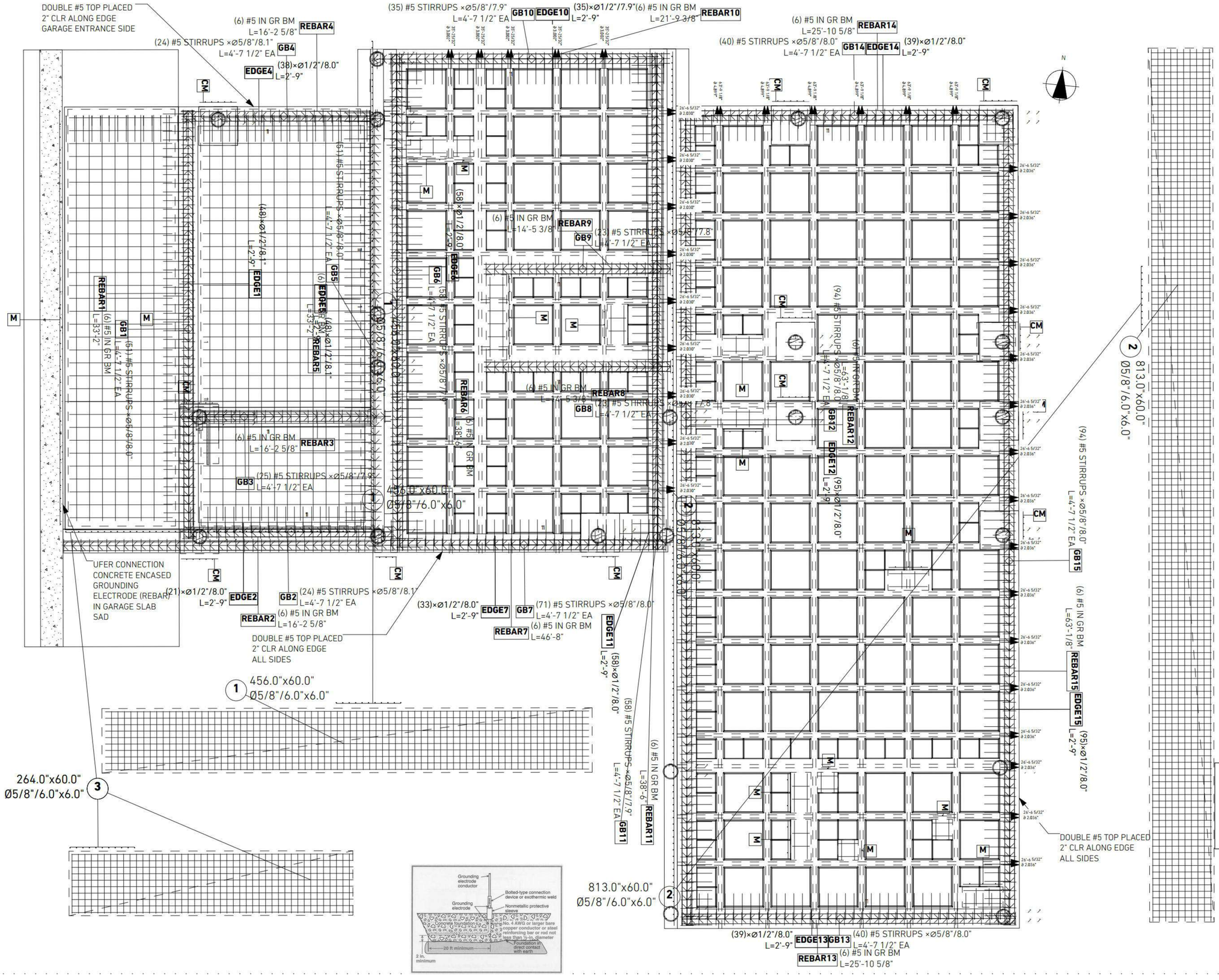

GIST RD. SFR 2

APN544-23-042; PROPOSED ADDRESS: 20599

GIST RD, LOS GATOS, CA 95033

REVISION HISTORY

S3DA Structural & Architectural Design
4196 Adams Ave. San Diego CA 92116
(619) 404-0220

Mr. Nader Moavenian
nader.m@s3da-design.com

REGISTERED PROFESSIONAL ENGINEER
BARRETT CROOK
C 057199
Exp. 12.31.2021
CIVIL
STATE OF CALIFORNIA

2-11-2020

1. The contractor must check all dimensions on-site before commencing work
2. These drawings are to be read in conjunction with all relevant designer, engineer or specialist drawings and specifications
3. The contractor is responsible for providing all necessary temporary support to the building and any adjacent structures

COUNTY APPROVAL STAMP

REVISION DATE
01/02/21

DRAWING NAME
139 SFR2 Foundation reinforcement details

1:40

H2-S3

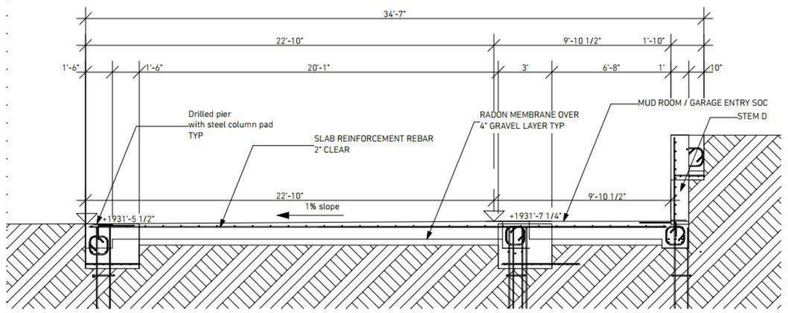

FS-1 1/4" = 1'-0"

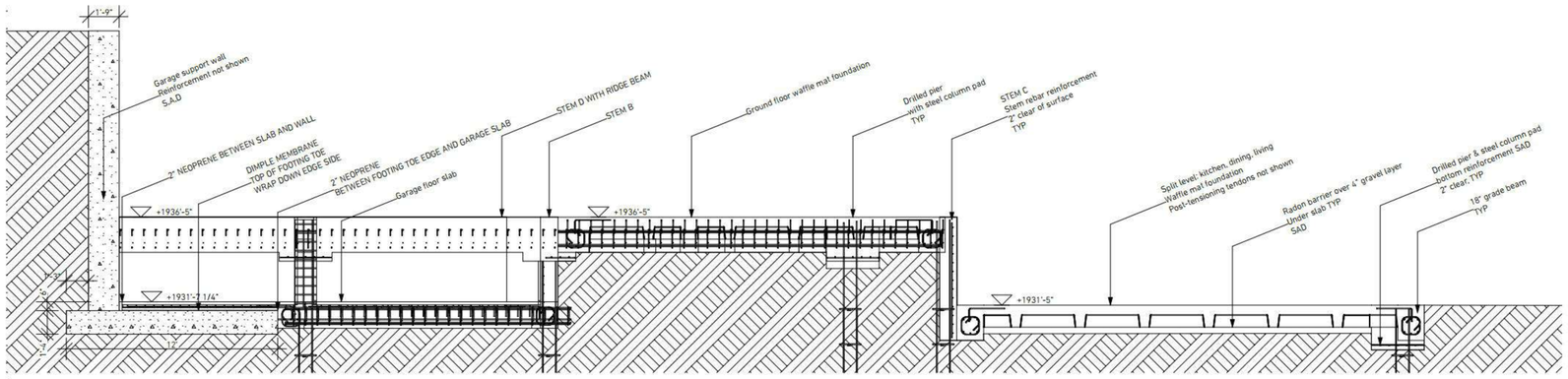

FS-2 1/4" = 1'-0"

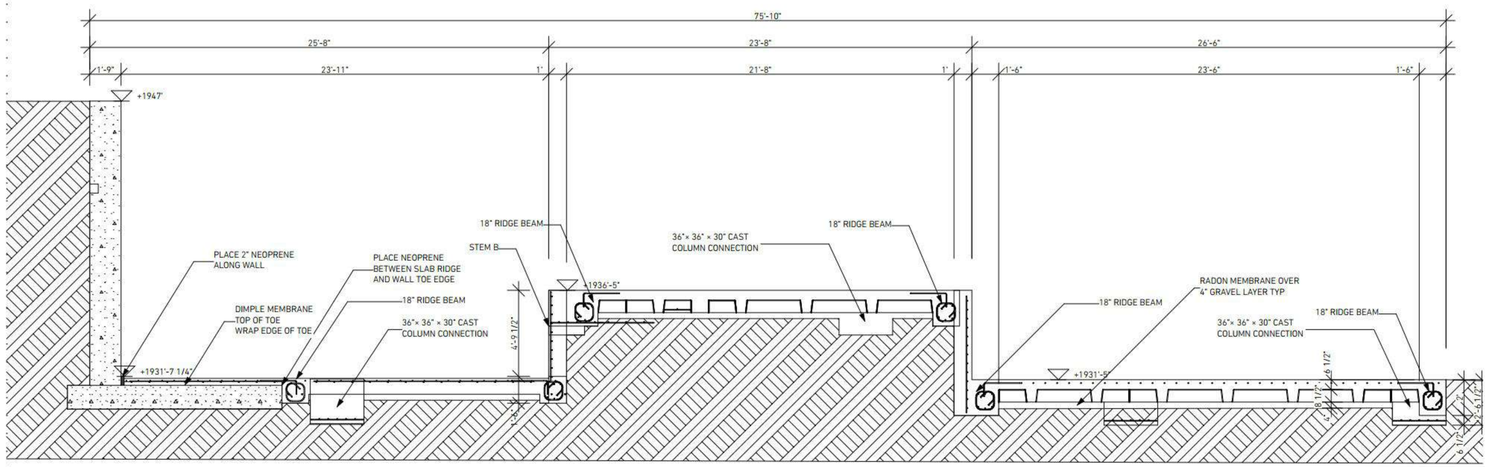

FS-3 1/4" = 1'-0"

GIST RD. SFR 2

APN544-23-042; PROPOSED ADDRESS: 20599
GIST RD, LOS GATOS, CA 95033

REVISION HISTORY

S3DA Structural & Architectural Design
4196 Adams Ave. San Diego CA 92116
(619) 404-0220

Mr. Nader Moavenian
nader.m@s3da-design.com

REGISTERED PROFESSIONAL ENGINEER
BARRETT CROOK
C 057196
Exp. 12-31-202
CIVIL
STATE OF CALIFORNIA
2-11-2020

1. The contractor must check all dimensions on-site before commencing work

2. These drawings are to be read in conjunction with all relevant designer, engineer or specialist drawings and specifications

3. The contractor is responsible for providing all necessary temporary support to the building and any adjacent structures

COUNTY APPROVAL STAMP

REVISION DATE
01/02/21

DRAWING NAME
140 SFR2 Foundation sections

Drawing Scale
1/4" = 1'-0"

H2-S4

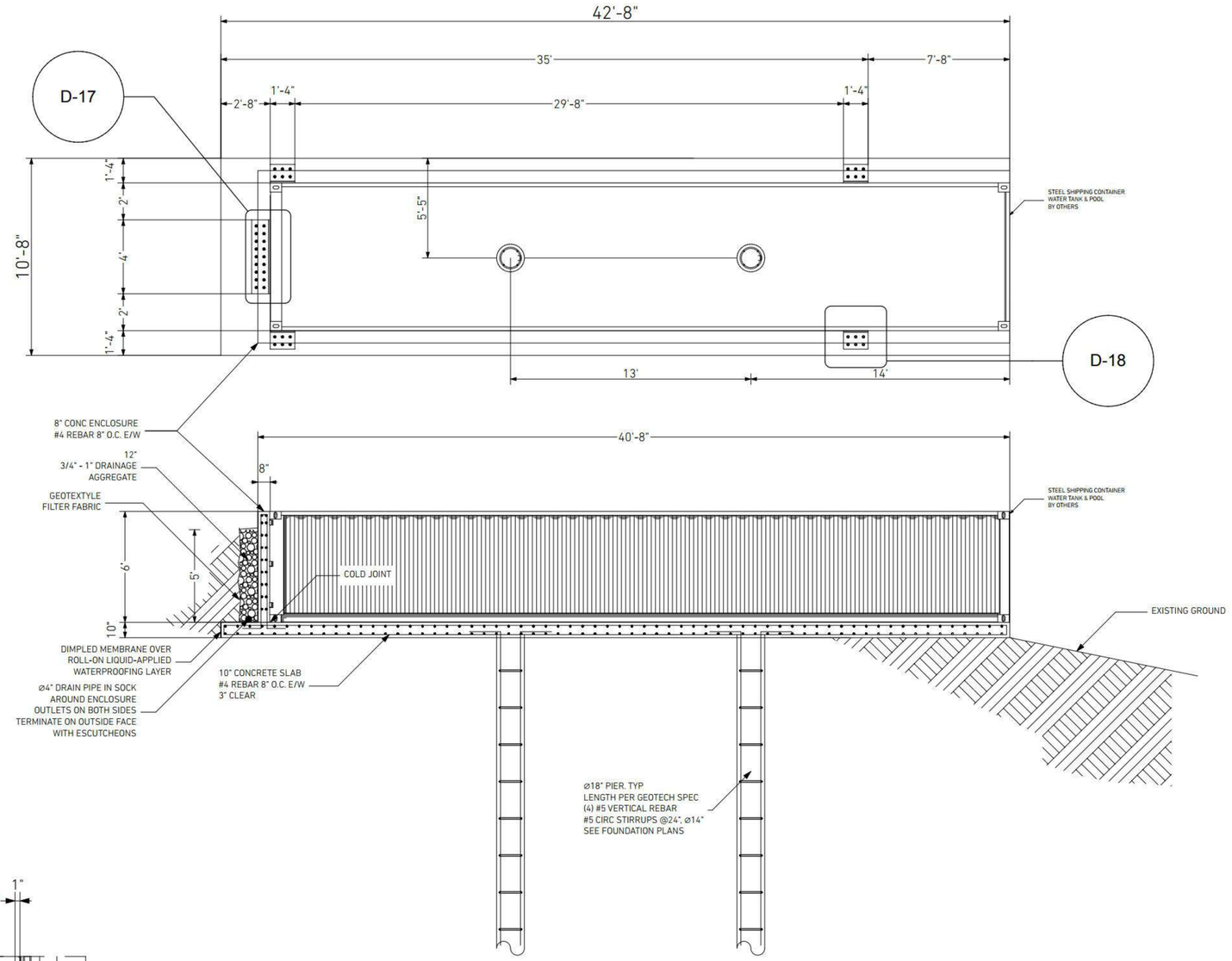

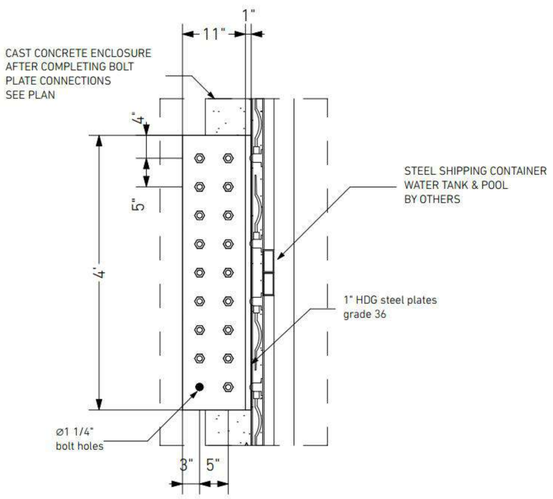

D-17 STEEL CONTAINER CONNECTION: REAR BOLT PLATE DIMENSIONS 1:12.50

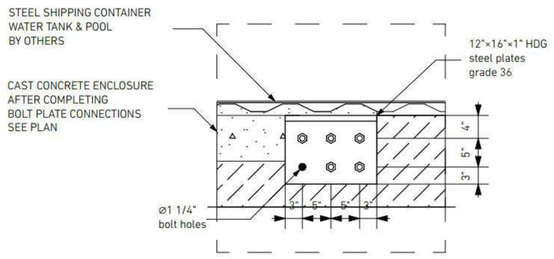

D-18 STEEL CONTAINER CONNECTION: SIDE BOLT PLATE DIMENSIONS 1:12.50

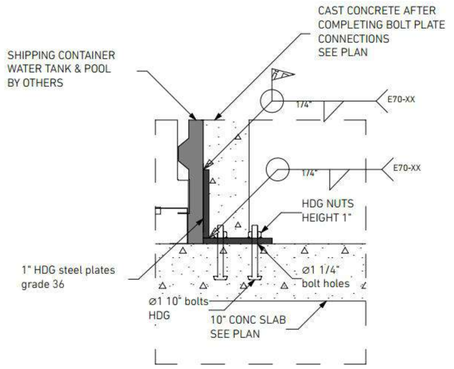

D-19 STEEL CONTAINER CONNECTION: WELDED BOLT PLATE 1:12.50

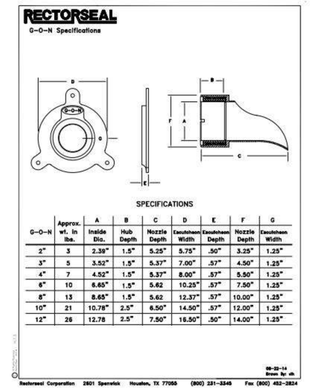
RECTORSEAL
G-O-N Specifications

SPECIFICATIONS

G-O-N	Approx. wt. in lbs.	A Inside Dia.	B Hub Depth	C Nozzle Depth	D Escutcheon Width	E Escutcheon Depth	F Nozzle Depth	G Escutcheon Width
3"	3	2.39"	1.5"	5.25"	5.75"	.50"	3.25"	1.25"
3"	5	3.52"	1.5"	5.37"	7.00"	.57"	4.50"	1.25"
4"	7	4.52"	1.5"	5.37"	8.00"	.57"	5.50"	1.25"
6"	10	6.65"	1.5"	5.62	10.25"	.57"	7.50"	1.25"
8"	13	8.65"	1.5"	5.62	12.37"	.57"	10.00"	1.25"
10"	21	10.78"	2.5"	8.50"	14.50"	.57"	12.00"	1.25"
12"	26	12.78	2.5"	7.50"	16.50"	.50"	14.00"	1.25"

Rectorseal Corporation 2601 Spenwick Houston, TX 77055 (800) 231-3345 Fax (800) 452-2624

4" DRAIN GLUE-ON NOZZLE & ESCUTCHEON

GIST RD. SFR 2

APN544-23-042; PROPOSED ADDRESS: 20599
GIST RD, LOS GATOS, CA 95033

REVISION HISTORY

S3DA Structural & Architectural Design
4196 Adams Ave. San Diego CA 92116
(619) 404-0220

Mr. Nader Moavenian
nader.m@s3da-design.com

REGISTERED PROFESSIONAL ENGINEER
BARRETT CROOK
C 057199
Exp. 12-31-2021
CIVIL
STATE OF CALIFORNIA
2-11-2020

1. The contractor must check all dimensions on-site before commencing work
2. These drawings are to be read in conjunction with all relevant designer, engineer or specialist drawings and specifications
3. The contractor is responsible for providing all necessary temporary support to the building and any adjacent structures

COUNTY APPROVAL STAMP

REVISION DATE
01/02/21

DRAWING NAME
141 SFR2
Shipping container water tank foundation
1:40

H2-S6

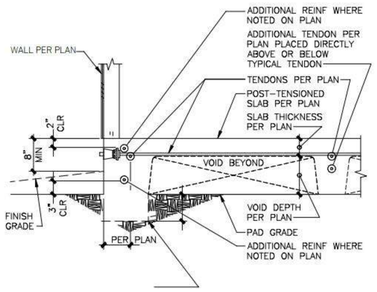

1 TYPICAL PERIMETER

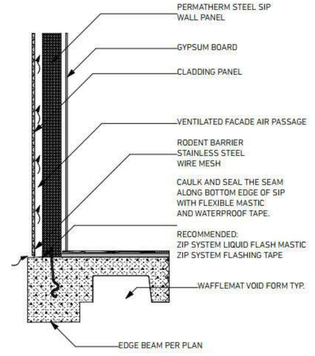

2 WALL SECTION DETAILS

ANCHORS SHALL BE ONE OF THE FOLLOWING TYPES	
MFR & MODEL	"Y"
"HILTI" KWIK-BOLT-TZ	3 1/8"
"HILTI" KH-EZ	3 1/8"
"SIMPSON" STRONG-BOLT	3 1/8"
"SIMPSON" TITEN-HD	3 1/8"

AT STRUCTURAL SHEATHED WALLS:
TRACK SILL WITH 5/8"Ø A.B (WITH 7" MIN EMBEDMENT), 3/4"ø EPOXY-SET THREADED ROD PER DETAIL 22/SD2, OR 3/8"ø ANCHORS PER SCHEDULE @ 6'-0"O.C. FOR ONE STORY AND 4'-0"O.C. FOR TWO STORY TYP U.O.N. – PROVIDE STANDARD CUT WASHER OVER BPS3/8-3 AT EACH BOLT – FOR ADDITIONAL REQUIREMENTS SEE DETAIL 5/SD2
AT NON-SHEATHED WALLS:
TRACK SILL WITH 0.145"ø×3" MIN POWDER DRIVEN FASTENERS WITH 3/4"ø x 16 GA OR EQUIVALENT SQ STL WASHER – PLACE PINS AT 6" FROM EACH END OF SILL & @ 32"O.C. MAX TYP U.O.N.

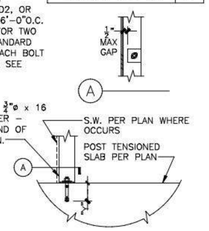

3 TYPICAL INTERIOR WALL

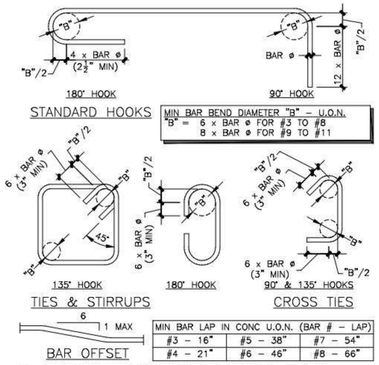

MIN BAR LAP IN CONC U.O.N. (BAR # – LAP)		
#3 – 16"	#5 – 38"	#7 – 54"
#4 – 21"	#6 – 46"	#8 – 66"

4 TYPICAL REINFORCING STEEL DATA

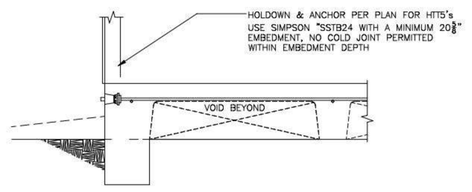

5 TYPICAL PERIMETER AT HOLDOWN

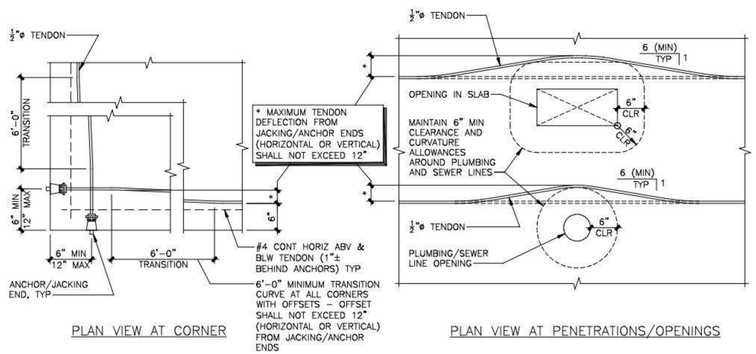

8 TYPICAL TENDON LAYOUT AT CORNERS AND PENETRATIONS

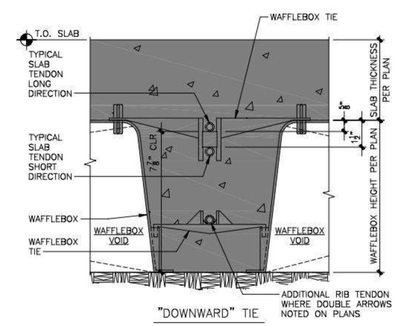

9 TENDON PLACEMENT

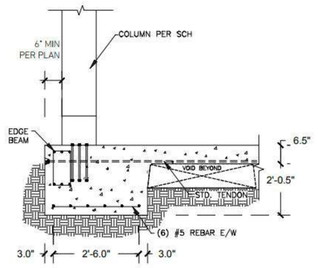

10 CONNECTION COLUMN TO PAD

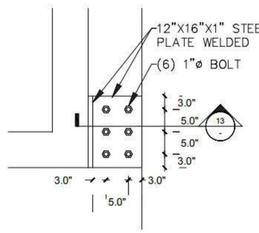

11 POOL CONNECTION DETAIL - 1

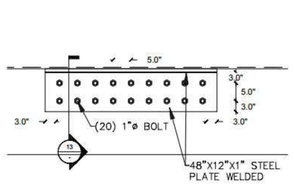

12 POOL CONNECTION DETAIL - 2

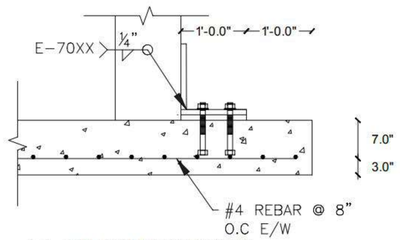

13 POOL CONNECTION SECTION

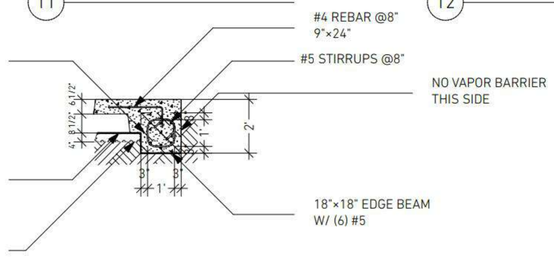

14 EDGE BEAM DETAIL 3/8" = 1'-0"

GIST RD. SFR 2

APN544-23-042; PROPOSED ADDRESS: 20599 GIST RD, LOS GATOS, CA 95033

REVISION HISTORY

S3DA Structural & Architectural Design
4196 Adams Ave. San Diego CA 92116
(619) 404-0220

Mr. Nader Moavenian
nader.m@s3da-design.com

REGISTERED PROFESSIONAL ENGINEER BARRETT CROOK C 057196 Ex. 12.31.202 CIVIL STATE OF CALIFORNIA
2-11-2020

1. The contractor must check all dimensions on-site before commencing work
2. These drawings are to be read in conjunction with all relevant designer, engineer or specialist drawings and specifications
3. The contractor is responsible for providing all necessary temporary support to the building and any adjacent structures

COUNTY APPROVAL STAMP

REVISION DATE
01/02/21

DRAWING NAME
142 SFR2 Foundation details

Drawing Scale

H2-S8

EMBEDDED COLUMN POST FOR CFS BUILT-UP COLUMNS

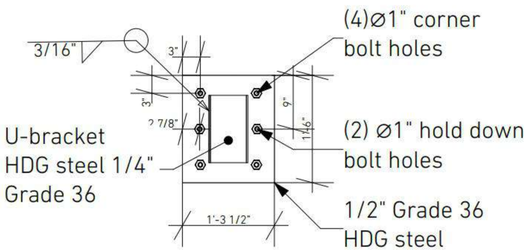

NOTE:
Treat all welds with
ZRC® Cold Galvanizing Compound
or similar

Column connection plate dimensions 1" = 1'-0"

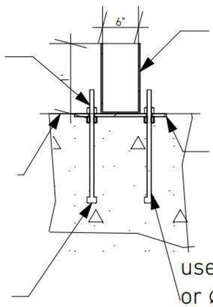

Section view 1" = 1'-0"

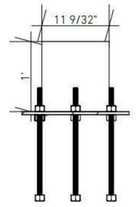

NOTE:
FOR 10" COLUMNS
U-BRACKET WIDTH
WIDTH IS 9 9/32"

Side view

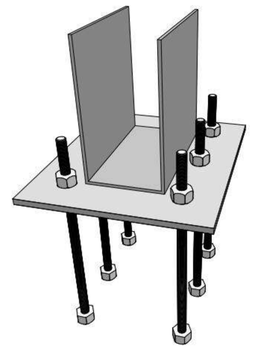

ASSEMBLED CONNECTION PLATE

NOTE:
1. Cover exposed thread areas with tape prior to concrete pour
2. Treat all welds with **ZRC® Cold Galvanizing Compound** or similar
3. Use hot dip galvanized connection hardware: bolts, rods, nuts
4. Do not combine rods & nuts of different galvanization types, i.e. electroplated galvanized and hot-dip galvanized
5. Remove nuts from middle rods for installation of hold downs
6. Tighten corner nuts after concrete pour
7. Level steel plate in all directions prior to concrete pour
8. Steel plate top to be flush with finished floor SOC
9. Washers or bearing plates are **not required**

BUILT-UP CFS COLUMN DETAILS

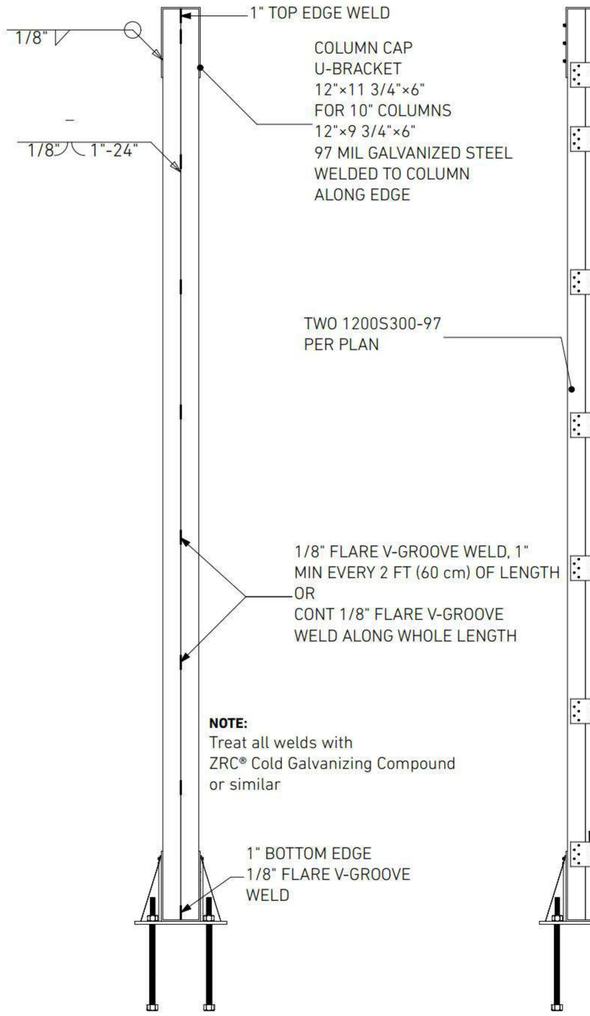

NOTE:
Treat all welds with
ZRC® Cold Galvanizing Compound
or similar

WELDED CFS BUILT-UP COLUMN

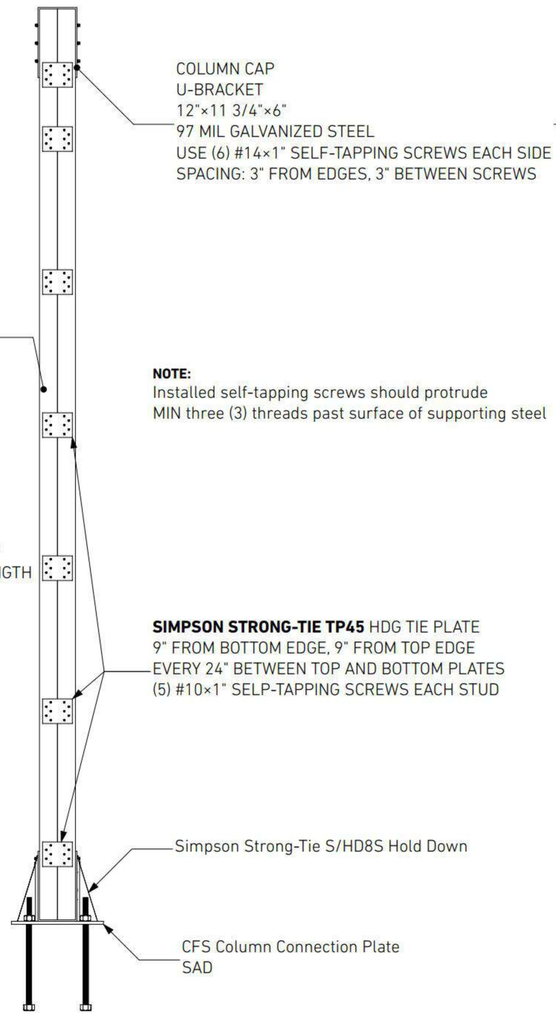

NOTE:
Installed self-tapping screws should protrude
MIN three (3) threads past surface of supporting steel

SCREW-CONNECTED CFS BUILT-UP COLUMN

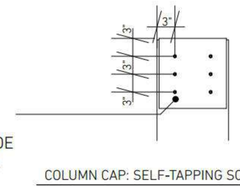

COLUMN CAP: SELF-TAPPING SCREWS

COLUMN SCHEDULE

COLUMN NUMBER	LENGTH	WIDTH	CFS MEMBERS
ARG-C1	26'-3"	12"	1200S300-97×2
ARG-C2	9'-3 ½"	12"	1200S300-97×2
ARG-C3	21'-2"	12"	1200S300-97×2
ARG-C4	21'-2"	12"	1200S300-97×2
ARG-C5	24'-9 ½"	12"	1200S300-97×2
ARG-C6	25'-3 ½"	12"	1200S300-97×2
ARG-C7	21'-2"	12"	1200S300-97×2
ARG-C8	10'-4"	10"	1000S300-97×2
ARG-C9	21'-2"	12"	1200S300-97×2
ARG-C10	21'-2"	12"	1200S300-97×2
ARG-C11	23'-9 ½"	12"	1200S300-97×2
ARG-C12	27'-7"	12"	1200S300-97×2
ARG-C13	29'-1"	12"	1200S300-97×2
ARG-C14	26'-2"	12"	1200S300-97×2
ARG-C15	25'-8"	12"	1200S300-97×2
ARG-C16	25'-8"	12"	1200S300-97×2
ARG-C17	25'-8"	12"	1200S300-97×2
ARG-C18	25'-8"	12"	1200S300-97×4

NOTES:

- ROOF ENDS OF COLUMNS ARG-C5, ARG-C6 AND ARG-C11 SHOULD BE SLOPED FLUSH WITH TOP OF ROOF RAFTERS. THE RAFTERS SHOULD SIT PLUM WITH THE COLUMN'S TOP PLATE.

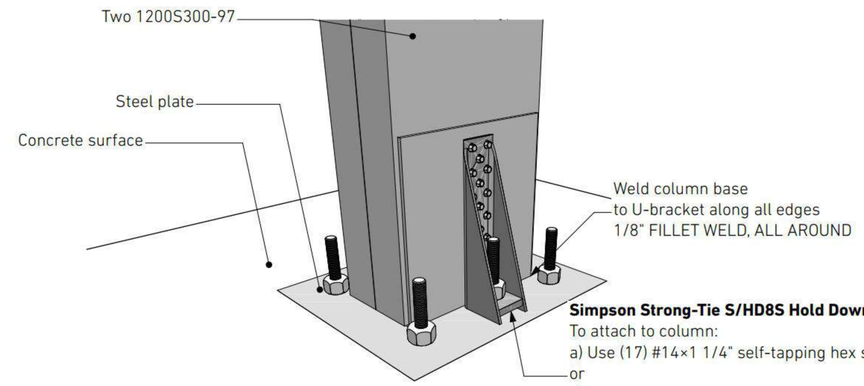

Built-up CFS Column Installed on Leveling Plate

GIST RD. SFR 2

APN544-23-042; PROPOSED ADDRESS: 20599
GIST RD, LOS GATOS, CA 95033

REVISION HISTORY

S3DA Structural & Architectural Design
4196 Adams Ave. San Diego CA 92116
(619) 404-0220

Mr. Nader Moavenian
nader.m@s3da-design.com

REGISTERED PROFESSIONAL ENGINEER
BARRETT CROOK
C 057186
Exp. 12-31-2021
CIVIL
STATE OF CALIFORNIA

2-11-2020

1. The contractor must check all dimensions on-site before commencing work
2. These drawings are to be read in conjunction with all relevant designer, engineer or specialist drawings and specifications
3. The contractor is responsible for providing all necessary temporary support to the building and any adjacent structures

COUNTY APPROVAL STAMP

REVISION DATE
01/02/21

DRAWING NAME
143 SFR2 Built-up CFS columns

Drawing Scale
1/128"= 1'-0"

H2-S9

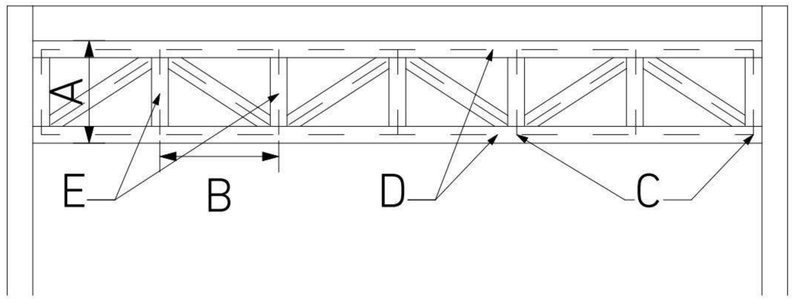

TRUSS TABLE

LETTER	DESCRIPTION
A	24"
B	16"
C	(12) #6 SCREWS 20ga
D	CSJ5 550S162X14
E	CSJ5400S162X12

Typical Truss

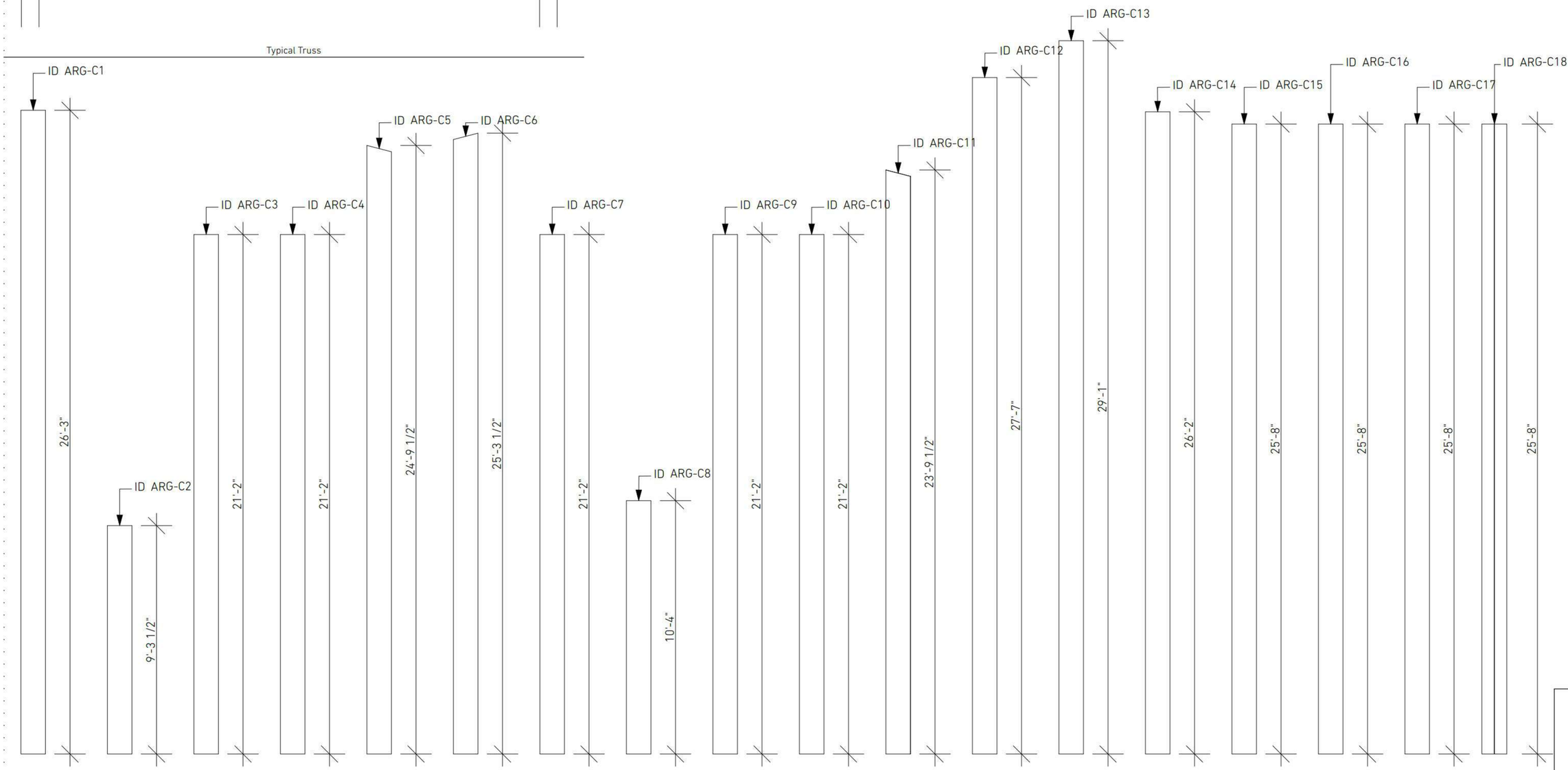

CFS COLUMNS

1/2" = 1'-0"

GIST RD. SFR 2

APN544-23-042; PROPOSED ADDRESS: 20599 GIST RD, LOS GATOS, CA 95033

REVISION HISTORY

S3DA Structural & Architectural Design
4196 Adams Ave. San Diego CA 92116
(619) 404-0220

Mr. Nader Moavenian
nader.m@s3da-design.com

REGISTERED PROFESSIONAL ENGINEER
BARRETT CROOK
C 057199
Exp. 12.31.2021
CIVIL
STATE OF CALIFORNIA

2-11-2020

1. The contractor must check all dimensions on-site before commencing work

2. These drawings are to be read in conjunction with all relevant designer, engineer or specialist drawings and specifications

3. The contractor is responsible for providing all necessary temporary support to the building and any adjacent structures

COUNTY APPROVAL STAMP

REVISION DATE
01/02/21

DRAWING NAME
144 SFR2 CFS column schedule

Drawing Scale
1/2" = 1'-0"

H2-S10

INSTALL CLASS A ROOF COVER PER SANTA CLARA COUNTY APPROVAL CONDITIONS. FOLLOW MANUFACTURER'S SPECIFICAITONS. DO NOT EXCEED 40PSF DEAD LOAD PER PERMATHERM SIP SPAN TABLE SPECIFICATIONS

PHOTOVOLTAIC CLASS A **TESLA ROOF WEIGHT**

TESLA ROOF TILES WEIGHT	LBS
1 PHOTOVOLTAIC TILE (PVT)	**23**
1 GLASS TILE (GT)	**13**

WEIGHT PER SQUARE FOOT	PSF
1 sf of PVT	**7.3**
1 sf of GT	**4.1**

COMBINATION WEIGHT	PSF
40%PVT	**5.4**
50%PVT	**5.7**
60%PVT	**6.1**
70%PVT	**6.4**
80%PVT	**6.7**
90%PVT	**7.0**
100%PVT	**7.3**

NOTE:
APPROX 32 PANELS PER 10x10' SQUARE

PermaTherm
Insulation Innovation

269 Industrial Park Rd.
Monticello, GA 31064
[p] (706) 468-7500
[f] (706) 468-7510
[e] info@permatherm.net

EPS Insulated Panels

Maximum Spans for Uniform Loads
(Units in Feet for 26-Gauge Steel Panel Skins)

Core Thickness	Total Uniform Load (lb/sq ft)						
	5	10	20	30	40	50	60
2 inch	18	13	9	7	6	5	3
3 inch	22	16	10	9	6	5	4
4 inch	25	18	13	10	8	7	6
5 inch	30	22	15	12	9	8	7
6 inch	32	23	16	13	10	9	8
8 inch	36	25	19	15	12	11	10
10 inch	41	29	20	17	14	12	11

**Uniform Load Spans based on the following: face wrinkling with a safety factor of 2; deflection of L/240 of span; or core shear with a safety factor of 5. Uniform Load Spans are rounded to the lower footage.*

** All values are calculated using core material of Type 1 (1 lb. Density) EPS Foam. Greater values can be reached with higher density foam which is available.*

Other Guidelines
PermaTherm Architectural Insulating Panels are designed to carry specified total loads, with maximum computed buckling stress not to exceed the maximum allowable buckling stress of the facings.

The inside face of all panels must be cut at girt attachments to avoid compression bucking of the exterior skin.

Wherever interior panel skins are extended to the outside (warm side) surface, a thermal break must be cut to avoid thermal conductivity.

Block panel packages should be stored above ground to keep out of water provide drainage.

Contents and logo are property of PermaTherm, Inc.
All rights reserved. Copyright 2010©

SMACNA Downspout & Gutter Sizing Reports

Project Name: APN 544-23-042 Second Floor Roof

Rainfall Intensity (in/hr): 3.7
Based on rainfall averages in San Francisco, CALIFORNIA (100 years)

Roof Rainfall Design Area (ft²): 3,173.26
* Area of Largest Roof Serving a Single Gutter System
Design Area manually entered by user

Gutter in Lineal Ft: 242
* Length at Largest Roof Serving a Single Gutter System

Gutter Length Serving Single DS (ft.): 49
*Assumption: downspouts are equally spaced
**Maximum gutter length to be served by a downspout is 50ft per SMACNA ASMM

M (depth to width ratio): 0.75

Min. Gutter Width (in.): 4 [Rectangular]

Min. Gutter Depth (in.): 3

# of Downspouts: 5

Min. Area per DS (in²): 1.92

Min. DS Size (in): 3 [Corrugated Round]
*Per Table 1-3 on page 1.4 of SMACNA ASMM

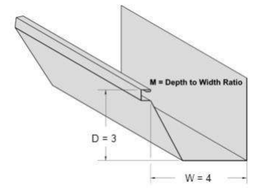

Calculations are derived using the 7th Edition of SMACNA's Architectural Sheet Metal Manual

SMACNA Downspout & Gutter Sizing Reports

Project Name: APN544-23-042 Ground floor

Rainfall Intensity (in/hr): 3.7
Based on rainfall averages in San Francisco, CALIFORNIA (100 years)

Roof Rainfall Design Area (ft²): 1,088.62
* Area of Largest Roof Serving a Single Gutter System
Design Area manually entered by user

Gutter in Lineal Ft: 159
* Length at Largest Roof Serving a Single Gutter System

Gutter Length Serving Single DS (ft.): 40
*Assumption: downspouts are equally spaced
**Maximum gutter length to be served by a downspout is 50ft per SMACNA ASMM

M (depth to width ratio): 0.75

Min. Gutter Width (in.): 3 [Rectangular]

Min. Gutter Depth (in.): 2.5

# of Downspouts: 4

Min. Area per DS (in²): 0.82

Min. DS Size (in): 1.75 x 2.25 [Rectangular Corrugated]
*Per Table 1-3 on page 1.4 of SMACNA ASMM

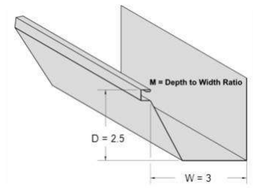

Calculations are derived using the 7th Edition of SMACNA's Architectural Sheet Metal Manual

SMACNA Downspout & Gutter Sizing Reports

Project Name: APN544-23-042 Second Floor

Rainfall Intensity (in/hr): 3.7
Based on rainfall averages in San Francisco, CALIFORNIA (100 years)

Roof Rainfall Design Area (ft²): 3,173.26
* Area of Largest Roof Serving a Single Gutter System
Design Area manually entered by user

Gutter in Lineal Ft: 242
* Length at Largest Roof Serving a Single Gutter System

Gutter Length Serving Single DS (ft.): 49
*Assumption: downspouts are equally spaced
**Maximum gutter length to be served by a downspout is 50ft per SMACNA ASMM

M (depth to width ratio): 0.75

Min. Gutter Width (in.): 4 [Rectangular]

Min. Gutter Depth (in.): 3

# of Downspouts: 5

Min. Area per DS (in²): 1.92

Min. DS Size (in): 3 [Plain Round]
*Per Table 1-3 on page 1.4 of SMACNA ASMM

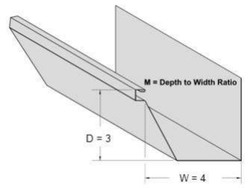

Calculations are derived using the 7th Edition of SMACNA's Architectural Sheet Metal Manual

GUTTER LOCATION	RAIN COLLECTION AREA	OVERALL LENGTH (FT)	MINIMUM GUTTER DIMENSIONS	MINIMUM DOWNSPOUT SIZE
SECOND FLOOR	3,173 ft2	242	4 x 3" RECTANGULAR	5 COUNT: 4 x 3" MIN CORRUGATED RECTANGULAR
GYM & SAUNA, AWNING	1089 ft2	159	2.5 x 3" RECTANGULAR	4 COUNT: 1.75 x 2.25" MIN CORRUGATED RECTANGULAR
SUN DECK	538 ft2	49	3 x 3.5" RECTANGULAR	1 COUNT 1.75 x 2.25 MIN CORR RECT; CONNECTS TO AWNING DOWNSPOUT
TOTAL	4800 ft2	450		

NOTE: SEE SMACNA REPORTS FOR CALCS

CONNECT DOWNSPOUTS TO RAIN WATER DRAINAGE SYSTEM.
SEE RAIN WATER DRAINAGE DESIGNS

GIST RD. SFR 2

APN544-23-042; PROPOSED ADDRESS: 20599 GIST RD, LOS GATOS, CA 95033

REVISION HISTORY

S3DA Structural & Architectural Design
4196 Adams Ave. San Diego CA 92116
(619) 404-2220

Mr. Nader Moavenian
nader.m@s3da-design.com

REGISTERED PROFESSIONAL ENGINEER
BARRETT CROOKHAM
C 057199
Exp. 12-31-2021
CIVIL
STATE OF CALIFORNIA

2-11-2020

1. The contractor must check all dimensions on-site before commencing work

2. These drawings are to be read in conjunction with all relevant designer, engineer or specialist drawings and specifications

3. The contractor is responsible for providing all necessary temporary support to the building and any adjacent structures

COUNTY APPROVAL STAMP

REVISION DATE
01/02/21

DRAWING NAME
145 SFR2 Roof plan notes, reports, specs

Drawing Scale

H2-S11

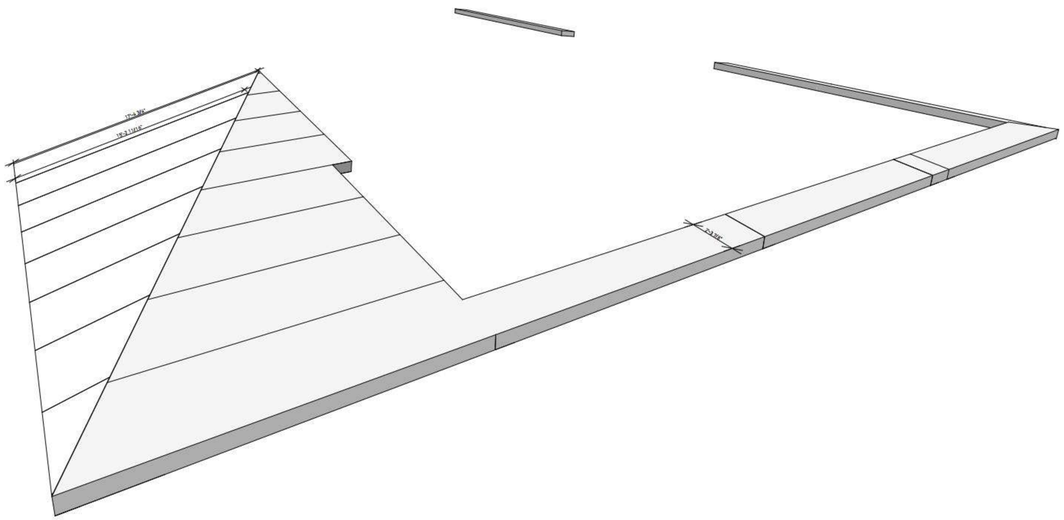

ROOF & AWNING SIP PANEL LAYOUT GROUND FLOOR. ISOMETRIC VIEW

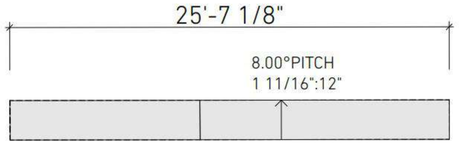

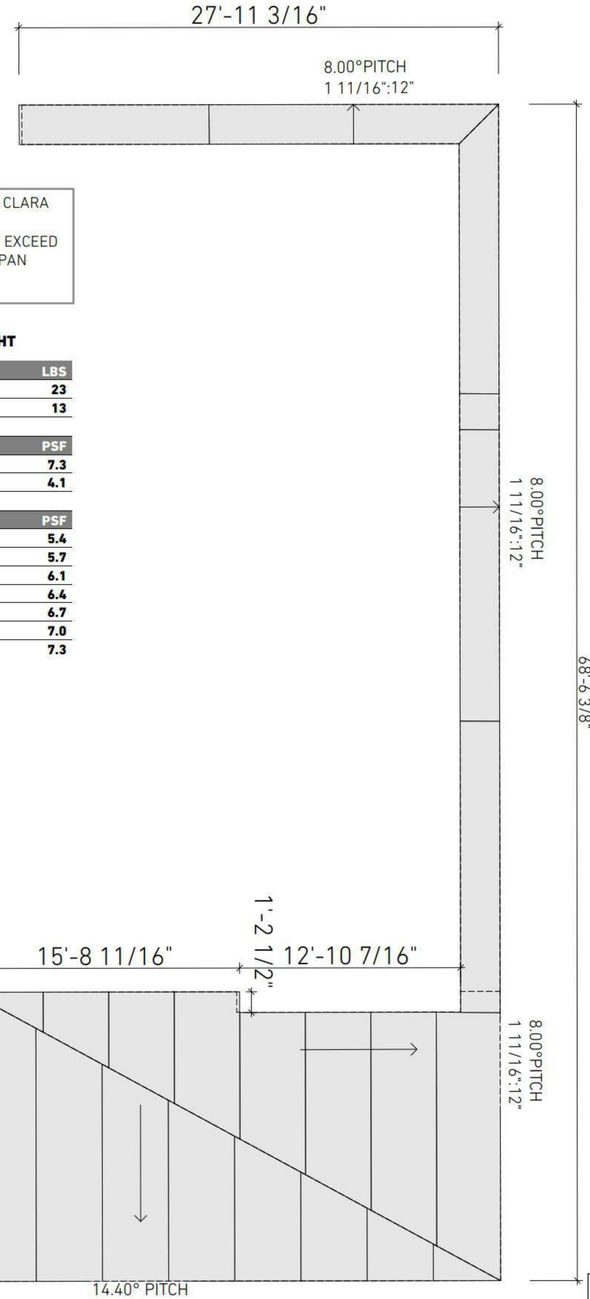

INSTALL CLASS A ROOF COVER PER SANTA CLARA COUNTY APPROVAL CONDITIONS. FOLLOW MANUFACTURER'S SPECIFICAITONS. DO NOT EXCEED 40PSF DEAD LOAD PER PERMATHERM SIP SPAN TABLE SPECIFICATIONS

PHOTOVOLTAIC CLASS A **TESLA ROOF WEIGHT**

TESLA ROOF TILES WEIGHT	LBS
1 PHOTOVOLTAIC TILE (PVT)	**23**
1 GLASS TILE (GT)	**13**

WEIGHT PER SQUARE FOOT	PSF
1 sf of PVT	**7.3**
1 sf of GT	**4.1**

COMBINATION WEIGHT	PSF
40%PVT	**5.4**
50%PVT	**5.7**
60%PVT	**6.1**
70%PVT	**6.4**
80%PVT	**6.7**
90%PVT	**7.0**
100%PVT	**7.3**

NOTE:
APPROX 32 PANELS PER 10x10' SQUARE

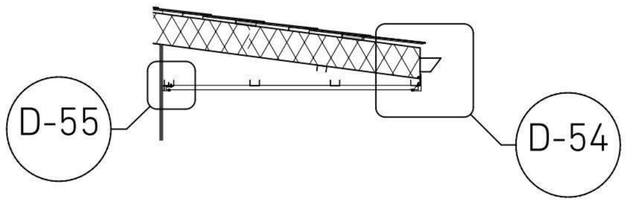

Eave detail

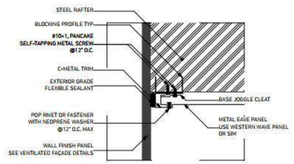

D-55 EAVE FINISH OUTER EDGE DETAIL

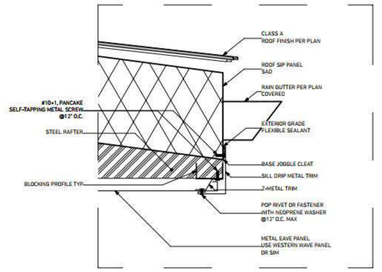

D-54 EAVE FINISH OUTER EDGE DETAIL

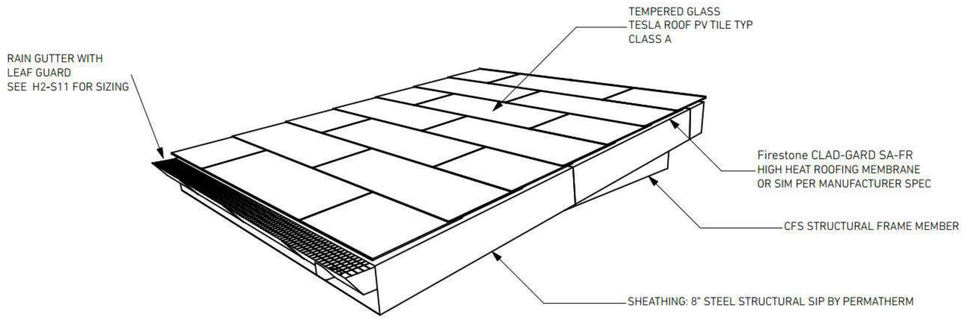

3D-30 TESLA PV ROOF DETAIL

GIST RD. SFR 2

APN544-23-042; PROPOSED ADDRESS: 20599
GIST RD, LOS GATOS, CA 95033

REVISION HISTORY

S3DA Structural & Architectural Design
4196 Adams Ave. San Diego CA 92116
(619) 404-0220

Mr. Nader Moavenian
nader.m@s3da-design.com

REGISTERED PROFESSIONAL ENGINEER
BARRETT CROOK
C 057199
Exp. 12-31-2021
CIVIL
STATE OF CALIFORNIA

2-11-2020

1. The contractor must check all dimensions on-site before commencing work

2. These drawings are to be read in conjunction with all relevant designer, engineer or specialist drawings and specifications

3. The contractor is responsible for providing all necessary temporary support to the building and any adjacent structures

COUNTY APPROVAL STAMP

REVISION DATE
01/02/21

DRAWING NAME
146 SFR2 Roof plan. SIP layout. Ground floor

Drawing Scale
1:50

H2-S12

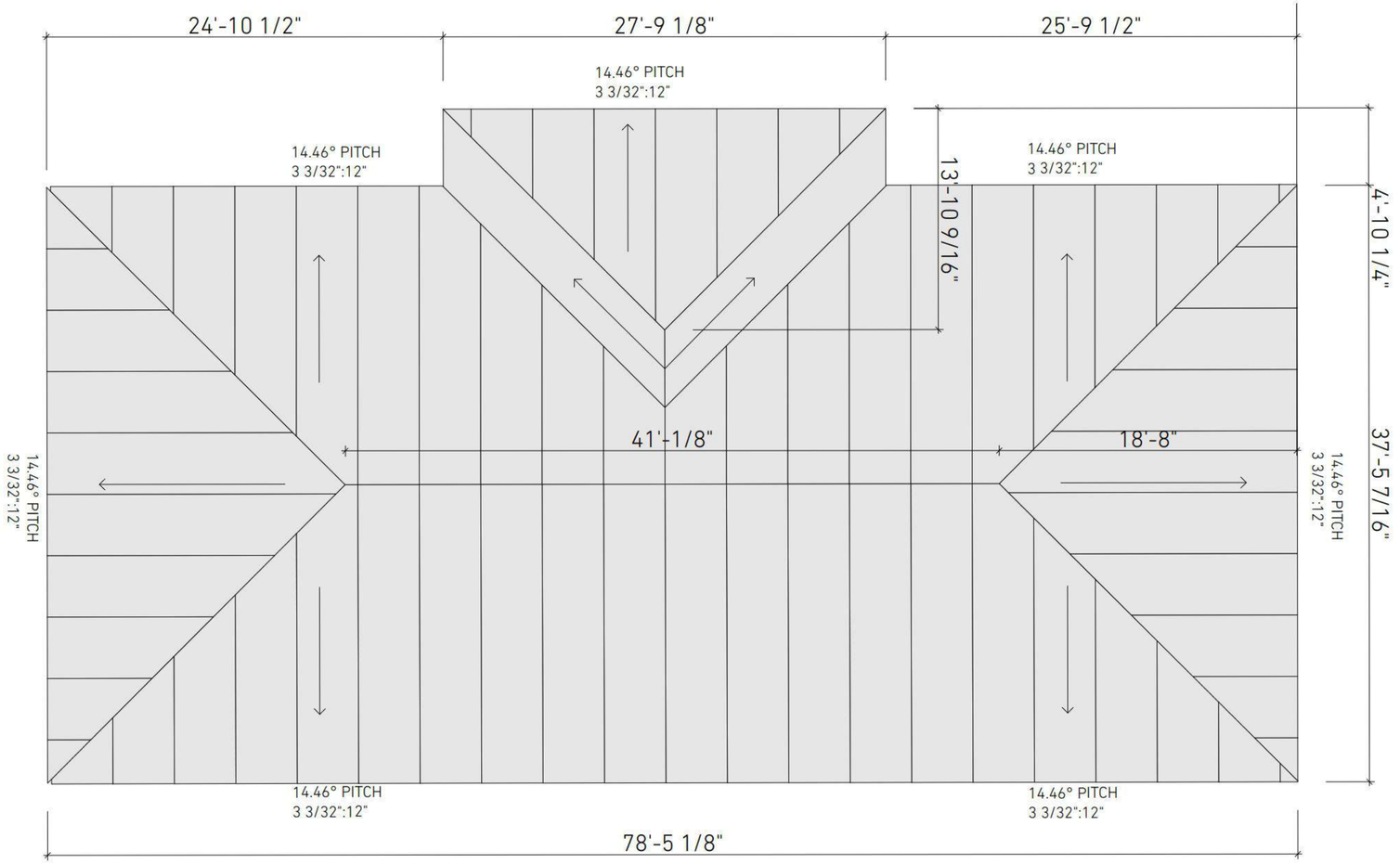

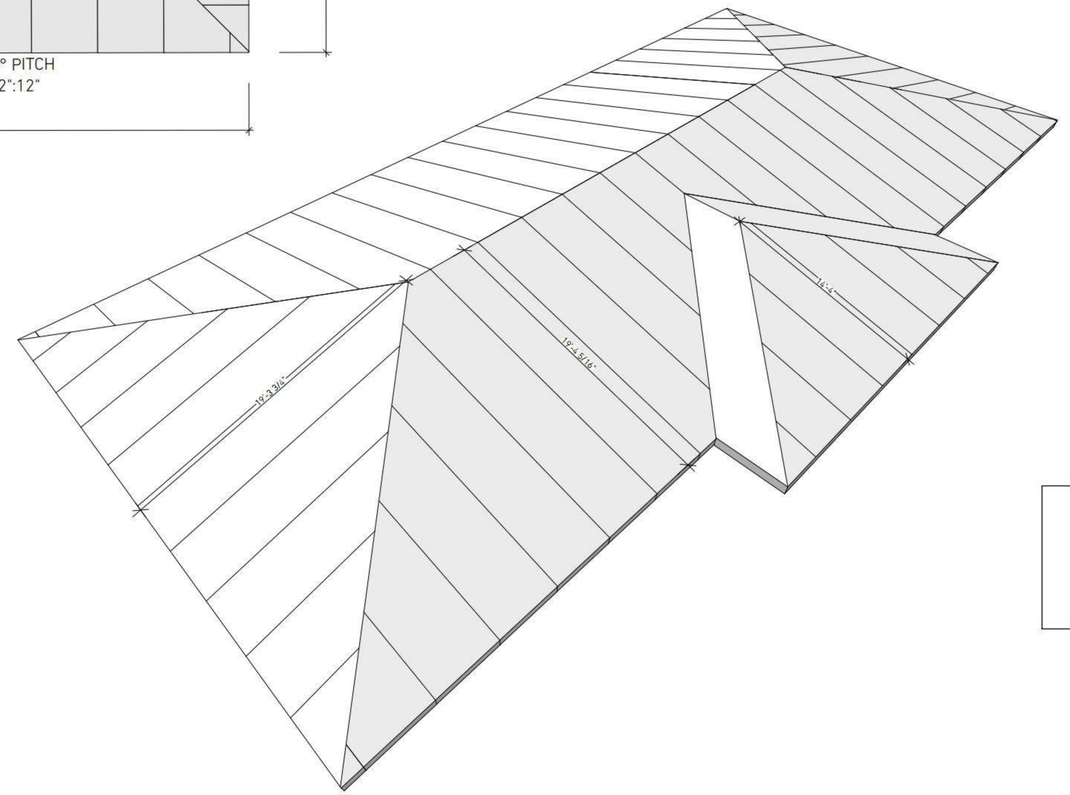

SECOND FLOOR ROOF. SIP LAYOUT. AXONOMETRIC VIEW

GIST RD. SFR 2

APN544-23-042; PROPOSED ADDRESS: 20599
GIST RD, LOS GATOS, CA 95033

REVISION HISTORY

S3DA Structural & Architectural Design
4196 Adams Ave. San Diego CA 92116
(619) 404-0220

Mr. Nader Moavenian
nader.m@s3da-design.com

REGISTERED PROFESSIONAL ENGINEER
GARRETT CROOK
C 057196
Exp. 12-31-202
CIVIL
STATE OF CALIFORNIA

2-11-2020

1. The contractor must check all dimensions on-site before commencing work

2. These drawings are to be read in conjunction with all relevant designer, engineer or specialist drawings and specifications

3. The contractor is responsible for providing all necessary temporary support to the building and any adjacent structures

COUNTY APPROVAL STAMP

REVISION DATE
01/02/21

DRAWING NAME
147 SFR2 Roof plan. SIP Panel Layout. Second floor

1:50

H2-S13

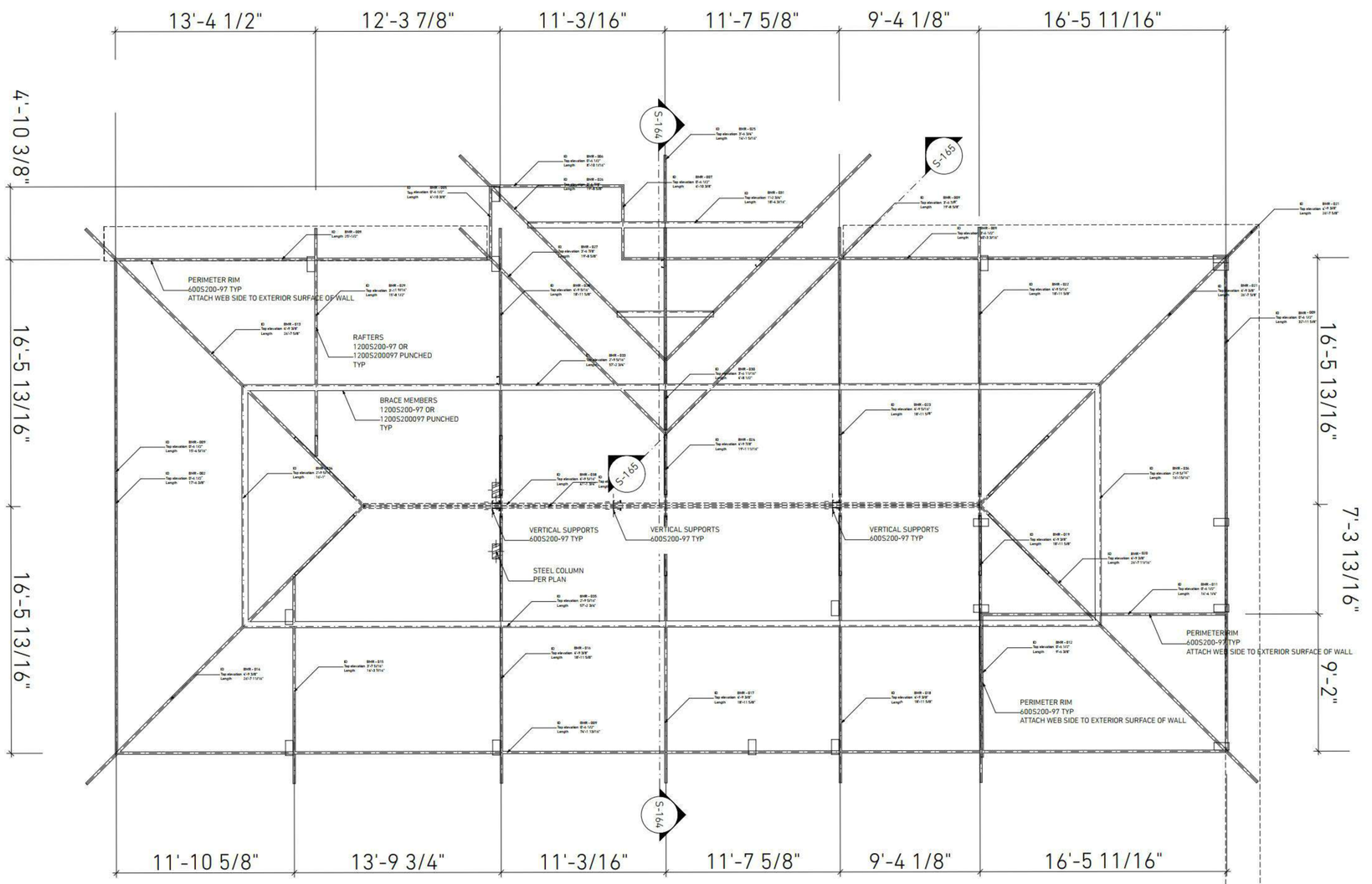

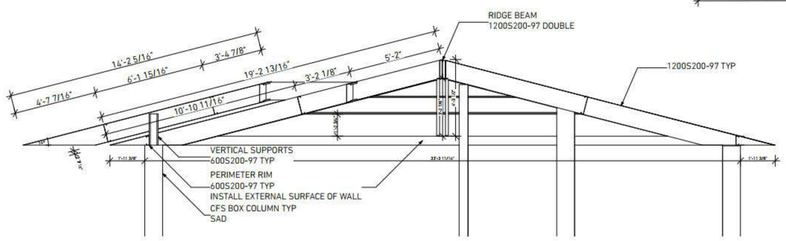

S-164 Framing member details. Dimensions 1/4" = 1'-0"

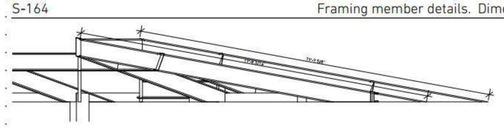

S-165 Entry portico framing detail 1/4" = 1'-0"

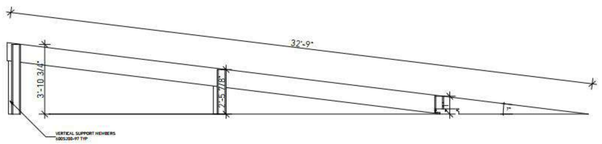

S-166 Gym & Sauna roof beam 1/4" = 1'-0"

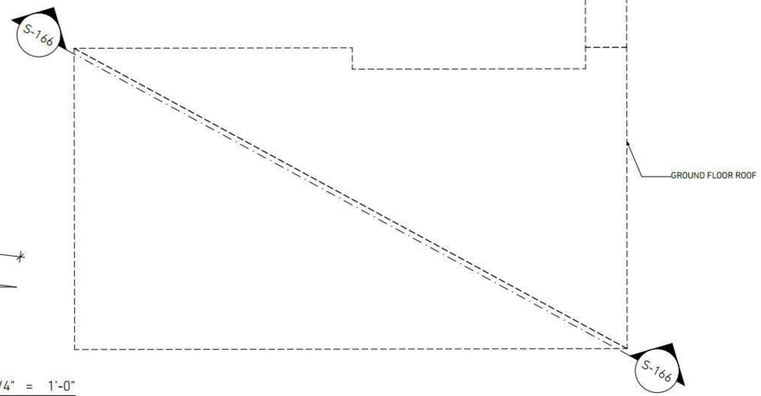

GIST RD. SFR 2

APN544-23-042; PROPOSED ADDRESS: 20599 GIST RD, LOS GATOS, CA 95033

REVISION HISTORY

S3DA Structural & Architectural Design
4196 Adams Ave. San Diego CA 92116
(619) 404-0220

Mr. Nader Moavenian
nader.m@s3da-design.com

REGISTERED PROFESSIONAL ENGINEER
BARRETT CROOK
C 057199
Exp. 12-31-2021
CIVIL
STATE OF CALIFORNIA

2-11-2020

1. The contractor must check all dimensions on-site before commencing work

2. These drawings are to be read in conjunction with all relevant designer, engineer or specialist drawings and specifications

3. The contractor is responsible for providing all necessary temporary support to the building and any adjacent structures

COUNTY APPROVAL STAMP

REVISION DATE
01/02/21

DRAWING NAME
148 SFR2 Roof framing plan.

Drawing Scale
1/4" = 1'-0"

H2-S14

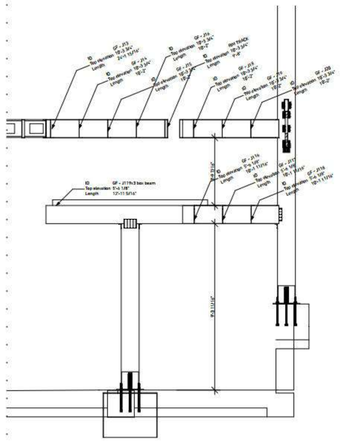

S-167 1/4" = 1'-0"

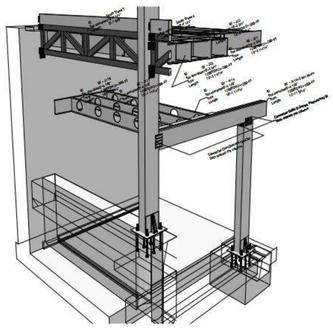

3D-66 Framing above laundry room

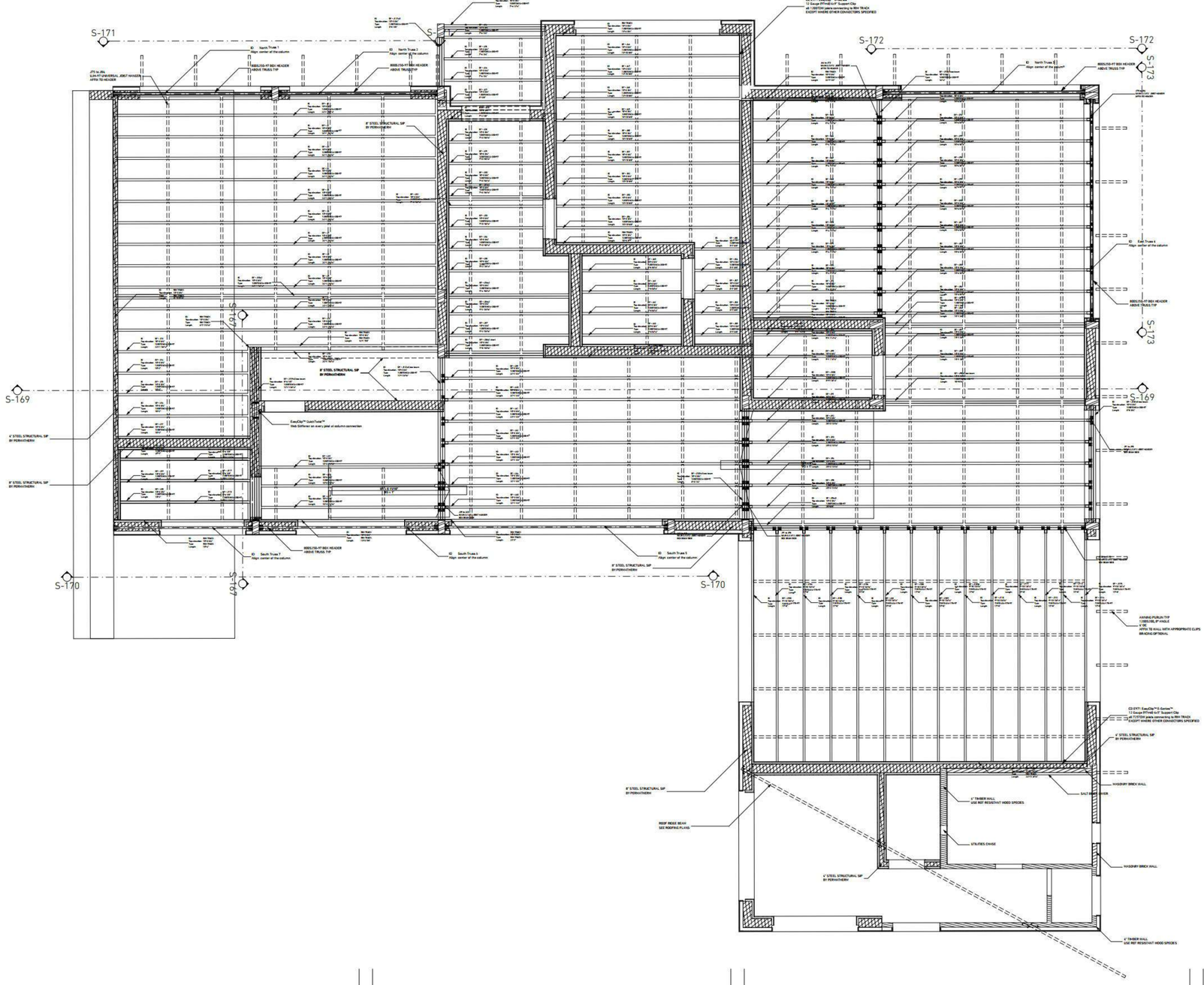

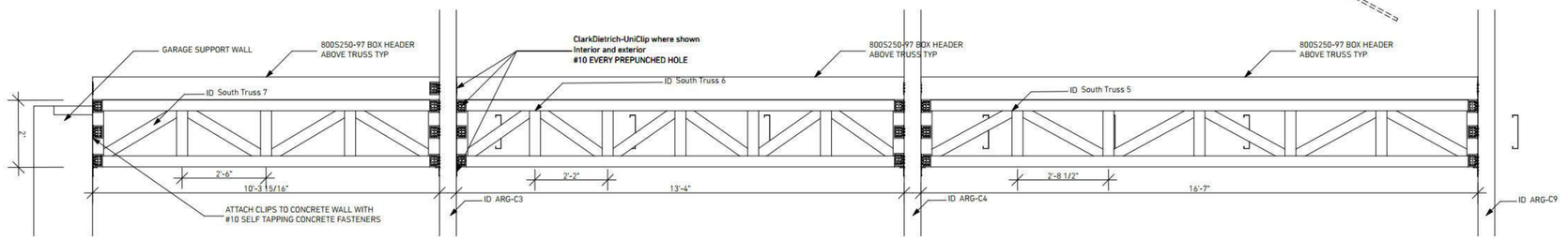

S-170 S-170 South trusses 1/2" = 1'-0"

GIST RD. SFR 2

APN544-23-042; PROPOSED ADDRESS: 20599 GIST RD, LOS GATOS, CA 95033

REVISION HISTORY

S3DA Structural & Architectural Design
4196 Adams Ave. San Diego CA 92116
(619) 404-0220

Mr. Nader Moavenian
nader.m@s3da-design.com

REGISTERED PROFESSIONAL ENGINEER BARRETT CROOKS C 057186 Exp.12.31.202 CIVIL STATE OF CALIFORNIA

2-11-2020

1. The contractor must check all dimensions on-site before commencing work

2. These drawings are to be read in conjunction with all relevant designer, engineer or specialist drawings and specifications

3. The contractor is responsible for providing all necessary temporary support to the building and any adjacent structures

COUNTY APPROVAL STAMP

REVISION DATE
01/02/21

DRAWING NAME
149 SFR2 Framing Plan Ground Floor

Drawing Scale
1/4" = 1'-0"

H2-S15

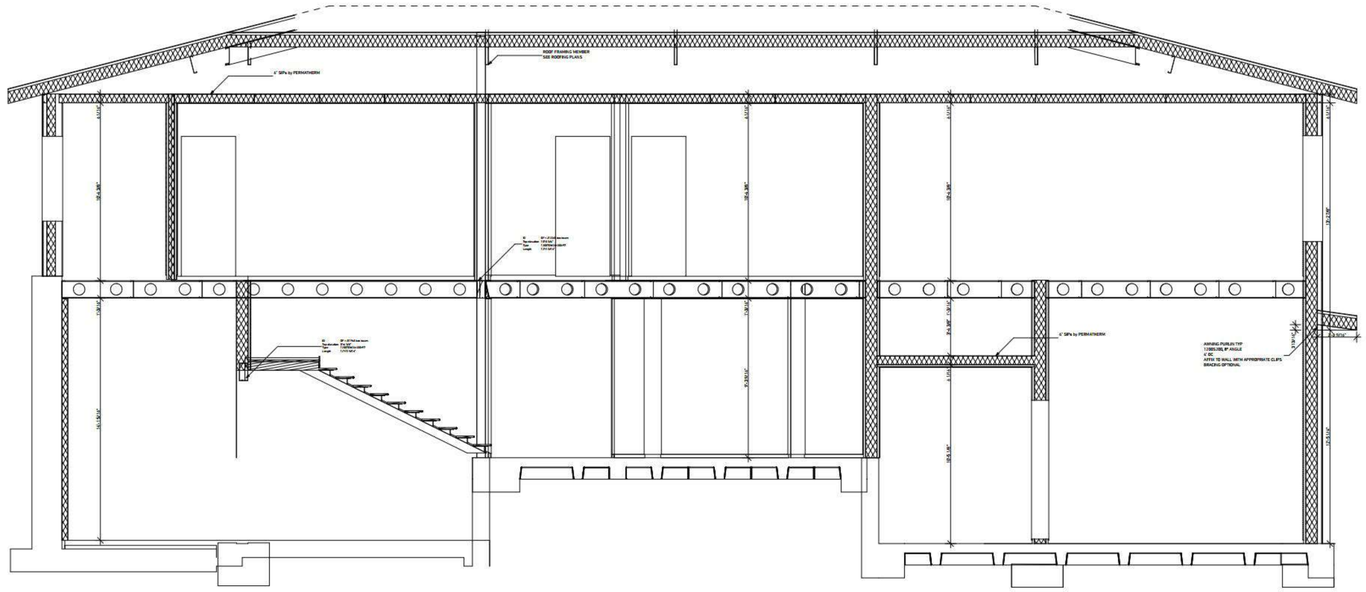

Framing section view

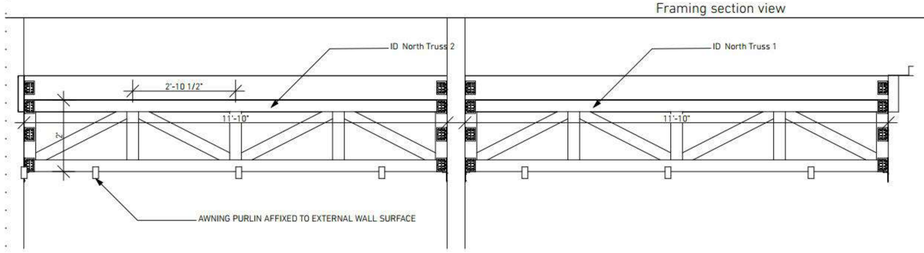

NORTH TRUSS 1 AND 2 1/2" = 1'-0"

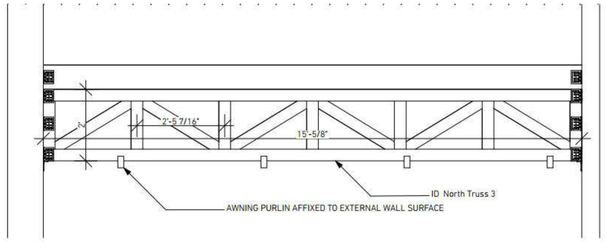

NORTH TRUSS 3

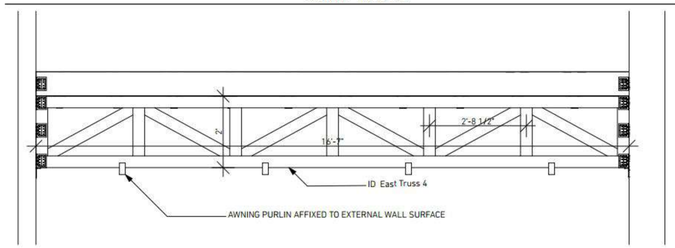

S-173 EAST TRUSS 4

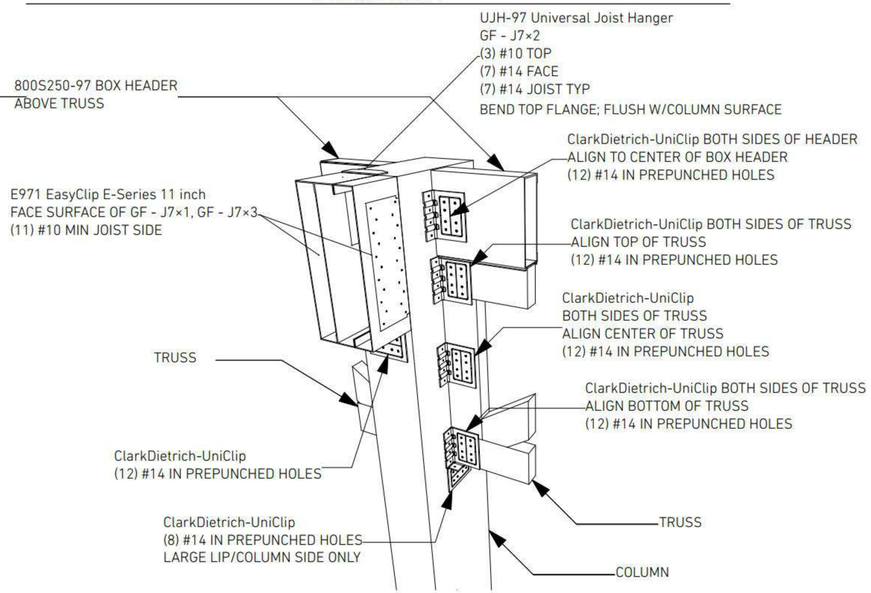

3D-45 BOX BEAM, TRUSS TO COLUMN CONNECTIONS

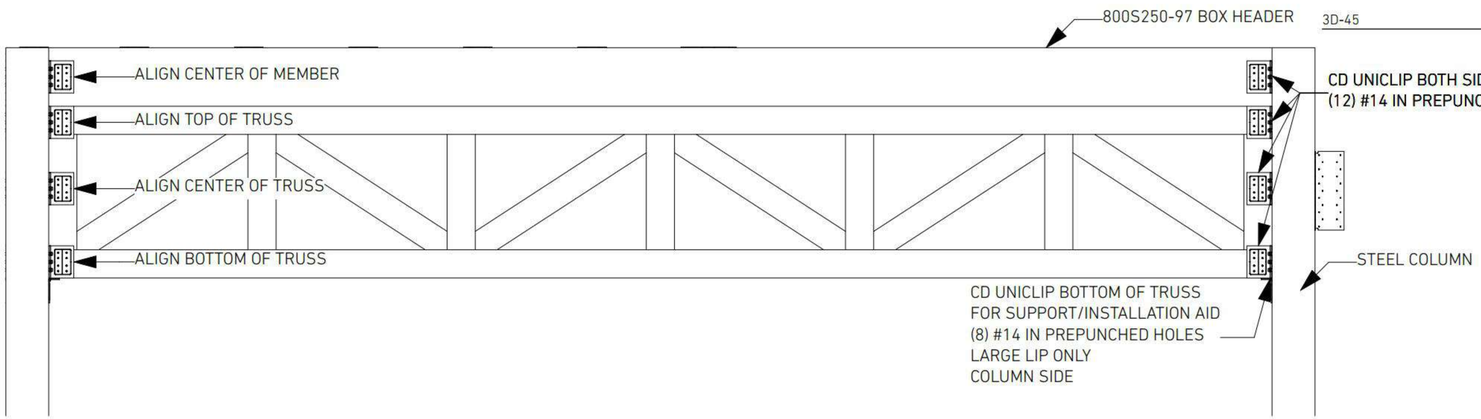

S-92 TYPICAL TRUSS TO COLUMN CONNECTION 1:100

GIST RD. SFR 2

APN544-23-042; PROPOSED ADDRESS: 20599 GIST RD, LOS GATOS, CA 95033

REVISION HISTORY

S3DA Structural & Architectural Design
4196 Adams Ave, San Diego CA 92116
(619) 404-0220

Mr. Nader Moavenian
nader.m@s3da-design.com

REGISTERED PROFESSIONAL ENGINEER
BARRETT CROOK
C 057199
Exp. 12-31-2021
CIVIL
STATE OF CALIFORNIA

2-11-2020

1. The contractor must check all dimensions on-site before commencing work

2. These drawings are to be read in conjunction with all relevant designer, engineer or specialist drawings and specifications

3. The contractor is responsible for providing all necessary temporary support to the building and any adjacent structures

COUNTY APPROVAL STAMP

REVISION DATE
01/02/21

DRAWING NAME
150 SFR2 Framing sections; connections
1:50

H2-S16

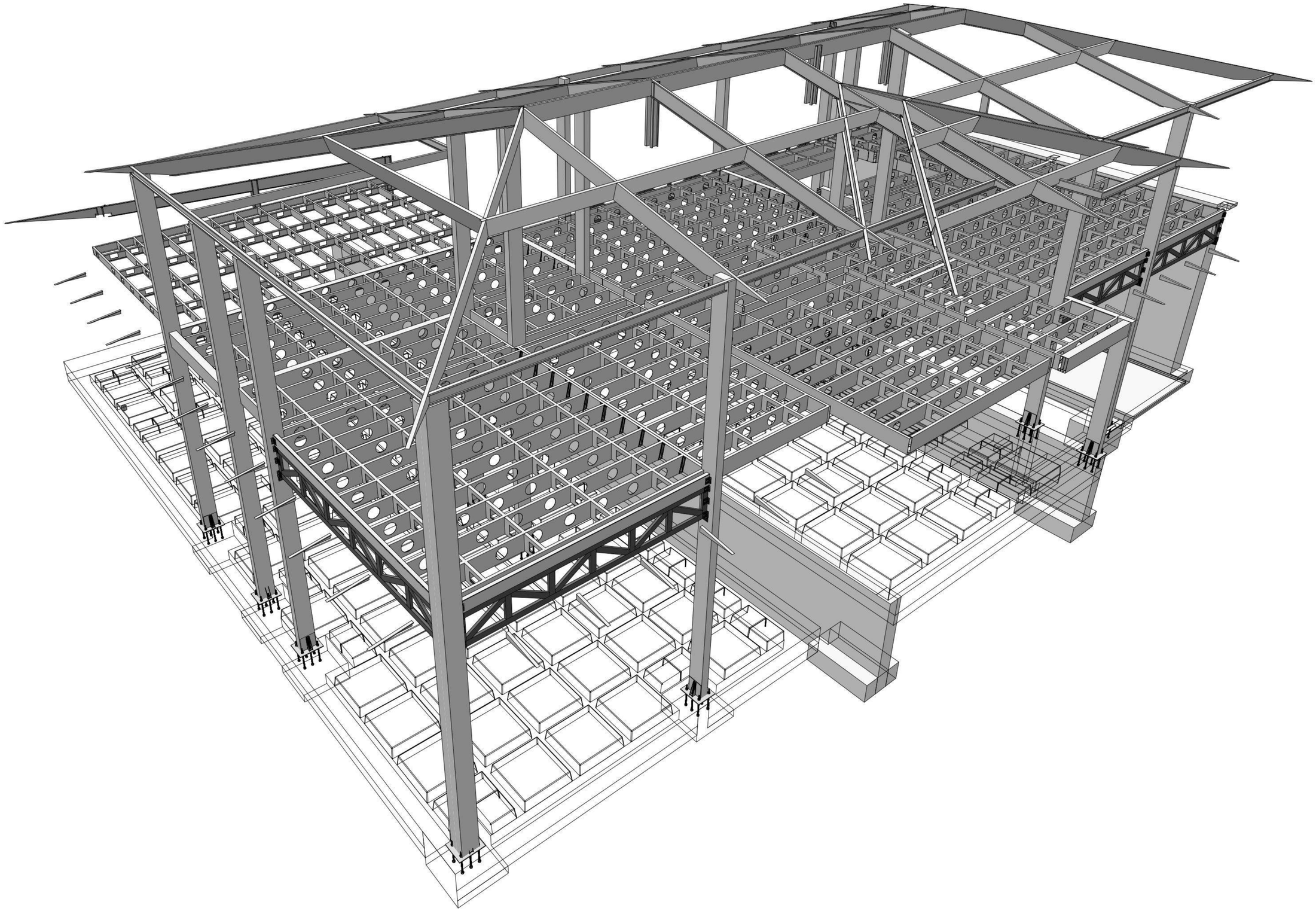

3D-67 Steel structure; Isometric view

GIST RD. SFR 2

APN544-23-042; PROPOSED ADDRESS: 20599
GIST RD, LOS GATOS, CA 95033

REVISION HISTORY

S3DA Structural & Architectural Design
4196 Adams Ave. San Diego CA 92116
(619) 404-0220

Mr. Nader Moavenian
nader.m@s3da-design.com

REGISTERED PROFESSIONAL ENGINEER
BARRETT CROOM
C 057196
Exp. 12.31.2021
CIVIL
STATE OF CALIFORNIA

2-11-2020

1. The contractor must check all dimensions on-site before commencing work

2. These drawings are to be read in conjunction with all relevant designer, engineer or specialist drawings and specifications

3. The contractor is responsible for providing all necessary temporary support to the building and any adjacent structures

COUNTY APPROVAL STAMP

REVISION DATE
01/02/21

DRAWING NAME
151 SFR2. CFS FRAMING. ISOMETRIC VIEW

Drawing Scale
1/32" = 1'-0"

H2-S17

BASE ATTACHMENT DETAIL

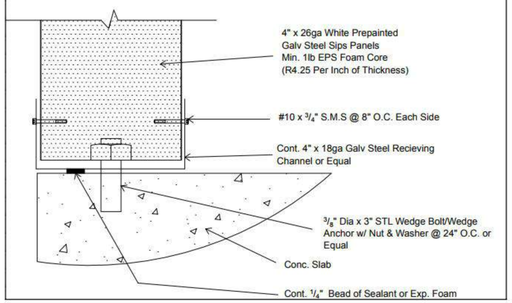

Beam To SIP Wall Detail

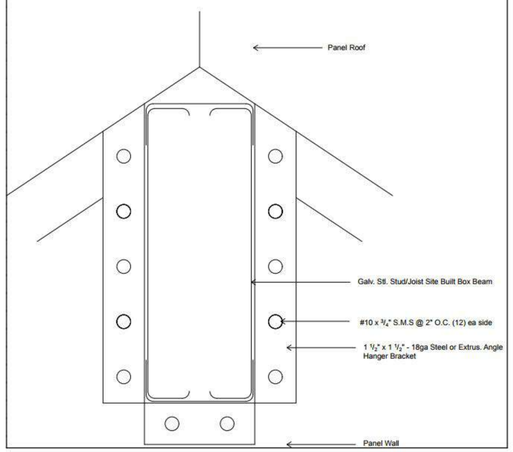

BASE ATTACHMENT DETAIL

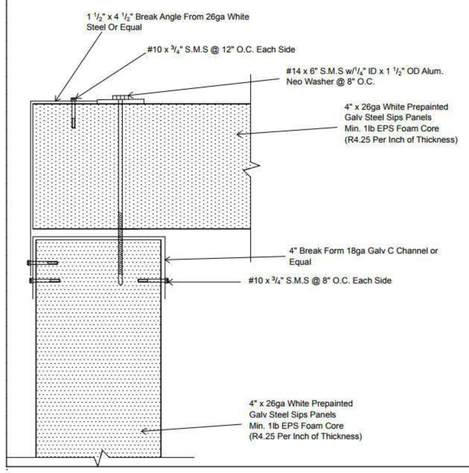

FASCIA DETAIL

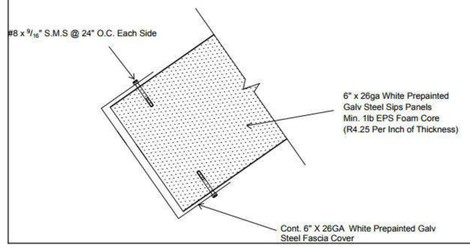

GARAGE HEADER DETAIL

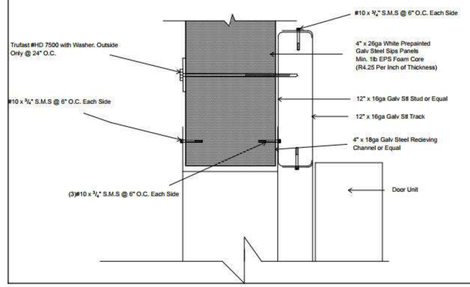

PANEL ROOF FINISH ASPHALT SHINGLES

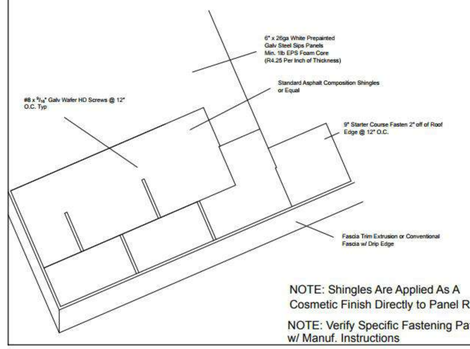

NOTE: Shingles Are Applied As A Cosmetic Finish Directly to Panel Roof

NOTE: Verify Specific Fastening Pattern w/ Manuf. Instructions

TYPICAL DOOR HEADER/JAMB DETAIL

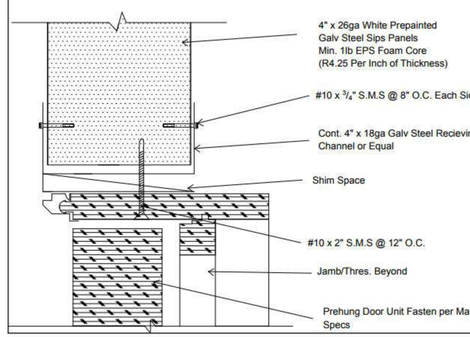

ROOF HIP BEAM

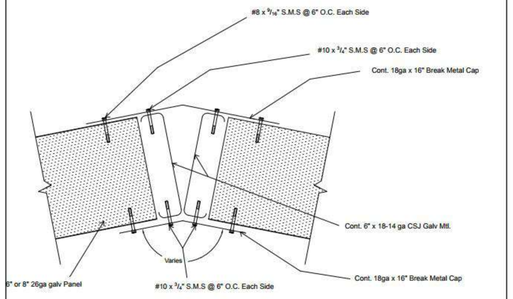

BREAK METAL CAP PITCH VARIES WITH ROOF PITCH AND ROOM DIMENSIONS

Roof Panel to Ridge Beam Attachment Detail

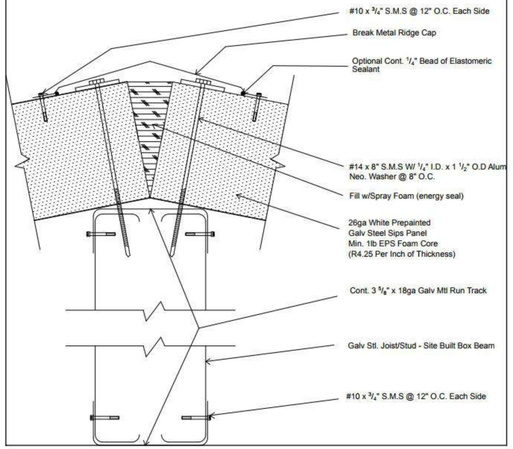

PermaTherm
Insulation Innovation

269 Industrial Park Rd.
Monticello, GA 31064
[p] (706) 468-7500
[f] (706) 468-7510
[e] info@permatherm.net

EPS Insulated Panels

Maximum Spans for Uniform Loads

(Units in Feet for 26-Gauge Steel Panel Skins)

Core Thickness	Total Uniform Load (lb/sq ft)						
	5	10	20	30	40	50	60
2 inch	18	13	9	7	6	5	3
3 inch	22	16	10	9	6	5	4
4 inch	25	18	13	10	8	7	6
5 inch	30	22	15	12	9	8	7
6 inch	32	23	16	13	10	9	8
8 inch	36	25	19	15	12	11	10
10 inch	41	29	20	17	14	12	11

**Uniform Load Spans based on the following: face wrinkling with a safety factor of 2; deflection of L/240 of span; or core shear with a safety factor of 5. Uniform Load Spans are rounded to the lower footage.*

** All values are calculated using core material of Type 1 (1 lb. Density) EPS Foam. Greater values can be reached with higher density foam which is available.*

Other Guidelines

PermaTherm Architectural Insulating Panels are designed to carry specified total loads, with maximum computed buckling stress not to exceed the maximum allowable buckling stress of the facings.

The inside face of all panels must be cut at girt attachments to avoid compression bucking of the exterior skin.

Wherever interior panel skins are extended to the outside (warm side) surface, a thermal break must be cut to avoid thermal conductivity.

Block panel packages should be stored above ground to keep out of water provide drainage.

Contents and logo are property of PermaTherm, Inc.
All rights reserved. Copyright 20106

TYPICAL WINDOW-HEADER/JAMB/SILL DETAIL

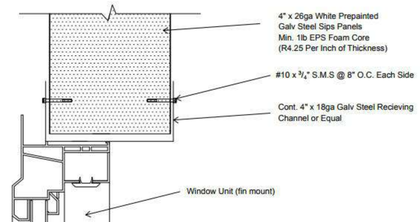

Panel Roof Finish - Metal Roof

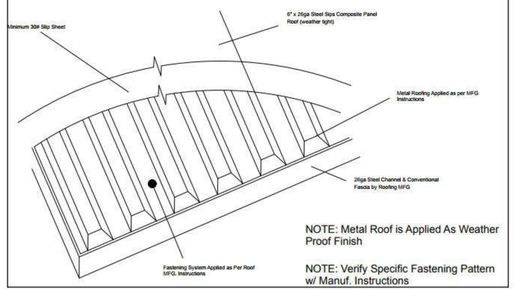

NOTE: Metal Roof is Applied As Weather Proof Finish

NOTE: Verify Specific Fastening Pattern w/ Manuf. Instructions

SIP Panel interior furring, electric, finish, connections

GIST RD. SFR 2

APN544-23-042; PROPOSED ADDRESS: 20599 GIST RD, LOS GATOS, CA 95033

REVISION HISTORY

S3DA Structural & Architectural Design
4196 Adams Ave. San Diego CA 92116
(619) 404-0220

Mr. Nader Moavenian
nader.m@s3da-design.com

REGISTERED PROFESSIONAL ENGINEER
BARRETT CROOK
C 057198
Exp. 12-31-2021
CIVIL
STATE OF CALIFORNIA

2-11-2020

1. The contractor must check all dimensions on-site before commencing work

2. These drawings are to be read in conjunction with all relevant designer, engineer or specialist drawings and specifications

3. The contractor is responsible for providing all necessary temporary support to the building and any adjacent structures

COUNTY APPROVAL STAMP

REVISION DATE
01/02/21

DRAWING NAME
152 SFR2. Structrual Steel Insulated Panels

Drawing Scale

H2-S18

The CAD detail library is intended to provide general framing details only and does not replace the judgments and designs of a qualified architect and/or engineer. The details are provided as a starting tool to assist the user in creating and detailing cold-formed steel framing construction details. Each detail including accompanying text must be thoroughly evaluated and approved by a qualified architect or engineer. | Find over 500 CAD details at cad.clarkdietrich.com | © Copyright 2015 ClarkDietrich Building Systems

NOTES:
1) ATTACH SHEATHING TO BLOCKING W/(4) #8 SCREWS OR EQUIVALENT.
2) BLOCK LENGTH SHALL BE 1/8" (MIN.) TO 1" (MAX.) SHORTER THAN JOIST SPACE.
3) SPACE BLOCKS @ 12'o.c. (MAX.), AND EA. END OF JOIST RUN.

TABLE T.1

SUPPORT TYPE	SUGGESTED FASTENER
STRUCTURAL STEEL, CONCRETE, OR CMU BEARING	0.145"ø P.D.F.
WOOD	#8(MIN) APPROPRIATE SCREW
LIGHT GAUGE METAL FRAMING	#10-16 SCREWS

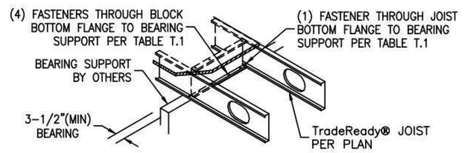

F1220 INT. JOIST BEARING – STANDARD

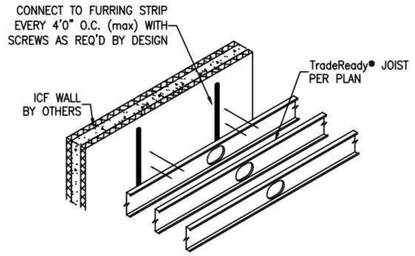

F1155 ICF – JOISTS PARALLEL TO WALL

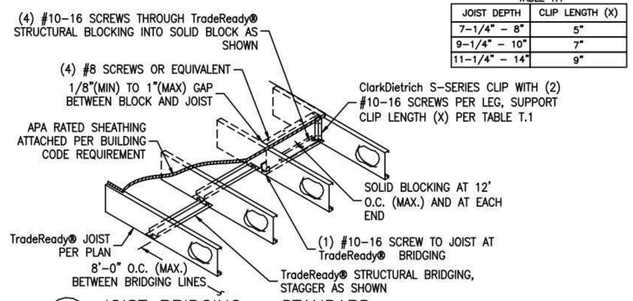

TABLE T.1

JOIST DEPTH	CLIP LENGTH (X)
7-1/4" – 8"	5"
9-1/4" – 10"	7"
11-1/4" – 14"	9"

F2100 JOIST BRIDGING – STANDARD

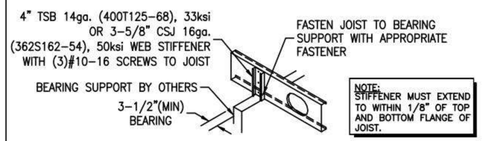

NOTE: STIFFENER MUST EXTEND TO WITHIN 1/8" OF TOP AND BOTTOM FLANGE OF JOIST.

F1300 WEB STIFFENER – STANDARD

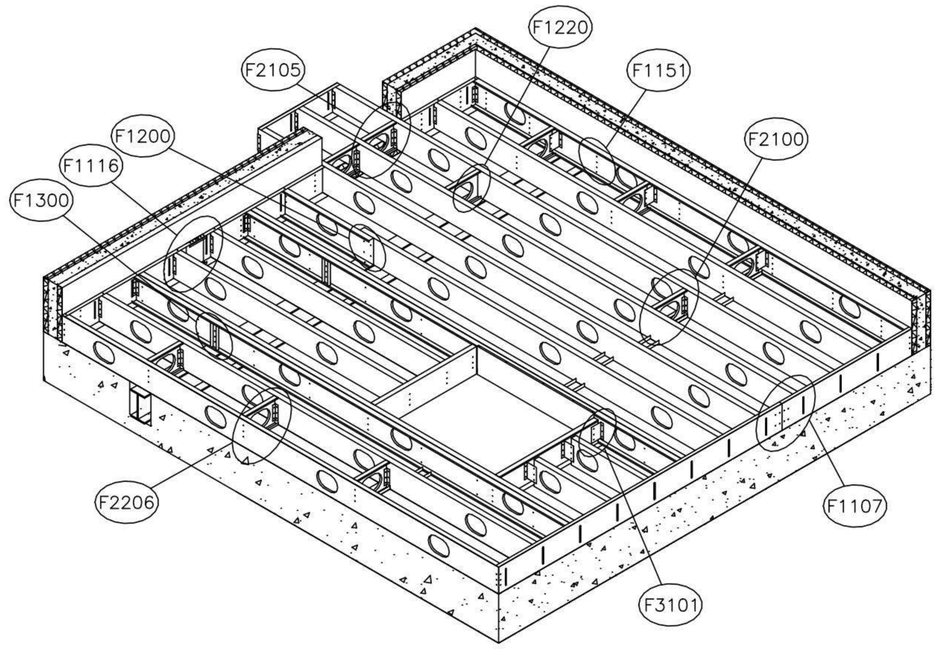

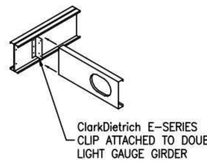

NOTES:
1) ClarkDietrich E-SERIES SUPPORT CLIP, CLIP GAUGE AND FASTENERS AS REQUIRED BY DESIGN.
2) SUPPORT CLIP LENGTH PER TABLE T.1.

TABLE T.1

JOIST DEPTH	CLIP LENGTH (X)
7-1/4" – 8"	5"
9-1/4" – 10"	7"
11-1/4" – 14"	9"

F3101 SUPPORT CLIP – ClarkDietrich E-SERIES

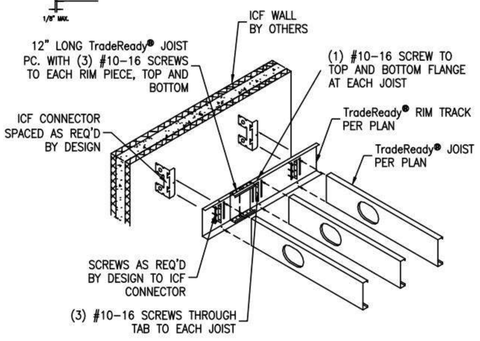

F1116 JOIST RIM – RIM SPLICE – ICF

NOTE: LOAD BEARING WALL FRAMING ABOVE AND BELOW MUST ALIGN WITH JOISTS, OTHERWISE E.O.R. REVIEW REQUIRED TO VERIFY WALL LOAD IS TRANSFERRED AT JOIST LOCATIONS.

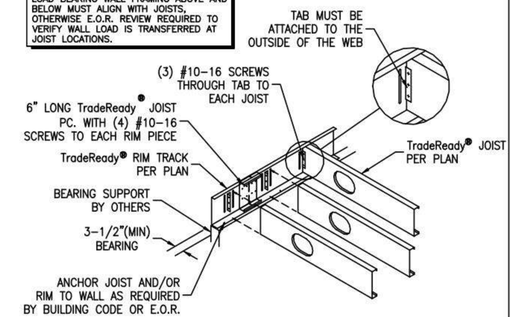

F1107 JOIST RIM – RIM SPLICE

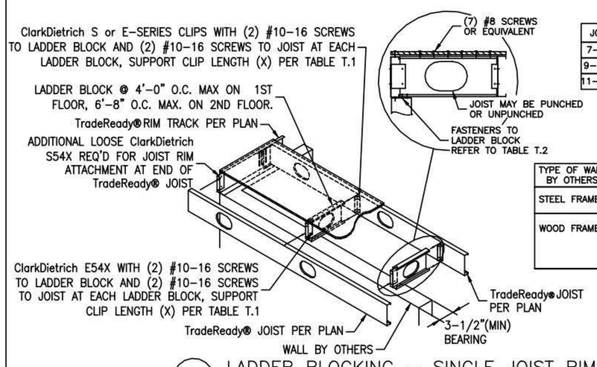

TABLE T.1

JOIST DEPTH	CLIP LENGTH (X)
7-1/4" – 8"	5"
9-1/4" – 10"	7"
11-1/4" – 14"	9"

TABLE T.2

TYPE OF WALL BY OTHERS	(#) OF FASTENERS
STEEL FRAMED	(4) #10-16 SCREWS MIN. SPACING & EDGE DIST.= 1/2"
WOOD FRAMED	(5) COMMON NAILS #8d OR #8 WOOD SCREWS (1-1/2") MIN. EDGE DIST.= 1/2"o.c. SPACING= 1/2"o.c.

F2206 LADDER BLOCKING – SINGLE JOIST RIM

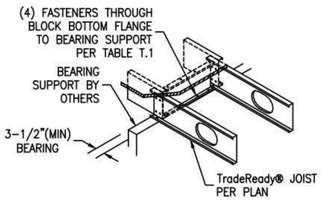

NOTES:
1) ATTACH BLOCKING TO SHEATHING W/(4) #8 SCREWS OR EQUIVALENT.
2) BLOCK LENGTH SHALL BE 1/8" (MIN.) TO 1" (MAX.) SHORTER THAN JOIST SPACE.
3) SPACE BLOCKS @ 12'o.c. (MAX.), AND EA. END OF JOIST RUN.
4) USE (4) # 10-16 SCREWS AS SHOWN AT JOIST LAP.

TABLE T.1

SUPPORT TYPE	SUGGESTED FASTENER
STRUCTURAL STEEL, CONCRETE, OR CMU BEARING	0.145"ø P.D.F.
WOOD	#8(MIN) APPROPRIATE SCREW
LIGHT GAUGE METAL FRAMING	#10-16 SCREWS

F1200 JOIST LAP – STANDARD

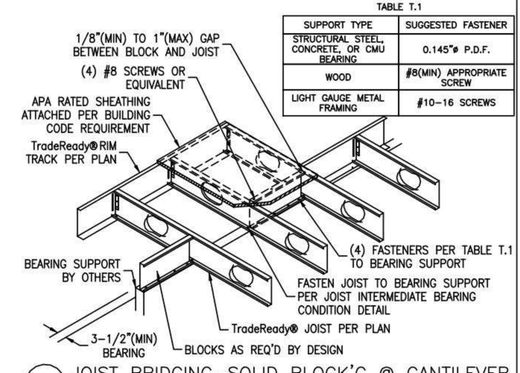

TABLE T.1

SUPPORT TYPE	SUGGESTED FASTENER
STRUCTURAL STEEL, CONCRETE, OR CMU BEARING	0.145"ø P.D.F.
WOOD	#8(MIN) APPROPRIATE SCREW
LIGHT GAUGE METAL FRAMING	#10-16 SCREWS

F2105 JOIST BRIDGING–SOLID BLOCK'G @ CANTILEVER

TradeReady® FLOOR JOIST SYSTEM REFERENCE PLAN

Engineering Services: (877) 832-3206 Technical Services: (888) 437-3244

ClarkDietrich BUILDING SYSTEMS
9100 Centre Pointe Dr. West Chester, OH 45069
Suite 210 Phone: (513) 870-1100

GIST RD. SFR 2

APN544-23-042; PROPOSED ADDRESS: 20599 GIST RD, LOS GATOS, CA 95033

REVISION HISTORY

S3DA Structural & Architectural Design
4196 Adams Ave. San Diego CA 92116
(619) 404-0220
Mr. Nader Moavenian
nader.m@s3da-design.com

REGISTERED PROFESSIONAL ENGINEER BARRETT CROOK C 057186 Exp. 12-31-2021 CIVIL STATE OF CALIFORNIA
2-11-2020

1. The contractor must check all dimensions on-site before commencing work
2. These drawings are to be read in conjunction with all relevant designer, engineer or specialist drawings and specifications
3. The contractor is responsible for providing all necessary temporary support to the building and any adjacent structures

COUNTY APPROVAL STAMP

REVISION DATE
01/02/21

DRAWING NAME
153 SFR2. TradeReady® CFS Joist System Details

H2-S19

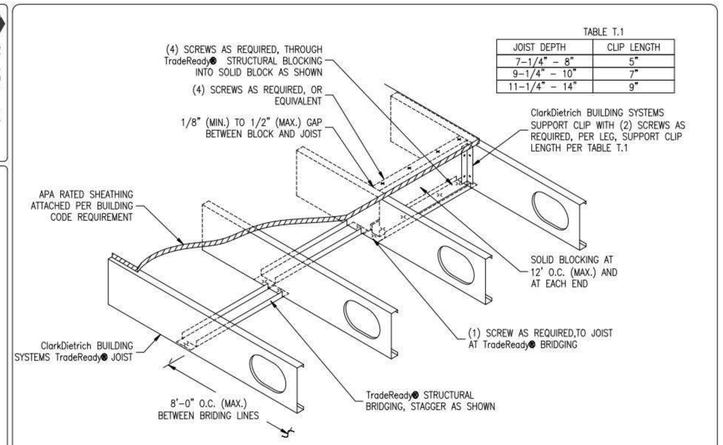

TABLE T.1

JOIST DEPTH	CLIP LENGTH
7-1/4" - 8"	5"
9-1/4" - 10"	7"
11-1/4" - 14"	9"

1 TradeReady® STRUCTURAL BRACING DETAIL
ClarkDietrich TradeReady Floor Joist System

ClarkDietrich 2020 Clark Pointe Dr. Near Cleves, OH 45002 Phone: (513) 870-2000
TradeReady® FLOOR DETAILS Engineering Services: (877) 832-3206 Technical Services: (888) 437-3244
DRAWING: F1201
The CAD detail library is intended to provide general framing details only and does not replace the judgments and designs of a qualified architect and/or engineer. The details are provided as a starting tool to assist the user in creating and detailing cold-formed steel framing construction details. Each detail including accompanying text must be thoroughly evaluated and approved by a qualified architect or engineer. | Find over 500 CAD details at cad.clarkdietrich.com | © Copyright 2015 ClarkDietrich Building Systems

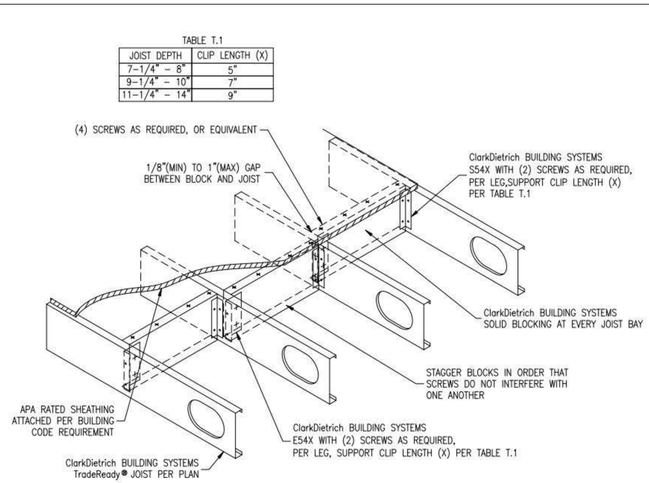

TABLE T.1

JOIST DEPTH	CLIP LENGTH (X)
7-1/4" - 8"	5"
9-1/4" - 10"	7"
11-1/4" - 14"	9"

F2104 JOIST BRIDGING – SOLID BLOCKING
ClarkDietrich TradeReady Floor Joist System

ClarkDietrich 2020 Clark Pointe Dr. Near Cleves, OH 45002 Phone: (513) 870-2000
TradeReady® FLOOR DETAILS Engineering Services: (877) 832-3206 Technical Services: (888) 437-3244
DRAWING: F2104
The CAD detail library is intended to provide general framing details only and does not replace the judgments and designs of a qualified architect and/or engineer. The details are provided as a starting tool to assist the user in creating and detailing cold-formed steel framing construction details. Each detail including accompanying text must be thoroughly evaluated and approved by a qualified architect or engineer. | Find over 500 CAD details at cad.clarkdietrich.com | © Copyright 2015 ClarkDietrich Building Systems

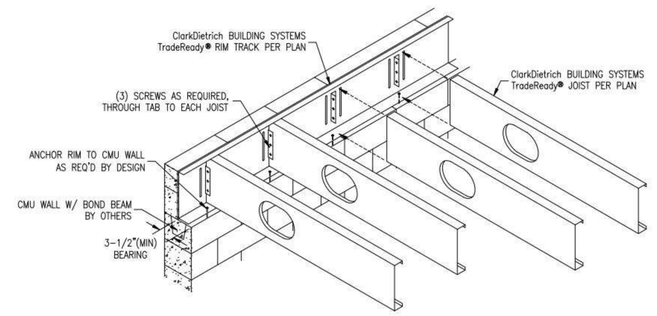

F1112 JOIST RIM – CMU WALL – STANDARD
ClarkDietrich TradeReady Floor Joist System

ClarkDietrich BUILDING SYSTEMS 2020 Clark Pointe Dr. Near Cleves, OH 45002 Phone: (513) 870-2000
TradeReady® FLOOR DETAILS Engineering Services: (877) 832-3206 Technical Services: (888) 437-3244
DRAWING: F1112
The CAD detail library is intended to provide general framing details only and does not replace the judgments and designs of a qualified architect and/or engineer. The details are provided as a starting tool to assist the user in creating and detailing cold-formed steel framing construction details. Each detail including accompanying text must be thoroughly evaluated and approved by a qualified architect or engineer. | Find over 500 CAD details at cad.clarkdietrich.com | © Copyright 2015 ClarkDietrich Building Systems

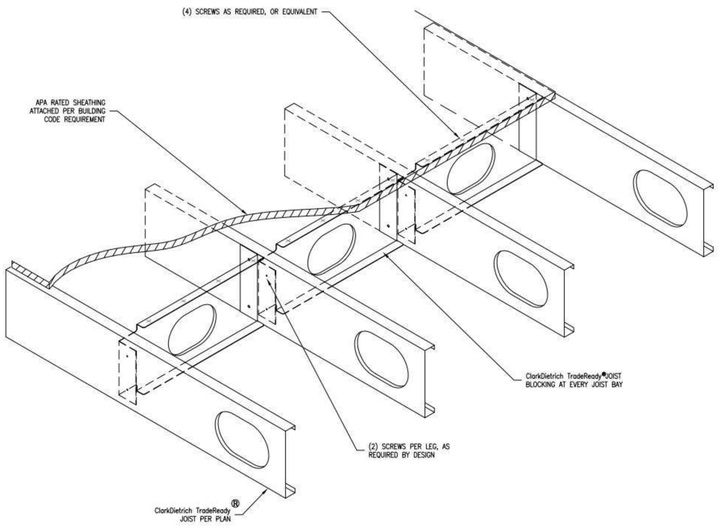

FLOOR JOIST BLOCKING
ClarkDietrich TradeReady FLOOR JOIST SYSTEM

NOTE:
LOAD BEARING WALL FRAMING ABOVE AND BELOW MUST ALIGN WITH JOISTS, OTHERWISE E.O.R. REVIEW REQUIRED TO VERIFY WALL LOAD IS TRANSFERRED AT JOIST LOCATIONS.

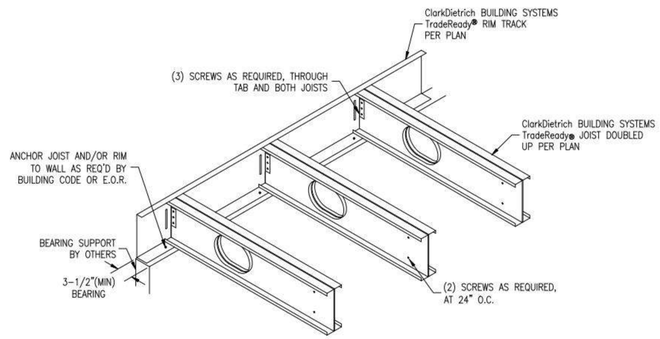

F1103 JOIST RIM – DOUBLE JOISTS
ClarkDietrich TradeReady Floor Joist System

TradeReady® FLOOR DETAILS Engineering Services: (877) 832-3206 Technical Services: (888) 437-3244
DRAWING: F1103
The CAD detail library is intended to provide general framing details only and does not replace the judgments and designs of a qualified architect and/or engineer. The details are provided as a starting tool to assist the user in creating and detailing cold-formed steel framing construction details. Each detail including accompanying text must be thoroughly evaluated and approved by a qualified architect or engineer. | Find over 500 CAD details at cad.clarkdietrich.com | © Copyright 2015 ClarkDietrich Building Systems

GIST RD. SFR 2

APN544-23-042; PROPOSED ADDRESS: 20599 GIST RD, LOS GATOS, CA 95033

REVISION HISTORY

S3DA Structural & Architectural Design
4196 Adams Ave. San Diego CA 92116
(619) 404-0220

Mr. Nader Moavenian
nader.m@s3da-design.com

REGISTERED PROFESSIONAL ENGINEER BARRETT CROOM CIVIL STATE OF CALIFORNIA
C 057196 Exp. 12/31/202
2-11-2020

1. The contractor must check all dimensions on-site before commencing work

2. These drawings are to be read in conjunction with all relevant designer, engineer or specialist drawings and specifications

3. The contractor is responsible for providing all necessary temporary support to the building and any adjacent structures

COUNTY APPROVAL STAMP

REVISION DATE
01/02/21

DRAWING NAME
154 SFR2. TradeReady® CFS Joist System Details

H2-S20

Best Management Practices and Erosion Control Details Sheet 1
County of Santa Clara

3 Stabilized Construction Entrance/Exit

CASQA Detail TC-1

1 Silt Fence

CASQA Detail SE-1

NOTES:

1. Construction the length of each reach so that the change is base elevation along the reach does not exceed 1/3 the height of the linear barrier, in no case shall the reach length exceed 500'
2. The last 8'–0" at fence shall be turned up slope.
3. Stake dimensions are nominal.
4. Dimension may very to fit field condition.
5. Stakes shall be space at 8'–0" maximum and shall be positioned on downstream side of fence.
6. Stake shall be overlap driven tightly together to prevent potential flow–through of sediment at joint. The top of stake shall be secure with wire.
7. For end stake, fence fabric shall be folded around two stakes one full turn and secured with 4 stable.
8. Minimum 4 staples per stake. Dimensions shown are typical.
9. Cross barriers shall be a minimum of 1/3 a maximum at 1/2 the height of the linear barrier.
10. Maintenance openings shall be constructed in a manner to ensure sediment remains behind silt fence.
11. Joining sections shall not be placed at sump locations.
12. Sandbag rows and layers shall be offset to eliminate gaps.

4 Velocity Dissipation Devices

CASQA Detail EC-10

* Length per ABAG Design Standards

2 Silt Fence

CASQA Detail SE-1

Source for Graphics: California Stormwater BMP Handbook, California Stormwater Quality Association, January 2003.
Available from www.cabmphandbooks.com.

STANDARD BEST MANAGEMENT PRACTICE NOTES

1. Solid and Demolition Waste Management: Provide designated waste collection areas and containers on site away from streets, gutters, storm drains, and waterways, and arrange for regular disposal. Waste containers must be watertight and covered at all times except when waste is deposited. Refer to Erosion & Sediment Control Field Manual, 4th Edition (page C3) or latest. Hazardous Waste Management: Provide proper handling and
2. Disposal of hazardous wastes by a licensed hazardous waste material hauler. Hazardous wastes shall be stored and properly labeled in sealed containers constructed of suitable materials. Refer to Erosion & Sediment Control Field Manual, 4th Edition (pages C–5 to C–6) or latest.
3. Spill Prevention and Control: Provide proper storage areas for liquid and solid materials, including chemicals and hazardous substances, away from streets, gutters, storm drains, and waterways. Spill control materials must be kept on site where readily accessible. Spills must be cleaned up immediately and contaminated soil disposed properly. Refer to Erosion & Sediment Control Field Manual, 4th Edition (pages C–7 to C–8, C–13 to C–14) or latest. Vehicle and Construction Equipment Service and Storage:
4. An area shall be designated for the maintenance, where on– site maintenance is required, and storage of equipment that is protected from stormwater run–on and runoff. Measures shall be provided to capture any waste oils, lubricants, or other potential pollutants and these wastes shall be properly disposed of off site. Fueling and major maintenance/repair, and washing shall be conducted off–site whenever feasible. Refer to Erosion & Sediment Control Field Manual, 4th Edition (page C9) or latest.
5. Material Delivery, Handling and Storage: In general, materials Should not be stockpiled on site. Where temporary stockpiles are necessary and approved by the County, they shall be covered with secured plastic sheeting or tarp and located in designated areas near construction entrances and away from drainage paths and waterways. Barriers shall be provided around storage areas where materials are potentially in contact with runoff. Refer to Erosion & Sediment Control Field Manual, 4th Edition (pages C–11 to C–12) or latest.
6. Handling and Disposal of Concrete and Cement: When Concrete trucks and equipment are washed on–site, concrete wastewater shall be contained in designated containers or in a temporary lined and watertight pit where wasted concrete can harden for later removal. If possible have concrete contractor remove concrete wash water from site. In no case shall fresh concrete be washed into the road right–of–way. Refer to Erosion & Sediment Control Field Manual, 4th Edition (pages C–15 to C–16) or latest.
7. Pavement Construction Management: Prevent or reduce the discharge of pollutants from paving operations, using measures to prevent run–on and runoff pollution and properly disposing of wastes. Avoid paving in the wet season and reschedule paving when rain is in the forecast. Residue from saw–cutting shall be vacuumed for proper disposal. Refer to Erosion & Sediment Control Field Manual, 4th Edition (pages C–17 to C–18) or latest.
8. Contaminated Soil and Water Management: Inspections to identify contaminated soils should occur prior to construction and at regular intervals during construction. Remediating contaminated soil should occur promptly after identification and be specific to the contaminant identified, which may include hazardous waste removal. Refer to Erosion & Sediment Control Field Manual, 4th Edition (pages C–19 to C–20) or latest.
9. Sanitary/Septic Water Management: Temporary sanitary facilities should be located away from drainage paths, waterways, and traffic areas. Only licensed sanitary and septic waste haulers should be used. Secondary containment should be provided for all sanitary facilities. Refer to Erosion & Sediment Control Field Manual, 4th Edition (page C–21) or latest.
10. Inspection & Maintenance: Areas of material and equipment storage sites and temporary sanitary facilities must be inspected weekly. Problem areas shall be identified and appropriate additional and/or alternative control measures implemented immediately, within 24 hours of the problem being identified.

STANDARD EROSION CONTROL NOTES

1. Sediment Control Management: Tracking Prevention & Clean Up: Activities shall be organized and measures taken as needed to prevent or minimize tracking of soil onto the public street system. A gravel or proprietary device construction entrance/exit is required for all sites. Clean up of tracked material shall be provided by means of a street sweeper prior to an approaching rain event, or at least once at the end of each workday that material is tracked, or, more frequently as determined by the County Inspector. Refer to Erosion & Sediment Control Field Manual, 4th Edition (pages B–31 to B–33) or latest.

   Storm Drain Inlet and Catch Basin Inlet Protection: All inlets within the vicinity of the project and within the project limits shall be protected with gravel bags placed around inlets or other inlet protection. At locations where exposed soils are present, staked fiber roles or staked silt fences can be used. Inlet filters are not allowed due to clogging and subsequent flooding. Refer to Erosion & Sediment Control Field Manual, 4th Edition (pages B–49 to B–51) or latest. Storm Water Runoff: No storm water runoff shall be allowed to drain in to the existing and/or proposed underground storm drain system or other above ground watercourses until appropriate erosion control measures are fully installed. Dust Control: The contractor shall provide dust control in graded areas as required by providing wet suppression or chemical stabilization of exposed soils, providing for rapid clean up of sediments deposited on paved roads, furnishing construction road entrances and vehicle wash down areas, and limiting the amount of areas disturbed by clearing and earth moving operations by scheduling these activities in phases. Stockpiling: Excavated soils shall not be placed in streets or on paved areas. Borrow and temporary stockpiles shall be protected with appropriate erosion control measures(tarps, straw bales, silt fences, ect.) to ensure silt does not leave the site or enter the storm drain system or neighboring watercourse.
2. Erosion Control: During the rainy season, all disturbed areas must include an effective combination of erosion and sediment control. It is required that temporary erosion control measures are applied to all disturbed soil areas prior to a rain event. During the non–rainy season, erosion control measures must be applied sufficient to control wind erosion at the site.
3. Inspection & Maintenance: Disturbed areas of the Project's site, locations where vehicles enter or exit the site, and all erosion and sediment controls that are identified as part of the Erosion Control Plans must be inspected by the Contractor before, during, and after storm events, and at least weekly during seasonal wet periods. Problem areas shall be identified and appropriate additional and/ or alternative control measures implemented immediately, within 24 hours of the problem being identified.
4. Project Completion: Prior to project completion and signoff by the County Inspector, all disturbed areas shall be reseeded, planted, or landscaped to minimize the potential for erosion on the subject site.
5. It shall be the Owner's/Contractor's responsibility to maintain control of the entire construction operation and to keep the entire site in compliance with the erosion control plan.
6. Erosion and sediment control best management practices shall be operable year round or until vegetation is fully established on landscaped surfaces.
7. Grading work between October 15 and April 15 is at the discretion of Santa Clara County building official.
8. Exposed slope shall be protected with jute net and/or hydroseed. hydroseed shall be a homogeneously mix of slurry containing not less than 44 lbs organic mulching amendment plus fertilizer, chemical additives and soils for each 100 gallons of water.

APPROVED FOR ISSUANCE
REFER TO ENCROACHMENT AND/OR
CONSTRUCTION PERMIT AND PLAN
COVER SHEET FOR SPECIAL CONDITIONS AND PERMIT NUMBERS

GIST RD. SFR 1

APN544-23-041; PROPOSED ADDRESS: 20555

GIST RD, LOS GATOS, CA 95033

REVISION HISTORY

S3DA Structural & Architectural Design
4196 Adams Ave. San Diego CA 92116
(619) 404-0220

Mr. Nader Moavenian
nader.m@s3da-design.com

REGISTERED PROFESSIONAL ENGINEER
BARRETT CROOK
C 057196
Exp. 12.31.2021
CIVIL
STATE OF CALIFORNIA
2-11-2020

1. The contractor must check all dimensions on-site before commencing work
2. These drawings are to be read in conjunction with all relevant designer, engineer or specialist drawings and specifications
3. The contractor is responsible for providing all necessary temporary support to the building and any adjacent structures

COUNTY APPROVAL STAMP

REVISION DATE
02/11/2020

DRAWING NAME
155 SCC Erosion control. Sht 1

Drawing Scale

C-28

7 Geotextiles and Mats

CASQA Detail EC-7

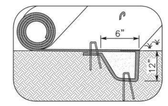

INITIAL CHANNEL ANCHOR TRENCH
NTS

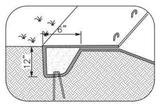

TERMINAL SLOPE AND CHANNEL ANCHOR TRENCH
NTS

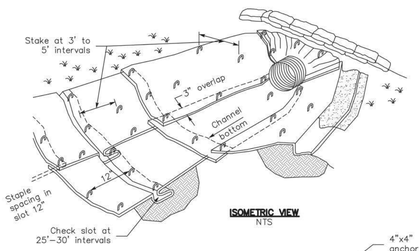

ISOMETRIC VIEW
NTS

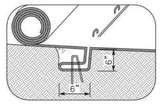

INTERMITTENT CHECK SLOT
NTS

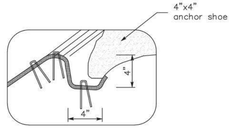

LONGITUDINAL ANCHOR TRENCH
NTS

NOTES:
1. Check slots to be constructed per manufacturers specifications.
2. Staking or stapling layout per manufacturers specifications.
3. Install per manufacturer's recommendations.

TYPICAL INSTALLATION DETAIL

5 Geotextiles and Mats

CASQA Detail EC-7

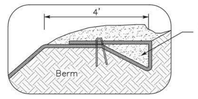

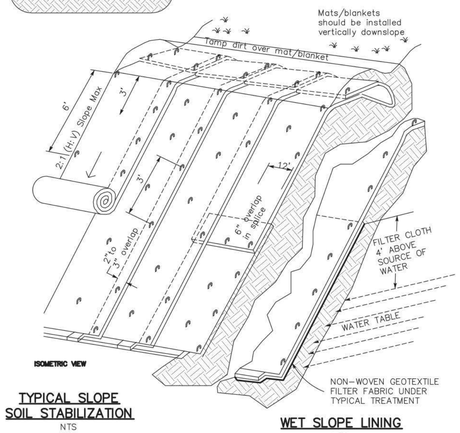

ISOMETRIC VIEW

TYPICAL SLOPE SOIL STABILIZATION
NTS

WET SLOPE LINING
NTS

NOTES:
1. Slope surface shall be free of rocks, clods, sticks and grass. Mats/blankets shall have good soil contact.
2. Lay blankets loosely and stake or staple to maintain direct contact with the soil. Do not stretch.
3. Install per manufacturer's recommendations.

TYPICAL INSTALLATION DETAIL

3 Entrance/Outlet Tire Wash

CASQA Detail TC-3

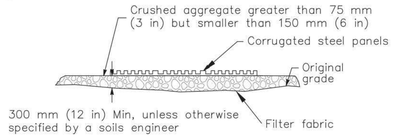

SECTION A-A
NOT TO SCALE

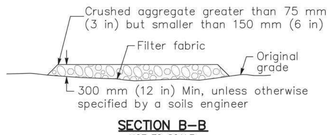

SECTION B-B
NOT TO SCALE

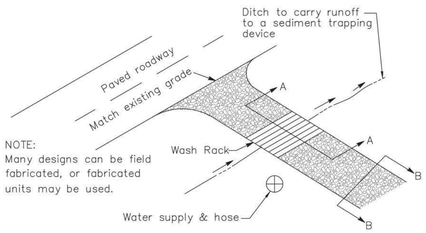

NOTE:
Many designs can be field fabricated, or fabricated units may be used.

TYPICAL TIRE WASH
NOT TO SCALE

1 Fiber Rolls

CASQA Detail SE-5

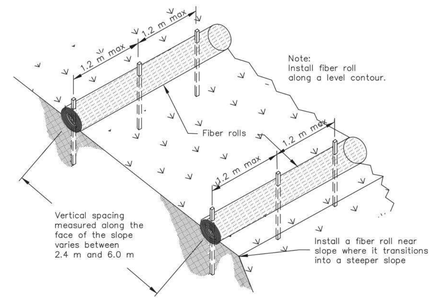

TYPICAL FIBER ROLL INSTALLATION
NOT TO SCALE

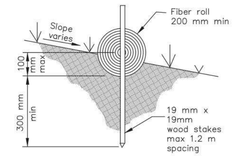

ENTRENCHMENT DETAIL
NOT TO SCALE

8 Storm Drain Inlet Protection

CASQA Detail SE-10

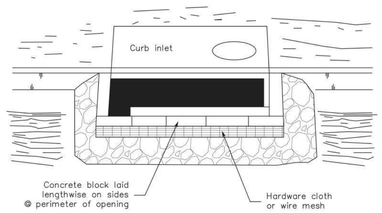

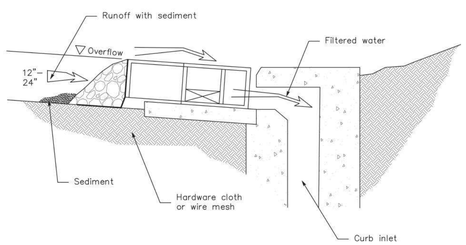

DI PROTECTION – TYPE
NOT TO SCALE

6 Storm Drain Inlet Protection

CASQA Detail SE-10

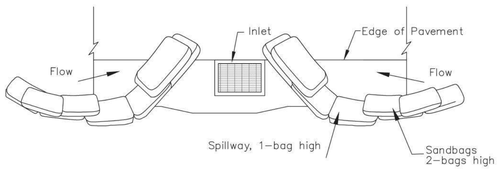

TYPICAL PROTECTION FOR INLET ON SUMP

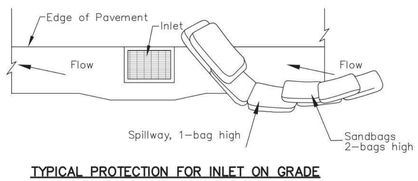

TYPICAL PROTECTION FOR INLET ON GRADE

NOTES:
1. Intended for short-term use.
2. Use to inhibit non-storm water flow.
3. Allow for proper maintenance and cleanup.
4. Bags must be removed after adjacent operation is completed
5. Not applicable in areas with high silts and clays without filter fabric.

4 Storm Drain Inlet Protection

CASQA Detail SE-10

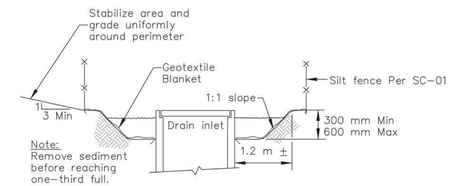

Section A-A

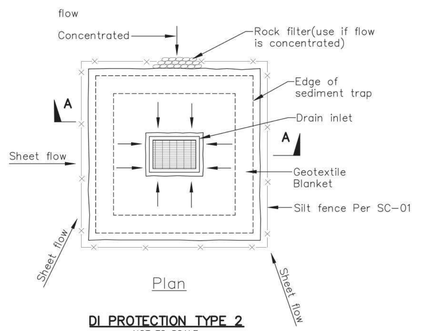

DI PROTECTION TYPE 2
NOT TO SCALE

Notes
1. For use in cleared and grubbed and in graded areas.
2. Shape basin so that longest inflow area faces longest length of trap.
3. For concentrated flows, shape basin in 2:1 ratio with length oriented towards direction of flow.

2 Concrete Waste Management

CASQA Detail WM-8

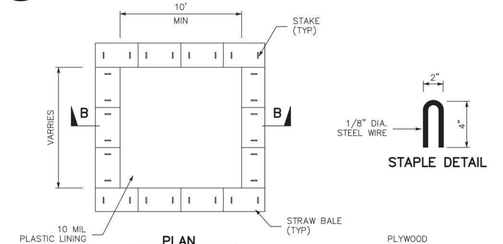

PLAN
NOT TO SCALE
TYPE "ABOVE GRADE" WITH STRAW BALES

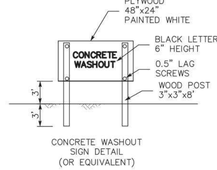

CONCRETE WASHOUT SIGN DETAIL (OR EQUIVALENT)

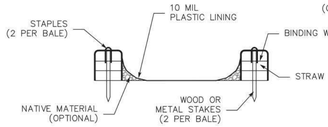

SECTION B-B
NOT TO SCALE

NOTES:

1. ACTUAL LAYOUT DETERMINED IN FIELD.
2. THE CONCRETE WASHOUT SIGN SHALL BE INSTALLED WITHIN 30FT. OF THE TEMPORARY CONCRETE WASHOUT FACILITY.

APPROVED FOR ISSUANCE
REFER TO ENCROACHMENT AND/OR CONSTRUCTION PERMIT AND PLAN COVER SHEET FOR SPECIAL CONDITIONS AND PERMIT NUMBERS

Source for Graphics: California Stormwater BMP Handbook, California Stormwater Quality Association, January 2003.
Available from www.cabmphandbooks.com.

Best Management Practices and Erosion Control Details Sheet 2
County of Santa Clara

GIST RD. SFR 1

APN544-23-041; PROPOSED ADDRESS: 20555 GIST RD, LOS GATOS, CA 95033

REVISION HISTORY

S3DA Structural & Architectural Design
4196 Adams Ave. San Diego CA 92116
(619) 404-0220

Mr. Nader Moavenian
nader.m@s3da-design.com

REGISTERED PROFESSIONAL ENGINEER
BARRETT CROOK FRANK
C 057199
Exp. 12.31.2021
CIVIL
STATE OF CALIFORNIA

2-11-2020

1. The contractor must check all dimensions on-site before commencing work
2. These drawings are to be read in conjunction with all relevant designer, engineer or specialist drawings and specifications
3. The contractor is responsible for providing all necessary temporary support to the building and any adjacent structures

COUNTY APPROVAL STAMP

REVISION DATE
02/11/2020

DRAWING NAME
156 SCC Erosion control. Sht 2

Drawing Scale

C-29