FILE PATH: /Users/modernhousedesignco/Dropbox/000 ARCHICAD FILES/Pangan ArchiCAD/PANGEN_BUILDING_Comments2_ 10062020.pln • LAST SAVED BY: Modern House - Natsumi • • PRINTED ON 4/27/21 @ 3:27 PM
PROJECT COMPANY* • PANGAN RESIDENCE • *** PROJECT NUMBER *** • A0.0



NEW RESIDENCE FOR ROY AND EVAN PANGAN

GENERAL NOTES

COORDINATION

1. IF THESE DRAWINGS ARE NOT 24" x 36" THEY HAVE BEEN REDUCED OR ENLARGED

2. THE STANDARD A.I.A. GENERAL CONDITIONS ARE HEREBY MADE A PART OF THESE DRAWINGS

3. ALL WORK SHALL COMPLY WITH THE 2016 CALIFORNIA RESIDENTIAL CODE , CALIFORNIA MECHANICAL CODE, CALIFORNIA PLUMBING CODE, CALIFORNIA ELECTRICAL CODE, CALIFORNIA ENERGY CODE CALIFORNIA GREEN BUILDING CODE AND CALIFORNIA FIRE CODE

4. ALL DIMENSIONS ARE TO FACE OF STUD OR FACE OF CONCRETE UNLESS OTHERWISE NOTED

5. DO NOT SCALE DRAWINGS FOR DIMENSIONS. WRITTEN DIMENSIONS SHALL TAKE PRECEDENCE OVER SCALED DIMENSIONS

6. DISCREPANCIES BETWEEN THESE DRAWINGS AND ACTUAL SITE CONDITIONS SHALL BE BROUGHT TO THE ATTENTION OF THE ARCHITECT PRIOR TO COMMENCEMENT OF ANY WORK

7. CONTRACTOR SHALL PROVIDE SHOP DRAWINGS AND OR SAMPLE BOARDS TO ARCHITECT PRIOR TO ORDERING AND OR INSTALLATION FOR
-ALL MILLWORK (CUSTOM OR FACTORY PRODUCED) WITH COUNTER MATERIAL
-ALL EXTERIOR WINDOWS/DOORS WITH FIN. SAMPLES
-ALL INTERIOR DOORS WITH FIN. SAMPLES
-WOOD SIDING (CONNECTION AND CORNERS) WITH FIN. SAMPLES
-ALL TILE WORK 12"X12" MOCKUP (INTERIOR AND EXTERIOR)
-EXTERIOR STUCCO 24"X24" MOCKUP
-EXPOSED FLASHING ELEMENTS (SAMPLE)
-EXPOSED ROOFING (SAMPLE)

CONTRACTOR DUTIES

7. THE CONTRACTOR SHALL:

A. FURNISH, PAY FOR, AND FILE ALL NECESSARY PERMITS, FEES, INSPECTIONS, ETC. EXCEPT FOR PLAN CHECK, ZONING, AND SCHOOL FEES WHICH WILL BE PAID FOR BY THE OWNER

B. GUARANTEE ALL WORK FOR ONE YEAR AS EVIDENCED BY THE DATE OF THE FINAL CERTIFICATE OF PAYMENT

C. PROVIDE RELEASE OF ALL SUBCONTRACTOR AND SUPPLIER LIENS BEFORE FINAL PAYMENT IS MADE

D. FILE WORKMAN'S COMPENSATION

E. ARRANGE FOR ALL INSPECTIONS AS CALLED FOR IN SECTION 110 OF THE 2013 CBC

8. CONTRACTOR SHALL INSTALL ALL MATERIALS AND EQUIPMENT IN ACCORDANCE WITH MANUFACTURER'S RECOMMENDATIONS AND ALL APPLICABLE CODES

9. CONTRACTOR SHALL PROTECT EXISTING VEGETATION AND ADJACENT SITE IMPROVEMENTS FROM DAMAGE DURING THE COURSE OF THE WORK

10. CONTRACTOR SHALL BRACE STRUCTURE AS REQUIRED DURING CONSTRUCTION

11. CONTRACTOR SHALL PROVIDE STRICT CONTROL OF JOB CLEANUP TO REMOVE DUST AND DEBRIS FROM CONSTRUCTION AREA

12. ALL SPECIAL INSPECTION AGENCIES, INDIVIDUALS, AND SHOP FABRICATORS SHALL BE APPROVED BY THE BUILDING DEPARTMENT PRIOR TO ANY WORK BEING PERFORMED. CONTRACTOR SHALL SUBMIT ALL DOCUMENTATION FOR APPROVAL

13. CONTRACTOR SHALL PROVIDE PLANS OF GAS LINE SIZING TO THE BUILDING INSPECTION OFFICE PRIOR TO CALLING FOR INSPECTION

GENERAL

14. ALL STAIRS WITH MORE THAN THREE RISERS SHALL HAVE ONE (1) 1-1/4" - 2" DIAMETER HANDRAIL w/ 1-1/2" CLEARANCE FROM THE WALL. ALL RAILS SHALL BE BETWEEN 34" AND 38" ABOVE NOSING OF THE TREAD AND BE CONTINUOUS FROM THE TOP RISER TO THE BOTTOM RISER -- 2016 CRC SEC.311

15. GUARDRAILS SHALL BE A MINIMUM OF 42" IN HEIGHT AND DESIGNED SUCH THAT A 4" SPHERE CANNOT PASS THROUGH ANY OPENING -- 2016 CRC SEC. R311.7

16a. FIREBLOCKING AND DRAFTSTOPPING SHALL BE PROVIDED IN ALL LOCATIONS IN ACCORDANCE w/ 2016 CRC SEC. R302 (1)

16b. WHERE THE ROOF PROFILE ALLOWS A SPACE BETWEEN THE ROOF COVERING AND ROOF DECKING, THE SPACE SHALL BE CONSTRUCTED TO PREVENT THE INTRUSION OF FLAMES AND EMBERS, BE FIRESTOPPED WITH APPROVED MATERIALS OR HAVE ONE LAYER OF MINIMUM 72 POUNDS MINERAL-SURFACED NON-PERFORATED CAP SHEET INSTALLED OVER THE COMBUSTIBLE DECKING PER CRC R337.5.2.

16c. WHERE VALLEY FLASHING IS INSTALLED, THE FLASHING SHALL NOT BE LESS THAN NO. 26 GAGE GALVANIZED SHEET CORROSION-RESISTANT METAL INSTALLED OVER NOT LESS THAN ON LAYER OF MINIMUM 72-POUND MINERAL-SURFACED NON-PERFORATED CAP SHEET, AT LEAST 36 INCH WIDE RUNNING THE FULL LENGTH OF THE VALLEY PER CRC R337.5.3.

17. HEARTHS SHALL EXTEND 20" IN FRONT AND 12" BEYOND EACH SIDE OF FIREPLACE OPENING

18. FIREPLACE SHALL HAVE TIGHT FITTING METAL OR GLASS DOOR AND OUTSIDE AIR INTAKE WITH DAMPER AND CONTROL

19. ALL GLAZING SUBJECT TO HUMAN IMPACT SHALL BE TEMPERED -- 2016 CRC SECTIONS R308/R327.8

ENERGY

20. THIS BUILDING MEETS THE ENERGY BUILDING DESIGN REQUIREMENTS OF TITLE 24 PART 6. SEE ATTACHED TITLE 24 FOR CERTIFICATE OF COMPLIANCE.

21. ALL WINDOWS AND DOORS SHALL BE DOUBLE GLAZED U.O.N.

22. FOR PROJECTS IN CALIFORNIA:

A. INSULATION SHALL MEET THE CALIFORNIA ENERGY COMMISSION (C.E.C.) QUALITY STANDARDS AND BE CERTIFIED BY THE MANUFACTURER.

B. ALL FREEZERS, REFRIGERATORS, AND FLUORESCENT LAMP BALLASTS SHALL BE CERTIFIED BY THE C.E.C.

C. ALL HVAC EQUIPMENT, WATER HEATERS, FAUCETS, AND SHOWER HEADS SHALL BE CERTIFIED BY THE C.E.C.

23. ALL TOILETS ARE TO BE ULTRA LOW FLOW 1.28 GALLONS MAXIMUM FLUSH CAPACITY PER 2016 CPC 402.2

24. THERMOSTATS SHALL BE OF A PROGRAMMABLE DUAL SET BACK TYPE.

25. WATER HEATER SHALL BE INSULATED WITH R-12 BLANKET AND PIPES WITHIN FIRST FIVE FEET OF TANK WITH R-4

26. GENERAL LIGHTING IN KITCHENS AND BATHS SHALL BE HIGH EFFICACY & COMPLY w/ TITLE 24 CALCULATIONS

LIFE SAFETY

27. WHERE REQUIRED BY LOCAL JURISDICTIONS, BUILDINGS TO BE FULLY SPRINKLERED IN ACCORDANCE w/ 2016 CRC SEC. R313/R309.6 AND 2013 NFPA . DRAWINGS TO BE SUBMITTED FOR PERMIT BY DESIGN/BUILD SUBCONTRACTOR

28. SMOKE DETECTORS SHALL BE HARD-WIRED IN CEILINGS AND EQUIPPED w/ A BATTERY BACKUP. SEE REFLECTED CEILING AND MECHANICAL PLANS FOR EXACT LOCATIONS -- 2016 CRC SEC.314

29. WHERE SMOKE DETECTORS TO BE WIRED FOR 24 HOUR MONITORING BY REMOTE ANSWERING STATION PER NFPA 72

MEP

30. ALL GAS APPLIANCES SHALL HAVE GAS IGNITER TYPE PILOTS AND INTERMITTENT IGNITION DEVICES

31. CLOTHES DRYERS SHALL BE VENTED TO THE OUTSIDE. PROVIDE BACKDRAFT DAMPER

32. WATER HEATERS SHALL BE SECURELY FASTENED TO PREVENT OVERTURNING AS DETAILED ON DRAWING 2/A8.1 -- 2016 CRC R301.2.2.3.7

33. ALL HOT WATER FAUCETS WITH 10 FEET OR MORE OF PIPE BETWEEN FAUCET AND WATER HEATER ARE TO BE EQUIPPED WITH HOT WATER RECIRCULATING SYSTEM

34. ALL SHOWERS AND TUB-SHOWER COMBINATIONS SHALL BE PROVIDED WITH INDIVIDUAL CONTROL VALVES OF THE PRESSURE BALANCE OR THE THERMOSTATIC MIXING VALVE TYPE

35. ALL HOSE BIBBS SHALL HAVE APPROVED NON-REMOVABLE BACKFLOW PREVENTION DEVICES -- 2016 CRC AP103.3

36. DUCTS SHALL BE CONSTRUCTED, INSTALLED AND INSULATED PER 2010 CMC

37. EXHAUST SYSTEMS SHALL HAVE DAMPER CONTROLS

38. ALL ELECTRICAL OUTLETS IN EXTERNAL WALLS SHALL HAVE INSULATING GASKETS

39. NO LIGHT FIXTURES IN CLOTHES CLOSETS SHALL BE CLOSER THAN 12" TO COMBUSTIBLE STORAGE ITEMS -- 2016 CRC

40. ALL 120V / 1-PH / 15- & 20- AMP BRANCH CIRCUITS IN BEDROOMS SHALL BE PROTECTED BY A LISTED ARC-FAULT CIRCUIT INTERRUPTER -- 2016 CEC ARTICLE 210.12

41. HYRO RADIANT, CONTRACTOR SHALL DOCUMENT AND PROVIDE DIMENSIONED DRAWING/ WITH PICTURES OR VIDEO FOR THE OWNER SHOWING LOCATIONS OF ALL IN FLOOR HYRO-RADIANT TUBING.

FRAMING PLANS AND LIGHTING COORDINATION

1. CONTRACTOR SHALL REVEIW ALL RCP/LIGHTING PLANS PRIOR TO SETTING FLOOR/ROOF JOIST MEMBERS TO ALLOW FOR LIGHTING PLACEMENT AS SHOWN, CONTRACTOR SHALL SPOT LOCATE (PAINT OR OTHER MEANS) ALL RECESSED FIXTURES AND NOTIFY THE ARCHITECT FOR A WALK THRU PRIOR TO SETTING OF CANS IN PERMANENT LOCATION.

ARCHITECT SHALL HAVE ACCESS TO THE SITE AT ALL TIMES

PRIOR TO BUILDING PERMIT FINAL APPROVAL, THE PROPERTY SHALL BE IN A COMPLIANCE WITH THE VEGETATION MANAGEMENT REQUIREMENTS PRESCRIBED IN CALIFORNIA FIRE CODE SECTION 4906, INCLUDING CALIFORNIA PUBLIC RESOURCES CODE 4291 OR CALIFORNIA GOVERNMENT CODE SECTION 51182 PER CRC R337.1.5. (1)

SYMBOLS

- GRID LINE - F.O.S. UNLESS OTHERWISE NOTED
- DIMENSION TO FACE OF FRAMING
- DIMENSION TO CENTERLINE
- DIMENSION TO FACE OF FINISH
- DETAIL REFERENCE SHEET LOCATION
- INTERIOR ELEVATION KEY AND SHEET LOCATION
- DOOR NUMBER, SEE DOOR SCHEDULE
- WINDOW NUMBER, SEE WINDOW SCHEDULE
- ELEVATION DATUM POINT
- CROSS SECTION SHEET LOCATION
- EXTERIOR ELEVATION
- SPOT ELEVATION
- DRAWING KEYNOTE
- MATCH LINE
- DRAWING REVISION

PROJECT DATA

LOCATION:	AUGUSTA CT MILPITAS, CA 95035
APN:	029-35-005
ZONING:	HS-d2
LOT SIZE:	1,688,821.20 SQ. FT. (38.77 ACRES)
BLDG USE:	SINGLE FAMILY
OCCUPANCY GROUP:	R-3/U
CONSTRUCTION TYPE	TYPE VB
CLIMATE ZONE:	NA
BLDG. CODE:	2016 CALIFORNIA BUILDING, RESIDENTIAL, PLUMBING, ELECTRICAL, ENERGY, GREEN BUILDING STANDARDS, FIRE AND MECHANICAL CODES
ITEMS TO BE UNDER SEPARATE PERMIT(S):	AUTOMATED FIRE SPRINKLER, SOLAR WATER HEATING SYSTEM (1)
PROJECT SCOPE:	NEW SINGLE FAMILY

SEE SITE PLAN SHEET A1.0 FOR FLOOR AREA CALCULATIONS

(1)

DIRECTORY

OWNER:	ROY AND EVAN PANGAN 2767 BELMONT TR FREMONT CALIFORNIA 94539 Tel: EMAIL:
ARCHITECT:	MODERN HOUSE ARCHITECTS 1265 INDIANA STREET SAN FRANCISCO CALIFORNIA 94107 TEL: (415) 596-7281 EMAIL: MODERNHOUSE@MAC.COM
GENERAL CONTRACTOR:	TBD
STRUCTURAL ENGINEER:	SFA DESIGN GROUP 1813 RUTAN DR, SUITE C LIVERMORE, CALIFORNIA 94551 TEL: 503.641.8311 WWW.SFADG.COM
LANDSCAPE ARCHITECT:	FIELD LANDSCAPE DESIGN 1265 INDIANA STREET SAN FRANCISCO, CA 94107 TEL: (415) 926-5775 EMAIL: chrisyatesdesign@gmail.com
CIVIL/SURVEY:	WESTFALL ENGINEERS, INC. 14583 BIG BASIN WAY SARATOGA, CA 95070 TEL: (408) 867-0244 EMAIL: jitka@westf.com
GEOTECHNICAL ENGINEER:	EARTH SYSTEMS 48511 WARM SPRING BLVD., SUITE 210 FREMONT, CA 94539 (510) 353-3833 WWW.EARTHSYSTEMS.COM

VICINITY MAP

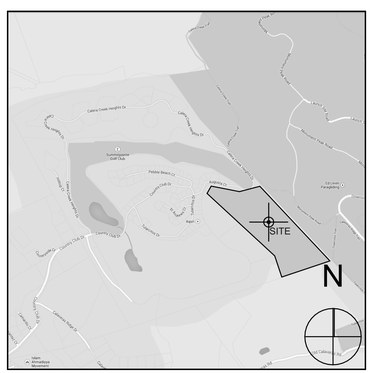

DRAWING INDEX

CIVIL DRAWINGS

BMP-1	BEST MANAGEMENT PRACTICES
BMP-2	BEST MANAGEMENT PRACTICES
C1	CIVIL COVER SHEET
C2	IMPROVEMENT PLAN
C3	IMPROVEMENT PLAN
C4	IMPROVEMENT PLAN
C5	IMPROVEMENT PLAN
C6	GRADING AND DRAINAGE PLAN
C7	SECTIONS
C8	SECTIONS
C9	EROSION CONTROL PLAN
C10	DETAILS
C11	SEPTIC SYSTEM DESIGN
C12	ACCESS DRIVEWAY
C13	ACCESS DRIVEWAY (1)
C14	EXTERIOR RETAINING WALLS (2)

IRRIGATION PLAN

I-1	IRRIGATION PLAN
I-2	IRRIGATION LEGEND AND NOTES
I-3	IRRIGATION DETAILS 1
I-4	IRRIGATION DETAILS 2
I-5	IRRIGATION WATER CALCULATIONS
L1	LANDSCAPE PLAN (1)

ARCHITECTURAL

A0.0	COVERSHEET
A0.1	CALGREEN RESIDENTIAL MANDATORY MEASURES
A0.2A	2016 CALGREEN RESIDENTIAL CHECKLIST
A0.2B	2016 CALGREEN RESIDENTIAL CHECKLIST (CONT'D)
A0.3	INSTRUCTIONS FOR BIDDERS
A0.4	SITE SURVEY
A0.5	SPECIFICATIONS
A0.6	SPECIFICATIONS SUPPLEMENTAL
A0.7	FLOOR AREA CALCULATION
A1.0	SITE PLAN
A1.2	LAND DISTURBANCE SITE PLAN
A2.0	GROUND FLOOR PLAN
A2.1	MAIN FLOOR PLAN
A2.2	ROOF PLAN
A3.1	NORTH & WEST ELEVATIONS (PROPOSED)
A3.2	SOUTH & EAST ELEVATIONS (PROPOSED)
A4.1	BUILDING SECTIONS
A5.1	RCP/LIGHTING PLAN GROUND FLOOR
A5.2	RCP/LIGHTING PLAN MAIN FLOOR
A5.3	LIGHTING SPECIFICATIONS (Interior)
A5.4	LIGHTING SPECIFICATIONS (Interior)
A6.1	DOOR SCHEDULE
A6.2	DOOR SCHEDULE (CONT'D)
A6.3	WINDOW SCHEDULE
A7.1	INTERIOR ELEVATIONS
A7.2	INTERIOR ELEVATIONS
A7.3	INTERIOR SPECIFICATIONS
A8.1	DETAILS
A8.2	DOOR DETAILS
A8.3	WINDOW DETAILS
A8.4	ROOF DETAILS
A9.1	STAIR SECTIONS/ DETAILS
T-1	TITLE 24 REPORT
T-2	TITLE 24 REPORT

STRUCTURAL DRAWINGS

S1.1	GENERAL NOTES
S1.2	GENERAL NOTES
S2.1	FOUNDATION PLAN
S2.2	2ND FLOOR FRAMING PLAN
S2.3	ROOF FRAMING PLAN
S4.1	FOUNDATION DETAILS
S5.1	FRAMING DETAILS
S5.2	FRAMING DETAILS
S5.3	FRAMING DETAILS
S5.4	FRAMING DETAILS
S5.5	FRAMING DETAILS

FOR COUNTY APPROVAL STAMP

MODERN HOUSE
ARCHITECTURE & DESIGN
1265 Indiana Street
San Francisco Ca. 94107
P. 415.800.8520
C. 415.596.7281
modernhouse@mac.com
www.modernhousearchitects.com

LICENSED ARCHITECT CURTIS C CLINE C26383 6.30.21 RENEWAL DATE STATE OF CALIFORNIA

Curt Cline Architect

BUILDING PERMIT REVIEW

029-35-005

PANGAN RESIDENCE

AUGUSTA CT
MILPITAS, CA

REVISIONS:

1	BUILDING COMMENTS 11/29/2018
2	BUILDING COMMENTS 9/16/2020

COVERSHEET

SCALE : AS NOTED

07.26.2018

SHEET : **A0.0**

THESE DRAWINGS ARE THE ORIGINAL UNPUBLISHED WORK OF THE ARCHITECT AND MAY NOT BE USED OR DISCLOSED WITHOUT THE WRITTEN PERMISSION OF THE ARCHITECT
©MODERN HOUSE

3 Stabilized Construction Entrance/Exit

CASQA Detail TC-1

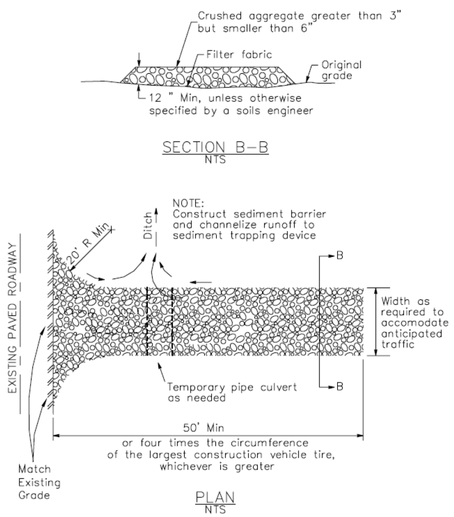

4 Velocity Dissipation Devices

CASQA Detail EC-10

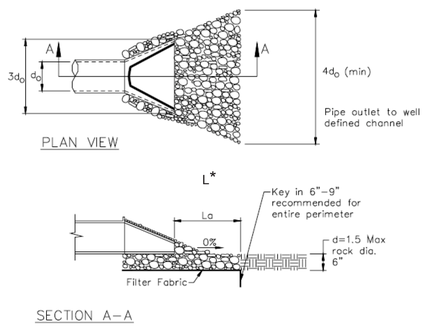

* Length per ABAG Design Standards

1 Silt Fence

CASQA Detail SE-1

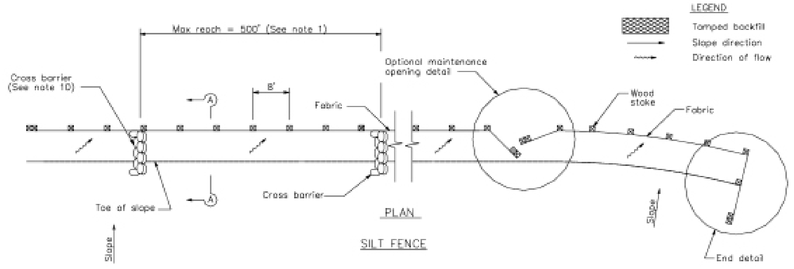

NOTES

1. Construct the length of each reach so that the change in base elevation along the reach does not exceed 1/3 the height of the linear barrier, in no case shall the reach length exceed 500'.
2. The last 8'–0" of fence shall be turned up slope.
3. Stake dimensions are nominal.
4. Dimension may vary to fit field condition.
5. Stakes shall be spaced at 8'–0" maximum and shall be positioned on downstream side of fence.
6. Stakes to overlap and fence fabric to fold around each stake one full turn. Secure fabric to stake with 4 staples.
7. Stakes shall be driven tightly together to prevent potential flow–through of sediment at joint. The taps of the stakes shall be secured with wire.
8. For end stake, fence fabric shall be folded around two stakes one full turn and secured with 4 staples.
9. Minimum 4 staples per stake. Dimensions shown are typical.
10. Cross barriers shall be a minimum of 1/3 and a maximum of 1/2 the height of the linear barrier.
11. Maintenance openings shall be constructed in a manner to ensure sediment remains behind silt fence.
12. Joining sections shall not be placed at sump locations.
13. Sandbag rows and layers shall be offset to eliminate gaps.

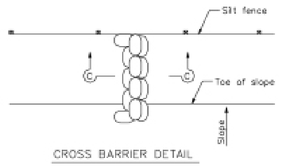

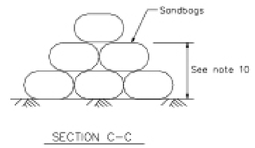

2 Silt Fence

CASQA Detail SE-1

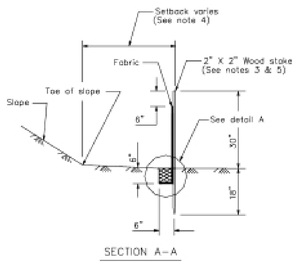

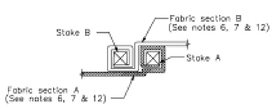



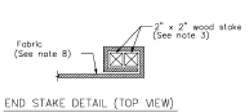

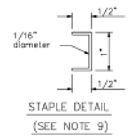

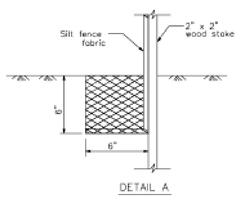

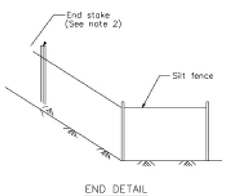

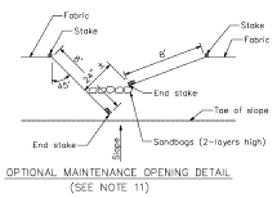

Source for Graphics: California Stormwater BMP Handbook, California Stormwater Quality Association, January 2003.
Available from www.cabmphandbooks.com.

STANDARD BEST MANAGEMENT PRACTICE NOTES

1. Solid and Demolition Waste Management: Provide designated waste collection areas and containers on site away from streets, gutters, storm drains, and waterways, and arrange for regular disposal. Waste containers must be watertight and covered at all times except when waste is deposited. Refer to Erosion & Sediment Control Field Manual, 4th Edition (page C3) or latest.
2. Hazardous Waste Management: Provide proper handling and disposal of hazardous wastes by a licensed hazardous waste material hauler. Hazardous wastes shall be stored and properly labeled in sealed containers constructed of suitable materials. Refer to Erosion & Sediment Control Field Manual, 4th Edition (pages C-5 to C-6) or latest.
3. Spill Prevention and Control: Provide proper storage areas for liquid and solid materials, including chemicals and hazardous substances, away from streets, gutters, storm drains, and waterways. Spill control materials must be kept on site where readily accessible. Spills must be cleaned up immediately and contaminated soil disposed properly. Refer to Erosion & Sediment Control Field Manual, 4th Edition (pages C-7 to C-8, C-13 to C-14) or latest.
4. Vehicle and Construction Equipment Service and Storage: An area shall be designated for the maintenance, where on-site maintenance is required, and storage of equipment that is protected from stormwater run-on and runoff. Measures shall be provided to capture any waste oils, lubricants, or other potential pollutants and these wastes shall be properly disposed of off site. Fueling and major maintenance/repair, and washing shall be conducted off-site whenever feasible. Refer to Erosion & Sediment Control Field Manual, 4th Edition (page C9) or latest.
5. Material Delivery, Handling and Storage: In general, materials should not be stockpiled on site. Where temporary stockpiles are necessary and approved by the County, they shall be covered with secured plastic sheeting or tarp and located in designated areas near construction entrances and away from drainage paths and waterways. Barriers shall be provided around storage areas where materials are potentially in contact with runoff. Refer to Erosion & Sediment Control Field Manual, 4th Edition (pages C-11 to C-12) or latest.
6. Handling and Disposal of Concrete and Cement: When concrete trucks and equipment are washed on-site, concrete wastewater shall be contained in designated containers or in a temporary lined and watertight pit where wasted concrete can harden for later removal. If possible have concrete contractor remove concrete wash water from site. In no case shall fresh concrete be washed into the road right-of-way. Refer to Erosion & Sediment Control Field Manual, 4th Edition (pages C-15 to C-16) or latest.
7. Pavement Construction Management: Prevent or reduce the discharge of pollutants from paving operations, using measures to prevent run-on and runoff pollution and properly disposing of wastes. Avoid paving in the wet season and reschedule paving when rain is in the forecast. Residue from saw-cutting shall be vacuumed for proper disposal. Refer to Erosion & Sediment Control Field Manual, 4th Edition (pages C-17 to C-18) or latest.
8. Contaminated Soil and Water Management: Inspections to identify contaminated soils should occur prior to construction and at regular intervals during construction. Remediating contaminated soil should occur promptly after identification and be specific to the contaminant identified, which may include hazardous waste removal. Refer to Erosion & Sediment Control Field Manual, 4th Edition (pages C-19 to C-20) or latest.
9. Sanitary/Septic Water Management: Temporary sanitary facilities should be located away from drainage paths, waterways, and traffic areas. Only licensed sanitary and septic waste haulers should be used. Secondary containment should be provided for all sanitary facilities. Refer to Erosion & Sediment Control Field Manual, 4th Edition (page C-21) or latest.
10. Inspection & Maintenance: Areas of material and equipment storage sites and temporary sanitary facilities must be inspected weekly. Problem areas shall be identified and appropriate additional and/or alternative control measures implemented immediately, within 24 hours of the problem being identified.

STANDARD EROSION CONTROL NOTES

1. Sediment Control Management:

   Tracking Prevention & Clean Up: Activities shall be organized and measures taken as needed to prevent or minimize tracking of soil onto the public street system. A gravel or proprietary device construction entrance/exit is required for all sites. Clean up of tracked material shall be provided by means of a street sweeper prior to an approaching rain event, or at least once at the end of each workday that material is tracked, or, more frequently as determined by the County Inspector. Refer to Erosion & Sediment Control Field Manual, 4th Edition (pages B-31 to B-33) or latest.

   Storm Drain Inlet and Catch Basin Inlet Protection: All inlets within the vicinity of the project and within the project limits shall be protected with gravel bags placed around inlets or other inlet protection. At locations where exposed soils are present, staked fiber roles or staked silt fences can be used. Inlet filters are not allowed due to clogging and subsequent flooding. Refer to Erosion & Sediment Control Field Manual, 4th Edition (pages B-49 to B-51) or latest.

   Storm Water Runoff: No storm water runoff shall be allowed to drain in to the existing and/or proposed underground storm drain system or other above ground watercourses until appropriate erosion control measures are fully installed.

   Dust Control: The contractor shall provide dust control in graded areas as required by providing wet suppression or chemical stabilization of exposed soils, providing for rapid clean up of sediments deposited on paved roads, furnishing construction road entrances and vehicle wash down areas, and limiting the amount of areas disturbed by clearing and earth moving operations by scheduling these activities in phases.

   Stockpiling: Excavated soils shall not be placed in streets or on paved areas. Borrow and temporary stockpiles shall be protected with appropriate erosion control measures(tarps, straw bales, silt fences, ect.) to ensure silt does not leave the site or enter the storm drain system or neighboring watercourse.
2. Erosion Control: During the rainy season, all disturbed areas must include an effective combination of erosion and sediment control. It is required that temporary erosion control measures are applied to all disturbed soil areas prior to a rain event. During the non-rainy season, erosion control measures must be applied sufficient to control wind erosion at the site.
3. Inspection & Maintenance: Disturbed areas of the Project's site, locations where vehicles enter or exit the site, and all erosion and sediment controls that are identified as part of the Erosion Control Plans must be inspected by the Contractor before, during, and after storm events, and at least weekly during seasonal wet periods. Problem areas shall be identified and appropriate additional and/ or alternative control measures implemented immediately, within 24 hours of the problem being identified.
4. Project Completion: Prior to project completion and signoff by the County Inspector, all disturbed areas shall be reseeded, planted, or landscaped to minimize the potential for erosion on the subject site.
5. It shall be the Owner's/Contractor's responsibility to maintain control of the entire construction operation and to keep the entire site in compliance with the erosion control plan.
6. Erosion and sediment control best management practices shall be operable year round or until vegetation is fully established on landscaped surfaces.

Project Information

029-35-005

PANGAN RESIDENCE

AUGUSTA CT
MILPITAS, CA

Best Management Practices and Erosion Control Details Sheet 1
County of Santa Clara

BMP-1

7 Geotextiles and Mats

CASQA Detail EC-7

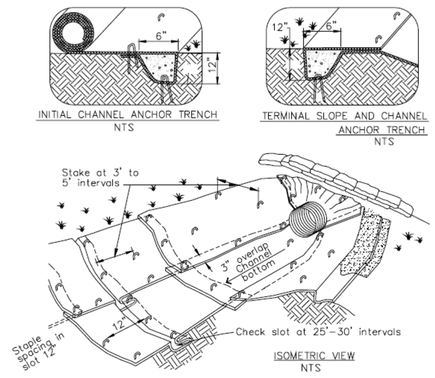

NOTES:
1. Check slots to be constructed per manufacturers specifications.
2. Staking or stapling layout per manufacturers specifications.
3. Install per manufacturer's recommendations

TYPICAL INSTALLATION DETAIL

5 Geotextiles and Mats

CASQA Detail EC-7

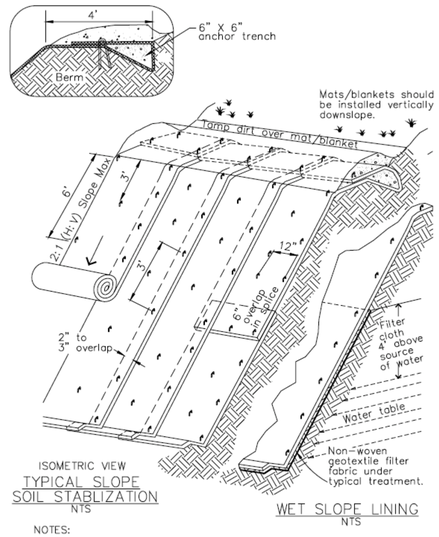

NOTES:
1. Slope surface shall be free of rocks, clods, sticks and grass. Mats/blankets shall have good soil contact.
2. Lay blankets loosely and stake or staple to maintain direct contact with the soil. Do not stretch.
3. Install per manufacturer's recommendations

TYPICAL INSTALLATION DETAIL

3 Entrance/Outlet Tire Wash

CASQA Detail TC-3

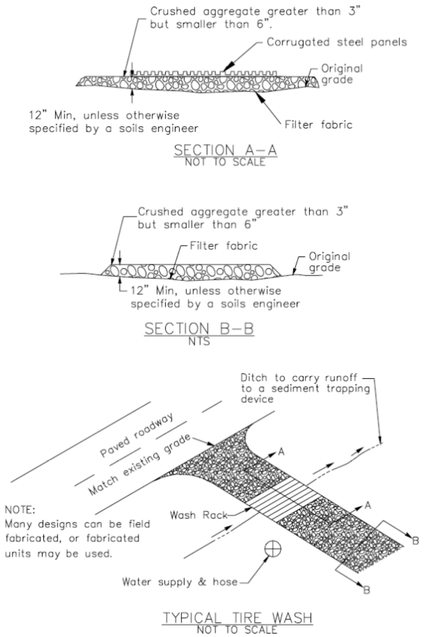

1 Fiber Rolls

CASQA Detail SE-5

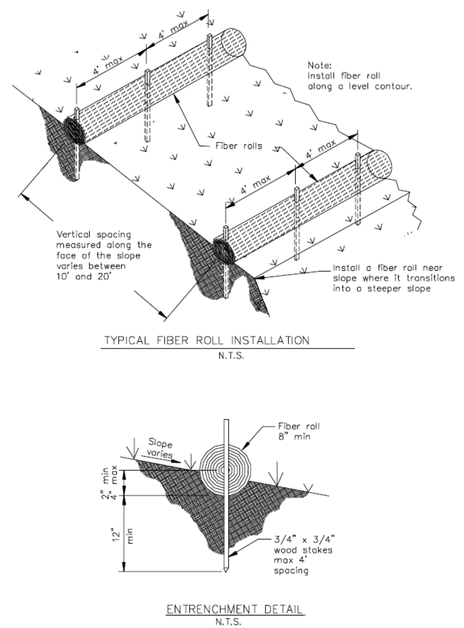

8 Storm Drain Inlet Protection

CASQA Detail SE-10

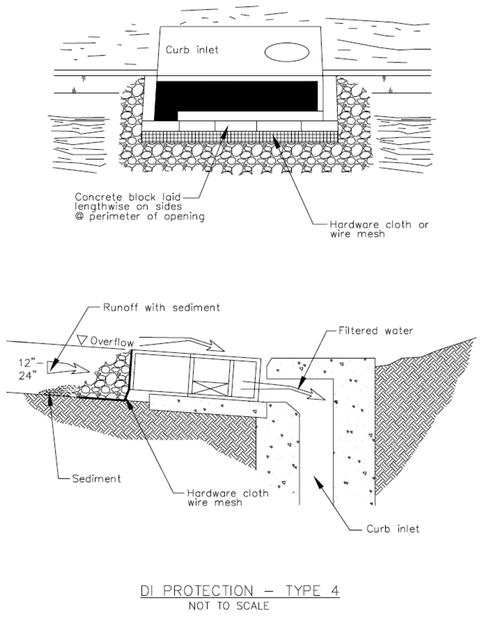

6 Storm Drain Inlet Protection

CASQA Detail SE-10

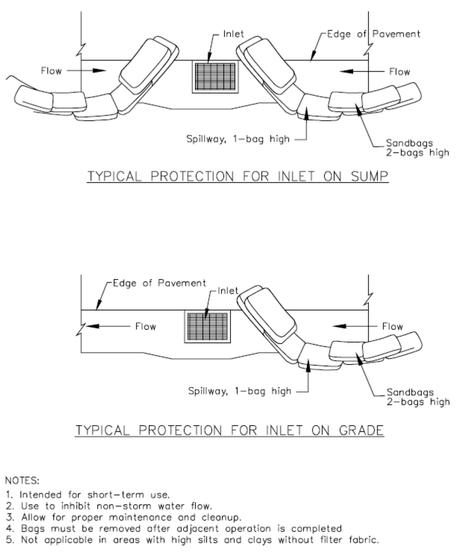

NOTES:
1. Intended for short-term use.
2. Use to inhibit non-storm water flow.
3. Allow for proper maintenance and cleanup.
4. Bags must be removed after adjacent operation is completed
5. Not applicable in areas with high silts and clays without filter fabric.

DI PROTECTION TYPE 3
NOT TO SCALE

4 Storm Drain Inlet Protection

CASQA Detail SE-10

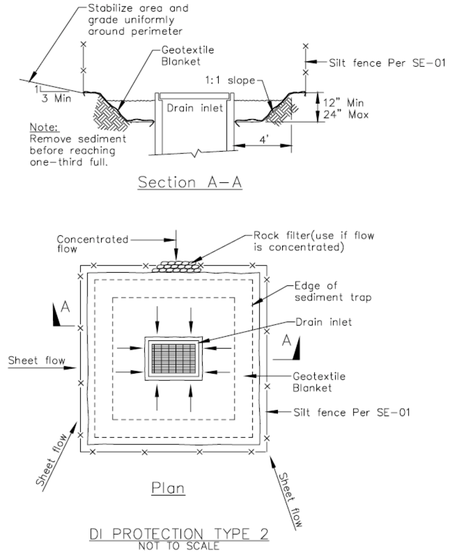

Notes
1. For use in cleared and grubbed and in graded areas.
2. Shape basin so that longest inflow area faces longest length of trap.
3. For concentrated flows, shape basin in 2:1 ratio with length oriented towards direction of flow.

2 Concrete Waste Management

CASQA Detail WM-8

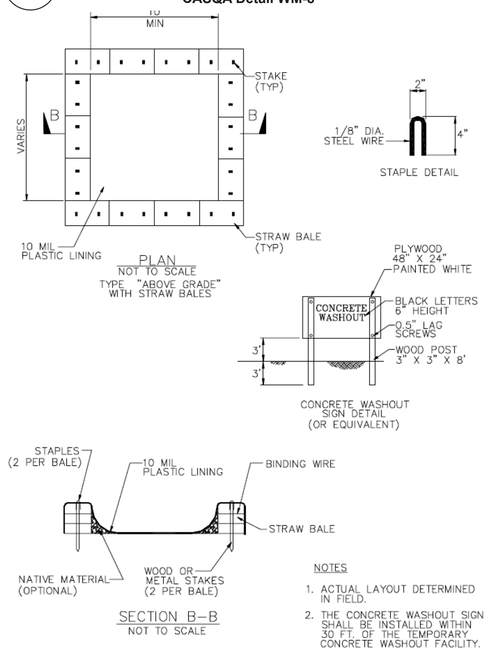

NOTES
1. ACTUAL LAYOUT DETERMINED IN FIELD.
2. THE CONCRETE WASHOUT SIGN SHALL BE INSTALLED WITHIN 30 FT. OF THE TEMPORARY CONCRETE WASHOUT FACILITY.

Source for Graphics: California Stormwater BMP Handbook, California Stormwater Quality Association, January 2003.
Available from www.cabmphandbooks.com.

Project Information

029-35-005
PANGAN RESIDENCE
AUGUSTA CT
MILPITAS, CA

Best Management Practices and Erosion Control Details Sheet 2
County of Santa Clara

BMP-2

COUNTY OF SANTA CLARA
General Construction Specifications

GENERAL CONDITIONS

1. ALL CONSTRUCTION WORK SHALL BE PERFORMED IN ACCORDANCE WITH THE SOILS AND/OR GEOTECHNICAL REPORT PREPARED BY EARTHSYSTEMS PACIFIC AND DATED APRIL 4, 2014. THIS REPORT IS SUPPLEMENTED BY: 1) THESE PLANS AND SPECIFICATIONS, 2) THE COUNTY OF SANTA CLARA STANDARD DETAILS. 3) THE COUNTY OF SANTA CLARA STANDARD SPECS, 4) STATE OF CALIFORNIA STANDARD DETAILS, 5) STATE OF CALIFORNIA STANDARD SPECIFICATIONS. IN THE EVENT OF CONFLICT THE FORMER SHALL TAKE PRECEDENCE OVER THE LATTER. THE PERFORMANCE AND COMPLETION OF ALL WORK MUST BE TO THE SATISFACTION OF THE COUNTY.
2. DEVELOPER IS RESPONSIBLE FOR INSTALLATION OF THE IMPROVEMENTS SHOWN ON THESE PLANS AND HE OR HIS SUCCESSOR PROPERTY OWNERS ARE RESPONSIBLE FOR THEIR CONTINUED MAINTENANCE.
3. DEVELOPER SHALL BE RESPONSIBLE FOR CORRECTION OF ANY ERRORS OR OMISSIONS IN THESE PLANS. THE COUNTY SHALL BE AUTHORIZED TO REQUIRE DISCONTINUANCE OF ANY WORK AND SUCH CORRECTION AND MODIFICATION OF PLANS AS MAY BE NECESSARY TO COMPLY WITH COUNTY STANDARDS OR CONDITIONS OF DEVELOPMENT APPROVAL.
4. DEVELOPER SHALL OBTAIN ENCROACHMENT PERMITS FROM THE SANTA CLARA VALLEY WATER DISTRICT AND CALIFORNIA DEPARTMENT OF TRANSPORTATION WHERE NEEDED. COPIES OF THESE PERMITS SHALL BE KEPT AT THE JOB SITE FOR REVIEW BY THE COUNTY'S INSPECTOR.
5. DEVELOPER SHALL REMOVE OR TRIM ALL TREES TO PROVIDE AN UNOBSTRUCTED FIFTEEN (15) FOOT VERTICAL CLEARANCE FOR ROADWAY AREA.
6. THIS PLAN AUTHORIZES THE REMOVAL OF ONLY THOSE TREES WITH TRUNK DIAMETERS GREATER THAN 12 INCHES MEASURED 4.5 FEET ABOVE THE GROUND THAT ARE SHOWN TO BE REMOVED UNLESS AN AMENDED PLAN IS APPROVED OR A SEPARATE TREE REMOVAL PERMIT IS OBTAINED FROM THE PLANNING OFFICE. IT IS THE CONTRACTOR'S RESPONSIBILITY TO ENSURE THAT REMOVAL OF ADDITIONAL TREES HAS BEEN PERMITTED.
7. DEVELOPER SHALL PROVIDE ADEQUATE DUST CONTROL AS REQUIRED BY THE COUNTY INSPECTOR.
8. ALL PERSONS MUST COMPLY WITH SECTION 4442 OF THE PUBLIC RESOURCES CODE AND SECTION 13005 OF THE HEALTH AND SAFETY CODE RELATING TO THE USE OF SPARK ARRESTERS.
9. UPON DISCOVERING OR UNEARTHING ANY BURIAL SITE AS EVIDENCED BY HUMAN SKELETAL REMAINS OR ARTIFACTS, THE PERSON MAKING SUCH DISCOVERY SHALL IMMEDIATELY NOTIFY THE COUNTY CORONER AT (4008) 454–2520 AND LAND DEVELOPMENT ENGINEERING OFFICE AT (408) 299–5730. NO FURTHER DISTURBANCE OF THE SITE MAY BE MADE EXCEPT AS AUTHORIZED BY THE LAND DEVELOPMENT OFFICE IN ACCORD WITH PROVISIONS OF THIS ORDINANCE (COUNTY ORDINANCE CODE SECTION B6–18).
10. THESE PLANS ARE FOR THE WORK DESCRIBED IN THE SCOPE OF WORK ONLY. A SEPARATE PERMIT WILL BE REQUIRED FOR THE SEPTIC LINE CONSTRUCTION.
11. ANY DEVIATION FROM THESE APPROVED PLANS SHALL BE RE–APPROVED IN WRITING BY THE COUNTY ENGINEER PRIOR TO CONSTRUCTION.

CONSTRUCTION STAKING

1. THE DEVELOPER'S ENGINEER IS RESPONSIBLE FOR THE INITIAL PLACEMENT AND REPLACEMENT OF CONSTRUCTION GRADE STAKES. THE STAKES ARE TO BE ADEQUATELY IDENTIFIED, LOCATED, STABILIZED, ETC. FOR THE CONVENIENCE OF CONTRACTORS. LATERAL OFFSET OF STAKES SET FOR CURBS AND GUTTERS SHALL NOT EXCEED 2 1/2 FEET FROM BACK OF CURB.
2. ANY PROPERTY LINE STAKES OR ROAD MONUMENTS DISTURBED DURING CONSTRUCTION SHALL BE REPLACED BY DEVELOPER'S ENGINEER AND LICENSED LAND SURVEYOR.
3. PROPERTY LINE STAKING MUST BE PERFORMED BY THE PROJECT ENGINEER OR LAND SURVEYOR TO ESTABLISH OR RE–ESTABLISH THE PROJECT BOUNDARY AND SHALL BE INSPECTED BY THE COUNTY INSPECTOR PRIOR TO THE BEGINNING OF THE WORK.
4. PROPER CONSTRUCTION STAKES SHALL BE SET IN THE FIELD BY THE PROJECT ENGINEER OR LAND SURVEYOR AND VERIFIED BY THE COUNTY INSPECTOR PRIOR TO THE COMMENCEMENT OF GRADING.

CONSTRUCTION INSPECTION

1. CONTRACTOR SHALL NOTIFY PERMIT INSPECTION UNIT, SANTA CLARA COUNTY PRIOR TO COMMENCING WORK AND FOR FINAL INSPECTION OF WORK AND SITE.
2. THE COUNTY REQUIRES A MINIMUM OF 24 HOURS ADVANCE NOTICE FOR GENERAL INSPECTION, 48 HOURS FOR ASPHALT CONCRETE INSPECTION.
3. INSPECTION BY SANTA CLARA COUNTY SHALL BE LIMITED TO INSPECTION OF MATERIALS AND PROCESSES OF CONSTRUCTION TO OBSERVE THEIR COMPLIANCE WITH PLANS & SPECIFICATIONS BUT DOES NOT INCLUDE RESPONSIBILITY FOR THE SUPERINTENDENT OF CONSTRUCTION, SITE CONDITIONS, EQUIPMENT OR PERSONNEL. CONTRACTOR SHALL NOTIFY THE COUNTY LAND DEVELOPMENT INSPECTOR AT PHONE (408) 299–6868 AT LEAST 24 HOURS PRIOR TO COMMENCING WORK AND FOR FINAL INSPECTION OF WORK AND SITE.
4. DEVELOPER AND/OR HIS AUTHORIZED REPRESENTATIVE MUST SUBMIT WRITTEN REQUEST FOR FINAL INSPECTION AND ACCEPTANCE. SAID REQUEST SHALL BE DIRECTED TO THE INSPECTION OFFICE NOTED ON THE PERMIT FORM.
5. THE CONTRACTOR SHALL PROVIDE CONSTRUCTION INSPECTOR WITH PAD ELEVATION AND LOCATION CERTIFICATES, PREPARED BY THE PROJECT ENGINEER OR LAND SURVEYOR, PRIOR TO COMMENCEMENT OF THE BUILDING FOUNDATION.

SITE PREPARATION (CLEARING AND GRUBBING)

1. EXISTING TREES AUTHORIZED FOR REMOVAL, ROOTS, AND FOREIGN MATERIAL IN AREAS TO BE IMPROVED WILL BE REMOVED TO AN AUTHORIZED DISPOSAL SITE AS FOLLOWS:
   A) TO A MINIMUM DEPTH OF TWO FEET BELOW THE FINISHED GRADE OF PROPOSED ROADWAYS (EITHER PRIVATE OR TO BE DEDICATED TO PUBLIC USE)
   B) FROM AREAS AFFECTED BY THE PROPOSED GRADING EXCEPT WHERE NOTED ON THE PLANS.
2. IT SHALL BE THE RESPONSIBILITY OF THE DEVELOPER TO MOVE OR RELOCATE UTILITY POLES AND OTHER OBSTRUCTIONS IN THE WAY OF CONSTRUCTION.

UTILITY LOCATION, TRENCHING & BACKFILL

1. CONTRACTOR SHALL NOTIFY USA (UNDERGROUND SERVICE ALERT) AT 1–800–277–2600 A MINIMUM OF 24 HOURS BEFORE BEGINNING UNDERGROUND WORK FOR VERIFICATION OF THE LOCATION OF UNDERGROUND UTILITIES.
2. ACCURATE VERIFICATION AS TO SIZE, LOCATION, AND DEPTH OF EXISTING UNDERGROUND CONDUITS OR FACILITIES SHALL BE THE INDIVIDUAL CONTRACTORS RESPONSIBILITY. PLAN LOCATIONS ARE APPROXIMATE AND FOR GENERAL INFORMATION ONLY.
3. ALL UNDERGROUND INSTALLATIONS SHALL BE IN PLACE AND THE TRENCH BACKFILLED AND COMPACTED BEFORE PLACING AGGREGATE BASE MATERIAL OR SURFACE STRUCTURES. SURFACING MAY BE DONE IF THE UTILITY COMPANY CONCERNED INDICATES BY LETTER THAT IT WILL BORE. UNLESS SPECIFICALLY AUTHORIZED BY THE COUNTY, GAS AND WATER MAINS SHALL BE INSTALLED OUTSIDE THE PAVED AREAS.
4. TRENCH BACKFILL IN EXISTING PAVEMENT AREAS SHALL BE SAND MATERIAL IN ACCORDANCE WITH THE APPLICABLE PROVISIONS OF THE STATE SPECIFICATIONS. THE STRUCTURAL SECTION FOR TRENCH REPLACEMENT SHALL CONSIST OF NOT LESS THAN 12 INCHES OF APPROVED AGGREGATE BASE MATERIAL COMPACTED TO A RELATIVE COMPACTION OF AT LEAST 95% AND 4 INCHES OF HOT ASPHALT CONCRETE PLACED IN TWO LIFTS. TRENCH RESTORATION FOR HIGHER TYPE PAVEMENTS SHALL BE MADE IN KIND OR AS DIRECTED BY THE COUNTY.
5. TRENCH BACKFILL IN NEW CONSTRUCTION AREAS SHALL BE SAND MATERIAL COMPACTED TO A RELATIVE COMPACTION OF AT LEAST 90% THE REQUIREMENT FOR SELECT MATERIAL MAY BE WAIVED BY COUNTY IF THE NATIVE SOIL IS SUITABLE FOR USE AS TRENCH BACKFILL BUT THE COMPACTION REQUIREMENTS WILL NOT BE THEREBY WAIVED.
6. BACKFILL AND TRENCH RESTORATION REQUIREMENTS SHALL APPLY AS MINIMUM STANDARDS TO ALL UNDERGROUND FACILITIES INSTALLED BY OTHER FIRMS OR PUBLIC AGENCIES.

RETAINING WALLS

1. REINFORCED CONCRETE AND CONCRETE MASONRY UNIT RETAINING WALLS SHALL HAVE FOUNDATION AND REINFORCEMENT INSPECTED BY THE COUNTY ENGINEERING INSPECTOR AND ENGINEER OF RECORD PRIOR TO POURING THE FOUNDATION AND FORMING THE WALL.
2. SEGMENTAL BLOCK RETAINING WALLS SHALL HAVE FOUNDATION AND REINFORCEMENT INSPECTED BY THE COUNTY ENGINEERING INSPECTOR.

GRADING

1. EXCAVATED MATERIAL SHALL BE PLACED IN THE FILL AREAS DESIGNATED OR SHALL BE HAULED AWAY FROM THE SITE TO A COUNTY APPROVED DISPOSAL SITE. WHERE FILL MATERIAL IS TO BE PLACED ON NATURAL GROUND, IS SHALL BE STRIPPED OF ALL VEGETATION. TO ACHIEVE A PROPER BOND WITH THE FILL MATERIAL, THE SURFACE OF THE GROUND SHALL BE SCARIFIED TO DEPTH OF 6" BEFORE FILL IS PLACED. WHERE NATURAL GROUND IS STEEPER THAN 5:1, IT SHALL BE BENCHED AND THE FILL KEYED IN TO ACHIEVE STABILITY. WHERE NEW FILL IS TO BE PLACED ON EXISTING FILL THE EXISTING FILL SHALL BE REMOVED UNTIL MATERIAL COMPACTED TO 90% RELATIVE COMPACTION IS EXPOSED. THEN THE NEW FILL MATERIAL SHALL BE PLACED AS PER THESE CONSTRUCTION NOTES. FILL MATERIAL SHALL BE PLACED IN UNIFORM LIFTS NOT EXCEEDING 6" IN UNCOMPACTED THICKNESS. BEFORE COMPACTION BEGINS, THE FILL SHALL BE BROUGHT TO A WATER CONTENT THAT WILL PERMIT PROPER COMPACTION BY EITHER 1) AERATING THE FILL IF IT IS TOO WET OR 2) MOISTENING THE FILL WITH WATER IF IT IS TOO DRY. EACH LIFT SHALL BE THOROUGHLY MIXED BEFORE COMPACTION TO ENSURE A UNIFORM DISTRIBUTION OF MOISTURE.
2. EXCESS CUT MATERIAL SHALL NOT BE SPREAD OR STOCKPILED ON THE SITE.
3. SURPLUS EARTH FILL MATERIAL SHALL BE PLACED IN A SINGLE (8" MAX) THICK LAYER COMPACTED TO WITHSTAND WEATHERING IN THE AREA(S) DELINEATED ON THE PLAN.
4. NO ORGANIC MATERIAL SHALL BE PLACED IN ANY FILL. NO TREES SHALL BE REMOVED OUTSIDE OF CUT, FILL OR ROADWAY AREAS.
5. THE UPPER 6" OF SUBGRADE BELOW DRIVEWAY ACCESS ROAD OR PARKING AREA SHALL BE COMPACTED TO 95% OF MAXIMUM DENSITY.
6. MAXIMUM CUT SLOPE SHALL BE 2 HORIZONTAL TO 1 VERTICAL. MAXIMUM FILL SLOPE SHALL BE 2 HORIZONTAL TO 1 VERTICAL.

LOCATION	CUT (C.Y.)	FILL (C.Y.)	VERT. DEPTH
RESIDENCE BUILDING SITE	982	0	11
TURNAROUND	222	35	6
DRIVEWAY	3858	3026	7
OFF SITE IMPROVEMENTS	0	0	0
TOTAL	5062	3061	

NOTE: FILL VOLUMES INCLUDE 10% SHRINKAGE.
EXCESS MATERIAL SHALL BE OFF HAULED TO A COUNTY APPROVED DUMP SITE.

7. NOTIFY SOILS ENGINEER TWO (2) DAYS PRIOR TO COMMENCEMENT OF ANY GRADING WORK TO COORDINATE THE WORK IN THE FIELD.
8. ALL MATERIALS FOR FILL SHOULD BE APPROVED BY THE SOILS ENGINEER BEFORE IT IS BROUGHT TO THE SITE.
9. THE UPPER 6" OF THE SUBGRADE SOIL SHALL BE SCARIFIED, MOISTURE CONDITIONED AND COMPACTED TO A MINIMUM RELATIVE COMPACTION OF 95%
10. ALL AGGREGATE BASE MATERIAL SHALL BE COMPACTED TO A MINIMUM 95% RELATIVE COMPACTION.
11. THE GEOTECHNICAL PLAN REVIEW LETTER MUST BE REVIEWED AND APPROVED BY THE COUNTY GEOLOGIST PRIOR TO FINAL APPROVAL BY THE COUNTY ENGINEER FOR BUILDING OCCUPANCY.
12. THE PROJECT GEOTECHNICAL ENGINEER SHALL PERFORM COMPACTION TESTING AND PRESENT THE RESULTS TO THE COUNTY ENGINEERING INSPECTOR PRIOR TO THE CONSTRUCTION OF ANY PAVED AREA.
13. GRADING WORK BETWEEN OCTOBER 15TH AND APRIL 15TH IS AT THE DISCRETION OF THE SANTA CLARA COUNTY GRADING OFFICIAL.
14. TOTAL DISTURBED AREA FOR THE PROJECT 25320 SF.
15. WDID NO._____N/A_____.
16. THE INSPECTOR MAY VERIFY THAT A VALID NOTICE OF INTENT (NOI) HAS BEEN ISSUED BY THE STATE AND THAT A CURRENT AND UP TO DATE STORM WATER POLLUTION PREVENTION PLAN (SWPPP) IS AVAILABLE ON SITE.

TREE PROTECTION

1. FOR ALL TREES TO BE RETAINED WITH A CANOPY IN THE DEVELOPMENT AREA OR INTERFACES WITH THE LIMITS OF GRADING FOR ALL PROPOSED DEVELOPMENT ON SITE, THE TREES SHALL BE PROTECTED BY THE PLACEMENT OF RIGID TREE PROTECTIVE FENCING, CONSISTENT WITH THE COUNTY INTEGRATED LANDSCAPE GUIDELINES, AND INCLUDE THE FOLLOWING:
   A. FENCING SHOULD BE PLACED ALONG THE OUTSIDE EDGE OF THE DRIPLINE OF THE TREE OR GROVE OF TREES.
   B. THE FENCING SHALL BE MAINTAINED THROUGHOUT THE SITE CONSTRUCTION PERIOD AND SHALL BE INSPECTED PERIODICALLY FOR DAMAGE AND PROPER FUNCTION.
   C. FENCING SHALL BE REPAIRED, AS NECESSARY, TO PROVIDE A PHYSICAL BARRIER FROM CONSTRUCTION ACTIVITIES.
   D. SIGNAGE STATING, "WARNING– THIS FENCING SHALL NOT BE REMOVED WITHOUT PERMISSION FROM THE SANTA CLARA COUNTY PLANNING OFFICE (408) 299–5770. COUNTY OF SANTA CLARA TREE PROTECTION MEASURES MAY BE FOUND AT http://www.sccplanning.gov." SHALL BE PLACED ON THE TREE PROTECTIVE FENCING UNTIL FINAL OCCUPANCY.
2. PRIOR TO COMMENCEMENT OF ANY CONSTRUCTION ACTIVITY, TREE PROTECTIVE FENCING SHALL BE SECURELY IN PLACED AND INSPECTED BY THE LAND DEVELOPMENT ENGINEERING INSPECTOR.
3. SEE EXISTING TREE PROTECTION DETAILS FOR MORE INFORMATION.

ACCESS ROADS AND DRIVEWAYS

1. DRIVEWAY LOCATIONS SHALL BE AS SHOWN ON THE IMPROVEMENT PLANS WITH CENTERLINE STATIONING. THE MINIMUM CONCRETE THICKNESS SHALL BE 6 INCHES THROUGHOUT (WITH A MAXIMUM APPROACH SLOPE OF 1 1/4 INCHES PER FOOT).
2. ALL DRIVEWAY OR COMMON ACCESS ROAD SECTIONS IN EXCESS OF 15 LONGITUDINAL SLOPE MUST BE PAVED WITH A MINIMUM 2–INCH ASPHALT LIFT OR FULL DEPTH CONCRETE LIFT PRIOR TO ANY COMBUSTIBLE FRAMING.
3. THE OWNER AND PRIME CONTRACTOR ARE RESPONSIBLE FOR MAINTAINING PROJECT SITE ACCESS AND NEIGHBORHOOD ACCESS FOR EMERGENCY VEHICLES AND LOCAL RESIDENTS.
4. ROADWAYS DESIGNATED AS NOT COUNTY MAINTAINED ROADS AS SHOWN ON THE PLAN WILL NOT BE ELIGIBLE FOR COUNTY MAINTENANCE UNTIL THE ROADWAYS ARE IMPROVED (AT NO COST TO THE COUNTY) TO THE PUBLIC MAINTENANCE ROAD STANDARDS APPROVED BY THE BOARD OF SUPERVISORS AND IN EFFECT AT SUCH TIME THAT THE ROADWAYS ARE CONSIDERED FOR ACCEPTANCE INTO THE COUNTY'S ROAD SYSTEM.
5. ALL WORK IN THE COUNTY ROAD RIGHT–OF–WAY REQUIRES AN ENCROACHMENT PERMIT FROM THE ROADS AND AIRPORTS DEPARTMENT. EACH INDIVIDUAL ACTIVITY REQUIRES A SEPARATE PERMIT – I.E. CABLE, ELECTRICAL, GAS, SEWER, WATER, RETAINING WALLS, DRIVEWAY APPROACHES, FENCES, LANDSCAPING, TREE REMOVAL, STORM DRAINAGE IMPROVEMENTS, ETC..

STREET LIGHTING

1. PACIFIC GAS & ELECTRIC ELECTROLIER SERVICE FEE SHALL BE PAID BY THE DEVELOPER AND/OR HIS AUTHORIZED REPRESENTATIVE.

SANITARY SEWER

1. THE SANITARY SEWER AND WATER UTILITIES SHOWN ON THESE PLANS ARE NOT PART OF THIS GRADING PERMIT AND ARE SHOWN FOR REFERENCE ONLY.
2. ALL MATERIALS AND METHODS OF CONSTRUCTION OF SANITARY SEWERS SHALL CONFORM TO THE SPECIFICATIONS OF THE JURISDICTION INVOLVED. INSPECTION OF SANITARY SEWER WORK SHALL BE DONE BY SAID JURISDICTION.

PORTLAND CEMENT CONCRETE

1. CONCRETE USED FOR STRUCTURAL PURPOSES SHALL BE CLASS "A" (6 SACK PER CUBIC YARD) AS SPECIFIED IN THE STATE STANDARD SPECIFICATIONS. CONCRETE PLACED MUST DEVELOP A MINIMUM STRENGTH FACTOR OF 2800 PSI IN A SEVEN–DAY PERIOD. THE CONCRETE MIX DESIGN SHALL BE UNDER THE CONTINUAL CONTROL OF THE COUNTY INSPECTOR.

AIR QUALITY, LANDSCAPING AND EROSION CONTROL

1. WATER ALL ACTIVE CONSTRUCTION AREAS AT LEAST TWCE DAILY.
2. COVER ALL TRUCKS HAULING SOIL, SAND, AND OTHER LOOSE MATERIALS OR REQUIRE ALL TRUCKS TO MAINTAIN AT LEAST TWO FEET OF FREEBOARD.
3. PAVE, APPLY WATER THREE TIMES DAILY, OR APPLY (NON–TOXIC) SOIL STABILIZERS ON ALL UNPAVED ACCESS ROADS, PARKING AREAS AND STAGING AREAS AT CONSTRUCTION SITES.
4. SWEEP DAILY (WITH WATER SWEEPERS) ALL PAVED ACCESS ROADS, PARKING AREAS AND STAGING AREAS AT CONSTRUCTION SITES. THE USE OF DRY POWDER SWEEPING IS PROHIBITED.
5. SWEEP STREETS DAILY (WITH WATER SWEEPERS) IF VISIBLE SOIL MATERIAL IS CARRIED ONTO ADJACENT PUBLIC STREETS. THE USE OF DRY POWDER SWEEPING IS PROHIBITED.
6. ALL CONSTRUCTION VEHICLES, EQUIPMENT AND DELIVERY TRUCKS SHALL HAVE A MAXIMUM IDLING TIME OF 5 MINUTES (AS REQUIRED BY THE CALIFORNIA AIRBORNE TOXIC CONTROL MEASURE TITLE 13, SECTION 2485 OF CALIFORNIA CODE OF REGULATIONS (CCR)). ENGINES SHALL BE SHUT OFF IF CONSTRUCTION REQUIRES LONGER IDLING TIME UNLESS NECESSARY FOR PROPER OPERATION OF THE VEHICLE.
7. ALL VEHICLE SPEEDS ON UNPAVED ROADS SHALL BE LIMITED TO 15 MILES PER HOUR.
8. ALL CONSTRUCTION EQUIPMENT SHALL BE MAINTAINED AND PROPERLY TUNED IN ACCORDANCE WITH MANUFACTURER'S SPECIFICATIONS. ALL EQUIPMENT SHALL BE CHECKED BY A CERTIFIED MECHANIC AND DETERMINED TO BE RUNNING IN PROPER CONDITION PRIOR TO OPERATION.
9. POST A SIGN THAT IS AT LEAST 32 SQUARE FEET MINIMUM 2 INCHES LETTER HEIGHT VISIBLE NEAR THE ENTRANCE OF CONSTRUCTION SITE THAT IDENTIFIES THE FOLLOWING REQUIREMENTS. OBTAIN ENCROACHMENT PERMIT FOR SIGN FROM ROADS DEPARTMENT OR OTHER APPLICABLE AGENCY IF REQUIRED.
   A. 15 MILES PER HOUR (MPH) SPEED LIMIT
   B. 5 MINUTES MAXIMUM IDLING TIME OF VEHICLES
   C. TELEPHONE NUMBER TO CONTACT THE BAY AREA AIR QUALITY MANAGEMENT DISTRICT REGARDING DUST COMPLAINTS. NOTE PHONE NUMBER OF THE BAY AREA AIR QUALITY MANAGEMENT DISTRICT AIR POLLUTION COMPLAIN HOTLINE OF 1–800–334–ODOR.
10. ALL FILL SLOPES SHALL BE COMPACTED AND LEFT IN A SMOOTH AND FIRM CONDITION CAPABLE OF WITHSTANDING WEATHERING.
11. ALL EXPOSED DISTURBED AREAS SHALL BE SEEDED WITH BROME SEED SPREAD AT THE RATE OF 5 LB. PER 1000 SQUARE FEET (OR APPROVED EQUAL). SEEDING AND WATERING SHALL BE MAINTAINED AS REQUIRED TO ENSURE GROWTH.
12. ALL DITCHES SHALL BE LINED PER COUNTY STANDARD SD8.
13. ALL STORM DRAINAGE STRUCTURES SHALL BE INSTALLED WITH EFFECTIVE ENTRANCE & OUTFALL EROSION CONTROLS E.G. SACKED CONCRETE RIP–RAP. ENERGY DISSIPATERS SHALL BE INSTALLED AT ALL DITCH OUTFALLS. WHERE OUTFALLS ARE NOT INTO AN EXISTING CREEK OR WATER COURSE, RUNOFF SHALL BE RELEASED TO SHEET FLOW.
14. PRIOR TO GRADING COMPLETION AND RELEASE OF THE BOND, ALL GRADED AREAS SHALL BE RESEEDED IN CONFORMANCE WITH THE COUNTY GRADING ORDINANCE TO MINIMIZE THE VISUAL IMPACTS OF THE GRADE SLOPES AND REDUCE THE POTENTIAL FOR EROSION OF THE SUBJECT SITE.
15. PERMANENT LANDSCAPING SHOWN ON THE ATTACHED LANDSCAPE PLAN MUST BE INSTALLED AND FIELD APPROVED BY THE COUNTY PLANNING OFFICE PRIOR TO FINAL APPROVAL BY THE COUNTY ENGINEER, AND FINAL OCCUPANCY RELEASE BY THE BUILDING INSPECTION OFFICE.
16. THE OWNER SHALL PREPARE AND PRESENT A WINTERIZATION REPORT TO THE COUNTY INSPECTOR FOR REVIEW PRIOR TO OCTOBER 15TH OF EVERY YEAR.
17. THE OWNER, CONTRACTOR, AND ANY PERSON PERFORMING CONSTRUCTION ACTIVITIES SHALL INSTALL AND MAINTAIN CONSTRUCTION BEST MANAGEMENT PRACTICES (BMPS) ON THE PROJECT SITE AND WITHIN THE SANTA CLARA COUNTY ROAD RIGHT–OF–WAY THROUGHOUT THE DURATION OF THE CONSTRUCTION AND UNTIL THE ESTABLISHMENT OF PERMANENT STABILIZATION AND SEDIMENT CONTROL TO PREVENT THE DISCHARGE OF POLLUTANTS INCLUDING SEDIMENT, CONSTRUCTION MATERIALS, EXCAVATED MATERIALS, AND WASTE INTO THE SANTA CLARA COUNTY RIGHT–OF–WAY, STORM SEWER WATERWAYS, ROADWAY INFRASTRUCTURE. BMPS SHALL INCLUDE, BUT NOT BE LIMITED TO THE FOLLOWING:
   A. PREVENTION OF POLLUTANTS IN STORM WATER DISCHARGES FROM THE CONSTRUCTION SITE AND THE CONTRACTOR'S MATERIAL AND EQUIPMENT LAYDOWN / STAGING AREAS.
   B. PREVENTION OF TRACKING OF MUD, DIRT, AND CONSTRUCTION MATERIALS ONTO THE PUBLIC ROAD RIGHT–OF–WAY.
   C. PREVENTION OF DISCHARGE OF WATER RUN–OFF DURING DRY AND WET WEATHER CONDITIONS ONTO THE PUBLIC ROAD RIGHT–OF–WAY.
18. THE OWNER, CONTRACTOR, AND ANY PERSON PERFORMING CONSTRUCTION ACTIVITIES SHALL ENSURE THAT ALL TEMPORARY CONSTRUCTION FACILITIES, INCLUDING BUT NOT LIMITED TO CONSTRUCTION MATERIALS, DELIVERIES, HAZARDOUS AND NON–HAZARDOUS MATERIAL STORAGE, EQUIPMENT, TOOLS, PORTABLE TOILETS, CONCRETE WASHOUT, GARBAGE CONTAINERS, LAYDOWN YARDS, SECONDARY CONTAINMENT AREAS, ETC. ARE LOCATED OUTSIDE THE SANTA CLARA COUNTY ROAD RIGHT–OF–WAY.
19. EROSION CONTROL PLAN IS A GUIDE AND SHALL BE AMENDED AS NECESSARY TO PREVENT EROSION AND ILLICIT DISCHARGES ON A YEAR AROUND BASIS, DEPENDING ON THE SEASON, WEATHER, AND FIELD CONDITIONS. EROSION CONTROL MEASURES IN ADDITION TO THOSE NOTED IN THE PERMITTED PLANS MAY BE NECESSARY. FAILURE TO INSTALL SITE SITE AND SITUATIONALY APPROPRIATE EROSION CONTROL MEASURES MAY RESULT IN VIOLATIONS, FINES, AND A STOPPAGE OF WORK.

STORM DRAINAGE AND STORMWATER MANAGEMENT

1. DEVELOPER IS RESPONSIBLE FOR ALL NECESSARY DRAINAGE FACILITIES WHETHER SHOWN ON THE PLANS OR NOT AND HE OR HIS SUCCESSOR PROPERTY OWNERS ARE RESPONSIBLE FOR THE ADEQUACY AND CONTINUED MAINTENANCE OF THESE FACILITIES IN A MANNER WHICH WILL PRECLUDE ANY HAZARD TO LIFE, HEALTH, OR DAMAGE TO ADJOINING PROPERTY, CONSISTENT WITH NPDES PERMIT CAS612008 / ORDER NO. R2–2009–0047 AND NPDES PERMIT CAS000004/ ORDER NO. 2013–0001–DWQ.
2. DROP INLETS SHALL BE COUNTY STANDARD TYPE 5 UNLESS OTHERWISE NOTED ON THE PLANS. THE DEVELOPER'S ENGINEER SHALL BE RESPONSIBLE FOR THE PROPER LOCATION OF DROP INLETS. WHERE STREET PROFILE GRADE EXCEEDS 6% DROP INLETS SHALL BE SET AT 50O ANGLE CURB LINE TO ACCEPT WATER OR AS SHOWN ON THE PLANS.
3. WHERE CULVERTS ARE INSTALLED THE DEVELOPER SHALL BE RESPONSIBLE FOR GRADING THE OUTLET DITCH TO DRAIN TO AN EXISTING SWALE OR TO AN OPEN AREA FOR SHEET FLOW.
4. UPON INSTALLATION OF DRIVEWAY CONNECTIONS, PROPERTY OWNERS SHALL PROVIDE FOR THE UNINTERRUPTED FLOW OF WATER IN ROADSIDE DITCHES.
5. THE COUNTY SHALL INSPECT UNDERGROUND DRAINAGE IMPROVEMENTS AND STORMWATER MANAGEMENT FEATURES PRIOR TO BACKFILL.

AS–BUILT PLANS STATEMENT

THIS IS A TRUE COPY OF THE AS–BUILT PLANS. THERE (___ WERE) (___ WERE NOT) MINOR FIELD CHANGES – MARKED WITH THE SYMBOL (^). THERE (___WERE) (___ WERE NOT) PLAN REVISIONS INDICATING SIGNIFICANT CHANGES REVIEWED BY THE COUNTY ENGINEER AND MARKED WITH THE SYMBOL△.

DATE _____ SIGNATURE _____

NOTE: THIS STATEMENT IS TO BE SIGNED BY THE PERSON AUTHORIZED BY THE COUNTY ENGINEER TO PERFORM THE INSPECTION WORK. A REPRODUCIBLE COPYOF THE AS–BUILT PLANS MUST BE FURNISHED TO THE COUNTY ENGINEER AFTERCONSTRUCTION.

GEOTECHNICAL ENGINEER OBSERVATION

1. A CONSTRUCTION OBSERVATION LETTER FROM THE RESPONSIBLE GEOTECHNICAL ENGINEER AND ENGINEERING GEOLOGIST DETAILING CONSTRUCTION OBSERVATIONS AND CERTIFYING THAT THE WORK WAS DONE IN ACCORDANCE WITH THE RECOMMENDATIONS IN THE GEOTECHNICAL AND GEOLOGIC REPORTS SHALL BE SUBMITTED PRIOR TO THE GRADING COMPLETION AND RELEASE OF THE BOND.

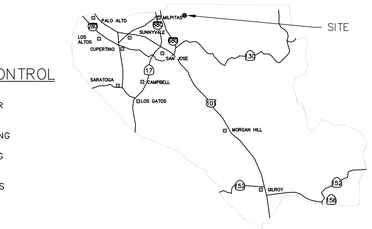

COUNTY LOCATION MAP

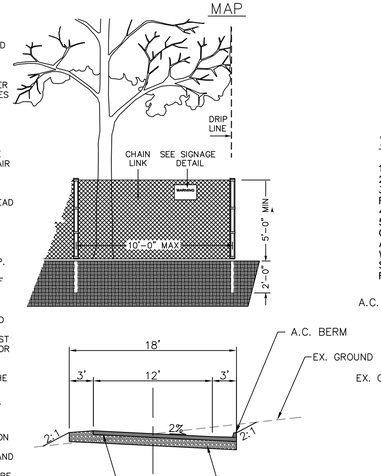

TYPICAL SECTION

PROJECT TITLE
LANDS OF PANGAN

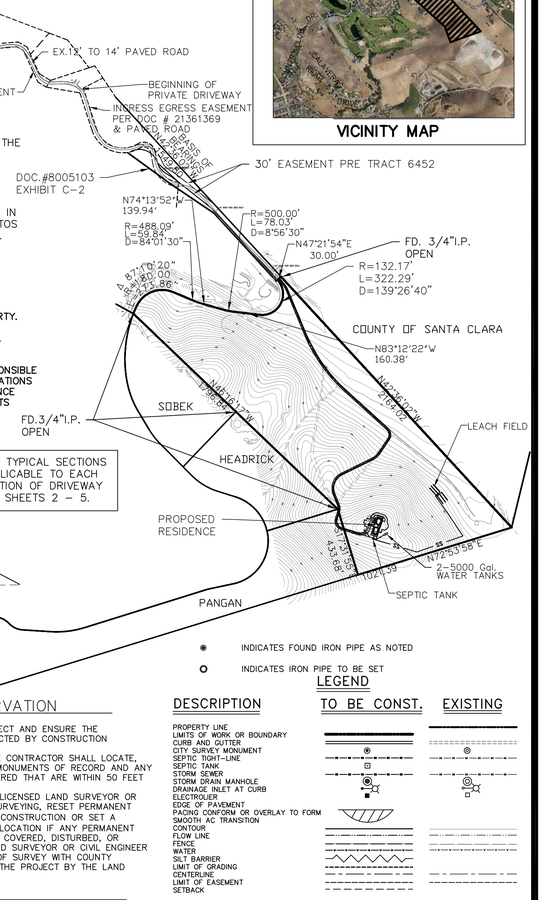

VICINITY MAP

BASIS OF BEARINGS & COORDINATES:
CCS83 ZONE 3 (EPOCH 1992) ESTABLISHED HOLDING THE CITY MILPITAS PUBLISHED COORDINATES FOR BM AUG–TUL AND BM CC–PUMP.

BENCH MARK
EL. 623.20 NAVD88
CITY OF MILPITAS BENCHMARK AUG–TUL, BRASS DISC IN WELL AT INTERSECTION OF AUGUSTA COURT, TULATCITOS DRIVE, PINEHURST COURT, AND COUNTRY CLUB DRIVE.

SURVEY BY JAY WRIGHT LS

SCOPE OF WORK

1. GRADE DRIVEWAY AND BUILDING SITE WITHIN THE PROPERTY.
2. INSTALL EROSION AND SEDIMENT CONTROL MEASURES.
3. INSTALL STORM DRAIN SYSTEMS INCLUDING BIO–SWALES, RETENTION SYSTEMS, CULVERTS AND DISSIPATERS.
4. CONSTRUCT DRAINAGE SWALES.
5. A CONSTRUCTION OBSERVATION LETTER FROM THE RESPONSIBLE GEOTECHNICAL ENGINEER DETAILING CONSTRUCTION OBSERVATIONS AND CERTIFYING THAT THE WORK WAS DONE IN ACCORDANCE WITH THE RECOMMENDATIONS IN THE GEOTECHNICAL REPORTS SHALL BE SUBMITTED PRIOR TO GRADING COMPLETION AND RELEASE OF BOND.

FOR TYPICAL SECTIONS APPLICABLE TO EACH SECTION OF DRIVEWAY SEE SHEETS 2 – 5.

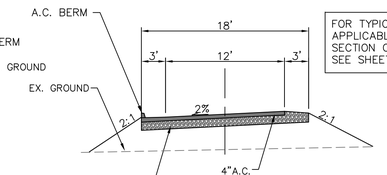

TYPICAL SECTION

EXISTING TREE PROTECTION DETAILS

1. PRIOR TO THE COMMENCEMENT OF ANY GRADING, TREE PROTECTIVE FENCING SHALL BE IN PLACE IN ACCORDANCE WITH THE TREE PRESERVATION PLAN AND INSPECTED BY A CERTIFIED ARBORIST. THE ARBORIST SHAL

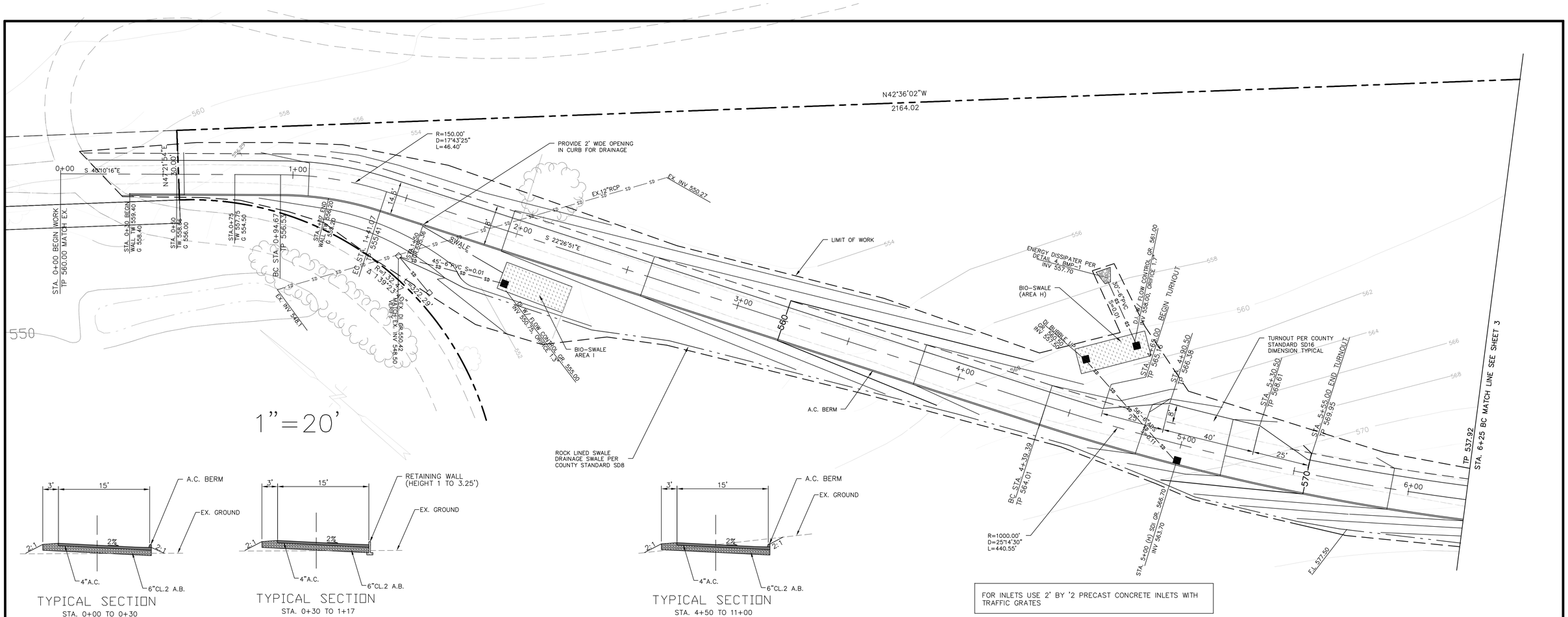

TYPICAL SECTION
STA. 0+00 TO 0+30
STA. 1+17 TO 4+50

TYPICAL SECTION
STA. 0+30 TO 1+17

TYPICAL SECTION
STA. 4+50 TO 11+00

FOR INLETS USE 2' BY '2 PRECAST CONCRETE INLETS WITH TRAFFIC GRATES

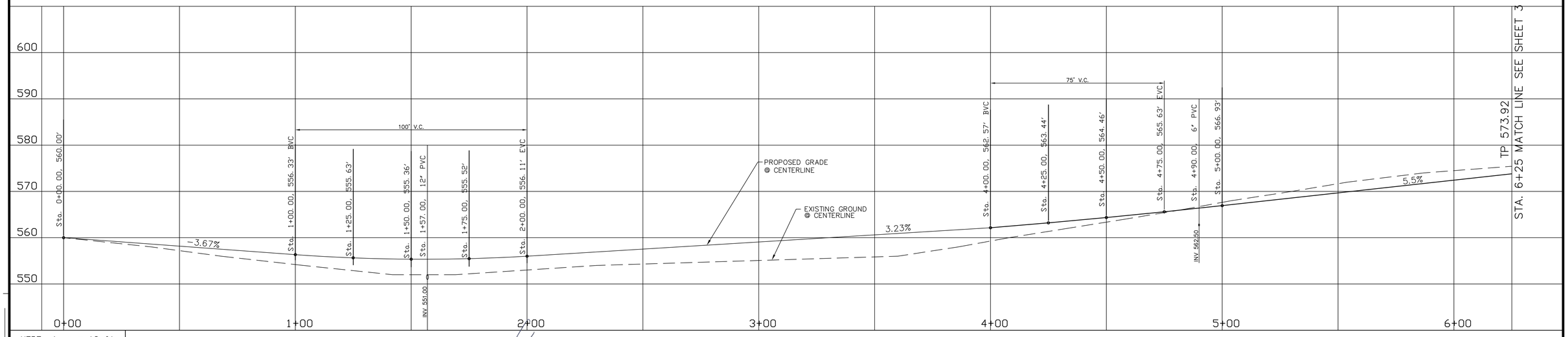

VERT: 1 in = 10 ft
HORZ: 1 in = 20 ft

NO.	BY	DATE	REVISION	BY	DATE

DATE: AUGUST 2018
SCALE: HOR. 1"=20'
VERT. 1"=10'
DESIGNED: JC
CHECKED: KC
PROJ. ENGR: JC

REGISTERED PROFESSIONAL ENGINEER No. 34534 Exp. 9-30-21 CIVIL STATE OF CALIFORNIA
BY: KAREN MYMBAL RCE 34534
DATE:

WESTFALL ENGINEERS, INC.
14583 BIG BASIN WAY, SARATOGA, CA 95070 (408)867-0244

IMPROVEMENT PLAN
LANDS OF PANGAN
APN 029-25-005, MILPITAS, CA

JOB NO. 2013-137
SHEET **C2**

APPLICANT: PANGAN
ROAD: CALERA CREEK HEIGHTS DRIVE
COUNTY FILE NO.:10687-14B=14G-14DR

1"=20'

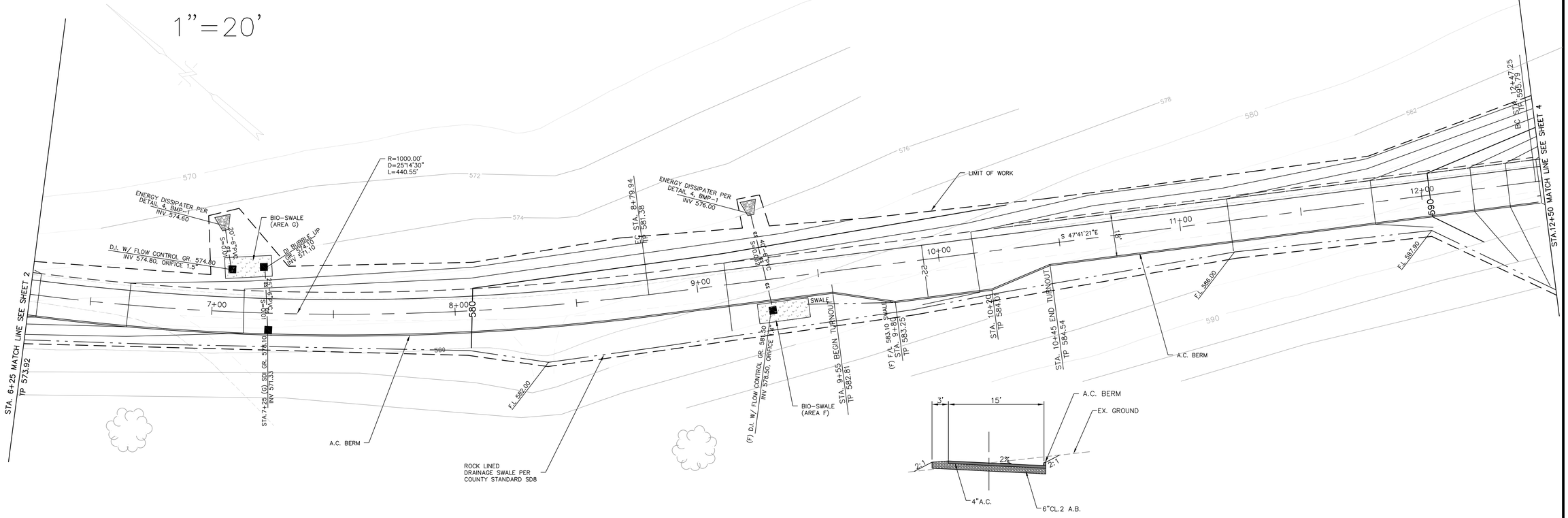

TYPICAL SECTION

STA. 4+50 TO 14+55

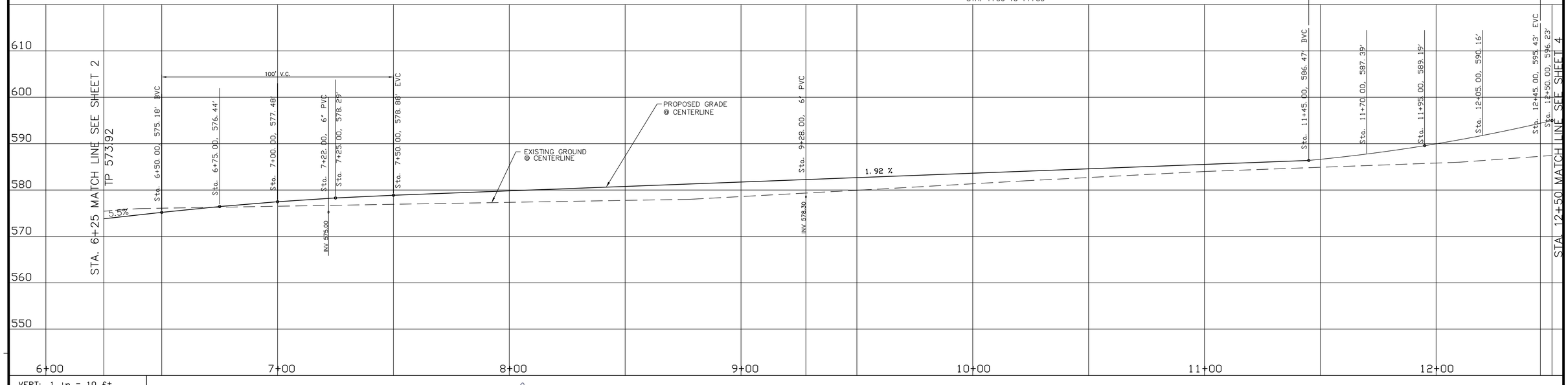

VERT: 1 in = 10 ft
HORZ: 1 in = 20 ft

NO.	BY	DATE	REVISION	BY	DATE

DATE: AUGUST 2018
SCALE: HOR. 1"=20'
VERT. 1"=10'
DESIGNED: JC
CHECKED: KC
PROJ. ENGR: JC

REGISTERED PROFESSIONAL ENGINEER KAREL CYMBAL No. 34534 Exp. 6-30-21 CIVIL STATE OF CALIFORNIA

BY: KAREL CYMBAL, RCE 34534
DATE:

WESTFALL ENGINEERS, INC.
14583 BIG BASIN WAY, SARATOGA, CA 95070 (408)867-0244

IMPROVEMENT PLAN
LANDS OF PANGAN

APN 029-25-005, MILPITAS, CA

JOB NO. 2013-137

SHEET C3

APPLICANT: PANGAN ROAD: CALERA CREEK HEIGHTS DRIVE COUNTY FILE NO.:10687-14B-14C-14DR

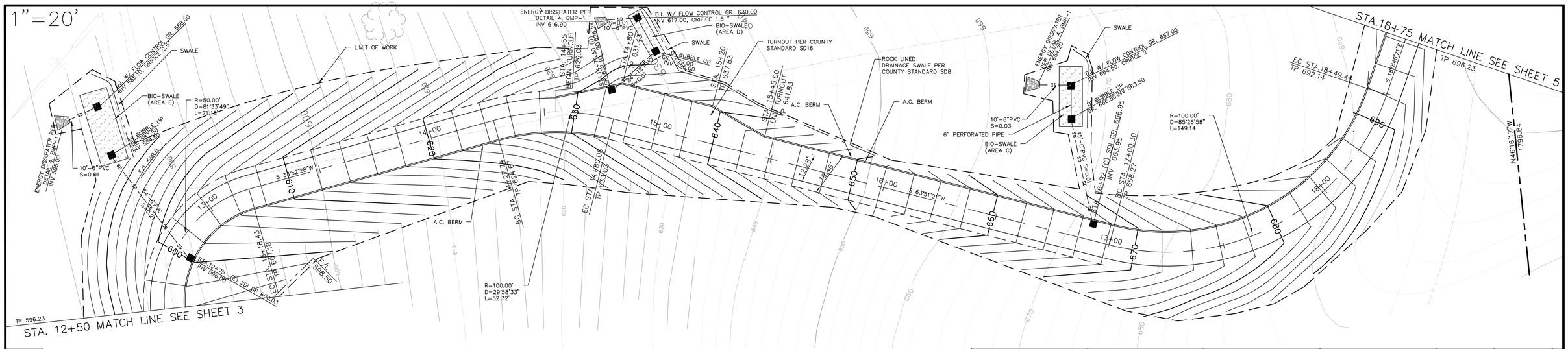

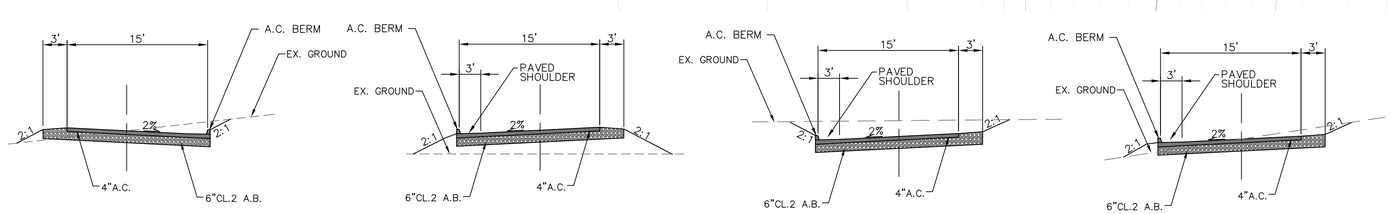

TYPICAL SECTION
STA. 4+50 TO 14+55

TYPICAL SECTION
STA. 14+55 TO 16+00

TYPICAL SECTION
STA. 16+00 TO 18+35
STA. 19+50 TO 20+60

TYPICAL SECTION

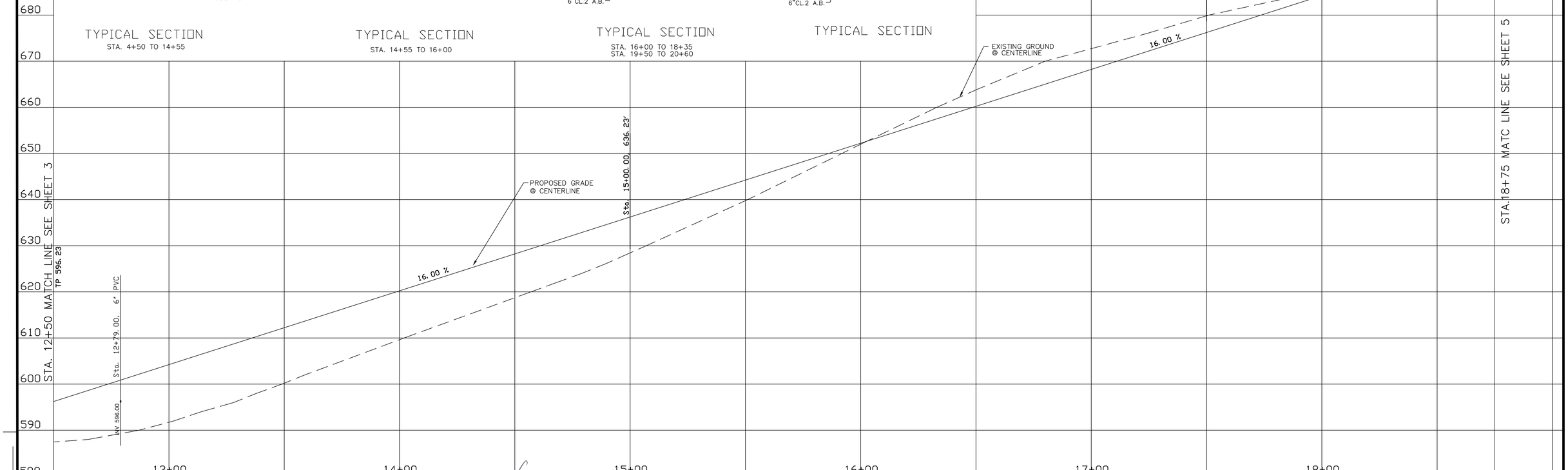

VERT: 1 in = 10 ft
HORZ: 1 in = 20 ft

NO.	BY	DATE	REVISION	BY	DATE

DATE: AUGUST 2018
SCALE: HOR. 1"=20'
VERT. 1"=10'
DESIGNED: JC
CHECKED: KC
PROJ. ENGR: JC

REGISTERED PROFESSIONAL ENGINEER KAREN CYMBALA No. 34534 Exp. 9-30-21 CIVIL STATE OF CALIFORNIA

BY: KAREN CYMBALA RCE 34534
DATE:

WESTFALL ENGINEERS, INC.
14583 BIG BASIN WAY, SARATOGA, CA 95070 (408)867-0244

IMPROVEMENT PLAN
LANDS OF PANGAN
APN 029-25-005, MILPITAS, CA

JOB NO. 2013-137
SHEET **C4**
OF SHEET

APPLICANT: PANGAN
ROAD: CALERA CREEK HEIGHTS DRIVE
COUNTY FILE NO.:10687-14B=14G-14DR

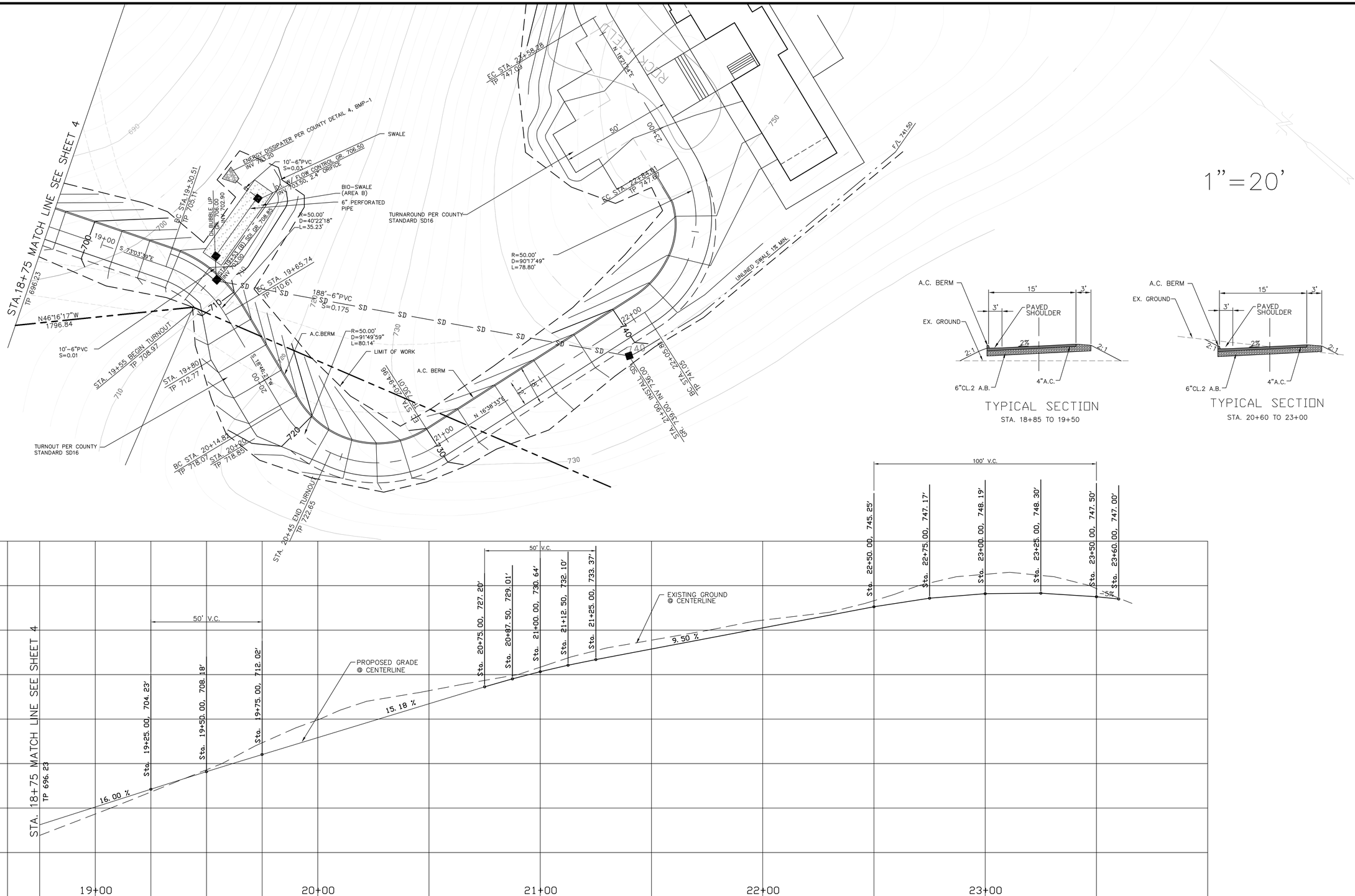

NO.	BY	DATE	REVISION	BY	DATE

DATE: AUGUST 2018
SCALE: HOR. 1"=20'
VERT. 1"=10'
DESIGNED: JC
CHECKED BY: KC
PROJ. ENGR: JC

REGISTERED PROFESSIONAL ENGINEER
KASEY CYMBAL
No. 34534
Exp. 6-30-21
CIVIL
STATE OF CALIFORNIA

BY: KASEY CYMBAL RCE 34534
DATE:

WESTFALL ENGINEERS, INC.
14583 BIG BASIN WAY, SARATOGA, CA 95070 (408)867-0244

IMPROVEMENT PLAN
LANDS OF PANGAN
APN 029-25-005, MILPITAS, CA

JOB NO. 2013-137
SHEET C5

SHEET ___ OF ___

APPLICANT: PANGAN
ROAD: CALERA CREEK HEIGHTS DRIVE
COUNTY FILE NO.:10687-14B=14G-14DR

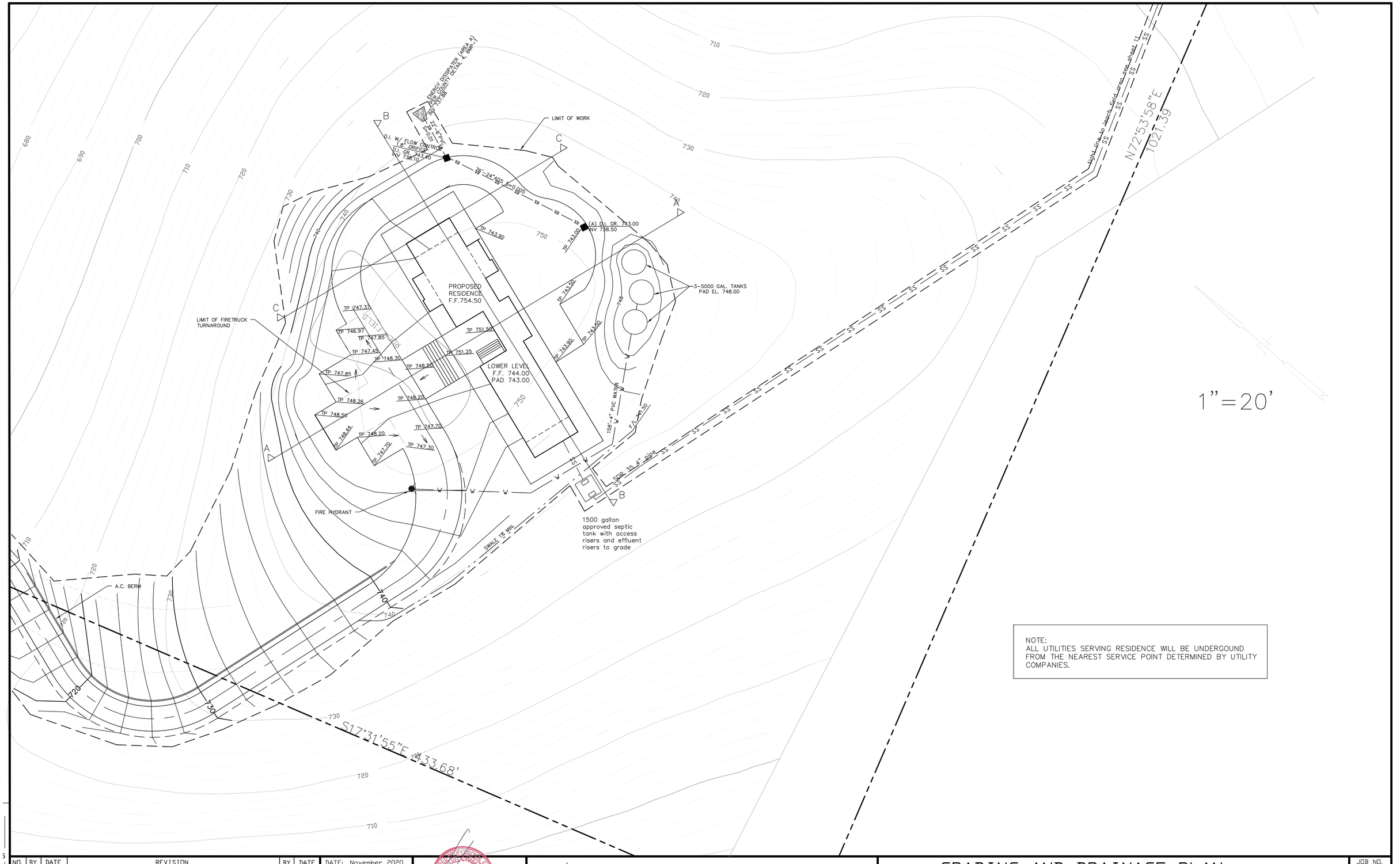

NOTE:
ALL UTILITIES SERVING RESIDENCE WILL BE UNDERGOUND FROM THE NEAREST SERVICE POINT DETERMINED BY UTILITY COMPANIES.

NO.	BY	DATE	REVISION	BY	DATE

DATE: November 2020
SCALE: HOR. 1"=20' VERT. 1"=10'
DESIGNED: JC
CHECKED: KC
PROJ. ENGR: JC

REGISTERED PROFESSIONAL ENGINEER KAREL CYMBAL No. 34534 Exp. 9-30-21 CIVIL STATE OF CALIFORNIA

WESTFALL ENGINEERS, INC.
14583 BIG BASIN WAY, SARATOGA, CA 95070 (408)867-0244

GRADING AND DRAINAGE PLAN
LANDS OF PANGAN
APN 029-25-005, MILPITAS, CA

JOB NO. 2013-137
SHEET C6

APPLICANT: PANGAN ROAD: CALERA CREEK HEIGHTS DRIVE COUNTY FILE NO.:10687-14B=14G-14DR

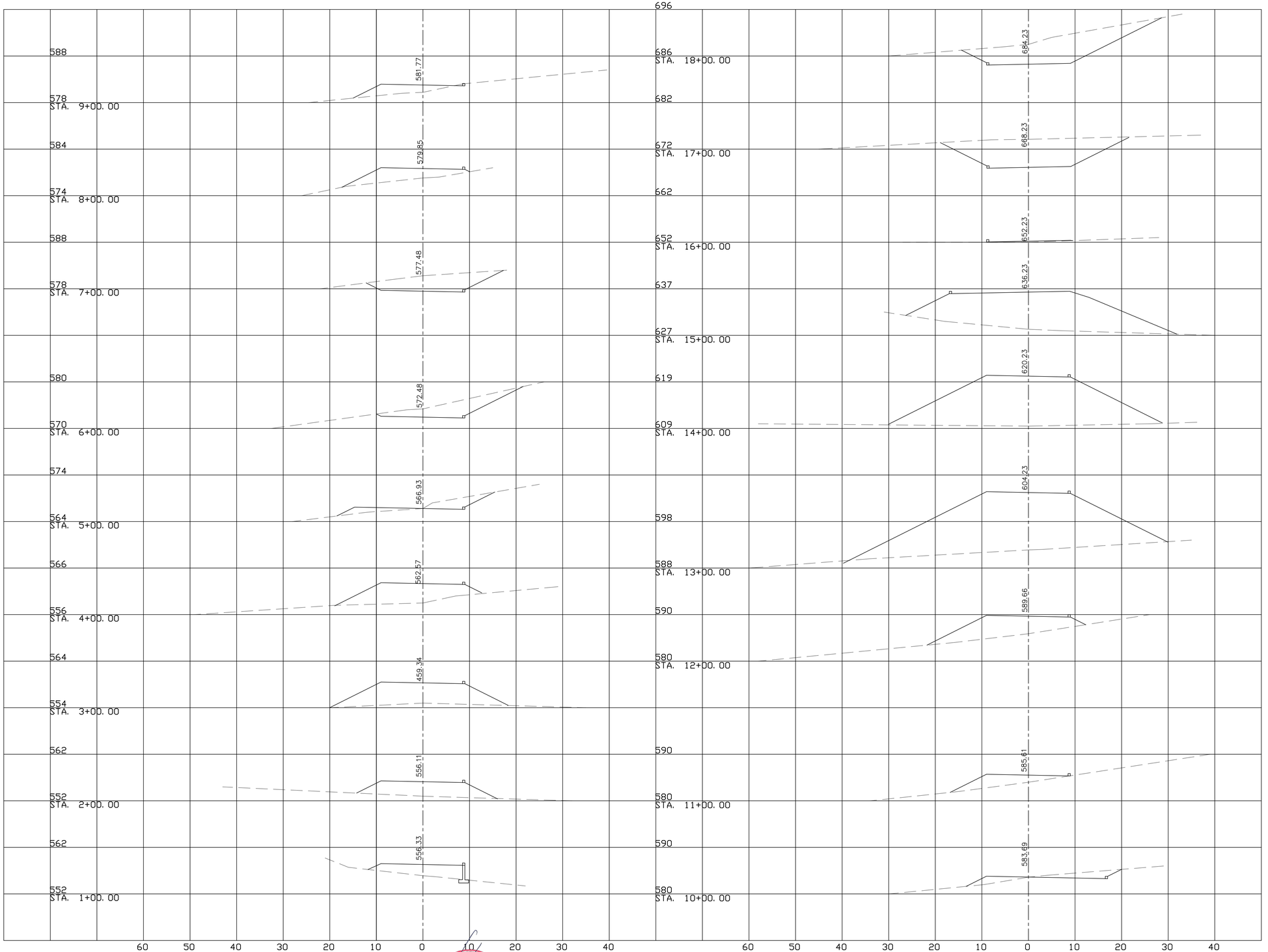

PLAN # ____ SHEET ____ OF ____

NO.	BY	DATE	REVISION	BY	DATE

DATE: AUGUST 2018
SCALE: HOR. 1"=10'
VERT. 1"=10'
DESIGNED: JC
CHECKED BY: KC
PROJ. ENGR: JC

REGISTERED PROFESSIONAL ENGINEER
KAREL CYMBAL
No. 34534
Exp. 12-31-21
CIVIL
STATE OF CALIFORNIA

BY: KAREL CYMBAL # RCE 34534
DATE:

WESTFALL ENGINEERS, INC.
14583 BIG BASIN WAY, SARATOGA, CA 95070 (408)867-0244

SECTIONS
LANDS OF PANGAN
APN 029-25-005, MILPITAS, CA

JOB NO. 2013-137
SHEET **C7**

APPLICANT: PANGAN
ROAD: CALERA CREEK HEIGHTS DRIVE
COUNTY FILE NO.:10687-14B=14G-14DR

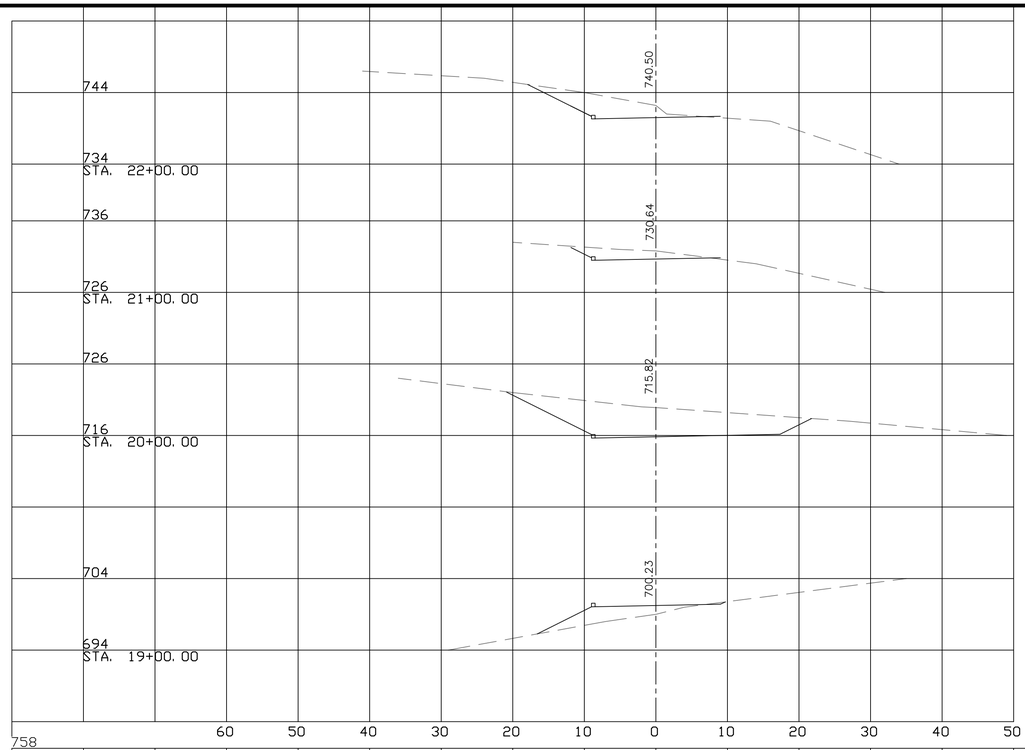

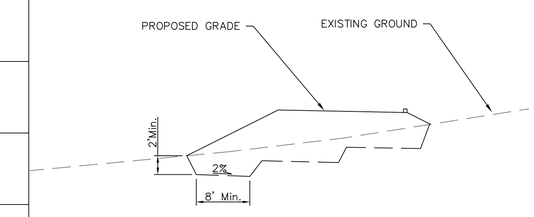

KEY & BENCH DETAIL

PLAN # ____ SHEET ____ OF ____

NO.	BY	DATE	REVISION	BY	DATE

DATE: AUGUST 2018
SCALE: HOR. 1"=10' VERT. 1"=10'
DESIGNED: JC
CHECKED BY: KC
PROJ. ENGR: JC

REGISTERED PROFESSIONAL ENGINEER KAREL CYMBAL No. 34534 Exp. 9-30-21 CIVIL STATE OF CALIFORNIA

BY: KAREL CYMBAL, RCE 34534
DATE:

WESTFALL ENGINEERS, INC.
14583 BIG BASIN WAY, SARATOGA, CA 95070 (408)867-0244

SECTIONS
LANDS OF PANGAN
APN 029-25-005, MILPITAS, CA

JOB NO. 2013-137
SHEET C8

APPLICANT: PANGAN ROAD: CALERA CREEK HEIGHTS DRIVE COUNTY FILE NO.:10687-14B=14G-14DR

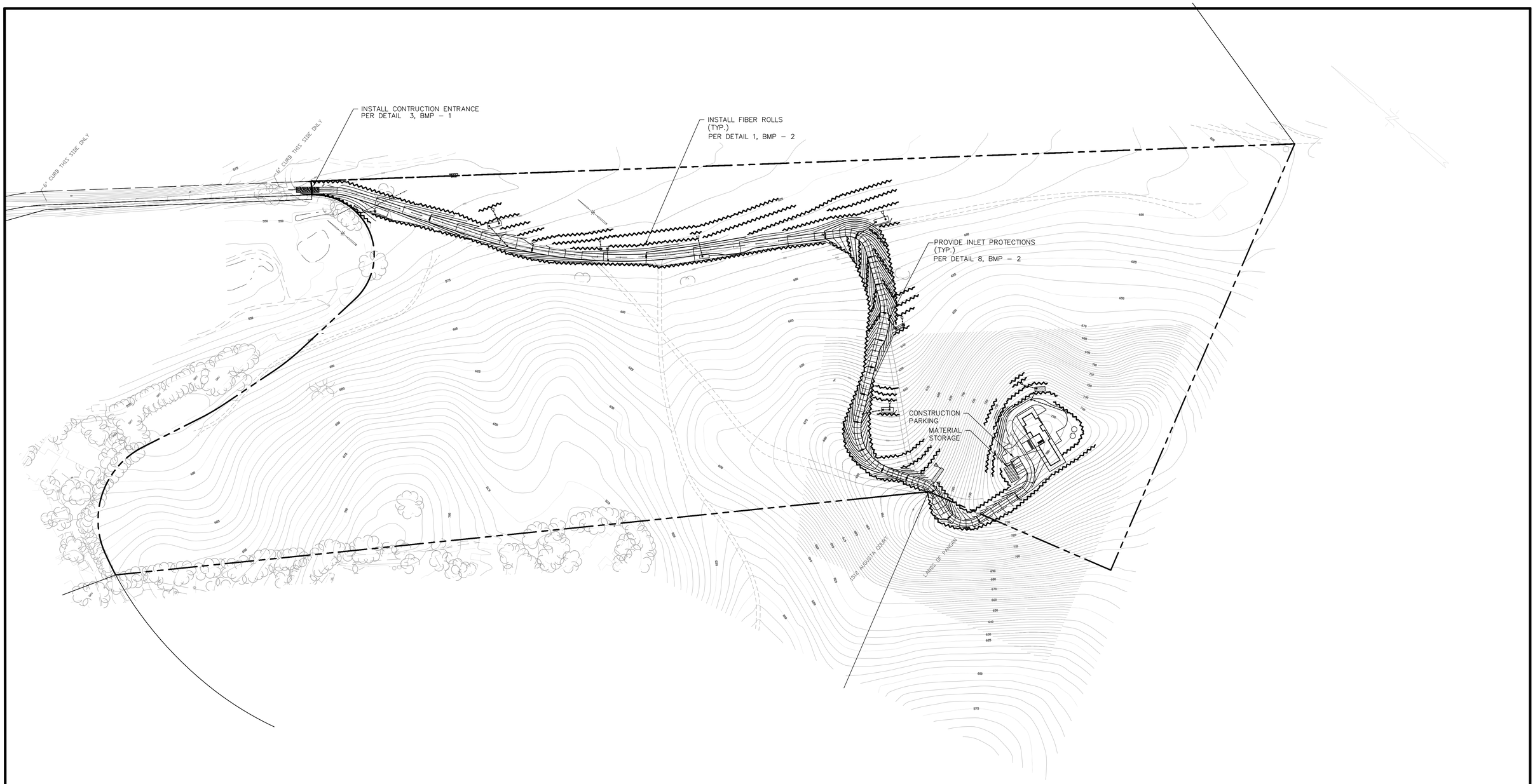

NO.	BY	DATE	REVISION	BY	DATE

DATE: AUGUST, 2018
SCALE: HOR. 1" = 100' VERT.
DESIGNED: JC
CHECKED: KC
PROJ. ENGR: JC

REGISTERED PROFESSIONAL ENGINEER
KAREL CYMBAL
No. 34534
Exp. 9-30-21
CIVIL
STATE OF CALIFORNIA

BY: KAREL CYMBAL, RCE 34534
DATE:

WESTFALL ENGINEERS, INC.
14583 BIG BASIN WAY, SARATOGA, CA 95070 (408)867-0244

EROSION CONTROL PLAN
LANDS OF PANGAN

APN 029-25-005, MILPITAS, CA

JOB NO. 2013-137

SHEET C9

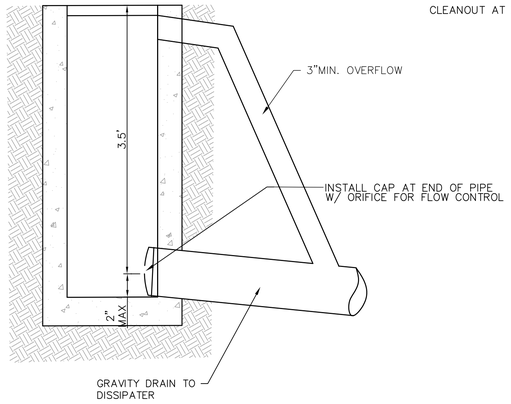

INLET W/
FLOW CONTROL

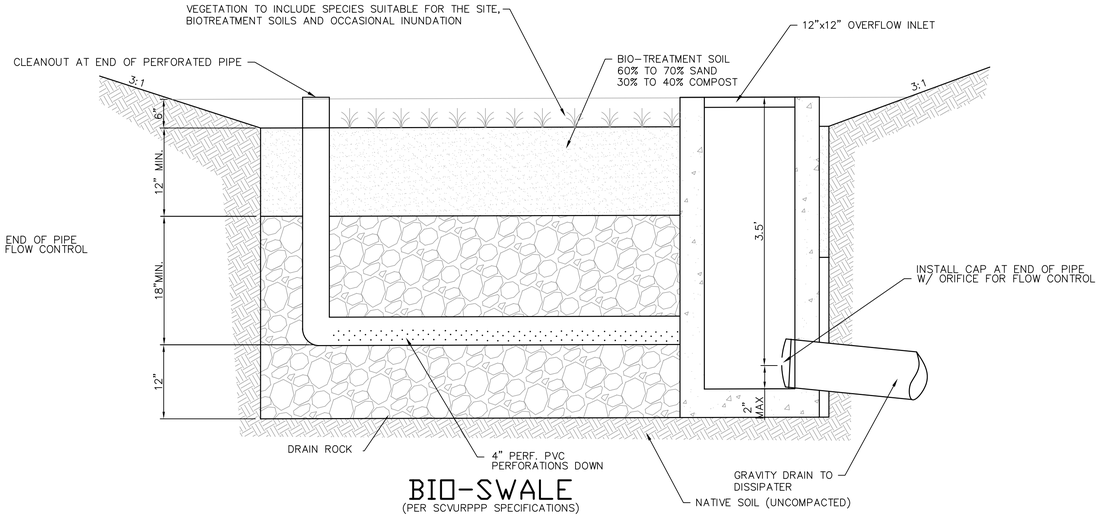

BIO-SWALE
(PER SCVURPPP SPECIFICATIONS)

DRAINAGE AREA	BIOSWALE LENGTH	BIOSWALE WIDTH	BIOSWALE DEPTH	ORIFICE OPENING
A*	N/A	N/A	N/A	1.8"
B	9'	38'	4.5'	2.3"
C	9'	25'	4'	2"
D	6'	20'	4'	1.4"
E	10'	32'	4'	2.5"
F	7'	20'	4.5'	1.4"
G	7'	18'	4.5'	1.4"
H	10'	30'	4.5'	1.7"
I	12'	30'	4.5'	1.3"

* DETENTION FOR AREA A IS PROVIDED BY CLOSED CONDUIT SYSTEM.

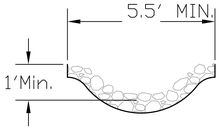

ROCK LINED SWALE

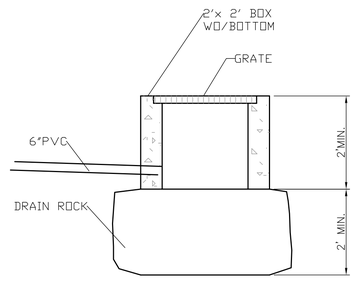

BUBBLE UP
ENERGY DISSIPATOR

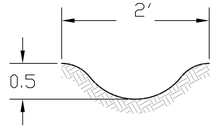

SWALE

NOTES:

STORM DRAIN INLETS WILL BE PRE-CAST CONCRETE CURB INLETS WHERE ADJACENT TO AC BERM SUCH AS SANTA ROSA CAST PRODUCTS MODEL 2 ½ A.

FOR DROP INLETS USE PRE-CAST CONCRETE INLETS SUCH AS SANTA ROSA CAST PRODUCTS MODEL 2K.



DRAINAGE MAP
N.T.S.

NO.	BY	DATE	REVISION	BY	DATE

DATE: AUGUST 2018
SCALE: HOR.
VERT.
DESIGNED: JC
CHECKED: KC
PROJ. ENGR: JC

REGISTERED PROFESSIONAL ENGINEER
NOEL CIMBAL
No. 34534
Exp. 12-31-21
CIVIL
STATE OF CALIFORNIA

BY: NOEL CIMBAL, RCE 34534
DATE:

WESTFALL ENGINEERS, INC.
14583 BIG BASIN WAY, SARATOGA, CA 95070 (408)867-0244

DETAILS
LANDS OF PANGAN
APN 029-25-005, MILPITAS, CA

JOB NO.
2013-137
SHEET
C10

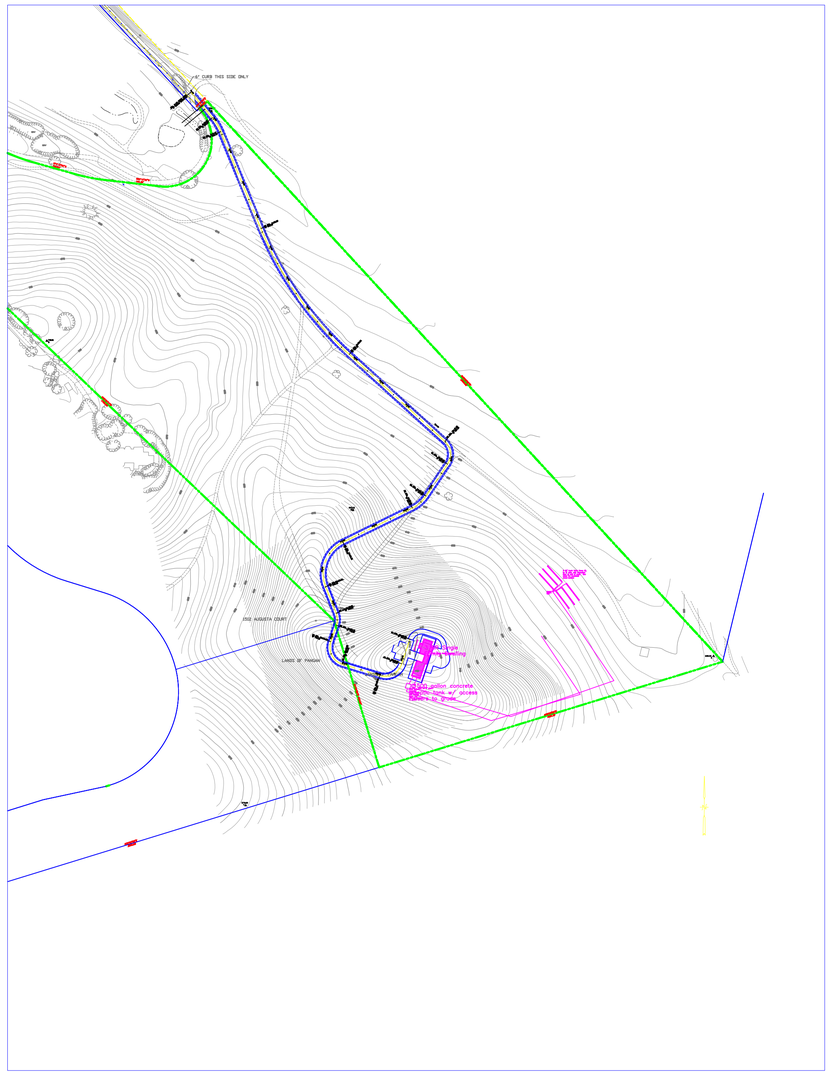

PLAN NOTES:

1. Septic system to serve new 3 BR single family dwelling. System to consist of new 1500 gallon septic tank w/ effluent filter, access risers to grade, 4" SDR35 tightlines, approved diversion valve, 2- D-5 Distribution Boxes, and 2 times 160 feet of 2' wide by 1' flow depth leachfields., with inspection risers at 1 end of each.
2. Diversion valve and distribution boxes to be set in concrete (1-2 bags) so as to provide a solid foundation, and to insure box remains level.
3. Excess dirt to be spread on site.
4. Call EHS at 408 918-3462 at least 24 hours before start of construction.
6. All work is to conform the requirements of the Santa Clara County Sewage Disposal Ordinance.

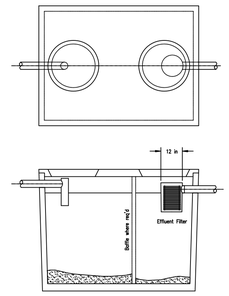

TYPICAL SEPTIC TANK DETAIL
(dimensions, construction and installation should conform to applicable local and state regulations)

JENSEN PRECAST DISTRIBUTION BOX

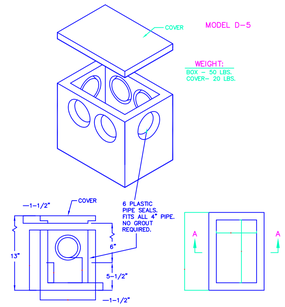

Distribution box is to be set in concrete (1-2 bags) so as to provide a solid foundation, and to insure box remains level.

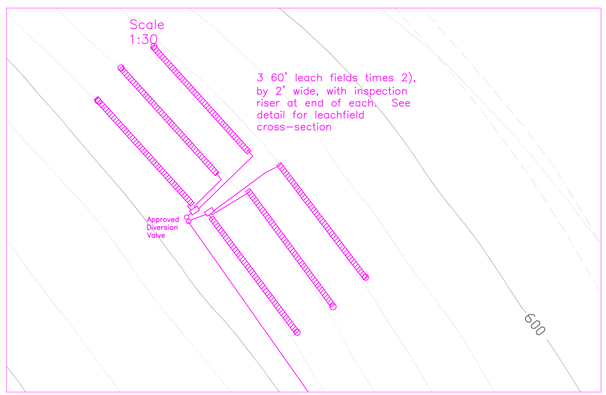

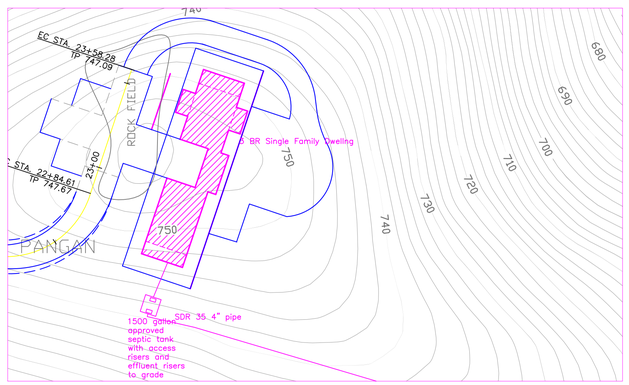

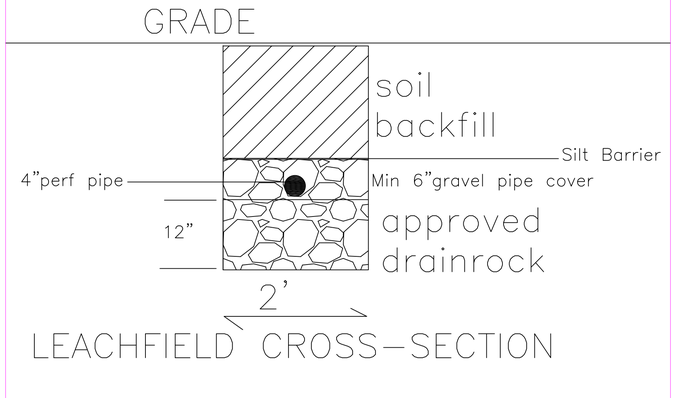

LEACHFIELD CROSS-SECTION

General Notes

No.	Revision/Issue	Date

Firm Name and Address

Plan By:
Environmental Concepts
P.O. Box 1445
Aptos, CA 95001
(831) 684-1555
envconceptsken@gmail.com

Project Name and Address

A Septic System Design for:
THE PANGAN SFD Felter Road
Milpitas, CA
APN 029-25-005

Project	14-SCL-001
Date	Sept 18, 2014
Scale	Varies
Sheet	C11

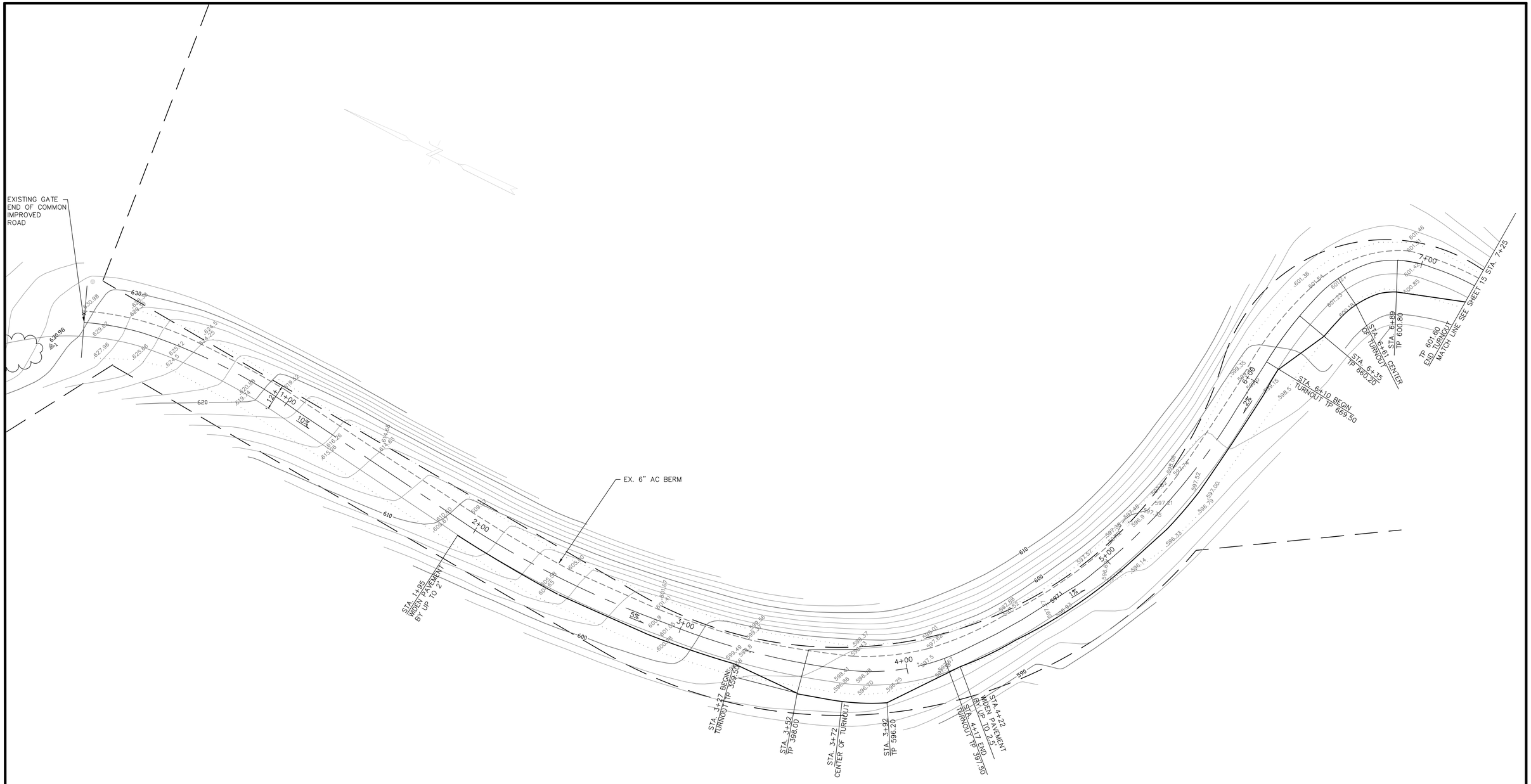

NO.	BY	DATE	REVISION	BY	DATE

DATE: August 2020
SCALE: HOR. 1"=20' VERT.
DESIGNED: JC
CHECKED: KC
PROJ. ENGR: JC

REGISTERED PROFESSIONAL ENGINEER
KAREN CHAMBA
No. 34534
Exp. 9-30-21
CIVIL
STATE OF CALIFORNIA

WESTFALL ENGINEERS, INC.
14583 BIG BASIN WAY, SARATOGA, CA 95070 (408)867-0244

ACCESS DRIVEWAY
LANDS OF PANGAN

APN 029-25-005, MILPITAS, CA

JOB NO. 2013-137

SHEET C12

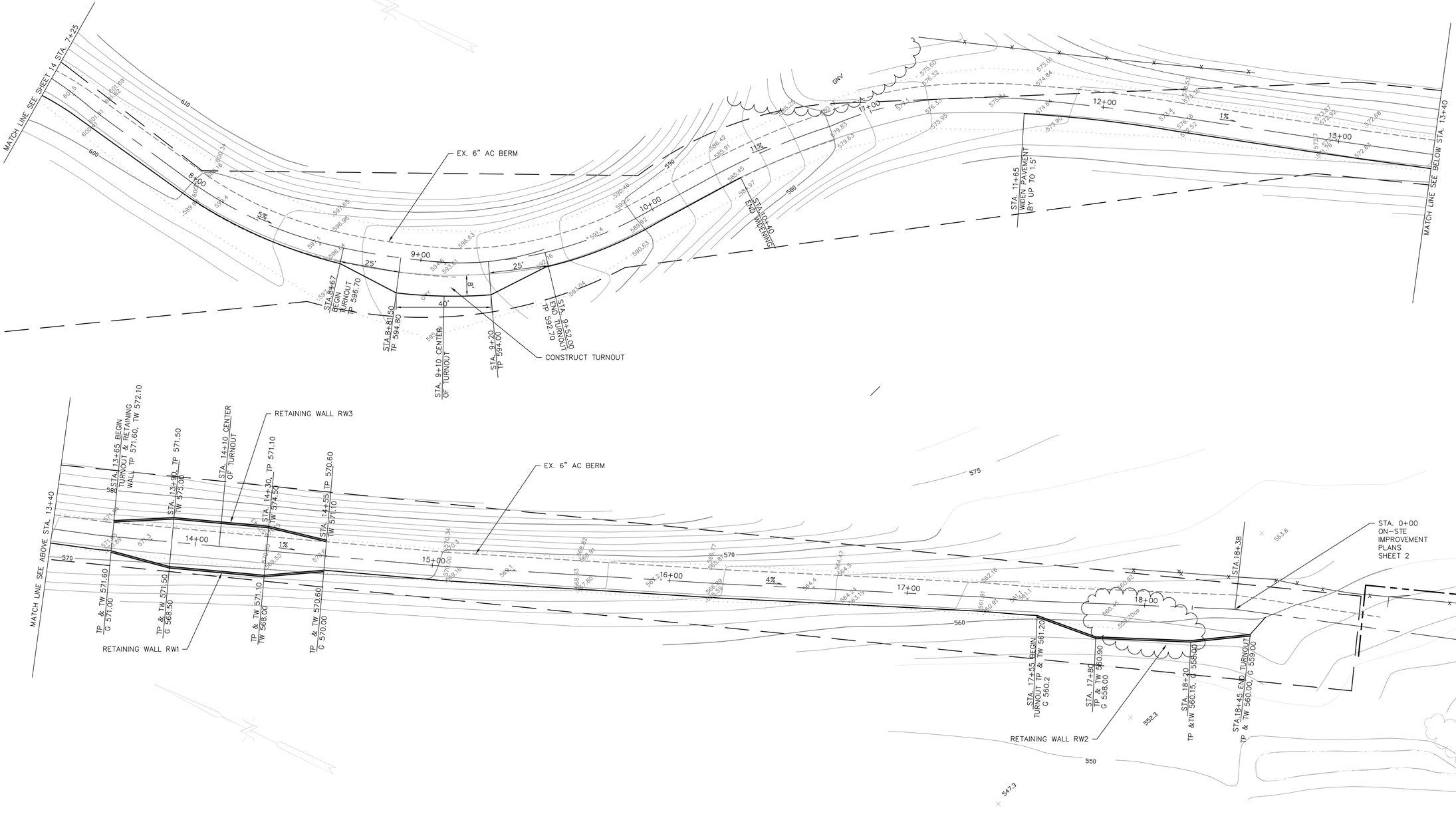

NO.	BY	DATE	REVISION	BY	DATE

DATE: August 2020
SCALE: HOR. 1"=20' VERT.
DESIGNED: JC
CHECKED: KC
PROJ. ENGR: JC

REGISTERED PROFESSIONAL ENGINEER — No. 34134 — Ex. 9-30-21 — CIVIL — STATE OF CALIFORNIA

WESTFALL ENGINEERS, INC.
14583 BIG BASIN WAY, SARATOGA, CA 95070 (408) 867-0244

ACCESS DRIVEWAY
LANDS OF PANGAN
APN 029-25-005, MILPITAS, CA

JOB NO. 2013-137
SHEET C13

RETAINING WALLS STRUCTURAL NOTES

GENERAL

These plans are intended for use by knowledgeable licensed contractors only, familiar with all applicable building codes and other governmental or industry requirements and able and willing to provide workmanship and materials of high quality. The intent of these drawings is to show all items necessary to complete the structure. For items, methods and/or materials not shown, the minimum requirements of the 2019 edition of California Building Code (CBC) shall govern. All work and construction shall comply with all other applicable building codes, soil reports, regulations and safety requirements.
Typical details and notes on these sheets shall apply unless specifically shown or noted otherwise. Details not fully shown or noted shall be similar to details shown for similar conditions. Any ambiguities or doubts shall be resolved, unless the Engineer specifies otherwise in writing, in favor of the construction or material of highest quality. Written information and dimension shall take precedence over graphic information. Do not scale the drawings.
The contractor shall compare the structural drawings with architectural drawings and shall inform the architect/engineer in writing, during the bidding period, of any discrepancies in the drawings or in the specifications or of any variations needed in order to conform to codes, rules and regulations. Upon receipt of such information, the architect/engineer will send written instructions to all concerned. Any discrepancy, omission, or variation not reported shall be the responsibility of the contractor, and work shall be performed in a manner as directed by the architect/engineer.
The contractor shall check and verify all dimensions with the architectural, electrical and mechanical drawings before preparing shop drawings, fabrication or construction. See architectural, electrical and mechanical drawings for size and locations of pipes, sleeves, pits, vents, ducts, and detail not shown on the structural drawings.
Any deviations from the plans which are necessitated by field conditions or any conditions different from those indicated on the drawings, shall be called to the attention of the Westfall Engineers, Inc., prior to continuing with construction.
It shall be the contractor's sole responsibility to design and provide adequate shoring, bracing, and formwork, etc., as required for the protection of life and property during the construction of this building. Shoring and bracing shall remain in place until floors, roof, and wall sheathing have been entirely constructed. Shoring drawings and calculations shall be sealed by registered engineer and submitted to architect/engineers for review.

FOUNDATIONS

Foundations design is based on a geotechnical report by: Earth Systems, File No. 302817-001 (SH-12322-SA, dated September 17, 2020

1) The vertical soil cuts must be provided with proper shoring to protect the workers and adjacent property. The contractor shall be solely responsible for all excavation procedures including lagging, shoring, and the protection of adjacent property, structures, streets and utilities. All work and construction shall comply with all applicable building codes, California OSHA regulations and safety requirements.
2) An adequate drainage system shall be provided to collect and transport runoff water to the discharge facilities. All retaining walls shall have at the bottom, perforated back-of-wall drains.
3) It shall be the contractor's sole responsibility to design and provide adequate shoring, bracing, and formwork, etc., as required for the protection of life and property during the construction of this building. Shoring and bracing shall remain in place until floors, roof, and wall sheathing have been entirely constructed.
4) Shoring drawings and calculations shall be sealed by registered engineer and submitted to architect/engineers for review.

CONCRETE

1) Concrete shall be ready mixed conforming to ASTM C 94, ACI 301 and ACI 318-14. All concrete shall be of regular weight (144 PCF) with Type II cement per ASTM C 150 and potable water. The aggregate shall be hardrock, to be approved the engineer.

The following minimum 28-day concrete strength:

	STRENGTH @ 28 DAYS	SLUMP	AGG. SIZE	WATER CEMENT RATIO
Stem Wall	2500 psi	3-1/2"(±)	3/4"	0.45 to 0.50
Spread footing foundations	2500 psi	3-1/2"(±)	3/4"	0.45 to 0.50
Grade beam and pier foundations	N/A			

Use a minimum of 5 sacks of cement per cubic yard for 2000 psi concrete and 6 sacks for 3000 psi concrete.

2) Forms shall be properly constructed conforming to concrete surface as shown on the drawings, sufficiently tight to prevent leakage, sufficiently strong and braced to maintain their shape and alignment until no longer needed to support the concrete.
3) Horizontal construction joints shall be located as shown on the drawings, and the hardened concrete surface shall be cleaned by sandblasting or other approved means to expose firmly embedded aggregates prior to pouring additional concrete in contact with these surfaces.
4) Vertical construction joints shall be formed and keyed and not over 90 feet apart.
5) All items to be cast in concrete such as reinforcing, dowels, bolts, anchors, pipe, sleeves, etc. shall be securely positioned in the forms before placing the concrete. See architectural, electrical, and mechanical drawings for size and location of pipes, sleeves, pits and details not shown on these structural drawings. All dimensions are to be checked and verified with the architectural, electrical and mechanical drawings.
6) Minimum embedment for anchor bolts in concrete shall be 8", unless specifically noted otherwise.
7) The contractor shall inform the architect/engineer at least 2 days prior to pouring any structural concrete so that he may have the opportunity of reviewing the work prior to pouring.

REINFORCING STEEL

1) All reinforcing steel shall be new stock deformed bars conforming to ASTM A 615, A 616, A 617, A 706, A767, and A 775, Grade 60, unless noted otherwise (UNO).
2) Welded wire fabric shall not be used, UNO.
3) Splices in continuous reinforcement as used in walls, grade beams etc. shall have a lap of 36 bar diameters and the splices in adjacent bars shall be not less than 5'-0" apart, UNO. Lap fabric splices in welded wire fabric shall be mesh spacing +2", but not less than 6".
4) Lap splice in masonry shall be 48 bar diameter minimum.
5) Reinforcing spacing given is minimum on center and all reinforcing is continuous unless otherwise noted.
6) All reinforcing steel shall be securely wired and properly supported above ground and away from the form.
7) Reinforcing bar fabrication laps and placing shall conform to the manual of standard practice of the Western Concrete Reinforcing Steel Institute, UNO.

CONSTRUCTION REVIEW

Structural observation shall be provided per Chapter 17, 2013 CBC. In addition a field construction review by the design engineer or his representative is recommended for the following:

Reinforcing Steel

In case the field review is not performed by the design engineer of the original work, the client agrees to indemnify and hold the engineer harmless from any liability, real or alleged, in connection with any portion of the project. Westfall Engineers, Inc., requires 48 hours notification prior to construction review. Call Westfall Engineers, Inc., at (408) 867-0244.

DESIGN REVIEW BY THE SOIL ENGINEER AND CONSTRUCTION REVIEW BY THE SOIL ENGINEER FOR THE EXCAVATION AND BACKFILL IS REQUIRED.

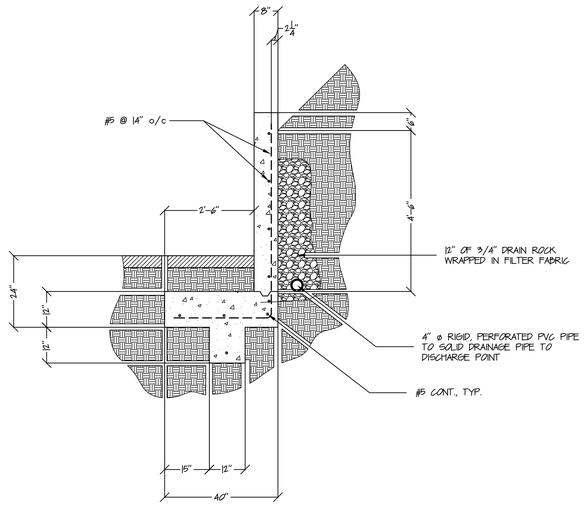

2/S1 RETAINING WALL RW-3, Sta 13+65 to Sta 14+55
NOT TO SCALE

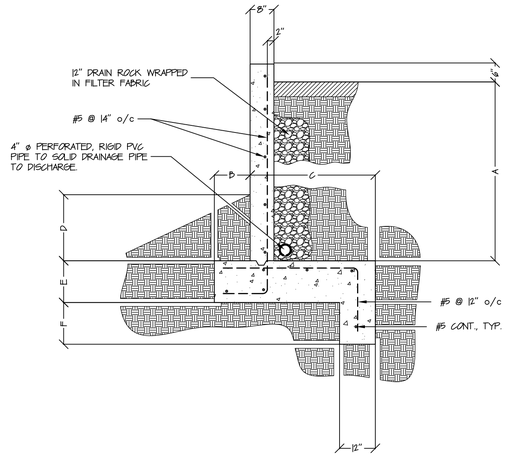

WALL NO.	STATION	A	B	C	D	E	F	REMARKS
RW-1	13+65 to 14+55	6'-0"	12"	3'-6"	3'-0"	1'-4"	12"	
RW-2	17+55 to 18+45	5'-6"	12"	3'-0"	2'-0"	1'-4"	12"	

1/S1 RETAINING WALL RW-1 and RW-2
NOT TO SCALE

EXTERIOR RETAINING WALLS
LANDS OF PANGAN
1512 Augusta Road Milpitas, California

WESTFALL ENGINEERS, INC.
14583 BIG BASIN WAY TEL. (408) 867-0244
SARATOGA, CA 95070 FAX (408) 867-6261

NO.	BY	DATE
	K.C.	

REVISION

DATE: November 16, 2020
SCALE : not to scale
DESIGNED BY : K.C.
SUPERVISED BY: K.C.

SUBMITTED BY

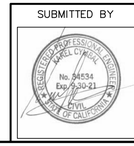

JOB NO.
2013-137

SHEET
OF S1
16

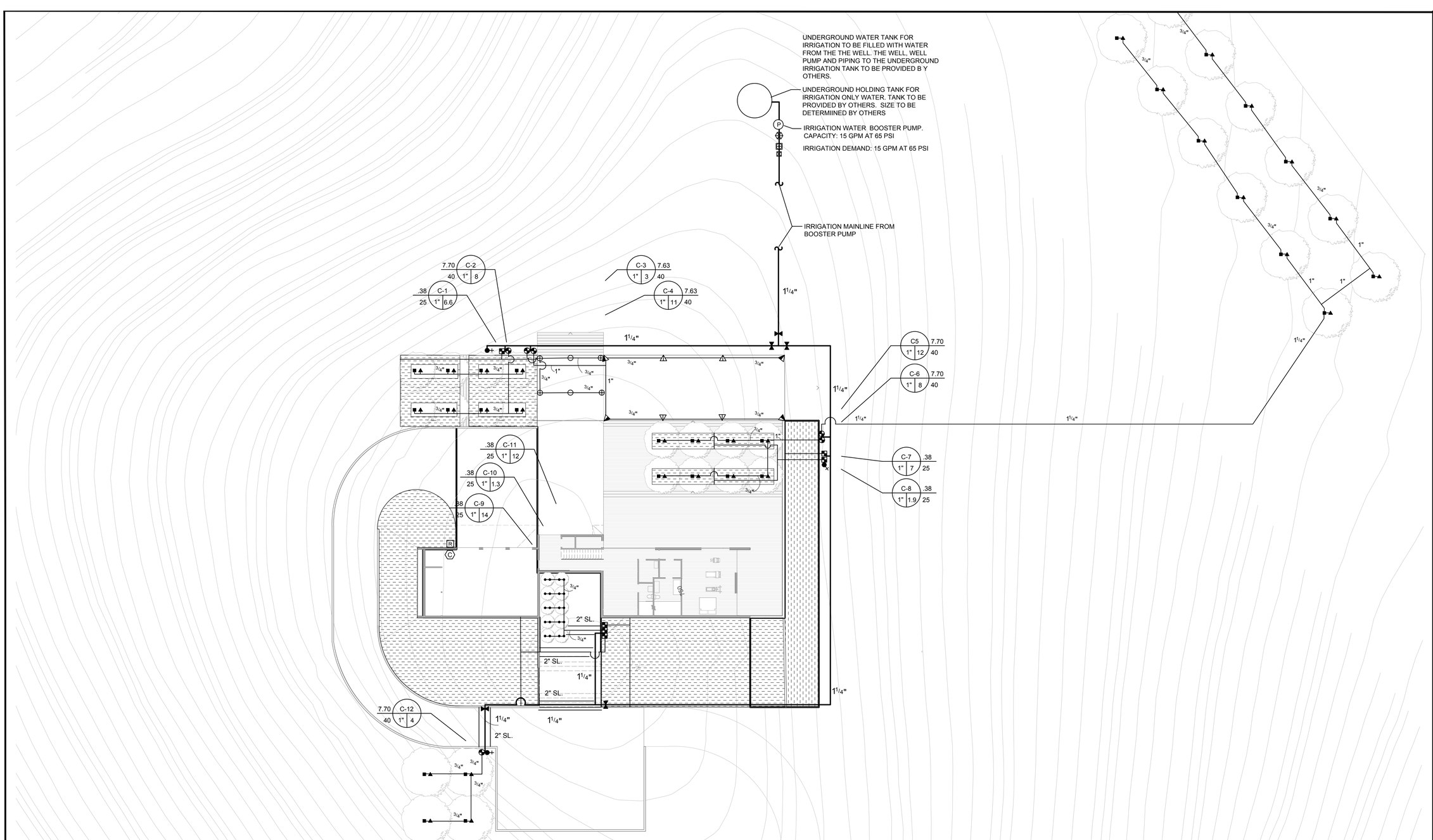

1 / I1 IRRIGATION PLAN

SCALE: 1/16" = 1'-0"

BROOKWATER
IRRIGATION CONSULTANTS
480 ST. JOHN STREET, SUITE 220
PLEASANTON, CALIFORNIA 94566
TEL 925.855.0417 FAX 925.855.0357
E-MAIL ANN@BROOKWATER.COM

N

Stamp

LICENSED LANDSCAPE ARCHITECT
Christopher Yates 4593
Signature
Renewal Date
Date
STATE OF CALIFORNIA

1265 Indiana Street
San Francisco Ca. 94107
P. 415.926.5775
C. 415.271.1899
www.fieldarch.com

JANET S. LUEHRS
Certified Irrigation Designer
CID
43274

PANGAN RESIDENCE
AUGUST COURT
MILPITAS, CA 95035

Revisions:

IRRIGATION PLAN

SCALE : 1/16" = 1'-0"

DATE : 5/4/2018

SHEET : I-1

IRRIGATION NOTES

1. THE CONTRACTOR SHALL REVIEW RELATED DRAWINGS AND SHALL ENSURE COORDINATION WITH ALL APPLICABLE TRADES PRIOR TO SUBMITTING BID.

2. THE IRRIGATION SYSTEM SHALL BE INSTALLED IN CONFORMANCE WITH ALL APPLICABLE STATE AND LOCAL CODES AND ORDINANCES BY LICENSED CONTRACTORS AND EXPERIENCED WORKMEN. CONTRACTOR SHALL OBTAIN AND PAY FOR ALL REQUIRED PERMITS AND FEES RELATING TO HIS WORK.

3. THIS DESIGN IS DIAGRAMMATIC. ALL PIPING, VALVES, ETC. SHOWN WITHIN PAVED AREAS IS FOR DESIGN CLARIFICATION ONLY AND SHALL BE INSTALLED IN PLANTING AREAS WHERE POSSIBLE. AVOID ANY CONFLICTS BETWEEN THE SPRINKLER SYSTEM, PLANTING AND ARCHITECTURAL FEATURES. PARALLEL PIPES MAY BE INSTALLED IN COMMON TRENCH. PIPES ARE NOT TO BE INSTALLED DIRECTLY ABOVE ONE ANOTHER.

4. DO NOT WILLFULLY INSTALL THE SPRINKLER SYSTEM AS SHOWN ON THE DRAWINGS WHEN IT IS OBVIOUS IN THE FIELD THAT OBSTRUCTIONS, GRADE DIFFERENCES OR DIFFERENCES IN THE AREA DIMENSIONS EXIST THAT MIGHT NOT HAVE BEEN CONSIDERED IN THE ENGINEERING. SUCH OBSTRUCTIONS OR DIFFERENCES SHOULD BE BROUGHT TO THE ATTENTION OF THE OWNER'S AUTHORIZED REPRESENTATIVE. IN THE EVENT THAT THIS NOTIFICATION IS NOT PERFORMED, THE IRRIGATION CONTRACTOR SHALL ASSUME FULL RESPONSIBILITY FOR ANY REVISIONS NECESSARY.

5. IT IS THE RESPONSIBILITY OF THE IRRIGATION CONTRACTOR TO FAMILIARIZE HIMSELF WITH ALL GRADE DIFFERENCES, LOCATION OF WALLS, RETAINING WALLS, ETC. HE SHALL COORDINATE HIS WORK WITH THE GENERAL CONTRACTOR AND OTHER SUBCONTRACTORS FOR THE LOCATION AND THE INSTALLATION OF PIPE SLEEVES THROUGH WALLS, UNDER ROADWAYS, PAVING, STRUCTURES, ETC. CONTRACTOR TO VERIFY THE LOCATION OF EXISTING UNDERGROUND UTILITIES AND STRUCTURES PRIOR TO THE EXCAVATION OF TRENCHES. CONTRACTOR IS TO REPAIR ANY DAMAGE CAUSED BY HIS WORK AT NO ADDITIONAL COST TO THE OWNER.

6. DUE TO THE SCALE OF THE DRAWINGS, IT IS NOT POSSIBLE TO INDICATE ALL OFFSETS, FITTINGS, SLEEVES, ETC., WHICH MAY BE REQUIRED. THE CONTRACTOR SHALL CAREFULLY INVESTIGATE THE STRUCTURAL AND FINISHED CONDITIONS AFFECTING ALL OF HIS WORK AND PLAN HIS WORK ACCORDINGLY, FURNISHING SUCH FITTINGS, ETC., AS MAY BE REQUIRED TO MEET SUCH CONDITIONS. DRAWINGS ARE GENERALLY DIAGRAMMATIC AND INDICATIVE OF THE WORK TO BE INSTALLED. THE WORK SHALL BE INSTALLED IN SUCH A MANNER AS TO AVOID CONFLICTS BETWEEN IRRIGATION SYSTEMS, PLANTING, AND ARCHITECTURAL FEATURES.

7. ELECTRICAL CONTRACTOR TO SUPPLY 120 VAC (2.5 AMP) SERVICE TO CONTROLLER LOCATION. IRRIGATION CONTRACTOR TO MAKE FINAL CONNECTION FROM ELECTRICAL STUB-OUT TO CONTROLLER. IRRIGATION CONTROL WIRE SHALL BE #14, U.L. APPROVED FOR DIRECT BURIAL. COMMON WIRE SHALL BE #12 U.L. APPROVED AND SHALL BE WHITE IN COLOR. WIRING TO INDIVIDUAL REMOTE CONTROL VALVES SHALL BE COLOR OTHER THAN WHITE.

8. EACH CONTROLLER SHALL HAVE ITS OWN INDEPENDENT GROUND WIRE.

9. REMOTE CONTROL VALVES SHALL BE WIRED TO CONTROLLER IN SEQUENCE AS SHOWN ON PLANS. RUN WIRE FROM EACH RCV TO THE CONTROLLER. SPLICING WIRES TOGETHER OUTSIDE OF VALVE BOXES WILL NOT BE PERMITTED.

10. SPLICING OF 24-VOLT WIRES WILL NOT BE PERMITTED EXCEPT IN VALVE BOXES. LEAVE A 36" COIL OF EXCESS WIRE AT EACH SPLICE AND 100 FEET ON CENTER ALONG WIRE RUN. TAPE WIRE IN BUNDLES 10 FEET ON CENTER. NO TAPING PERMITTED INSIDE SLEEVES.

11. INSTALL ONE (1) SPARE CONTROL WIRE FOR EVERY 6 (SIX) STATIONS ON THE CONTROLLER ALONG THE ENTIRE MAIN LINE. SPARE WIRES SHALL BE THE SAME COLOR (ONE WITH A WHITE STRIPE) AND OF A DIFFERENT COLOR THAN OTHER CONTROL WIRES. LOOP 36" EXCESS WIRE INTO EACH SINGLE VALVE BOX AND INTO ONE VALVE BOX IN EACH GROUP OF VALVES.

12. VALVE LOCATIONS SHOWN ARE DIAGRAMMATIC. INSTALL IN GROUND COVER/SHRUB AREAS WHERE POSSIBLE (NOT IN LAWN AREA.)

13. INSTALL VALVE BOXES MINIMUM 12" FROM AND PERPENDICULAR TO WALK, CURB, LAWN, BUILDING OR LANDSCAPE FEATURE. AT MULTIPLE VALVE BOX GROUPS, EACH BOX SHALL BE AN EQUAL DISTANCE FROM THE WALK, CURB, LAWN, ETC. AND EACH BOX SHALL BE MINIMUM 12" APART. SHORT SIDE OF VALVE BOXES SHALL BE PARALLEL TO WALK, CURB, LAWN, ETC.

14. ALL SPRINKLER HEADS SHALL BE SET PERPENDICULAR TO FINISH GRADE OF THE AREA TO BE IRRIGATED UNLESS OTHERWISE DESIGNATED ON THE PLANS.

15. IN LOCATIONS WHERE LOW HEAD DRAINAGE WILL CAUSE EROSION AND EXCESS WATER, USE POP-UP SPRINKLER MODELS WITH INTEGRAL CHECK VALVE OR A KING BROS. CV SERIES CHECK VALVE ON SHRUB RISERS IN LIEU OF SCHEDULE 80 COUPLING. FOR DRIP OR BUBBLER CIRCUITS, INSTALL KING BROS. CV SERIES CHECK VALVES IN LATERAL LINES FOR EVERY 10' OF ELEVATION CHANGE.

16. THE IRRIGATION CONTRACTOR SHALL FLUSH AND ADJUST ALL SPRINKLER HEADS FOR OPTIMUM PERFORMANCE AND TO PREVENT OVERSPRAY ONTO WALKS, ROADWAYS AND/OR BUILDINGS AS MUCH AS POSSIBLE. THIS SHALL INCLUDE SELECTING THE BEST DEGREE OF FIXED ARC (OR AN ADJUSTABLE ARC IF FIXED ARC DOES NOT MATCH THE ARC TO BE IRRIGATED) TO FIT THE SITE CONDITIONS AND TO THROTTLE THE FLOW CONTROL AT EACH VALVE TO OBTAIN THE OPTIMUM OPERATING PRESSURE FOR EACH SYSTEM. ALL MAIN LINES SHALL BE FLUSHED PRIOR TO THE INSTALLATION OF IRRIGATION HEADS. AT 30 DAYS AFTER INSTALLATION EACH SYSTEM SHALL BE FLUSHED TO ELIMINATE GLUE AND DIRT PARTICLES FROM THE LINES.

17. WHEN VERTICAL OBSTRUCTIONS (STREET LIGHTS, TREES, FIRE HYDRANTS, ETC.) INTERFERE WITH THE SPRAY PATTERN OF THE HEADS SO AS TO PREVENT PROPER COVERAGE, THE IRRIGATION CONTRACTOR SHALL FIELD ADJUST THE SPRINKLER SYSTEM BY INSTALLING A QUARTER, THIRD OR HALF CIRCLE HEAD AT THE SIDES OF THE OBSTRUCTION SO AS TO PROVIDE PROPER COVERAGE. ALL ADJUSTMENTS SHALL BE MADE AT NO ADDITIONAL COST TO THE OWNER.

18. NOTIFY ARCHITECT OF ANY ASPECTS OF LAYOUT THAT WILL PROVIDE INCOMPLETE OR INSUFFICIENT WATER COVERAGE OF PLANT MATERIAL AND DO NOT PROCEED UNTIL HIS INSTRUCTIONS ARE OBTAINED.

19. LOCATE BUBBLERS ON UPHILL SIDE OF TREES. TREE BUBBLERS ARE FOR ESTABLISHMENT AND DROUGHT CONDITIONS. THEY ARE TO BE TURNED OFF AFTER TREES ARE ESTABLISHED AND TURNED ON DURING DROUGHT CONDITIONS.

20. IN ADDITION TO THE SLEEVES AND CONDUITS SHOWN ON THE DRAWINGS, THE IRRIGATION CONTRACTOR SHALL BE RESPONSIBLE FOR COORDINATING THE INSTALLATION OF SLEEVES AND CONDUITS OF SUFFICIENT SIZE UNDER ALL PAVED AREAS.

21. ALL EXCAVATIONS ARE TO BE FILLED WITH COMPACTED BACKFILL. CONTRACTOR TO REPAIR ALL SETTLED TRENCHES PROMPTLY, FOR A PERIOD OF 1 YEAR AFTER COMPLETION OF WORK. ADDITIONALLY, CONTRACTOR SHALL WARRANT THAT THE IRRIGATION SYSTEM WILL BE FREE FROM DEFECTS IN MATERIALS AND WORKMANSHIP FOR A PERIOD OF 1 YEAR AFTER FINAL ACCEPTANCE OF WORK.

22. WHERE IT IS NECESSARY TO EXCAVATE ADJACENT TO EXISTING TREES, THE CONTRACTOR SHALL USE ALL POSSIBLE CARE TO AVOID INJURY TO TREES, AND TREE ROOTS. EXCAVATION IN AREAS WHERE 2 INCH AND LARGER ROOTS OCCUR SHALL BE DONE BY HAND. ROOTS 2 INCHES AND LARGER IN DIAMETER SHALL BE WRAPPED IN A PLASTIC BAG AND SECURED WITH A RUBBER BAND. TRENCHES ADJACENT TO TREE SHOULD BE CLOSED WITHIN 24 HOURS; WHERE THIS IS NOT POSSIBLE, THE SIDE OF THE TRENCH ADJACENT TO THE TREE SHALL BE KEPT SHADED WITH BURLAP OR CANVAS.

23. THE SPRINKLER SYSTEM DESIGN IS BASED ON THE MINIMUM OPERATING PRESSURE SHOWN ON THE IRRIGATION DRAWINGS. THE IRRIGATION CONTRACTOR SHALL VERIFY WATER PRESSURE PRIOR TO CONSTRUCTION. REPORT ANY DIFFERENCE BETWEEN THE WATER PRESSURE INDICATED ON THE DRAWINGS AND THE ACTUAL PRESSURE READING AT THE IRRIGATION POINT OF CONNECTION TO THE OWNER'S AUTHORIZED REPRESENTATIVE.

24. IRRIGATION DEMAND: 15 GPM at 65 PSI

25. OPERATE IRRIGATION CONTROLLER(S) BETWEEN THE HOURS OF 10:00 PM AND 7:00 AM.

26. IRRIGATION CONTRACTOR TO NOTIFY ALL LOCAL JURISDICTIONS FOR INSPECTION AND TESTING OF INSTALLED BACKFLOW PREVENTION DEVICE.

27. THE CONTRACTOR SHALL NOTIFY UNDERGROUND SERVICE ALERT AT 811 AT LEAST 48 HOURS PRIOR TO ANY EXCAVATION.

DRIPLINE NOTES:

1. PLANS ARE DIAGRAMMATIC. INSTALL DRIPLINE AND COMPONENTS PER MANUFACTURERS INSTRUCTIONS AND INSTALLATION DETAILS.

2. INSTALL DRIPLINE A MAXIMUM OF 18" APART WITH EMITTERS TRIANGULARLY SPACED. INSTALL 2" FROM PERIMETER OF PLANTED AREA. THERE SHOULD BE A MINIMUM OF TWO DRIPLINE LATERALS IN EACH PLANTED AREA. DRIPLINE SHALL BE INSTALLED AT A CONSISTANT DEPTH THROUGHOUT THE CIRCUIT.

3. PLACE AIR/VACUUM RELIEF VALVES AT THE HIGHEST POINTS OF EACH ZONE AND JUST BELOW CHECK VALVES ON SLOPES. INSTALL ONE AIR/VACUUM RELIEF VALVE FOR EVERY 1125' OF TOTAL DRIPLINE PER ZONE.

4. PLACE FLUSH VALVES AT THE HYDRAULIC CENTER OF THE EXHAUST HEADER OR AT LOW POINT ON SLOPES. INSTALL MINIMUM OF ONE FOR EVERY 15 GPM.

5. INSTALL IN-LINE CHECK VALVES ON SLOPES GREATER THAN 3% AND WHERE LOW-LINE DRAINAGE COULD CAUSE WET AREAS IN THE LOWEST AREAS OF AN IRRIGATION ZONE. CHECK VALVES SHALL BE PLACED EVERY 4-5 FEET BETWEEN DRIPLINE LATERALS AND BEFORE THE FLUSH VALVE.

6. ON ALL SLOPES AND MOUNDS, PLACE THE DRIPLINE LATERALS PARALLEL TO THE SLOPE CONTOUR WHERE POSSIBLE. INCREASE THE LATERAL SPACING BY 25% ON THE LOWER ONE-THIRD OF THE SLOPE TO AVOID EXCESS DRAINAGE.

7. PVC SUPPLY AND FLUSH LINE SIZING GUIDE (ALL SUPPLY AND FLUSH LINES SHALL BE THE SAME SIZE FOR THE ENTIRE ZONE):
- 0-8 GPM – 3/4"
- 8.1-15 GPM – 1"
- 15.1-25 GPM – 1 1/4"

8. FITTINGS SHALL BE OF THE SAME MANUFACTURER AS DRIPLINE.

9. STAPLE DRIPLINE TO GROUND EVERY 3 FEET. USE ADDITIONAL STAPLES OVER EACH TEE, ELBOW OR CROSS. USE U-SHAPED STAPLES TO AVOID PINCHING THE DRIPLINE.

10. THOROUGHLY FLUSH EACH INSTALLATION SEGMENT TO ENSURE NO DEBRIS CONTAMINATION OCCURS.

11. IN TURF OR NOW-MOW GRASS AREAS, A TEMPORARY OVERHEAD SPRAY SYSTEM WILL NEED TO BE PROVIDED UNTIL THE TURF SEED OR SOD IS ESTABLISHED. OVERHEAD WATERING CAN BE DISCONTINUED WHEN EDGES OF THE SOD CANNOT BE PULLED UP. RUN THE DRIPLINE SYSTEM SEVERAL TIMES DAILY IN ADDITION TO THE TEMPORARY OVERHEAD SYSTEM.

12. RUN THE DRIPLINE SYSTEM EVERY DAY OR EVERY OTHER DAY TO ESTABLISH PLANT MATERIAL. MAINTAIN A CONSISTENT MOISTURE BALANCE IN THE SOIL. IT IS IMPORTANT TO KEEP THE SOIL MOIST WITHOUT SATURATION.

IRRIGATION LEGEND

SYMBOL	MODEL NUMBER	DESCRIPTION	PSI	FLOW RATE (GPM)	MAX. RADIUS	MAX. SPACING	DETAIL #
▽	PROS-06-PR40/MP-3000-BLUE-180	HUNTER ROTATOR 6" POP-UP LAWN SPRAY-180 DEGREES	40	1.82	30'	22'	1-3/11
◥	PROS-06-PR40/MP-3000-BLUE-90	HUNTER ROTATOR 6" POP-UP LAWN SPRAY-90 DEGREES	40	.86	30'	22'	1-3/11
⊖	PROS-06-PR40/MP-2000-BLACK-180	HUNTER ROTATOR 6" POP-UP LAWN SPRAY-180 DEGREES	40	.74	19'	14'	1-3/11
⊕	PROS-06-PR40/MP-2000-BLACK-90	HUNTER ROTATOR 6" POP-UP LAWN SPRAY-90 DEGREES	40	.40	19'	14'	1-3/11
●	LF40-PC	TORO PRESSURE COMPENSATING DRIP BUBBLER INSTALL ONE BUBBLER PER SHRUB	25	4 GPH	-	-	1-4/13
■	RWS-B-C-1402	RAIN BIRD ROOT WATERING SYSTEM INSTALL ONE BUBBLER PER TREE	40	.5 GPM	-	-	1-3/12
▲	RWS-M-B-C-1402	RAIN BIRD ROOT WATERING SYSTEM INSTALL ONE BUBBLER PER TREE	40	.5 GPM	-	-	1/3/12
△	T-FCH-H-FIPT	TORO DL2000 FLUSH VALVE					1-4/16
NOT SHOWN	T-YD-500-34	TORO DL2000 AIR VENT					1-4/18
◘	T-DL-MP9	TORO DL2000 POP-UP OPERATION INDICATOR					1-4/19
◔	700-OMR-100 SERIES/LT-T SERIES	IRRITROL REMOTE CONTROL VALVE WITH PRESSURE REGULATION / KBI PVC BALL VALVE					1-3/4
◪	DZK-700-1-LF / LT-1000-T	TORO DRIP ZONE VALVE KIT - INCL. REMOTE CONTROL VALVE, WYE FILTER WITH 150 MESH SCREEN, AND PRESET PRESSURE REGULATOR / KBI SCH 80 PVC BALL VALVE					1-3/5
●+	B-401-VBH	CHAMPION HOSE BIB WITH HOSE VACUUM BREAKER					1-3/10
⋈	T-113-LF	NIBCO LEAD FREE GATE VALVE (LINE SIZE)					1-3/6
⊠	FSI-T10-000	CST 1" FLOW SENSOR					1-3/3
⋇	SXL-1"	WILKINS 1" WYE FILTER WITH 20 MESH SCREEN					1-4/14
⊞	2160-1"	GRISWOLD 1" MASTER CONTROL VALVE (NORMALLY OPEN)					1-3/2
R	CL-100-WIRELESS	IRRITROL CLIMATE LOGIC WIRELESS WEATHER SENSOR					1-4/15
C	MC-24E PROMAX-UA	IRRITROL 24 STATION MC-E CONTROLLER - WALL MOUNT PRO MAX UNIVERSAL MAINTENANCE REMOTE KIT					1-3/1
C - 1		CONTROLLER AND STATION NUMBER					
1.6		APPLICATION RATE (INCHES)					
1" | 15		OPERATING PRESSURE (PSI) OR AIR RELIEF VALVE QUANTITY					
25		APPROXIMATE GALLONS PER MINUTE					
1"		REMOTE CONTROL VALVE SIZE					
———		MAIN LINE: 1120-SCHEDULE 40 PVC SOLVENT WELD PLASTIC PIPE WITH SCHEDULE 80 AND SCHEDULE 40 PVC SOLVENT WELD FITTINGS. 18" COVER.					1-3/8
———		LATERAL LINE: 1120-CLASS 200 PSI PVC SOLVENT WELD PIPE WITH SCHEDULE 40 PVC SOLVENT WELD FITTINGS. 12" COVER.					1-3/8
- - - -		SUB-SURFACE DRIPLINE: TORO DL2000 RGP-212-10 DRIPLINE WITH ROOT GUARD. USE ONLY DL2000 DRIPLINE TRI-LOC FITTINGS. 2" COVER. (12" EMITTER SPACING; .53 GPH PER EMITTER)					1-4/17
- - - -		SLEEVE (SL): 1120-CLASS 200 PVC PLASTIC PIPE. 24" COVER.					1-3/8

BROOKWATER
IRRIGATION CONSULTANTS
480 ST. JOHN STREET, SUITE 220
PLEASANTON, CALIFORNIA 94566
TEL 925.855.0417 FAX 925.855.0357
E-MAIL ANN@BROOKWATER.COM

Stamp

LICENSED LANDSCAPE ARCHITECT
Christopher Yates 4553
Signature
Renewal Date
Date
STATE OF CALIFORNIA

1265 Indiana Street
San Francisco Ca. 94107
P. 415.926.5775
C. 415.271.1899
www.fieldarch.com

JANET S. LUEHRS
Certified Irrigation Designer
CID
IRRIGATION ASSOCIATION
43274

PANGAN RESIDENCE
AUGUST COURT
MILPITAS, CA 95035

Revisions:

IRRIGATION LEGEND AND NOTES

SCALE : 1/16" = 1'-0"

DATE : 5/4/2018

SHEET : **I-2**

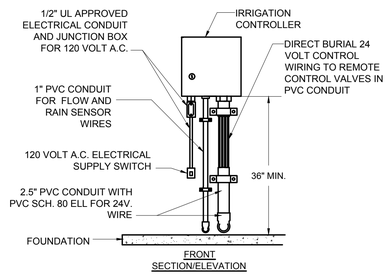

1 INSIDE WALL MOUNT CONTROLLER DETAIL

NOT TO SCALE

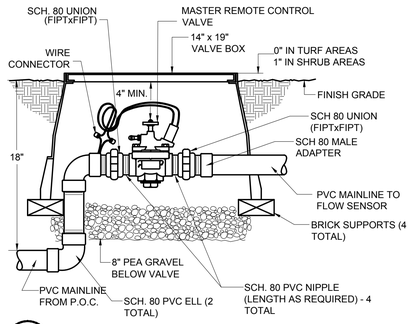

2 MASTER REMOTE CONTROL VALVE

NOT TO SCALE

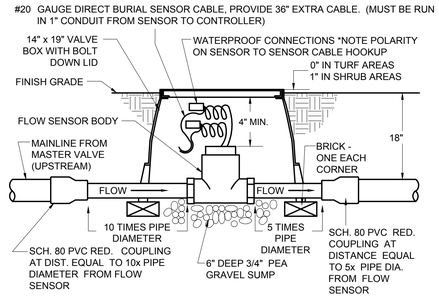

NOTE: FLOW SENSOR MUST BE INSTALLED WITH INSERT (TOP) VERTICAL AND BODY (TEE) POSITIONED HORIZONTALLY.

3 FLOW SENSOR INSTALLATION DETAIL

NOT TO SCALE

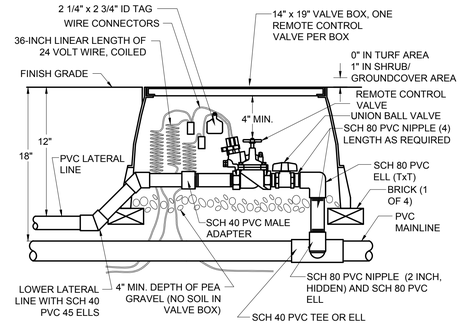

4 REMOTE CONTROL VALVE & BALL VALVE

NOT TO SCALE

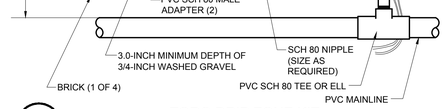

5 TORO DRIP ZONE KIT

NOT TO SCALE

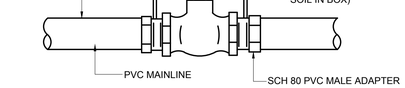

6 GATE VALVE DETAIL - 2" & SMALLER

NOT TO SCALE

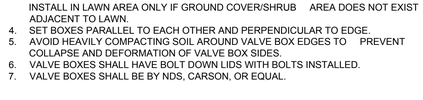

NOTES:
1. CENTER BOX OVER VALVE TO FACILITATE SERVICING VALVE.
2. SET BOXES 1" ABOVE FINISH GRADE OR MULCH COVER IN GROUND COVER/SHRUB AREA AND FLUSH WITH FINISH GRADE IN TURF AREA.
3. SET VALVE BOX ASSEMBLY IN GROUND COVER/SHRUB AREA WHERE POSSIBLE. INSTALL IN LAWN AREA ONLY IF GROUND COVER/SHRUB AREA DOES NOT EXIST ADJACENT TO LAWN.
4. SET BOXES PARALLEL TO EACH OTHER AND PERPENDICULAR TO EDGE.
5. AVOID HEAVILY COMPACTING SOIL AROUND VALVE BOX EDGES TO PREVENT COLLAPSE AND DEFORMATION OF VALVE BOX SIDES.
6. VALVE BOXES SHALL HAVE BOLT DOWN LIDS WITH BOLTS INSTALLED.
7. VALVE BOXES SHALL BE BY NDS, CARSON, OR EQUAL.

7 VALVE BOX INSTALLATION DETAIL

NOT TO SCALE

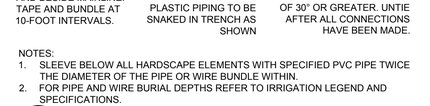

NOTES:
1. SLEEVE BELOW ALL HARDSCAPE ELEMENTS WITH SPECIFIED PVC PIPE TWICE THE DIAMETER OF THE PIPE OR WIRE BUNDLE WITHIN.
2. FOR PIPE AND WIRE BURIAL DEPTHS REFER TO IRRIGATION LEGEND AND SPECIFICATIONS.

8 PIPE AND WIRE TRENCHING

NOT TO SCALE

STEP 1: STRIP WIRES 1/2" FROM ENDS.

STEP 2: APPLY SCOTCHLOK Y SPRING CONNECTOR IN A CLOCKWISE DIRECTION.

STEP 3: INSERT SPLICE TO BOTTOM OF GEL-FILLED TUBE. CHECK TO MAKE SURE CONNECTOR HAS BEEN PUSHED PAST LOCKING FINGERS AND IS SEATED AT BOTTOM OF TUBE.

STEP 4: POSITION WIRES IN WIRE CHANNELS AND CLOSE INSULATOR TUBE COVER.

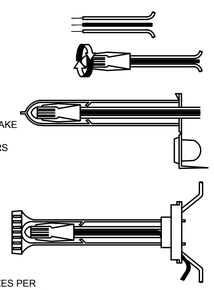

NOTE: MAXIMUM WIRE SIZES PER CONNECTOR ARE THREE # 14'S OR TWO #12'S.

9 WIRE CONNECTION DETAIL

NOT TO SCALE

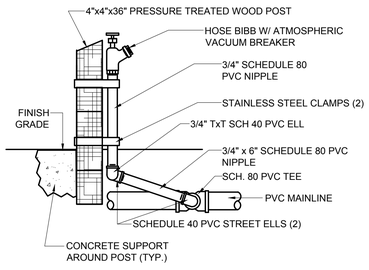

10 HOSE BIBB DETAIL

NOT TO SCALE

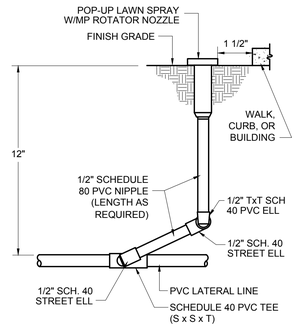

NOTE:
PRE-FABRICATED SWING JOINTS MAY BE USED. SWING JOINTS SHALL BE BY LASCO, RAINBIRD, OR EQUAL

11 LAWN POP-UP INSTALLATION DETAIL

NOT TO SCALE

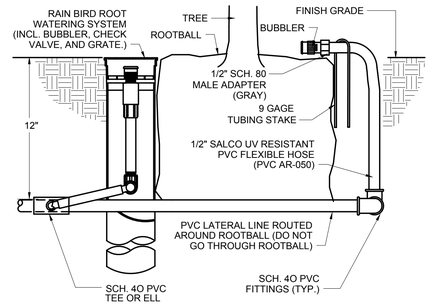

12 TREE BUBBLER DETAIL

NOT TO SCALE

BROOKWATER
IRRIGATION CONSULTANTS
480 ST. JOHN STREET, SUITE 220
PLEASANTON, CALIFORNIA 94566
TEL 925.855.0417 FAX 925.855.0857
E-MAIL ANN@BROOKWATER.COM

Stamp

LICENSED LANDSCAPE ARCHITECT
Christopher Yates 4933
Signature
Renewal Date
Date
STATE OF CALIFORNIA

1265 Indiana Street
San Francisco Ca. 94107
P. 415.926.5775
C. 415.271.1899
www.fieldarch.com

JANET S. LUEHRS
Certified Irrigation Designer
CID
43274

PANGAN RESIDENCE
AUGUST COURT
MILPITAS, CA 95035

Revisions:

IRRIGATION DETAILS-1

SCALE : 1/16" = 1'-0"

DATE : 5/4/2018

SHEET : I-3

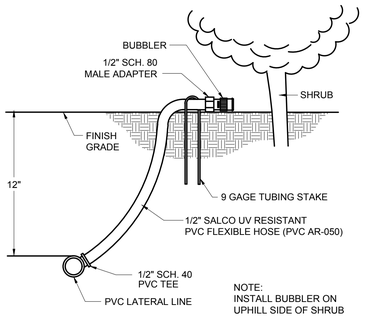

13 SHRUB BUBBLER ON FLEX HOSE DETAIL

NOT TO SCALE

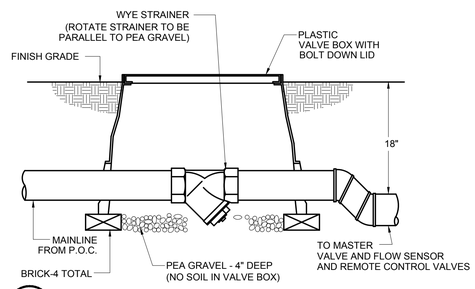

14 WYE STRAINER

NOT TO SCALE

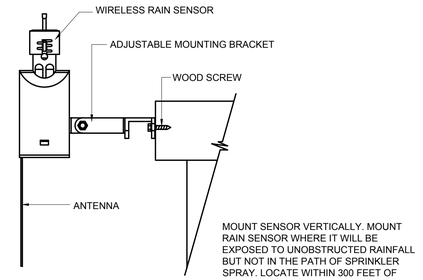

15 WIRELESS RAIN SENSOR INSTALLATION DETAIL

NOT TO SCALE

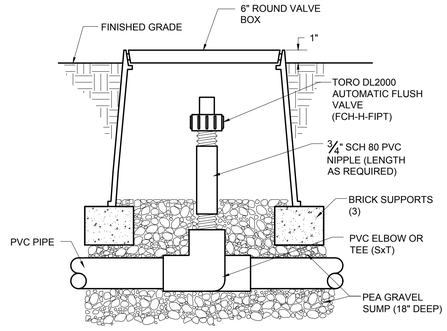

16 TORO DL2000 AUTOMATIC FLUSH VALVE - PLUMBED TO PVC

NOT TO SCALE

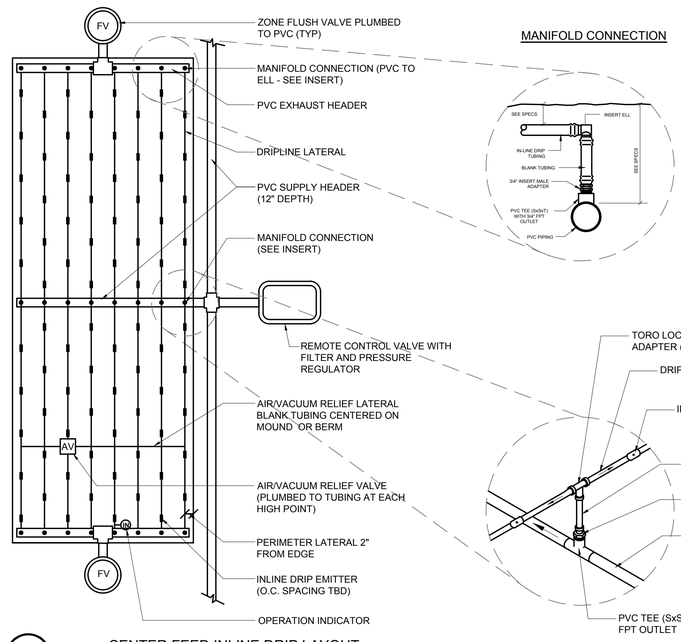

17 CENTER FEED INLINE DRIP LAYOUT

NOT TO SCALE

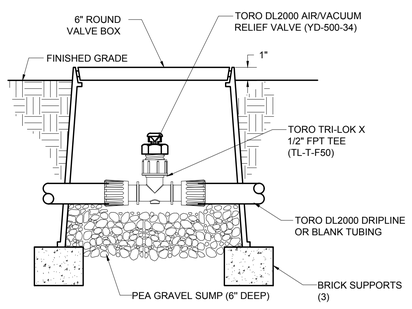

NOTE:
AIR/VACUUM RELIEF VALVE CANNOT BE CONNECTED LOWER
THAN DRIPLINE LATERALS.

18 TORO DL2000 AIR/VACUUM RELIEF VALVE - PLUMBED TO TUBING

NOT TO SCALE

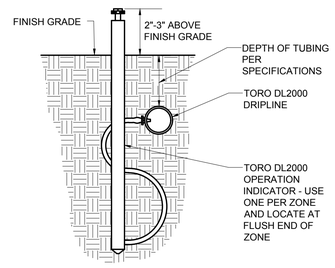

19 TORO DL2000 OPERATION INDICATOR

NOT TO SCALE

Stamp

LICENSED LANDSCAPE ARCHITECT
Christopher Yates 4815
Signature
Renewal Date
Date
STATE OF CALIFORNIA

1265 Indiana Street
San Francisco Ca. 94107
P. 415.926.5775
C. 415.271.1899
www.fieldarch.com

JANET S. LUEHRS
Certified Irrigation Designer
CID
43274

PANGAN RESIDENCE

AUGUST COURT
MILPITAS, CA 95035

Revisions:

IRRIGATION DETAILS-2

SCALE : 1/16" = 1'-0"

DATE : 5/4/2018

SHEET : I-4

BROOKWATER
IRRIGATION CONSULTANTS
480 ST. JOHN STREET, SUITE 220
PLEASANTON, CALIFORNIA 94566
TEL 925.855.0417 FAX 925.855.0357
E-MAIL ANN@BROOKWATER.COM

Pangan Residence

HYDROZONE SUMMARY

*Hydrozone Description	Total Sq. Ft.	% of Landscape
Cool Season Turf (CST)	0	0.0%
Warm Season Turf (WST)	0	0.0%
High Water Use Plants (HW)	0	0.0%
Bioretention Plants (BR)	0	0.0%
Medium Water Use Plants (MW)	3,768	37.8%
Low Water Use Plants (LW)	6,196	62.2%
Very Low Water Use Plants (VLW)	0	0.0%
Water Feature	0	0.0%
Special Landscape Area (SLA)	0	0.0%
TOTAL	9,964	100.0%

**Irrigation Method	Total Sq. Ft.	% of Landscape
Rotor (FC-R, PC-R)	0	0.0%
Multi-Stream Rotator (MR)	2,134	21.4%
Spray (S)	0	0.0%
Bubbler (B)	403	4.0%
Drip (D)	197	2.0%
In-Line Drip (DL)	7,230	72.6%
Micro Spray (MS)	0	0.0%
Other (O)	0	0.0%
	9,964	

CITY OF
Milpitas
LANDSCAPE WATER USE STATEMENT

PROJECT NAME: **Pangan Residence**
PROJECT ADDRESS: August Court, Milpitas, CA 95035

PREPARED BY: JANET LUEHRS (CID, CLIA #43274)
BROOKWATER INC., IRRIGATION CONSULTANTS
480 SAINT JOHN STREET, SUITE 220
PLEASANTON, CA 94566
925-855-0417
925-855-0357 (FAX)
Janet@Brookwater.com (e-mail)
Ann@brookwater.com (e-mail)

"I have complied with the criteria of the ordinance and applied them accordingly for the efficient use of water in the irrigation design plan."

Signed: Janet Luehrs

PART ONE **MAXIMUM APPLIED WATER ALLOWANCE (MAWA)**

MAWA = ETo x .62 x [(ETAFx HA) + ((1-ETAF) x SLA)]

YEARLY ETo	45.3
CONVERSION FACTOR	0.62
ETAF	0.55
TOTAL IRRIGATED LANDSCAPE AREA (HA)	9,964 SQUARE FEET
SPECIAL LANDSCAPE AREA (SLA)	0 SQUARE FEET
LANDSCAPE WATER ALLOWANCE	**153,917 GALLONS PER YEAR**
TOTAL ACRE FEET	0.47 ACRE FEET

PART TWO **ESTIMATED TOTAL WATER USE (ETWU)**

(AVERAGE *ETAF* AND *ETWU* FROM WATER EFFICIENT LANDSCAPE WORKSHEET)

AVERAGE ETAF FOR REGULAR LANDSCAPE AREAS (TOTAL ETAF x AREA / TOTAL AREA)	0.47
ETWU FOR REGULAR LANDSCAPE AREAS	**132,738 GALLONS PER YEAR**
SITE WIDE ETAF	0.47
ETWU FOR ALL LANDSCAPE AREAS	**132,738 GALLONS PER YEAR**
TOTAL ACRE FEET	0.41 ACRE FEET

Pangan Residence
WATER EFFICIENT LANDSCAPE WORKSHEET

Reference Evapotranspiration (Eto) **45.3**

ZONE NO.	PLANT TYPE	HYDROZONE* (PLANT WATER USE)	PLANT FACTOR (PF)	AVG LANDSCAPE COEFFICIENT	IRRIGATION METHOD**	IRRIGATION EFFICIENCY (IE)	ETAF (PF/IE)	HYDROZONE AREA (HA) (Sq Ft)	ETAF x HA	ESTIMATED TOTAL WATER USE (ETWU)	% LANDSCAPE AREA
REGULAR LANDSCAPE AREA											
C-1	TURF	MW	0.50	0.50	DL	0.81	0.62	1,135	701	19,678	11.4%
C-2	TREE	MW	0.50	0.50	B	0.81	0.62	101	62	1,751	1.0%
C-3	TURF	MW	0.50	0.50	MR	0.75	0.67	375	250	7,022	3.8%
C-4	TURF	MW	0.50	0.50	MR	0.75	0.67	1,759	1,173	32,936	17.7%
C-5	TREE	MW	0.50	0.50	B	0.81	0.62	151	93	2,618	1.5%
C-6	TREE	LW	0.30	0.30	B	0.81	0.37	101	37	1,051	1.0%
C-7	TURF	LW	0.30	0.30	DL	0.81	0.37	1,202	445	12,503	12.1%
C-8	SHRUB	LW	0.30	0.30	DL	0.81	0.37	480	178	4,993	4.8%
C-9	TURF	LW	0.30	0.30	DL	0.81	0.37	2,379	881	24,747	23.9%
C-10	SHRUB	MW	0.50	0.50	D	0.81	0.62	197	122	3,415	2.0%
C-11	TURF	LW	0.30	0.30	DL	0.81	0.37	2,034	753	21,158	20.4%
C-12	TREE	MW	0.50	0.50	B	0.81	0.62	50	31	867	0.5%
TOTALS (REGULAR LANDSCAPE AREAS)								**9,964**	**4,726**	**132,738**	**100.0%**
SPECIAL LANDSCAPE AREA											
	0				0		1.00	0	0	0	0.0%
TOTALS (SPECIAL LANDSCAPE AREAS)								**0**	**0**	**0**	**0.0%**
TOTALS FOR ALL AREAS								***9,964***	***4,726***	***132,738***	***100%***

BROOKWATER
IRRIGATION CONSULTANTS
480 ST. JOHN STREET, SUITE 220
PLEASANTON, CALIFORNIA 94566
TEL 925.855.0417 FAX 925.855.0357
E-MAIL ANN@BROOKWATER.COM

Stamp

LICENSED LANDSCAPE ARCHITECT
Christopher Yates #6453
Signature
Renewal Date
Date
STATE OF CALIFORNIA

1265 Indiana Street
San Francisco Ca. 94107
P. 415.926.5775
C. 415.271.1899
www.fieldarch.com

JANET S. LUEHRS
Certified Irrigation Designer
CID
43274

PANGAN RESIDENCE
AUGUST COURT
MILPITAS, CA 95035

Revisions:

IRRIGATION WATER CALCULATIONS

SCALE : 1/16" = 1'-0"

DATE : 5/4/2018

SHEET : **I-6**

PLANT LIST

TREES

QTY.	SIZE	BOTANICAL NAME
12	24" BOX	CARPINUS BETULUS FASTIGIATA
8	24" BOX	CERCIDIUM 'DESERT MUSEUM'
8	15 GAL	FRUIT TREES
8	24" BOX	ZELKOVA SERRATA MUSHASHINO

SHRUBS/VINES

QTY.	SIZE	BOTANICAL NAME
8	15 GAL	ELEGIA CAPENSIS

GRASSES/GROUNDCOVERS

QTY.	SIZE	BOTANICAL NAME
3100 SF	SOD	NATIVE BENTGRASS
4000 SF	SOD	NO MOW FESCUE

VICINITY MAP

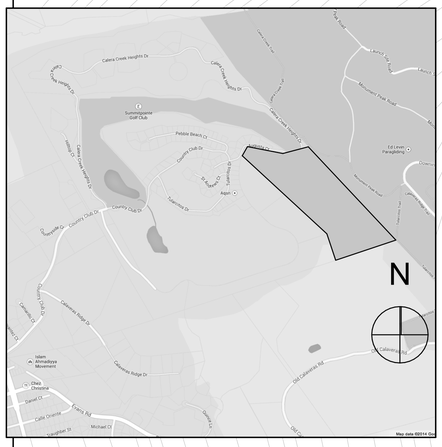

PROPOSED FLOOR AREA

LOT SIZE:	38.77 ACRES
ZONING DISTRICT:	HS-d2 (100%)
(N) TWO-STORY RESIDENCE:	5,263.9 SQ. FT.
(N) DECKS/TERRACE	2,369.5 SQ. FT.
(N) DRIVEWAY	36,564 SQ. FT.
MAX. SQUARE FEET (≥10 ACRES):	8,000 SQ. FT.

GRADING QUANTITIES (CUBIC YDS)

DRIVEWAY	2289	3061
RESIDENCE	320	0
BASEMENT	756	0
BUILDING SITE & TURNAROUND	2300	140
TOTAL	5664	3201

SEE CIVIL DRAWINGS FOR MORE DETAILS

SS — SANITARY SEWER LINE (1)
CW — WATER LINE
G — GAS LINE

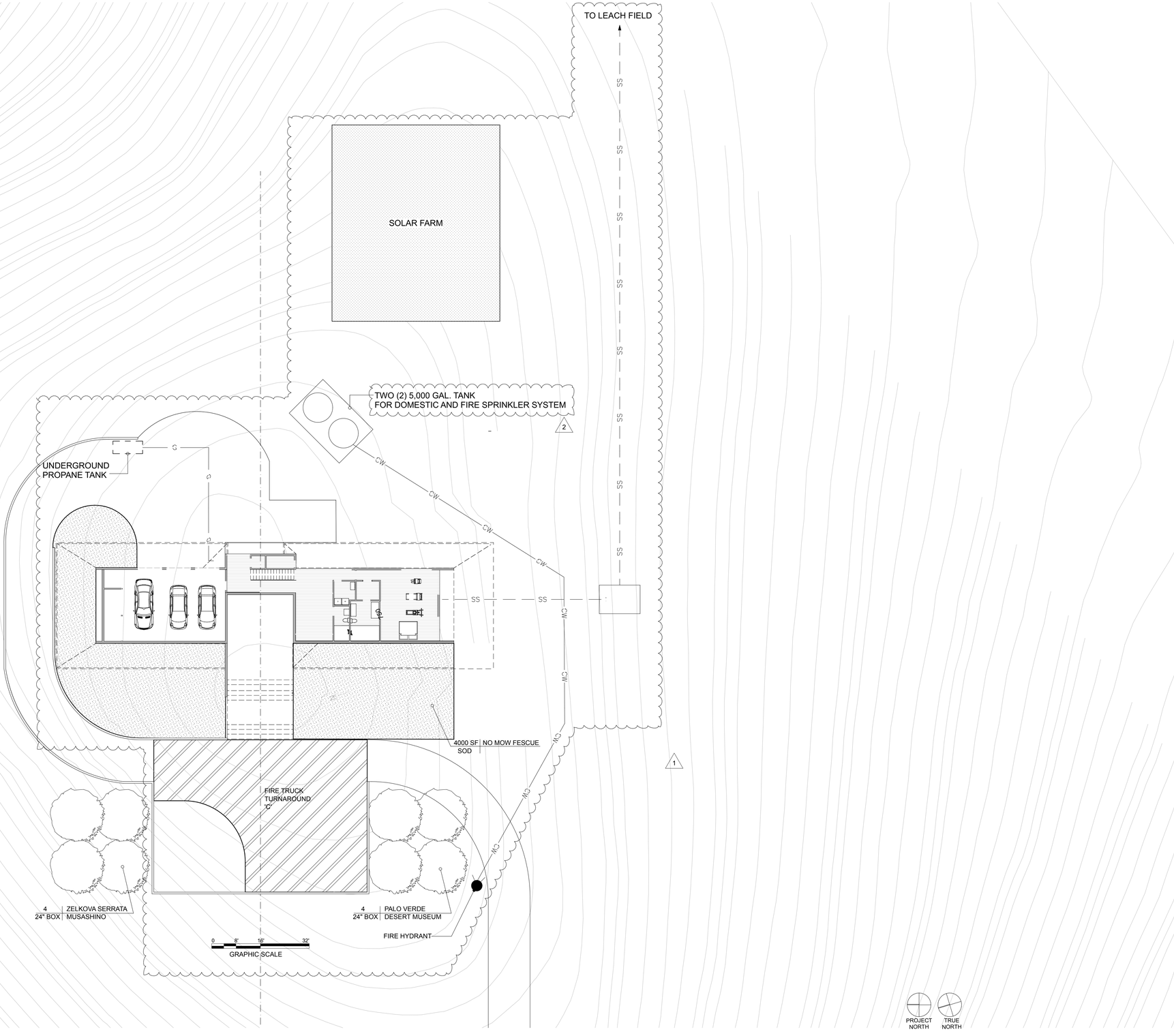

1 L1 LANDSCAPE PLAN
SCALE: 1/16" = 1'-0"

N

FIELD LAND SCAPE
1265 Indiana Street
San Francisco Ca. 94107
P. 415.926.5775
C. 415.271.1899
www.fieldarch.com

LICENSED LANDSCAPE ARCHITECT
Christopher Yates 4833
Signature
10.1.2021
Renewal Date
10.12.2020
Date
STATE OF CALIFORNIA

PANGAN RESIDENCE
AUGUST COURT
MILPITAS, CA 95035

Revisions:
1 NOV 29, 2018
2 OCT 12, 2020

LANDSCAPE PLAN

SCALE : 1/16" = 1'-0"
DATE : 5/4/2018
SHEET : **L1**

FILE PATH: /Users/moderndesigncn/Dropbox/000 ARCHICAD FILES/Pangan Arch/CAD/PANGEN_BUILDING_Comments2_10062020.pln • LAST SAVED BY: Modern House - Natsumi • PRINTED ON 4/27/21 @ 3:27 PM
PROJECT COMPANY • PANGAN RESIDENCE • *** PROJECT NUMBER *** • A0.1

A4.404.2 (2) Dimensions and layouts. Building dimensions and layouts are designed to minimize waster by one or more of the following measures in at least 80 percent of the structure:

1. Building design dimensions in 2-foot increments are used
2. Windows and doors are located at regular 16" and 24" stud positions
3. Other methods acceptable to the enforcing agency.

A4.405.3 Recycled content. Use materials, equivalent in performance to virgin materials, with postconsumer or preconsumer recycled content value (RCV) for a minimum of 10 percent of the total value, based on estimated cost of materials on the project. Provide documentation as to the respective values. (Tier 1. Not less than a 10 percent recycled content value.)

A4.405.1 Prefinished building materials. Utilize refinished building materials which do not require additional painting or staining when possible. One or more of the following building materials that do not require additional resources for finishing are used:

1. Exterior trim no requiring paint or stain.
2. Windows not requiring paint or stain.
3. Siding or exterior wall coverings which do no require paint of stain

A4.407.2 Roof Drainage. Install gutter and downspout systems to route water at least 5 feet away from the foundation or connect to landscape drains which discharge to a dry well, sump bioswale, rainwater capture system.

A4.407.4 Material Protection. Protect building materials delivered to the construction site from rain and other sources of moisture.

A4.407.6 Roof Overhangs. A permanent overhang or awning at least two feet in depth is provided at all exterior walls.

A4.504.2 Resilient flooring systems. Resilient flooring systems installed in the building shall meet the percentages specified in this section and comply with the VOC-emission limits defined in the Collaborative for High Performance Schools (CHPS) Low-emitting Materials List or certified under the Resilient Floor Covering Institute (RFCI) FloorScore program. (Tier 1. At least 90 percent of the total area of resilient flooring installed shall comply.)

A4.506.3 Direct-vent Appliances. Direct-vent heating and cooling equipment shall be utilized if the equipment will be located in the conditioned space or install the space heating and water heating equipment in an isolated mechanical room.

4.408.1 Construction waste management. Recycle and/or salvage for reuse a minimum of 65 percent of the nonhazardous contraction and demolition waster in accordance with either Section 4.408.2, 4.408.3, or 4.408.4, or meet a more stringent local construction and demolition waster management ordinance.

Exceptions:
1. Excavated soils and land-clearing debris
2. Alternate waster reduction methods developed by working with local agencies if diversion or recycle facilities capable of compliance with this item do not exist or are not located reasonably close to the job site.
3. The enforcing agency may make exceptions to the requirements of this section when isolated jobsites are located in areas beyond the haul boundaries of the diversion facility.

THESE DRAWINGS ARE THE ORIGINAL UNPUBLISHED WORK OF THE ARCHITECT AND MAY NOT BE USED OR PUBLISHED WITHOUT THE WRITTEN PERMISSION OF THE ARCHITECT.
© CURTIS CLINE
MODERN HOUSE

RESIDENTIAL MANDATORY MEASURES
EFFECTIVE JANUARY 1, 2017
2016 CALGREEN CODE

SECTION	REQUIREMENTS
	Special inspection
702.2	Special inspectors must be qualified and able to demonstrate competence to the enforcing agency in the discipline in which they are inspecting.
	Documentation
703.1	Documentation of compliance shall include, but is not limited to, construction documents, plans, specifications, builder or installer certification, inspection reports, or other methods acceptable to the local enforcing agency. Other specific documentation or special inspections necessary to verify compliance are specified in appropriate sections of CALGreen.

TIER 1 REQUIREMENTS

A4.106.2.3 Topsoil protection. Topsoil shall be protected or saved for reuse as specified in this section. (Tier 1. Displaced topsoil shall be stockpiled for reuse in a designated area and covered or protected from erosion.)

A4.106.4 Water permeable surfaces. Permeable paving is utilized for the parking, walking or patio surfaces in compliance with the following. (Tier 1. Not less than 20 percent of the total parking, walking or patio surfaces shall be permeable.)

A4.106.5 Cool roof. Roofing materials for Tier 1 and Tier 2 buildings shall comply with this section:

Exception: Install roof constructions that have a thermal mass over the roof membrane with a weight of at least 25 lb/sf.

TABLE A4.106.5(1) TIER 1

ROOF SLOPE	ROOF WEIGHT	CLIMATE ZONE	Minimum 3-year Aged Solar Reflectance	Thermal Emittance	SRI
≤ 2 : 12	N/A	13 & 15	0.55	0.75	64
> 2 : 12	< 5 lb/ft2	10-15	0.20	0.75	16
≥ 5 lb/ft2	1-16	0.15	0.75	10	

A4.106.7 Reduction of heat island effect for nonroof areas. Reduce nonroof heat islands for 50 percent of sidewalks, patios, driveways or other paved areas by using one or more of the methods listed.

1. Trees or other plantings to provide shade and that mature within 15 years of planting. Trees should be native or adaptive to the region and climate zones and noninvasive; hardy and resistant to drought, insects and disease; easy to maintain (no frequent shedding of twigs, branches, unwanted fruit or seed pods); and suitable in mature size and environmental requirements for the site. Tree selection and placement should consider location and size of areas to be shaded, location of utilities, views from the structure, distance to sidewalks and foundations, overhangs onto adjacent properties and streets; other infrastructure and adjacent to landscaping. In addition, shading shall not cast a shadow, as specified, on any neighboring solar collectors pursuant to Public Resources Code Section 25981, et seq. (Solar Shade Control Act).
2. Use high albedo materials with an initial solar reflectance value of at least 0.30 as determined in accordance with American Society for Testing and Materials (ASTM) Standards E1918 or C1549.
3. Use open grid pavement system or pervious or permeable pavement system.
4. Locate 50 percent of parking underground or use multilevel parking.
5 .Other methods of reducing heat island effects acceptable to the enforcing agency.

Note: Local agencies may have ordinances requiring mitigation of heat island effects through building or parking lot shading, tree plantings, landscaping, use of pervious pavements and other approved methods.

A4.106.8 Electric vehicle (EV) charging for new construction. New construction shall comply with Sections A4.106.8.1 and A4.106.8.2 to facilitate future installation and use of electric vehicle chargers. Electric vehicle supply equipment (EVSE) shall be installed in accordance with the California Electrical Code, Article 625.

A4.106.8.1 New one- and two-family dwellings and townhouse with attached private garages. Tier 1 and Tier 2. For each dwelling unit, a dedicated 208/240-volt branch circuit shall be installed in the raceway required by Section 4.106.4.1. The branch circuit and associated overcorrect protective device shall be rated at 40 amperes minimum. Other electrical components, including a receptacle or blank cover, related to this section shall be installed in accordance with the California Electrical Code.

A4.106.8.1.1 Identification. The service panel or sub-panel circuit directory shall identify the overcorrect protective device designated for future EV charging purposes as "EV READY" in accordance with the California Electrical Code. The receptacle or bank cover shall be identified as "EV READY."

A4.303.1 Kitchen Faucets Kitchen faucets installed in residential buildings shall not Exceed 1.5 gallons per minute at 60 psi. Requirements shall be indicated on the plumbing fixture schedule. Kitchen faucets may temporarily increase the flow above the maximum flow rate of 2.2 gallons per minute at 60 psi, and must default to a maximum flow rate of 1.5 gallons per minute at 60 psi.

A4.303.3 Appliances Water saving dishwasher appliances will be used on the project. Install a minimum of one qualified ENERGY STAR appliance with maximum water use as follows: 1. Standard Dishwashers – 4.25 gallons per cycle. 2. Compact dishwasher – 3.5 gallons per cycle. 3. Clothes washers – water factor of 6 gallons per cubic feet of drum capacity.

A4.303.5 Hot water recirculation systems. One- and two-family dwellings shall be equipped with a demand hot water recirculation system, as defined in Chapter 2. The demand hot water recirculation system shall be installed in accordance with the California Plumbing Code, California Energy Code, and the manufacturer's installation instructions.

A4.304.3 Water budget. When landscaping is provided by the builder, a water budget shall be developed for landscape irrigation use that conforms to the local water efficient landscape ordinance or to the California Department of Water Resources Model Water Efficient Landscape Ordinance where no local ordinance is applicable.

A4.304.4 Potable water reduction. When landscaping is provided by the builder, a water efficient landscape irrigation system shall be installed that reduces potable water use. The potable water use reduction shall be calculated beyond the initial requirements for plant installation and establishment. Calculations for the reduction shall be based on the water budget developed pursuant to Section A4.304.3. (Tier 1. Reduce the use of potable water to a quantity that does not exceed 65 percent of ETo times the landscape area.)

A4.304.6 Irrigation Metering Device. Section A4.304.4 is adopted as a Tier 1 and Tier 2 prerequisite and is amended to read:
A4.304.2.1 Irrigation Metering Device. Dedicated irrigation meters are to be installed in all new construction and rehabilitated landscapes when the landscape is greater than 1,000 square feet.

A4.403.2 Reduction in Cement Use As approved by the structural engineer, cement used in foundation mixed design shall be reduced as follows: Tier 1: Not less than a 20 percent reduction in cement use. Note: Products commonly used to replace cement in concrete mix designs include but are not limited to: 1. Fly ash; 2. Slag; 3. Silica Fume; 4. Rice hull ash

1

RESIDENTIAL MANDATORY MEASURES
EFFECTIVE JANUARY 1, 2017
2016 CALGREEN CODE

SECTION	REQUIREMENTS
	Aerosol paints and coatings
4.504.2.3	Aerosol paints and coatings shall meet the Product-Weighted MIR Limits for ROC in Section 94522(a)(2) and other requirements, including prohibitions on use of certain toxic compounds and ozone depleting substances, in Section 94522(e)(1) and (f)(1) of the CCR, Title 17, commencing with Section 94520; and in areas under the jurisdiction of the Bay Area Air Quality Management District shall additionally comply with the percent VOC by weight of product limits of Regulation 8, Rule 49.
	Carpet systems
4.504.3	Carpet installed in the building interior shall meet the testing and product requirements of 1 of the following: 1. Carpet and Rug Institute's Green Label Plus Program 2. California Department of Public Health, "Standard Method for the Testing and Evaluation of Volatile Organic Chemical Emissions from Indoor Sources Using Environmental Chambers," Version 1.1, February 2010 (also known as Specification 01350) 3. NSF/ANSI 140 at the Gold level 4. Scientific Certifications Systems Indoor Advantage™ Gold
	Carpet cushion
4.504.3.1	Carpet cushion installed in the building interior shall meet the requirements of the Carpet and Rug Institute's Green Label Plus Program.
	Carpet adhesive
4.504.3.2	Carpet adhesives shall meet the requirements of Table 4.504.1.
	Resilient flooring systems
4.504.4	Where resilient flooring is installed, at least 80% of floor area receiving resilient flooring shall comply with one or more of the following: 1. Products compliant with the California Department of Public Health, "Standard Method for the Testing and Evaluation of Volatile Organic Chemical Emissions from Indoor Sources Using Environmental Chambers," Version 1.1, February 2010 (also known as Specification 01350), certified as a CHPS Low-Emitting Material in the Collaborative for High Performance Schools (CHPS) High Performance Products Database 2. Products certified under UL GREENGUARD Gold (formerly the Greenguard Children & Schools Program) 3. Certification under the Resilient Floor Covering Institute (RFCI) FloorScore program 4. Meet the California Department of Public Health, "Standard Method for the Testing and Evaluation of Volatile Organic Chemical Emissions from Indoor Sources Using Environmental Chambers," Version 1.1, February 2010 (also known as Specification 01350)
	Composite wood products
4.504.5	• Hardwood plywood, particleboard and medium density fiberboard composite wood products used on the interior or exterior of the building shall meet the requirements

HCD SHL 605 (Rev. 4/16) Page 7 of 10

RESIDENTIAL MANDATORY MEASURES
EFFECTIVE JANUARY 1, 2017
2016 CALGREEN CODE

SECTION	REQUIREMENTS
4.504.5 continued	for formaldehyde as specified in the Air Resources Board's Air Toxics Control Measure for Composite Wood (17 CCR 93120 et. seq.), as shown in Table 4.504.5. Documentation is required per Section 4.504.5.1. • Definition of Composite Wood Products: Composite wood products include hardwood plywood, particleboard, and medium density fiberboard. "Composite wood products" do not include hardboard, structural plywood, structural panels, structural composite lumber, oriented strand board, glued laminated timber, prefabricated wood I-joists, or finger-joined lumber, all as specified in CCR, Title 17, Section 93120.1(a).
	Documentation
4.504.5.1	Verification of compliance shall be provided as requested by the enforcing agency, and as required in Section 4.504.5.1.
Division 4.5 – ENVIRONMENTAL QUALITY (INTERIOR MOISTURE CONTROL)	
	Concrete slab foundations
4.505.2	Concrete slab foundations or concrete slab-on-ground floors required to have a vapor retarder by the California Building Code, Chapter 19, or the California Residential Code, Chapter 5, respectively, shall also comply with this section.
	Capillary break
4.505.2.1	A capillary break shall be installed in compliance with at least 1 of the following: 1. A 4-inch thick base of 1/2-inch or larger clean aggregate shall be provided with a vapor retarder in direct contact with concrete and a concrete mix design which will address bleeding, shrinkage and curling shall be used. For additional information, see American Concrete Institute, ACI 302.2R-06. 2. Other equivalent methods approved by the enforcing agency. 3. A slab design specified by a licensed design professional.
	Moisture content of building materials
4.505.3	Building materials with visible signs of water damage shall not be installed. Wall and floor framing shall not be enclosed when the framing members exceed 19% moisture content. Moisture content shall be verified in compliance with the following: 1. Moisture content shall be determined with either a probe-type or a contact-type moisture meter. Equivalent moisture verification methods may be approved by the enforcing agency and shall satisfy requirements in Section 101.8. 2. Moisture readings shall be taken at a point 2 feet to 4 feet from the grade-stamped end of each piece to be verified. 3. At least 3 random moisture readings shall be performed on wall and floor framing with documentation acceptable to the enforcing agency provided at the time of approval to enclose the wall and floor framing. Insulation products which are visibly wet or have a high moisture content shall be replaced or allowed to dry prior to enclosure in wall or floor cavities. Manufacturers' drying recommendations shall be followed for wet-applied insulation products prior to enclosure.

HCD SHL 605 (Rev. 4/16) Page 8 of 10

RESIDENTIAL MANDATORY MEASURES
EFFECTIVE JANUARY 1, 2017
2016 CALGREEN CODE

SECTION	REQUIREMENTS
Division 4.5 – ENVIRONMENTAL QUALITY (INDOOR AIR QUALITY & EXHAUST)	
	Bathroom exhaust fans
4.506.1	Each bathroom shall be mechanically ventilated and shall comply with the following: 1. Fans shall be ENERGY STAR compliant and be ducted to terminate outside the building. 2. Unless functioning as a component of a whole house ventilation system, fans must be controlled by a humidity control. a) Humidity controls shall be capable of manual or automatic adjustment between a relative humidity range of less than 50% to a maximum of 80%. b) A humidity control may be a separate component to the exhaust fan and is not required to be integral or built-in. Note: For CALGreen a "bathroom" is a room which contains a bathtub, shower, or tub/shower combination. Fans or mechanical ventilation is required in each bathroom.
Division 4.5 – ENVIRONMENTAL QUALITY (ENVIRONMENTAL COMFORT)	
	Heating and air conditioning system design
4.507.2	Heating and air conditioning systems shall be sized, designed, and equipment selected using the following methods: 1. The heat loss and heat gain is established according to ANSI/ACCA 2 Manual J – 2011 (Residential Load Calculation), ASHRAE handbooks or other equivalent design software or methods. 2. Duct systems are sized according to ANSI/ACCA 1 Manual D – 2014 (Residential Duct Systems), ASHRAE handbooks or other equivalent design software or methods. 3. Select heating and cooling equipment according to ANSI/ACCA 3 Manual S – 2014 (Residential Equipment Selection) or other equivalent design software or methods. Exception: Use of alternate design temperatures necessary to ensure the systems functions are acceptable.
CHAPTER 7 – INSTALLER & SPECIAL INSPECTOR QUALIFICATION (QUALIFICATIONS, VERIFICATIONS)	
	Installer training
702.1	HVAC system installers shall be trained and certified in the proper installation of HVAC systems and equipment by a recognized training or certification program. Examples of acceptable HVAC training and certification programs include but are not limited to the following: 1. State certified apprenticeship programs. 2. Public utility training programs. 3. Training programs sponsored by trade, labor or statewide energy consulting or verification organizations. 4. Programs sponsored by manufacturing organizations. 5. Other programs acceptable to the enforcing agency.

HCD SHL 605 (Rev. 4/16) Page 9 of 10

RESIDENTIAL MANDATORY MEASURES
EFFECTIVE JANUARY 1, 2017
2016 CALGREEN CODE

SECTION	REQUIREMENTS
Division 4.3 – WATER EFFICIENCY AND CONSERVATION (INDOOR WATER USE)	
	Water conserving plumbing fixtures and fittings
4.303.1	Plumbing fixtures and fittings shall comply with the following: 4.303.1.1 Water Closets: ≤ 1.28 gal/flush 4.303.1.2 Wall Mounted Urinals: ≤ 0.125 gal/flush; all other urinals ≤ 0.5 gal/flush 4.303.1.3.1 Single Showerheads: ≤ 2.0 gpm @ 80 psi 4.303.1.3.2 Multiple Showerheads: combined flow rate of all showerheads controlled by a single valve shall not exceed 2.0 gpm @ 80 psi, or only one shower outlet is to be in operation at a time 4.303.1.4.1 Residential Lavatory Faucets: Maximum Flow Rate ≤ 1.2 gpm @ 60 psi; Minimum Flow Rate ≥ 0.8 gpm @ 20 psi 4.303.1.4.2 Lavatory Faucets in Common and Public Use Areas of Residential Buildings: ≤ 0.5 gpm @ 60 psi 4.303.1.4.3 Metering Faucets: ≤ 0.25 gallons per cycle 4.303.1.4.4 Kitchen Faucets: ≤ 1.8 gpm @ 60 psi; temporary increase to 2.2 gpm allowed but shall default to 1.8 gpm
	Standards for plumbing fixtures and fittings
4.303.2	Plumbing fixtures and fittings shall be installed in accordance with the California Plumbing Code, and shall meet applicable standards referenced in Table 1701.1 of the California Plumbing Code.
Division 4.3 – WATER EFFICIENCY AND CONSERVATION (OUTDOOR WATER USE)	
	Outdoor potable water use in landscape areas
4.304.1	After December 1, 2015, new residential developments with an aggregate landscape area equal to or greater than 500 square feet shall comply with one of the following: 1. A local water efficient landscape ordinance or the current California Department of Water Resources' Model Water Efficient Landscape Ordinance (MWELO), whichever is more stringent, or 2. Projects with aggregate landscape areas less than 2500 square feet may comply with the MWELO's Appendix D Prescriptive Compliance Option.
Division 4.4 – MATERIAL CONSERVATION & RESOURCE EFFICIENCY (ENHANCED DURABILITY & REDUCED MAINTENANCE)	
	Rodent proofing
4.406.1	Annular spaces around pipes, electric cables, conduits or other openings in sole/bottom plates at exterior walls shall be closed with cement mortar, concrete masonry or a similar method acceptable to the enforcing agency to prevent passage of rodents.
Division 4.4 – MATERIAL CONSERVATION & RESOURCE EFFICIENCY (CONSTRUCTION WASTE REDUCTION, DISPOSAL & RECYCLING)	
	Construction waste reduction of at least 65%
4.408.1	• Recycle and/or salvage for reuse a minimum of 65% of the nonhazardous construction and demolition waste in accordance with either Section 4.408.2, 4.408.3 or 4.408.4; OR meet a more stringent local construction and demolition waste management ordinance.

HCD SHL 605 (Rev. 4/16) Page 4 of 10

RESIDENTIAL MANDATORY MEASURES
EFFECTIVE JANUARY 1, 2017
2016 CALGREEN CODE

SECTION	REQUIREMENTS
4.408.1 continued	• Documentation is required per Section 4.408.5. **Exceptions:** 1. Excavated soil and land-clearing debris. 2. Alternative waste reduction methods developed by working with local enforcing agencies if diversion or recycle facilities capable of compliance with this item do not exist or are not located reasonably close to the jobsite. 3. The enforcing agency may make exceptions to the requirements of this section when isolated jobsites are located in areas beyond the haul boundaries of the diversion facility.
	Construction waste management plan
4.408.2	Submit a construction waste management plan meeting Items 1 through 5 in Section 4.408.2. Plans shall be updated as necessary and shall be available for examination during construction.
	Waste management company
4.408.3	Utilize a waste management company, approved by the enforcing agency, which can provide verifiable documentation that diverted construction and demolition waste materials meet the requirements in Section 4.408.1.
	Waste stream reduction alternative
4.408.4 4.408.4.1	• (LR) Projects that generate a total combined weight of construction and demolition waste disposed in landfills, which do not exceed 2 pounds per square foot of the building area shall meet the minimum 65% construction waste reduction requirement in Section 4.408.1. • Projects that generate a total combined weight of construction and demolition waste disposed in landfills, which do not exceed 2 pounds per square foot of the building area, shall meet the minimum 65% construction waste reduction requirement in Section 4.408.1.
Division 4.4 – MATERIAL CONSERVATION & RESOURCE EFFICIENCY (BUILDING MAINTENANCE & OPERATION)	
	Operation and maintenance manual
4.410.1	At the time of final inspection, a manual, compact disc, web-based reference or other media acceptable to the enforcing agency which covers 10 specific subject areas shall be placed in the building.
	Recycling by occupants
4.410.2	Where 5 or more multifamily dwelling units are constructed on a building site, provide readily accessible area(s) that serves all buildings on the site and is identified for the depositing, storage and collection of non-hazardous materials for recycling, including (at minimum) paper, corrugated cardboard, glass, plastics, organic waste, and metals or meet a lawfully enacted local recycling ordinance, if more restrictive. **Exception:** Rural jurisdictions that meet and apply for the exemption in Public Resources Code Section 42649.82 (a)(2)(A) et. seq. are not required to comply with the organic waste portion of this section.

HCD SHL 605 (Rev. 4/16) Page 5 of 10

RESIDENTIAL MANDATORY MEASURES
EFFECTIVE JANUARY 1, 2017
2016 CALGREEN CODE

SECTION	REQUIREMENTS
Division 4.5 – ENVIRONMENTAL QUALITY (FIREPLACES)	
	General
4.503.1	Any installed gas fireplace shall be a direct-vent sealed-combustion type. Any installed woodstove or pellet stove shall comply with U.S. EPA New Source Performance Standards (NSPS) emission limits as applicable, and shall have a permanent label indicating they are certified to meet the emission limits. Woodstoves, pellet stoves and fireplaces shall also comply with all applicable local ordinances.
Division 4.5 – ENVIRONMENTAL QUALITY (POLLUTANT CONTROL)	
	Protection during construction
4.504.1	At the time of rough installation, during storage on the construction site and until final startup of the heating, cooling and ventilating equipment, all duct and other related air intake and distribution component openings shall be covered. Tape, plastic, sheetmetal or other methods acceptable to the enforcing agency to reduce the amount of water, dust and debris entering the system may be used.
	Adhesives, sealants and caulks
4.504.2.1	Adhesives, sealants and caulks used on the project shall meet the requirements of the following standards unless more stringent local or regional air pollution or air quality management district rules apply: 1. Adhesives, adhesive bonding primers, adhesive primers, sealants, sealant primers, and caulks shall comply with local or regional air pollution control or air quality management district rules where applicable, or SCAQMD Rule 1168 VOC limits, as shown in Tables 4.504.1 or 4.504.2, as applicable. Such products shall also comply with Rule 1168 prohibition on the use of certain toxic compounds (chloroform, ethylene dichloride, methylene chloride, perchloroethylene and trichloroentylene), except for aerosol products as specified in Subsection 2 below. 2. Aerosol adhesives, and smaller unit sizes of adhesives, and sealant or caulking compounds (in units of product, less packaging, which do not weigh more than 1 pound and do not consist of more than 16 fluid ounces) shall comply with statewide VOC standards and other requirements, including prohibitions on use of certain toxic compounds, of the California Code of Regulations (CCR), Title 17, commencing with Section 94507.
	Paints and coatings
4.504.2.2	Architectural paints and coatings shall comply with VOC limits in Table 1 of the Air Resources Board Architectural Suggested Control Measure, as shown in Table 4.504.3, unless more stringent local limits apply. The VOC content limit for coatings that do not meet the definitions for the specialty coatings categories listed in Table 4.504.3 shall be determined by classifying the coating as Flat, Nonflat, or Nonflat-High Gloss coating, based on its gloss, as defined in subsections 4.21, 4.36, and 4.37, of the 2007 California Air Resources Board, Suggested Control Measure, and the corresponding Flat, Nonflat, or Nonflat-High Gloss VOC limit in Table 4.504.3 shall apply.

HCD SHL 605 (Rev. 4/16) Page 6 of 10

RESIDENTIAL MANDATORY MEASURES
EFFECTIVE JANUARY 1, 2017
2016 CALGREEN CODE

SECTION	REQUIREMENTS
Chapter 1 - ADMINISTRATION	
	Scope
101.3.1	Applies to ALL newly constructed residential buildings: low-rise, high-rise, and hotels/motels.
Chapter 3 - GREEN BUILDING	
	Additions and alterations
301.1.1	• Applies to additions or alterations of residential buildings where the addition or alteration increases the building's conditioned area, volume, or size. • Requirements only apply within the specific area of the addition or alteration. • Note directs code users to Civil Code Section 1101.1 et seq., regarding replacement of non-compliant plumbing fixtures.
	Low-rise and high-rise buildings
301.2	Banners identify provisions applying to low-rise only [LR] or high-rise only [HR].
Division 4.1 - PLANNING AND DESIGN (SITE DEVELOPMENT)	
	Storm water drainage and retention during construction
4.106.2	Projects which disturb less than 1 acre of soil and are not part of a larger common plan of development shall manage storm water drainage during construction.
	Grading and paving
4.106.3	Construction plans shall indicate how the site grading or drainage system will manage all surface water flows to keep water from entering buildings. Exception for additions and alterations which do not alter the existing drainage path.
	Electric vehicle (EV) charging for new construction
4.106.4	• Comply with Section 4.106.4.1 and 4.106.4.2 for future installation and use of EV chargers. • Electric vehicle supply equipment (EVSE) shall be installed in accordance with the California Electrical Code, Article 625. • Exceptions on a case-by-case basis as determined by the Local Enforcing Agency: 1. Where there is no commercial power supply. 2. Verification that meeting requirements will alter the local utility infrastructure design requirements on the utility side of the meter increasing costs to the homeowner/developer by more than $400.00 per dwelling unit.
	EV charging: 1- & 2-family dwellings/townhouses with attached private garages
4.106.4.1 & 4.106.4.1.1	• Install a listed raceway to accommodate a dedicated 208/240-volt branch circuit for each dwelling unit. • Raceway shall not be less than trade size 1 (nominal 1-inch inside diameter). • Raceway shall originate at the main service or subpanel and terminate into a listed cabinet, box or other enclosure in close proximity to the proposed location of an EV charger. • Raceways are required to be continuous at enclosed, inaccessible or concealed areas and spaces. • Service panel and/or subpanel shall provide capacity to install a 40-ampere minimum dedicated branch circuit and space(s) reserved to permit installation of a branch circuit overcurrent protective device. Service panel or subpanel circuit

HCD SHL 605 (Rev. 4/16) Page 1 of 10

RESIDENTIAL MANDATORY MEASURES
EFFECTIVE JANUARY 1, 2017
2016 CALGREEN CODE

SECTION	REQUIREMENTS
4.106.4.1 & 4.106.4.1.1 continued	directory shall identify the overcurrent protective device space(s) reserved for future EV charging as "EV CAPABLE". The raceway termination location shall be permanently and visibly marked as "EV CAPABLE".
	EV charging for multifamily dwellings
4.106.4.2	• Applies to building sites with 17 or more multifamily dwelling units constructed on a site. • 3% of the total number of parking spaces provided for all types of parking facilities, but in no case less than one, shall be electric vehicle charging spaces (EV spaces) capable of supporting future EVSE. Calculations for the number of EV spaces shall be rounded up to the nearest whole number. **Note:** Construction documents are intended to demonstrate the project's capability and capacity for facilitating future EV charging. There is no requirement for EV spaces to be constructed or available until EV chargers are installed for use.
	EV charging space (EV space) locations
4.106.4.2.1	• Construction documents shall indicate the location of proposed EV spaces. At least 1 EV space shall be located in common use areas and available for use by all residents. • When EV chargers are installed, EV spaces required by Section 4.106.4.2.2, Item 3, shall comply with at least 1 of the following options: 1. The EV space shall be located adjacent to an accessible parking space meeting the requirements of the California Building Code, Chapter 11A, to allow use of the EV charger from the accessible parking space. 2. The EV space shall be located on an accessible route to the building, as defined in the California Building Code, Chapter 2.
	EV charging space (EV space) dimensions
4.106.4.2.2	EV spaces shall be designed to comply with the following: 1. The minimum length of each EV space shall be 18 feet. 2. The minimum width of each EV space shall be 9 feet. 3. One in every 25 EV spaces, but not less than 1, shall also have an 8-foot wide minimum aisle. A 5-foot wide minimum aisle shall be permitted provided the minimum width of the EV space is 12 feet. a) Surface slope for this EV space and aisle shall not exceed 1 unit vertical in 48 units horizontal (2.083% slope) in any direction.
	Single EV space required
4.106.4.2.3	• Install listed raceway capable of accommodating a 208/240-volt dedicated branch circuit. ▪ The raceway shall not be less than trade size 1 (nominal 1-inch inside diameter). ▪ The raceway shall originate at the main service or subpanel and shall terminate into a listed cabinet, box or enclosure in close proximity to the proposed location of the EV space.

HCD SHL 605 (Rev. 4/16) Page 2 of 10

RESIDENTIAL MANDATORY MEASURES
EFFECTIVE JANUARY 1, 2017
2016 CALGREEN CODE

SECTION	REQUIREMENTS
4.106.4.2.3 continued	• Construction documents shall identify the raceway termination point. • The service panel and/or subpanel shall provide capacity to install a 40-ampere minimum dedicated branch circuit and space(s) reserved to permit installation of a branch circuit overcurrent protective device.
	Multiple EV spaces required
4.106.4.2.4	• Construction documents shall indicate raceway termination point and proposed location of future EV spaces and EV chargers. Construction documents shall also provide information on amperage of future EVSE, raceway method(s), wiring schematics and electrical load calculations to verify electrical panel service capacity and electrical system, including any on-site distribution transformer(s), have sufficient capacity to simultaneously charge all EVs at all required EV spaces at full rated amperage of the EVSE. • Plan design shall be based upon a 40-ampere minimum branch circuit. • Raceways and related components planned to be installed underground, enclosed, inaccessible or in concealed areas and spaces shall be installed at the time of original construction.
	Identification
4.106.4.2.5	The service panel or subpanel circuit directory shall identify the overcurrent protective device space(s) reserved for future EV charging purposes as "EV CAPABLE" in accordance with the California Electrical Code. **Notes:** 1. The California Department of Transportation adopts and publishes the "California Manual on Uniform Traffic Control Devices (California MUTCD)" to provide uniform standards and specifications for all official traffic control devices in California. Zero Emission Vehicle Signs and Pavement Markings can be found in the New Policies & Directives Number 12-01. Website: http://www.dot.ca.gov/hq/traffops/policy/13-01.pdf 2. See Vehicle Code Section 22511 for EV charging space signage in off-parking facilities and for use of EV charging spaces. 3. The Governor's Office of Planning and Research (OPR) published a "Zero-Emission Vehicle Community Readiness Guidebook" which provides helpful information for local governments, residents and businesses. Website: http://opr.ca.gov/docs/ZEV_Guidebook.pdf
Division 4.2- ENERGY EFFICIENCY	
	Scope
4.201.1 & 5.201.1	• Energy efficiency requirements for low-rise residential (Section 4.201.1) and high-rise residential/hotels/motels (Section 5.201.1) are now in both residential and nonresidential chapters of CALGreen. • Standards for residential buildings do not require compliance with levels of minimum energy efficiency beyond those required by the 2016 California Energy Code.

HCD SHL 605 (Rev. 4/16) Page 3 of 10

MODERN HOUSE
ARCHITECTURE & DESIGN
1265 Indiana Street
San Francisco Ca. 94107
P. 415.800.8520
C. 415.596.7281
modernhouse@mac.com
www.modernhousearchitects.com

LICENSED ARCHITECT CURTIS C. CLINE C26583 6.30.21 RENEWAL DATE STATE OF CALIFORNIA

Curt Cline Architect

BUILDING PERMIT REVIEW SET
029-35-005
PANGAN RESIDENCE
AUGUSTA CT
MILPITAS, CA

Revisions:

1	BUILDING COMMENTS 11/29/2018

CALGREEN RESIDENTIAL MANDATORY MEASURES

SCALE : AS NOTED

DATE : 07.26.2018

SHEET : A0.1

FILE PATH: /Users/moderndesignco/Dropbox/000 ARCHICAD FILES/Pangan Arch/CAD/PANGEN_BUILDING_Comments2_10062020.pln • LAST SAVED BY: Modern House - Natsumi • PRINTED ON 4/27/21 @ 3:27 PM
PROJECT COMPANY • PANGAN RESIDENCE • *** PROJECT NUMBER *** • A0.2A

ENERGY EFFICIENCY: MANDATORY REQUIRMENTS									
12	4.201.1	Building meets or exceeds the requirements of the California Building Energy Efficiency Standards	A0.1	4.201.1		X			
WATER EFFICIENCY & CONSERVATION: MANDATORY REQUIREMENTS									
13	4.303.1	Plumbing Fixtures (water closets and urinals) and fittings (faucets and showerheads) installed in residential buildings shall comply with the prescriptive requirements of Section 4.303.1.1 through 4.303.1.4.4.	A0.1	4.303.1		X			
14	4.303.2	Plumbing fixtures and fittings required in Section 4.303.1 shall be installed in accordance with the CPC and shall meet the applicable referenced standards.	A0.1	4.303.2		X			
15	4.304.1	Outdoor potable water use in landscape areas	A0.1	4.304.1		X			

			APPLICANT TO COMPLETE Plan Check Review Data		***Enforcing Agency to specify* at plan check** which entity will provide verification			***County Inspectors to verify*** *completion signatures and supporting documentation at Final*	
ITEM #	CALGreen CODE SECTION	REQUIREMENT	REFERENCE SHEET (SHEET # OR N/A)	Compliance Documentation (e.g. note # or detail #)	Enforcing Agency	Installer/ Designer	Third Party	Date	Signature
WATER EFFICIENCY & CONSERVATION : TIER 1 REQUIREMENTS									
16	A4.601.4.2 (3.1)	First Elective Measure from Division A4.3	A0.1	A4.303.3		X			
17	A4.601.4.2 (3.1)	Second Elective Measure from Division A4.3	A0.1	A4.303.5		X			
MATERIAL CONSERVATION & RESOURCE EFFICIENCY: MANDATORY REQUIREMENTS									
18	4.406.1	Annular spaces around pipes, electric cables, conduits or other openings in plates at exterior walls shall be protected against the passage of rodents by closing such openings with cement mortar, concrete masonry or similar method acceptable to the enforcing agency.	A0.1	4.406.1		X			
19	4.408.1	Recycle and/or salvage for reuse a minimum of 65 percent of the nonhazardous construction and demolition waste.	A0.1	4.408.1		X			
20	4.410.1	An operation and maintenance manual shall be provided to the building occupant or owner.	A0.1	4.410.1		X			
MATERIAL CONSERVATION & RESOURCE EFFICIENCY: TIER 1 REQUIREMENTS									
21	A4.403.2	Cement use in foundation mix design is reduced. Tier 1: Not less than 20 percent reduction in cement use.	A0.1	A4.403.2		X			
22	A4.405.3	Postconsumer or preconsumer recycled content value (RCV) materials are used on the project. Tier 1: Not less than a 10-percent recycled content value.	A0.1	A4.405.3		X			
23	A4.408.1	Reduce construction waste by at least 65%. Documentation shall be submitted to the enforcing agency demonstrating compliance.	A0.1	A4.408.1		X			
24	A4.601.4.2 (4.4)	First Elective Measure from Division A4.4	A0.1	4.404.2		X			
25	A4.601.4.2 (4.4)	Second Elective Measure from Division A4.4	A0.1	4.404.2		X			

(CONTINUE TO SHEET A0.2)

COUNTY OF SANTA CLARA

2016 CALGREEN RESIDENTIAL CHECKLIST

New Buildings < 3,000 SF (MAND), ≥ 3,000 SF (MAND + TIER 1) County Amendments to CALGreen in *Italics*.
Mandatory Tier 1 measures for each division are listed separately. Architect/Designer must choose elective measures *in addition to mandatory measures* for each division. Specify on the checklist the electives that are chosen.

Directions to Applicant: **Incorporate this form onto the plans. Provide complete project information and complete the Plan Check Review Data found in the table below.**

Project Data:	
Address:	
APN:	
Owner:	

Date:

			APPLICANT TO COMPLETE Plan Check Review Data		***Enforcing Agency to specify at plan check*** which entity will provide verification			***County Inspectors to verify*** *completion signatures and supporting documentation at Final*	
ITEM #	CALGreen CODE SECTION	REQUIREMENT	REFERENCE SHEET (SHEET # OR N/A)	Compliance Documentation (e.g. note # or detail #)	Enforcing Agency	Installer/ Designer	Third Party	Date	Signature
PLANNING AND DESIGN: MANDATORY REQUIREMENTS									
1	4.106.2	A plan is developed and implemented to manage storm water drainage during construction.	X			X			
2	4.106.3	Construction plans shall indicate how site grading or a drainage system will manage all surface water flows to keep water from entering buildings.	X			X			
3	4.106.4, *4.106.4.1*	*For **new** dwellings and the **rebuild** of existing dwellings that include a panel upgrade or construction between panel and parking,* provide capability for electric vehicle charging; and 3 percent of total parking spaces, as specified, for multifamily dwellings.	A0.1, A5.1	1/A5.1		X			
4	*4.106.4.2*	*For new **multifamily** dwellings, at least 3 percent of the total number of parking spaces provided for all types of parking facilities, but not less than one, shall be electric vehicle charging station (EVCS) capable.*	N/A			X			
5	*4.106.4.3*	***Mulifamily dwellings** with more than 100 new parking spaces shall install Level 2 Electric Vehicle Supply Equipment (EVSE) to service 1 percent of the total number of parking spaces.*	N/A			X			
6	*4.106.4.4*	***Shared Parking**. When parking is provided to new buildings from shared parking lots, including existing and new parking lots, install pre-wiring and/or EVSE among both the existing and new parking lots. Not applicable if the building does not require the installation of new parking spaces.*	N/A			X			

			APPLICANT TO COMPLETE Plan Check Review Data		***Enforcing Agency to specify at plan check*** which entity will provide verification			***County Inspectors to verify*** *completion signatures and supporting documentation at Final*	
ITEM #	CALGreen CODE SECTION	REQUIREMENT	REFERENCE SHEET (SHEET # OR N/A)	Compliance Documentation (e.g. note # or detail #)	Enforcing Agency	Installer/ Designer	Third Party	Date	Signature
PLANNING AND DESIGN: TIER 1 REQUIREMENTS									
7	A4.106.2.3	Displaced topsoil shall be stockpiled for reuse in a designated area and covered or protected from erosion.	A0.1	A4.106.2.3		X			
8	A4.106.4	Not less than 20 percent of the total parking, walking or patio surfaces shall be permeable.	A0.1	A4.106.4		X			
9	A4.106.5	Cool Roof for reduction of heat island effect. Roof covering shall meet or exceed the values contained in Table A4.106.5.1(1) for low-rise residential or Table A4.106.5.1.(3) for high-rise residential, hotels or motels.	A0.1	A4.106.5		X			
10	A4.601.4.2 (1.5)	First Elective Measure from Division A4.1	A0.1	A4.106.7		X			
11	A4.601.4.2 (1.5)	Second Elective Measure from Division A4.1	A0.1	A4.106.8		X			

THESE DRAWINGS ARE THE ORIGINAL UNPUBLISHED WORK OF THE ARCHITECT AND ARE NOT TO BE USED, DISCLOSED WITHOUT THE WRITTEN PERMISSION OF THE ARCHITECT.
© MODERN HOUSE

MODERN HOUSE
ARCHITECTURE & DESIGN
1265 Indiana Street
San Francisco Ca. 94107
P. 415.800.8520
C. 415.596.7281
modernhouse@mac.com
www.modernhousearchitects.com

LICENSED ARCHITECT CURTIS C. CLINE C26383 6.30.21 RENEWAL DATE STATE OF CALIFORNIA

Curt Cline Architect

BUILDING PERMIT REVIEW

029-35-005

PANGAN RESIDENCE

AUGUSTA CT
MILPITAS, CA

Revisions:

2016 CALGREEN RESIDENTIAL CHECKLIST

SCALE : AS NOTED

DATE : 07.26.2018

SHEET : **A0.2A**

FILE PATH: /Users/modernidesignco/Dropbox/000 ARCHICAD FILES/Pangan Archicad/PANGEN_BUILDING_Comments2_10062020.pln • LAST SAVED BY: Modern House - Natsumi • PRINTED ON 4/27/21 @ 3:27 PM
PROJECT COMPANY • PANGAN RESIDENCE • *** PROJECT NUMBER *** • A0.2B

ITEM #	CALGreen CODE SECTION	REQUIREMENT	APPLICANT TO COMPLETE Plan Check Review Data: REFERENCE SHEET (SHEET # OR N/A)	Compliance Documentation (e.g. note # or detail #)	Enforcing Agency to specify at plan check which entity will provide verification: Enforcing Agency	Installer/ Designer	Third Party	County Inspectors to verify completion signatures and supporting documentation at Final: Date	Signature
35	4.505.3	Moisture content of building materials used in wall and floor framing shall not exceed 19% and shall be checked before enclosure.	A0.1	4.505.3		X			
36	4.507.2	Duct systems are sized, designed, and equipment is selected using the following methods: 1. Establish heat loss and heat gain values according to ANSI/ACCA 2 Manual J-2004 or Equivalent 2. Size duct systmes according to ANSI/ACCA 1 Manual D-2009 or equivalent. 3. Select heating and cooling equipment according to ANSI/ACCA 3 Manual S-2004 or equivalent.	A0.1	4.507.2		X			
ENVIROMENTAL QUALITY: TIER 1 REQUIREMENTS									
37	A4.504.2	At least 90% of resilient flooring shall comply with VOC limits.	A0.1	A4.504.2		X			
38	A4.504.3	Thermal insulation in the builing shall be in compliance with VOC limits.	A0.1	A4.504.3		X			
39	A4.601.4.2 (5.3)	Elective measure from Division A4.5.	A0.1	A4.506.3		X			
INSTALLER AND SPECIAL INSPECTOR QUALIFICATIONS									
40	702.1	HVAC system installers are trained and certified in the proper installation of HVAC systems.	A0.1	702.1		X			
41	702.2	Special inspectors employed by the enforcing agency must be qualified and able to demonstrate competence in the discipline they are inspecting.	A0.1	702.2		X			
42	703.1	Verification of compliance with this code may include constuction documents, plans, specifications builder or installer certification, inspection reports, or other methods acceptable to the enforcing agency which show substantial conformance.	A0.1	703.1		X			

ITEM #	CALGreen CODE SECTION	REQUIREMENT	APPLICANT TO COMPLETE Plan Check Review Data: REFERENCE SHEET (SHEET # OR N/A)	Compliance Documentation (e.g. note # or detail #)	Enforcing Agency to specify at plan check which entity will provide verification: Enforcing Agency	Installer/ Designer	Third Party	County Inspectors to verify completion signatures and supporting documentation at Final: Date	Signature
ENVIRONMENTAL QUALITY: MANDATORY REQUIREMENTS									
26	4.503.1	Any installed gas fireplace shall be a direct-vent sealed-combusion type. Any installed woodstove or pellet stove shall comply with US EPA Phase II emission limits where applicable. Woodstoves, pellet stoves and fireplaces shall also comply with applicable local ordinances.	A0.1	4.503.1		X			
27	4.504.1	Duct openings and other related air distribution component openings shall be covered during construction.	A0.1	4.504.1		X			
28	4.504.2.1	Adhesives, sealants and caulks shall be compliant with VOC and other toxic compound limits.	A0.1	4.504.2.1		X			
29	4.504.2.2	Paints, stains and other coatings shall be compliant with VOC limits.	A0.1	4.504.2.2		X			
30	4.504.2.3	Aerosol paints and coatings shall be compliant with product weighted MIR limits for ROC and other toxic compounds.	A0.1	4.504.2.3		X			
31	4.504.2.4	Documentation shall be provided to verify that compliant VOC limit finish materials have been used.	A0.1	4.504.2.4		X			
32	4.504.3	Carpet and carpet systems shall be compliant with VOC limits.	A0.1	4.504.3		X			
33	4.504.4	80 percent of floor area receiving resilient flooring shall comply with the VOC-emission limits defined in the Collaborative for High Performance Schools (CHPS), High Performance Products Database or be certified under the Resilient Floor Covering Institute (FRCI) FloorScore program; or meet California Department of Public Health Specification 01350.	A0.1	4.504.4		X			
34	4.505.2	Vapor retarder and capillary break is installed at slab-on-grade foundations.	A0.1	4.505.2		X			

THESE DRAWINGS ARE THE ORIGINAL UNPUBLISHED WORK OF THE ARCHITECT AND MAY NOT BE USED OR DISCLOSED WITHOUT THE WRITTEN PERMISSION OF THE ARCHITECT.
©MODERN HOUSE

MODERN HOUSE
ARCHITECTURE & DESIGN
1265 Indiana Street
San Francisco Ca. 94107
P. 415.800.8520
C. 415.596.7281
modernhouse@mac.com
www.modernhousearchitects.com

LICENSED ARCHITECT CURTIS C. CLINE C26383 6.30.21 RENEWAL DATE STATE OF CALIFORNIA

Curt Cline Architect

BUILDING PERMIT REVIEW

029-35-005

PANGAN RESIDENCE

AUGUSTA CT
MILPITAS, CA

Revisions:

2016 CALGREEN RESIDENTIAL CHECKLIST (CONT'D)

SCALE : AS NOTED

DATE : 07.26.2018

SHEET : **A0.2B**

FILE PATH: /Users/moderndesignco/Dropbox/000 ARCHICAD FILES/Pangan ArchiCAD/PANGEN_BUILDING_Comments2_10062020.pln • LAST SAVED BY: Modern House - Natsumi • PRINTED ON 4/27/21 @ 3:27 PM
PROJECT COMPANY • PANGAN RESIDENCE • *** PROJECT NUMBER *** • A0.3

Notes to Bidders

-Present all Requests for Information to Architect, the architect shall respond to RFI's within 48 hrs of request or at next business day if over a weekend.

-Architect shall review any request for product substitution for approval, If accepted shall notify owner for final approval.

-All prepared bids shall be distributed to both the owner and the architect for review.

-The awarded Contractor shall carry all California required Insurance (General Liability, Automobile Liability, Employers Liability, and Course of Construction etc..)

-The intent of the Contract Documents is to include all items necessary for the proper execution and completion of the Work by the Contractor. The Contract Documents are complementary, and what is required by one shall be as binding as if required by all.

-Documents prepared by the Architect are instruments of the Architect's service for use solely with respect to this Project. The Architect shall retain all common law, statutory and other reserved rights, including the copyright. The Contractor, subcontractors, sub-subcontractors, and material or equipment suppliers are authorized to use and reproduce the instruments of service solely and exclusively for execution of the Work. The instruments of service may not be used for other Projects or for additions to this Project outside the scope of the Work without the specific written consent of the Architect.

-Contractors shall visit the site, become familiar with local conditions under which the Work is to be performed and correlated personal observations with requirements of the Contract Documents.

-If awarded the Contractor shall supervise and direct the Work, using the Contractor's best skill and attention. The Contractor shall be solely responsible for and have control over construction means, methods, techniques, sequences and procedures, and for coordinating all portions of the Work.

-The Contractor, as soon as practicable after award of the Contract, shall furnish in writing to the Owner through the Architect the names of subcontractors or suppliers for each portion of the Work. The Contractor shall not contract with any subcontractor or supplier to whom the Owner or Architect have made a timely and reasonable objection.

-If awarded the Contractor shall warrant the Owner and Architect that: (1) materials and equipment furnished under the Contract will be new and of good quality unless otherwise required or permitted by the Contract Documents; (2) the Work will be free from defects not inherent in the quality required or permitted; and (3) the Work will conform to the requirements of the Contract Documents.

-The awarded Contractor shall obtain and pay for the building permit and other permits and governmental fees, licenses and inspections necessary for proper execution and completion of the Work.

-The awarded Contractor shall promptly review, approve in writing and submit to the Architect Shop Drawings, Product Data, Samples and similar submittals required by the Contract Documents. Shop Drawings, Product Data, Samples and similar submittals are not Contract Documents.

-The awarded Contractor shall keep the premises and surrounding area free from accumulation of debris and trash related to the Work. At the completion of the Work, the Contractor shall remove its tools, construction equipment, machinery and surplus material; and shall properly dispose of waste materials.

-To the fullest extent permitted by law, the awarded Contractor shall indemnify and hold harmless the Owner, Architect, Architect's consultants and agents and employees of any of them from and against claims, damages, losses and expenses, including but not limited to attorneys' fees, arising out of or resulting from performance of the Work, provided that such claim, damage, loss or expense is attributable to bodily injury, sickness, disease or death, or to injury to or destruction of tangible property (other than the Work itself), but only to the extent caused by the negligent acts or omissions of the Contractor, a subcontractor, anyone directly or indirectly employed by them or anyone for whose acts they may be liable, regardless of whether or not such claim, damage, loss or expense is caused in part by a party indemnified hereunder.

-The Architect will provide administration of the Contract as described in the Contract Documents. The Architect will have authority to act on behalf of the Owner only to the extent provided in the Contract Documents.

-The Architect will visit the site at intervals appropriate to the stage of construction to become generally familiar with the progress and quality of the Work.

-The Architect will not have control over or charge of, and will not be responsible for, construction means, methods, techniques, sequences or procedures, or for safety precautions and programs in connection with the Work, since these are solely the Contractor's responsibility. The Architect will not be responsible for the Contractor's failure to carry out the Work in accordance with the Contract Documents.

-The Architect has authority to reject Work that does not conform to the Contract Documents.

-The Architect will promptly review and approve or take appropriate action upon Contractor's submittals, but only for the limited purpose of checking for conformance with information given and the design concept expressed in the Contract Documents.

-The Architect will promptly interpret and decide matters concerning performance under, and requirements of, the Contract Documents on written request.

-Interpretations and decisions of the Architect will be consistent with the intent of and reasonably inferable from the Contract Documents and will be in writing or in the form of drawings. When making such interpretations and decisions, the Architect will endeavor to secure faithful performance by both Owner and Contractor, will not show partiality to either and will not be liable for results of interpretations or decisions rendered in good faith.

-The awarded Contractor shall be responsible for initiating, maintaining and supervising all safety precautions and programs, including all those required by law in connection with performance of the Contract. The Contractor shall take reasonable precautions to prevent damage, injury or loss to employees on the Work, the Work and materials and equipment to be incorporated therein, and other property at the site or adjacent thereto. The Contractor shall promptly remedy damage and loss to property caused in whole or in part by the Contractor, or by anyone for whose acts the
Contractor may be liable

-The bidder shall meet the competency required to do the work indicated within these construction documents and specifications. The bid may be rejected if the bidder has established on former jobs, or a record for unsatisfactory installations, has repeatedly failed to complete contracts awarded to them, or otherwise fails to meet the standards set forth for the construction of this building. This is a house which is designed in a modernist style. The bidder shall show that he or she has constructed a home which is modern in style or of similar style and complexity as to demonstrate ability carry out construction in conformance with these Construction Documents

THESE DRAWINGS ARE THE ORIGINAL UNPUBLISHED WORK OF THE ARCHITECT AND ARE NOT TO BE USED, DISCLOSED WITHOUT THE WRITTEN PERMISSION OF THE ARCHITECT.
©MODERN HOUSE

MODERN HOUSE
ARCHITECTURE & DESIGN
1265 Indiana Street
San Francisco Ca. 94107
P. 415.800.8520
C. 415.596.7281
modernhouse@mac.com
www.modernhousearchitects.com

LICENSED ARCHITECT CURTIS C CLINE C26383 6.30.21 RENEWAL DATE STATE OF CALIFORNIA

Curt Cline Architect

BUILDING PERMIT REVIEW

029-35-005

PANGAN RESIDENCE

AUGUSTA CT
MILPITAS, CA

Revisions:

INSTRUCTIONS FOR BIDDERS

SCALE : AS NOTED

DATE : 07.26.2018

SHEET : **A0.3**

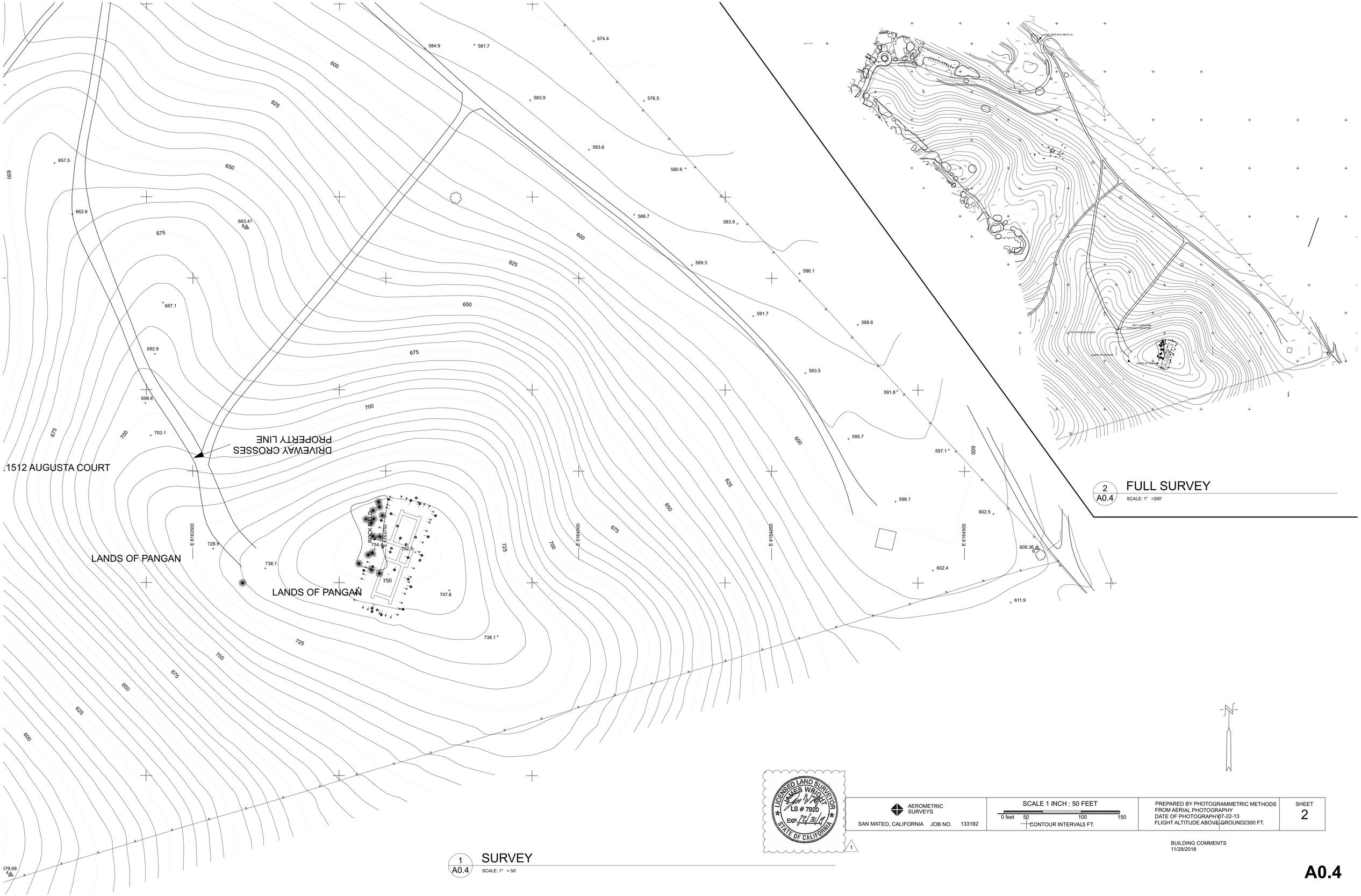

1 A0.4 SURVEY
SCALE: 1" = 50'

2 A0.4 FULL SURVEY
SCALE: 1" =200'

LICENSED LAND SURVEYOR
JAMES WRIGHT
LS # 7920
EXP. 12/31/19
STATE OF CALIFORNIA

1

AEROMETRIC SURVEYS SAN MATEO, CALIFORNIA JOB NO. 133182	SCALE 1 INCH : 50 FEET 0 feet 50 100 150 CONTOUR INTERVAL 5 FT.	PREPARED BY PHOTOGRAMMETRIC METHODS FROM AERIAL PHOTOGRAPHY DATE OF PHOTOGRAPHY 07-22-13 FLIGHT ALTITUDE ABOVE GROUND 2300 FT.	SHEET 2

BUILDING COMMENTS
11/29/2018

A0.4

FILE PATH: /Users/moderndesignco/Dropbox/000 ARCHICAD FILES/Pangan ArchiCAD/PANGEN_BUILDING_Comments2_10062020.pln • LAST SAVED BY: Modern House - Natsumi • PRINTED ON 4/27/21 @ 3:27 PM
PROJECT COMPANY • PANGAN RESIDENCE • *** PROJECT NUMBER *** • A0.5

DIVISION 10A SPECIALTIES - OTHERS

KITCHEN CABINETS
All kitchen cabinets to be provided by Padini or approved equal. Shop drawings shall be submitted prior to the execution or fabrication of cabinets

•COUNTERTOPS SHALL BE CAESARSTONE OR EQUAL
•PLUMBING FIXTURES TO BE HANSGROHE AXOR OR APPROVED EQUAL
•SEE OWNERS/ARCHITECT FOR APPLIANCE MANUFATURERS
•ALL BATH VANITIES SHALL BE KEUCO OR APPROVED EQUAL

•All hose bibs to have back flow protection. CPC 603.5.7

•Plastic pipe and fittings, other than those used for gas, shall meet the requirements of National Sanitation Foundation 14.

•All pipe, tube, fittings, solvent, cement, thread sealant, solder, and/or flux used in potable water systems intended to supply drinking water shall be in accordance with the requirements of National Sanitation Foundation 61.

DIVISION 11 -EQUIPMENT

Provide and install all equipment and appliances including all required connectors, fittings, trim and accessories as required for a complete installation.
Owner to provide Contractor with cut-sheet specification of all Owner selected equipment and appliances.

DIVISION 12 - FURNISHINGS

See Interior Designer and Drawings

DIVISION 13 - SPECIAL CONSTRUCTION

See Construction Drawings For Notes

DIVISION 14 - CONVEYING SYSTEM

THIS DIVISION NOT USED

DIVISION 15 - MECHANICAL

PLUMBING SYSTEM (See Plans For Unit Type and Location)
Domestic water supply, drainage, waste, venting, and natural gas supply piping systems shall be designed, specified and installed by the plumbing subcontractor. Layout, piping sizing, joint types, connections and all means of system support shall be determined by the plumbing subcontractor. All applicable codes, jurisdictional requirements and generally accepted standard of good construction practice regarding the system design, installation and operation will be met or exceeded. Provide as-built drawings to Owner upon completion.

COMBUSTION AIR
Combustion air for fuel burning water heaters will be provided in accordance with the 2016 California Plumbing Code

•The control valves in showers, tub/showers, bathtubs, and bidets must be pressure balanced or thermostatic mixing valves. CPC Sections 408, 409, 410.

•Water conserving fixtures: New water closets shall use no more than 1.28 gallons of water per flush, kitchen faucets may not exceed 1.8 GPM, lavatories are limited to 1.2 GPM, and showerheads may not exceed 1.8 GPM of flow, CPC Sections 407, 408, 411, 412

1

GAS WATER HEATERS
Requirements for gas water heaters installed to serve individual dwelling units: ES 150.0(n)
a) Gas piping sizing based upon a minimum input of 200,000 btu/hr.
b) A condensate drain installed no higher than 2" above the base of the heater that also allows for gravity drainage.
c) The "B" vent installed in a straight position from the room containing the water heater to the roof termination. (For future possible sleeving for high efficiency heater venting.)
d) A 120 volt receptacle accessible to the heater installed within 3'.

•Instantaneous water heaters shall have isolation valves on both the cold and the hot water piping leaving the water heater complete with hose bibs or other fittings on each valve for flushing the water heater when the valves are closed. ES 110.3

•All hot water piping sized 3⁄4" or larger is required to be insulated as follows: 1" pipe size or less: 1" thick insulation, larger pipe sizes require 1 1⁄2" thick insulation. Additionally, the 1⁄2" hot water pipe to the kitchen sink and the cold water pipe within 5' of the water heater are both required to be insulated.
ES 150.O(j)2

•Below grade hot water piping is required to be installed in a waterproof and non-crushable sleeve or casing that allows for replacement of both the piping and insulation.

•Every dwelling unit shall be provided with heating facilities capable of maintaining a room temperature of 68 degrees F at a location 3 feet above the floor and 2 feet from exterior walls in all habitable rooms. CRC 303.9

DIVISION 16 - ELECTRICAL

ELECTRICAL SYSTEMS
Electrical system design and installation shall be the responsibility of the electrical subcontractor. Number, location and capacity of circuits, conductor sizes, and all other necessary elements for a complete and functioning system shall be provided and installed.
Electrical subcontractor shall indicate on Record Drawing as provided by Architect, the circuit designation (circuit breaker number) on each main panel and sub-panel, each lighting fixture, convenience outlet, appliance, etc., and return this print to the Architect/Owner. All conductors to be insulated solid copper.

DIVISION 7 - THERMAL AND MOISTURE PROTECTION (CONT'D)

SKYLIGHTS (where appplicable see notes on Roof Plan)
Flat glass, double layer, tempered glazing over laminated glass at interior, Grey Tint over clear with fixed aluminum Black-painted frames; Curb-mounted type with galvanized iron saddle and step flashing as supplied by manufacturer and installation per manufacturer's instructions.

ROOFING MATERIAL
See Plans. Install in accordance with manufacturer's specifications.

SHOWER PAN
Provide and install shower pan with performed corners, for a watertight installation. (See Drawings for Shower Pan Details)

DIVISION 8 - DOOR AND WINDOWS

All doors, windows, and related accesssories are to be selected and approved by the Architect/Owner.

Interior Doors- Baldwin Lever 5115 in Satin Chrome
Interior Doors Hinges- Baldwin 1046 in Satin Chrome
Interior Doors Strike- Baldwin 5110.264.ASTR

Sleeping rooms shall have a window or exterior door for emergency escape. Section R310.

Glazing in the following locations should be shown on the plans as safety glazing material in accordance with Section R308.4:
a) Glazing in the walls/doors facing or containing bathtubs, showers, hot tubs, spas, whirlpools, saunas, steam rooms and indoor/outdoor swimming pools where the bottom exposed edge of the glazing is less than 60" above the standing surface. Exception: Glazing that is more than 60", measured horizontally, from the water's edge of a bathtub, hot tub, spa, whirlpool or swimming pool

R310.2 WINDOW WELLS
The minimum horizontal area of the window well shall be 9 square feet (0.84m2), with a minimum horizontal projection and width of 36 inches (914 mm). The area of the window well shall allow the emergency escape and rescue opening to be fully opened.
Exception: The ladder or steps required by Section R310.2.1 shall be permitted to encroach a maximum of 6 inches (152mm)into the required dimensions of the window well.
R310.2.1 LADDER AND STEPS
Window wells with a vertical depth greater than 44 inches (1118 mm) shall be equipped with a permanently affixed ladder or steps usable with the window in the fully open position. Ladders or steps required by this section shall not be required to comply with Sections R311.5 and R311.6. Ladders or rungs shall have an inside width of at least 12 inches (305 mm), shall project at least 3 inches (76 mm) from the wall and shall be spaced not more than 18 inches (457 mm) on center vertically for the full height of the window well.

DIVISION 9 - FINISHES

STUCCO
7/8"portland cement exterior plaster, three-coat (3) application, consisting of 3/8" thick keyed scratch coat and brown and fine-finish coats of 1/4" thickness each. Allow scratch coat to cure for not less than two (2) calender days and then thoroughly soak with water prior to application of brown coat. 1 1/2" galvanized wire lathing over two (2) layers of 'Pladterkraft' paper or one (1) layer of type 15 asphalt-saturated building felt. Provide and install all corner beads, drip screeds, expansion joints, etc., as required for crack-free installation.

GYPSUM BOARD
1/2" or 5/8" (See Drawings) regular type gypsum board panels at interior, conditioned locations, type WR panels at bathrooms, and other wet locations. Gypsum board installed where the stud or joist spacing exceeds 16" O.C. shall be 5/8" thick panels. Gypsum board at garage and under stairs shall be 5/8" type 'x' panels. Use panels of the maximum lengh possible to minimize joints, installing panels with drywall screws of appropriate type, length and spacing.
Tape all joints and apply drywall compound in multiple coats for a uniform finish. Firetaping alone will only be allowed at concealed locations. Smooth Level 5 Finish coat texture compound shall Used and shall have a uniform appearance, ready for painting. Where necessary, multiple layers of gypsum board may be built up to achieve required thickness.

GYPSUM BOARD ACCESSORIES
Squarenose type 1-1/8"*1-1/8" galvanized metal corner bead for all external corner conditions at interior of building. 1/2"L' shaped galvanized metal edge bead for all exposed gypsum board exposed edge conditions.

CERAMIC TILE
Ceramic tile to be approved by Owner/Architect. All shower and bathtub walls to be covered to a height of 70" minimum (See Elevations) above the drain inlet, and 4" beyond the fascia of the bathtub or shower pan.

INTERIOR CAULKING
Acrylic latex, premium grade, painted or in a color to match adjacent finishes as required.

PAINTING
Seal, prime, putty, spackle, caulk or otherwise prepare all surfaces to be painted. Prime and paint all exposed metal roofing accessories, sheet metal flashing, plumbing vents, etc., in a color to match adjacent roof covering materials. Protect all adjacent materials from overspray, splatters, drips, or other damage as required. Provide 1/2 gallon of each color and type of paint and stain used to the Owner upon completion.

DIVISION 10 -SPECIALTIES

ROOF VENTS
Standard galvanized iron vents for roofing applications.

FIERPLACE
Pre-fabricated, 'zero clearance', sheet metal fireplace equipped with glass doors, outside combustion air supply ducting, log grate, firestop spacers, approved spark arrestor/termination cap, storm collar and other items required for a complete installation and to meet Title 24 requirements. Refer to the plans for any additional requirements. Contractor to provide City agencies with Mnf# and ICBO# for approval prior to fabrication and/or installation.

Approved spark arrestors shall be installed on all chimneys. CRC Section R1003.9

Decorative shrouds shall not be installed at the termination of chimneys for factory-built fireplaces, except where such shrouds are listed and labeled for use with the specific system and installed in accordance with the manufacturer's installation instructions. Section CRC 1004.3.

CHIMNEYS
Chimneys shall extend at least 3' above the highest point where it passes through a roof and at least 2' higher than any portion of a building within a horizontal distance of 10 feet. CMC Section 802.5.4.

LOUVERS AND VENTS
Foundation vents to be galvanized, with 4 mesh galvanized screening. Attic vents to be galvanized with 8 mesh galvanized screening. Refer to the plans for sizes required.

DIVISION 6 - WOOD AND PLASTICS

LUMBER
GENERAL INSTRUCTIONS
See Structural sheets for standard requirements.
•Wood members less than 4" in width shall be Douglas Fir No.2, and 4" or wider shall be Douglas Fir No.1, unless otherwise noted on the plans.
•All connecting hardware shall be Simpson Company type, O.A.E., and installation shall be in accordance with the Manufacturer's requirements, unless noted otherwise on the plans.
•Glu-Laminated beams shall be of a combination providing a minimum Fb=2,400 PSI.Camber as indicated on the plans.
•Roof sheating shall be a minimum of 1/2" CDX plywood with exterior glue, Group 2. Exposed sheating at roof overhang shall be as indicated on the Architects plans.
•Wall sheating, if required, shall be a minimum of 3/8" CDX plywood with exterior glue, Group 2. See the plans for size.
•Bearing and non-bearing walls shall have double top-plates, lapped at intersections. Plate joints shall be straggered 4'-0" minimum, as indicated on the Structural details.
•Unless otherwise noted on the plans, exterior walls shall be of 2x4 and interior walls shall be of 2x4 studs (stud grade or better) at 16" on center.
•All headers shall be a Min. of 4x8 or as noted on the plans.
•All wood bearing on concrete or masonry shall be pressure treated Douglas Fir or Redwood.
•Holes for bolts shall be bored with a bit 1/16" larger than the nominal bolt diameter. All bolts shall be retightened prior to application of plywood, gypsum board, etc.
•Structural members shall not be cut for pipes, etc., unless specifically noted or detailed.
•2" solid blocking shall be placed between joists or rafters at all supports.
•All bolts bearing on wood shall have standard cut washers under head and nut, unless noted otherwise noted on the plans.
•Maximum concealed space shall be 10'-0". Provide 2" full depth blocking at dropped soffits, boxed-in eaves, floors and other locations as required.

NAILING
All wood framing members shall be well-nailed and in accordance with CRC Table R602.3(1). All nails exposed to weather shall be hot-dipped galvanized. Plywood sheating may be nailed with pneumatic nailing equipment, provided that plywood veneers are not pierced by nail heads. Nails to be hand set as required. Nail sheating according to Structural Notes on plans.

METAL FRAMING ACCESSORIES
Stamped and fabricated steel of the type indicated as required. Nails as supplied by manufacturer for this specific use. Nails shall be fully driven into holes of anchor as required. Products conforming to the requirements shall be provided and installled as required by the manufacturer. All metal framing accessories shall be galvanized or shop painted with rust inhibitive paint prior to installation.

FINISH CARPENTRY
CASEWORK
Caseworkshall be fabricated and installed by one (1) manufacturer. Casework and materials, finishes, door style, hardware and accessories shall be selected and approved by Architect/Owner prior to fabrication and installation. All products to meet or exceed 'custom grade' specifications of the Architectural Woodwork Institute.

INTERIOR TRIM
Door and window casings, baseboards and other misc, trim items to be selected and approved by Architect/Owner.

FLOOR UNDERLAYMENT
Plywood underlayment of appropriate thickness to bring adjacent finish flooring materials to uniform elevation. Set in adhesive bed of uniform thickness and attach to subfloor with staples of appropriate length at 6" O.C. maximum.

DIVISION 7 - THERMAL AND MOISTURE PROTECTION

GENERAL
All moisture protection to be installed per manufacturers specifications and in a manor as to prevent leakage, and as per Current SMACNA Standards

Polyicynene Spray Insulation: Icynene; hydrophobic, low-density, open-cell modified polyicynene
Icynene, Inc., 6747 Campobello Rd. Mississauga, Ontario L5N 2L7 Canada.
Tel 800-758-7325. Fax 905-363-0102.
Web Site: www.icynene.com.

BATT INSULATION
Foil-faced, Cotton batt insulation installed with foil facing towards conditioned space, with stapling flanges securely fastened to the inside faces of framing members per manufacturer's instructions. All batts to fit snugly between framing members. All products to be those of one (1) manufacturer as follows:

UltraTouch Bonded Logic, Inc. 24053 S Arizona Ave, Ste 151 Chandler, AZ 85248
480-812-9114 480-812-9633 (Fax)

FOAM SEALANT
One-part expanding polyurethane foam sealant. Apply to gap between rough frame opening and door frames, window frames and gaps created at utility and other penetrations of thr exterior envelope, including exterior wall sole plate-to-subfloor joint (manufacturer's installation specifications supercede the use of foam sealant).

BUILDING FELT
Use "Tyvek" housewrap by Dupont Company or 15lb. builders felt lapped 6" horizontal and vertical; use 2 layers in presence of stucco. Overlap each course 2" minimum at horizontal seams and 12" minimum at vertical seams. Securely fasten to structure. Installation instructions per manufacturer's specification. Seams to be taped per manufacturer's specifications.

JOINT SEALERS AND CAULKING
Exterior joint sealers and caulking to be silicon-based and in a color to match adjacent finishes (or paintable if adjacent to finishes are to be painted).

SHEET METAL FLASHING, GUTTERS, AND RAINWATER LEADERS
26 gauge galvanized iron minimum, pre-primed with rust-inhibitive primer as shown on the drawings and at other locations including roof to wall connections, outlookers, door and window headers, etc., to provide water-tight barrier. Install in accordance with SMACNA standards. Use 5" Box type gutters with rainwater leaders. Provide bulb strainers at all rainwater leader locations in gutters.

FLASHING AT WALL PENETRATIONS
Flash all exterior wall penetrations including doors, windows, vents, etc., in accordance with manufacturer's instructions to create a watertight barrier. As a minimum, install "Sisalkraft" flashing, shingle-fashion at all penetrations with a bead of butyl-based caulk, and 'z'-flash all head conditions with sheet metal flashing as required for a weathertight barrier.

ROOF VALLEY FLASHING
26 gauge galvanized iron minimum, pre-primed with rust-inhibitive primer. Extend 11"minimum each way from valley centerline with a 1" high integral splash diverter rib at the flow line. Headlap valley flashing sections 4" minimum and underlay with 36" wide continuous building felt, type 30, for full length of valley.

DIVISION 2 - SITEWORK

SOIL INVESTIGATION REPORT
The Soils Investigation and Geotechnical Reports specifically prepared for this project are considered to be part of these Construction Documents , two (2) copies of which will be supplied to the Contractor. The Contractor shall make himself familiar with all of the Soils Investigation Report requirements and recommendations, and take all the necessary measures for a correct and complete implementation of such requirements, in the field. All requirements and recommendations contained therein shall be fully met and complied with. A final inspection and report is required to be provided by the Soils Engineer to the appropriate municipality.

SITE PREPARATION AND EARTHWORK
Building site location shall be clear and grubbed of all planting materials, brush, debris, etc., within five (5) feet of new building structure, as directed by Soils Engineer. Remove encroaching trees and tree root system to twelve (12) inches below finish grade, backfill and compact according to the Soils Engineer's recommandations. Excavate earthwork as required to accept new building structure to include foundation systems, concrete slab-on-grade subgrades and utulity trenches.

EXCAVATION AND SHORING
Contractor shall be solely responsible for all excavation procedures, provision of and the design of all shoring, lagging, bracing, etc., and enforcing safety precautions as required for the protection of life and limb, Owner's property and structures, adjacent property and structures, streets and utilities during the period of construction.

FOOTING EXCAVATION
All footings shall be trenched to Structural Drawings and outlined in the Structural Specifications and Soils Investigation Report. Intersections, corners and trench bottoms shall be hand excavated to provide sharp corners and to insure foundations that are square, true, plumb and level as required.

UNDERGROUND RAINWATER DRAINAGE SYSTEM
Non-perforated, corrugated polyethylene tubing drainage system, shall be designed specified and installed by the subcontractor with all necessary fittings as required for a properly functioning system. All applicable codes, jurisdictional requirements and generally accepted standards of good construction practice regarding the system design, specifications, installation and operation shall be met or exceeded. All soil cover to be compacted, with 12" minimum cover, and 24" at vehicular traffic locations. Provide 1/8" per foot minimum slope to catch basin. All products are to be from one manufacturer. This system is optional, upon Owners approval, use Concrete splash blocks as a min. See Civil Specifications for additional information.

BACKFILLING
Backfilling materials at exterior perimeter walls shall not be placed until after exterior perimeter walls are supported by the completion of the interior floor structural systems. All backfill materials including those at utility trenches, shall be mechanically compacted in layers to the approval of the Soils Engineer. Compaction by flooding is specifically not permitted.

SLOPING
The ground immediately adjacent to the foundation shall be sloped away from building at a slope of not less than 6" (5 percent slope) in the first 10 feet measured perpendicular to the face of the wall. Impervious surfaces within 10 feet of building shall be sloped a minimum of 2 percent away from building per CRC 401.3
The slope of the garage floor to the main vehicle floor shall drain all spills per CRC R309.1

DIVISION 3 - CONCRETE

GENERAL INSTRUCTIONS
•Concrete for slabs on ground, beam footings or piers shall have a minimum compressive strengh of 2,500 PSI at 28 days, unless noted otherwise on plans.
•Maximum aggregate size shall be 3/4" and maximum slump shall be 4 1/2"
•Anchor bolts, hold-down bolts, dowels, and other required inserts shall be positioned and firmly secured in place before concrete is poured.
•The Contractor shall take all the necessary measures to provide a proper compaction of the concrete.
•The excavated bottom of all footings shall be oriented as shown on details and the footings shall be poured in neat excavations, without side forms if possible.
•Approximately 3 ounces per sack of cement of Pozzolith 300R or approved equal shall be used as a water dispersing additive. At contractor's option, an air entraining agent conforming to the latest revision of astm specification C 260 may be added to the concrete to provide specified amounts of entrained air.

REINFORCING STEEL
Reinforcing Steel shall be deformed bars, conforming to ASTM A615-40 requirements and welded wire mesh, per ASTM SPECIFICATION A-185. Bars No. 4 and smaller shall be of grade 40, and Bars No.5 and larger shall be of grade 60. All reinforcing bars shall be clean of any rust or foreign materials. All reinforcing splices shall be lapped a minimum of 30 bar diameters, but not less than 24".

Concrete coverage for reinforcement shall be :
3" where poured against earth;
2" where poured against forms;
1" for slabs poured against forms.

DIVISION 4 - MASONRY

GENERAL INSTRUCTIONS
•All necessary work shall be reinforced grouted masonry and conform to the 2007 Uniform Building Code and shall be 8"*8"*16" lightweight units with maximum linear shrinkage of 0.06%, per ASTM (C-90-52),Grade A. No continuous inspection is required.
•Mortar mix shall be composed of one part Portland Cement to not more than three parts sand. Grout mix shall be composed of one part Portland Cement to not more than three parts sand and not less than two pea gravel.
•Walls to be grouted in 4'-0" maximum lifts, unless high lift grout procedures (with blockouts) are used. All reinforcing shall have a minimum coverage of 1/2" of grout. All bolts shall have be provided with an approved moisture barrier on the dirt side.

DIVISION 5 - METALS

GENERAL INSTRUCTIONS
•Structural steel shall conform to ASTM (A-36) specifications and to the AISC specifications for fabrication and erection.
•All bolts shall conform to ASTM (A-307) for unfinished bolts.
•All bolt holes in steel members shall be true. Burning of holes for connections will not be permitted.
•Provide full bearing on unthreaded portion of bolt shank for all steel connections.
•Provide level bolts for all bolts at beam seats and column base plates.
•All nuts for structural steel connections shall be heavy hexagonal nuts.
•All welding shall be as indicated on the details and performed in a qualified shop, under continuous inspection per U.B.C 306. Field welding, other than miscellaneous tack welding, is not permitted, unless otherwise noted in the details.

ABBREVIATIONS

A.F.F.	ABOVE FINISHED FLOOR
AB	ANCHOR BOLT
ABV.	ABOVE
AC	AIR CONDITIONING
ADJ.	ADJUSTABLE
ALUM.	ALUMINUM
ASPH.	ASPHALT
B.O.	BOTTOM OF
B.U.R.	BUILT-UP ROOFING
BD	BOARD
BLDG.	BUILDING
BLKG.	BLOCKING
BLW.	BELOW
BM.	BEAM
BRZ.	BRONZE
BTW.	BETWEEN
C.I.	CAST IRON
C.I.P.	CAST IN PIPE
C.O.	CLEAN OUT
CAB.	CABINET
CL	CENTER LINE
CLG.	CEILING
CLO.	CLOSET
CLR.	CLEAR
CMU	CONCRETE MASONRY UNIT
COL.	COLUMN
CONC.	CONCRETE
CONT.	CONTINUOUS
CSK.	COUNTERSINK
CSMT.	CASEMENT
CTR.	CENTER
CW	COLD WATER
DF	DOUGLAS FIR
DH	DOUBLE HUNG
DIA.	DIAMETER
DIM.	DIMENSION
DISP.	GARBAGE DISPOSAL
DN.	DOWN
DR.	DOOR
DTL.	DETAIL
DW	DISHWASHER
DWG.	DRAWING
DWR.	DRAWER
(E)	EXISTING
EA.	EACH
EL.	ELEVATION
ELEV.	ELEVATOR (OR ELEVATION)
EQ	EQUAL
EXP.	EXPOSED
EXT.	EXTERIOR
F.G.	FINISHED GRADE/FIXED GLASS
F.O.C.	FACE OF CONCRETE
F.O.F.	FACE OF FINISH
F.O.S.	FACE OF STUD
FD	FLOOR DRAIN
FDN.	FOUNDATION
FIN.	FINISH
FLR.	FLOOR
FRPR.	FIREPROOFING
FTG.	FOOTING
G.I.	GALVANIZED IRON
G.W.B.	GYPSUM WALLBOARD
GA.	GAUGE
GL.	GLASS
H.C.	HOLLOW CORE
H.W.	HOT WATER
HB	HOSEBIB
HDR.	HEADER
HOR.	HORIZONTAL
HT	HEIGHT
HTR.	HEATER
I.D.	INSIDE DIAMETER
I.D.	INSIDE DIMENSION
INS.	INSULATION
INT.	INTERIOR
J.H.	JOIST HANGER
JB	JUNCTION BOX
JST.	JOIST
JT	JOINT
K.D.	KILD DRIED
L.H.	LEFT HAND
LAV.	LAVATORY
LT.	LIGHT
MAX.	MAXIMUM
MED.	MEDIUM
MFR.	MANUFACTURER
MIN.	MINIMUM
MIR.	MIRROR
MTD.	MOUNTED
MTL.	METAL
(N)	NEW
N.T.S.	NOT TO SCALE
NIC	NOT IN CONTRACT
O/	OVER
OC	ON CENTER
OPG.	OPENING
P.T.	PRESSURE TREATED
PL.	PLATE
PLAM.	PLASTIC LAMINATE
PLYWD.	PLYWOOD
PNL	PANEL
PR.	PAIR
PTD.	PAINTED
R	RISER
R.H.	RIGHT HAND
R.O.	ROUGH OPENING
R.W.L.	RAIN WATER LEADER
RAD. / R.	RADIUS
REINF.	REINFORCED
REQ'D	REQUIRED
RESIL.	RESILIENT
RM.	ROOM
RWD.	REDWOOD
S.A.D.	SEE ARCHITECTURAL DRAWINGS
S.C.	SOLID CORE
S.C.D.	SEE CIVIL DRAWINGS
S.L.D.	SEE LANDSCAPE DRAWINGS
S.P.	SOLID PIPE
S.S.	STAINLESS STEEL
S.S.D.	SEE STRUCTURAL DRAWINGS
S.T.	STEEL TROWEL
SH.	SHELF
SHR.	SHOWER
SIM.	SIMILAR
SPK.	SPEAKER
STL.	STEEL
STN.	STAIN
T&G	TONGUE & GROOVE
T.	TREAD
T.O.	TOP OF
T.O.C.	TOP OF CONCRETE
T.O.P.	TOP OF PLATE
T.O.S.	TOP OF STEEL / SLAB
T.O.W.	TOP OF WALL
T.P.H.	TOILET PAPER HOLDER
T.S.	TUBE STEEL
THK.	THICKNESS
TYP.	TYPICAL
U.O.N.	UNLESS OTHERWISE NOTED
V.I.F.	VERIFY IN FIELD
V.T.R.	VENT THROUGH ROOF
VP	VENT PIPE
W.O.	WHERE OCCURS
W.P.	WATERPROOFING
W.S.	WEATHER STRIPPING
W/	WITH
WC	WATER CLOSET
WD.	WOOD
WDW.	WINDOW
WH	WATER HEATER

DIVISION 1 - GENERAL REQUIREMENTS

GENERAL INSTRUCTIONS
•The following specifications shall conform to the #### California Building Code and any other City/Town ordinances which are in force at the time of this project.
•The contractor shall verify all dimensions, elevations and conditions, prior to starting any field work.
•Any deviation called for by field conditions, or any conditions different from those indicated on the plans shall be brought to the Architect's attention prior to any Work.
•Typical details shall apply where no specific details or sections are provided.
•Dimensions shown on plans or details take precedence over scales shown.
•The contractor shall be responsible for the satisfactory completion of all work in accordance with the project plans and specifications.

SUBMITTALS AND SHOP DRAWINGS
Contractor shall submit to the Architect, five (5) sets of documentation for Products intended for use on this project where Submittals or Shop Drawings are required or otherwise necessary, for the Architect's approval, prior to fabrication.

REQUIRED PERMITS
The Contractor will be responsible to pay for and secure all Building and Trade Permits reqiured by the Jurisdiction, to complete the work.

PRODUCT SUBSTITUTIONS
All products will be provided as specified with the singular exception of products allowed as "OR APPROVED EQUAL" (O.A.E.) Substitued products will be pre-approved in writing, only by the Architect prior to installation. Verbal approvals are specifically prohibited. No other substitutions will be allowed, therefore the Contractor will assume full responsibility for all products provided and/or installed but not specified.
Contractor shall supply Architect with two (2) sets of manufacturer's literature and product samples for any products to be considered for substitution, Contractor will be notified in writting any acceptable product substitutions.

PROJECT MEETINGS
Architect will remain available to Contractor on an as-needed basis, by pre-arranged agreement with the Owner, throughout the period of construction. Contractor will notify and request the Architect to observe the conformance of the Work to the intent of the Contract Documents prior to arranging for jurisdiction-required inspections. Architect will inspect the Work to determine the dates of "Substantial Completion" and "final Approval" as requested by Contractor and pre-approved by Owner.

ERRORS AND OMISSIONS
Errors discrepancies and omissions which may occur in Contract Documents shall be brought to the attention of the Architect in writting and written clarifications shall be obtained before proceeding with the Work. The Contractor will be held fully responsible for the results of any errors, discrepancies, or omissions of which the Contractor failed to notify the Architect before construction and/or fabrication of the Work.

THESE DRAWINGS ARE THE ORIGINAL UNPUBLISHED WORK OF THE ARCHITECT AND MAY NOT BE USED OR DISCLOSED WITHOUT THE WRITTEN PERMISSION OF THE ARCHITECT.
©2018 MODERN HOUSE

MODERN HOUSE
ARCHITECTURE & DESIGN
1265 Indiana Street
San Francisco Ca. 94107
P. 415.800.8520
C. 415.596.7281
modernhouse@mac.com
www.modernhousearchitects.com

LICENSED ARCHITECT CURTIS C. CLINE C26383 6.30.21 RENEWAL DATE STATE OF CALIFORNIA

Curt Cline Architect

BUILDING PERMIT REVIEW
029-35-005
PANGAN RESIDENCE
AUGUSTA CT
MILPITAS, CA

Revisions:
1 BUILDING COMMENTS 11/29/2018

SPECIFICATIONS

SCALE : AS NOTED
DATE : 07.26.2018
SHEET : A0.5

Georgia-Pacific

DensDeck®
Prime Roof Board

Technical Service Hotline 1.800.225.6119 or
www.densdeck.com

Manufacturer
Georgia-Pacific Gypsum LLC
133 Peachtree Street
Atlanta, GA 30303

Georgia-Pacific Canada LP
7070 Mississauga Road, Unit 120
Mississauga, ON L5M 7V9

Technical Service Hotline: 1-800-225-6119

Description
DensDeck® Prime Roof Board is an exceptional fire barrier, thermal barrier and recovery board used in various commercial roofing systems. The product features a pre-primed surface to make the bond even stronger. The DensDeck design employs fiberglass mats front and back that are embedded into a gypsum core, providing excellent fire resistance and wind uplift properties. The unique construction of DensDeck Prime Roof Board provides superior flute spanning and will help stiffen and stabilize the roof deck. Additionally, DensDeck Prime Roof Board has been shown to withstand delamination, deterioration and jobsite damage more effectively than roofing membrane substrates such as paper-faced gypsum board, fiberboard and perlite insulation. DensDeck Prime Roof Board is resistant to the growth of mold when tested as manufactured, per ASTM D 3273.

Primary Uses
Roof system manufacturers and designers have found DensDeck Prime Roof Board to be compatible with many types of roofing systems, including: modified asphalt, single-ply, metal systems, recover board, as well as an overlayment for polyisocyanurate and polystyrene insulation. DensDeck Prime Roof Board can also be used as a form board for poured gypsum concrete deck in roof applications as well as a substrate for spray foam roofing systems. 1/2" (12.7 mm) and 5/8" (15.9 mm) DensDeck Prime Roof Board may also be used in vertical applications as a backer board or liner for the roof side of parapet walls.

DensDeck Prime Roof Board may allow the bonding of cold mastic modified bitumen and torching directly to the surface. ***Consult with the system manufacturer for recommendations on this application.***

DensDeck Prime Roof Board is the preferred substrate for vapor retarders.

Standards and Code Approvals
DensDeck Prime Roof Boards are manufactured to meet ASTM C 1177 and have the following approvals:
- Florida Product Approval Code FL 1250
- Miami-Dade County, Florida NOA 08-0908.10

Recommendations and Limitations
DensDeck Prime Roof Boards are manufactured to act with a properly designed roof system following good roofing practices. The actual use of DensDeck Prime Roof Board as a roofing component in any system or assembly is the responsibility of the roofing system's design authority. Consult with the appropriate system manufacturer and/or design authority for system and assembly specifications and instructions on applying other products to DensDeck Prime Roof Board. Georgia-Pacific does not warrant and is not responsible for any systems or assemblies utilizing DensDeck Prime Roof Board or any component in such systems or assemblies other than DensDeck Prime Roof Board.

The need for a separator sheet between the DensDeck Prime Roof Board and the roofing membrane must be determined by the roof membrane manufacturer or roofing system designer.

Confirm any priming requirements with the membrane manufacturer. When applying solvent-based adhesives or primers, allow sufficient time for the solvent to flash off to avoid damage to roofing components.

DensDeck Prime Roof Boards should not be subjected to abnormal or excessive loads or foot traffic, such as, but not limited to, use on plaza decks or under steel-wheeled equipment that may fracture or damage the panels. Provide suitable roofing system protection when required.

When using DensDeck Prime Roof Boards for hot-mopped applications, Georgia-Pacific recommends maximum asphalt application temperatures for Type III asphalt of 425°F (218°C) to 450°F (232°C). Application temperatures above these recommended temperatures may adversely affect roof system performance. For application temperatures in excess of 450°F (232°C) and for mopping of type IV asphalt, ribbon or spot mopping or the installation of a perforated base sheet are recommended methods of bonding asphalt in lieu of full mopping. Consult and follow the roofing system manufacturer's specifications for full mopping applications and temperature requirements.

When using DensDeck Prime Roof Board as a substrate for torch applications, ensure that the product is dry and that the proper torching technique is used. Limit the heat to the DensDeck Prime Roof Board. Maintain a majority of the torch flame directly on the roll.

Conditions beyond the control of Georgia-Pacific, such as weather conditions, dew, leaks, application temperatures and techniques may cause adverse effects with roofing systems.

Moisture Management
DensDeck Prime Roof Boards, like other components used in roofing systems, must be protected from exposure to moisture before, during and after installation.

Remove the plastic packaging from all DensDeck Prime Roof Board immediately upon receipt of delivery. Failure to remove the plastic packaging may result in entrapment of condensation or moisture. DensDeck Prime Roof Board stored outside must be stored level and off the ground and protected by a breathable waterproof covering. Provide means for air circulation around and under stored bundles of DensDeck Prime Roof Board. DensDeck Prime Roof Board must be covered the same day as installed.

Avoid application of DensDeck Prime Roof Boards during rain, heavy fog and any other conditions that may deposit moisture on the surface, and avoid the overuse of non-vented, direct-fired heaters during winter months. When roofing systems are installed on new poured concrete or light weight concrete decks or when re-roofing over a wet existing concrete deck, a venting base sheet or vapor retarder should be installed above the concrete to retard the migration of water from the concrete into the roof assembly. Always consult the roofing system manufacturer or design authority for specific instructions for applying other products to DensDeck Prime Roof Boards.

Moisture vapor movement by convection must be eliminated, and the flow of water by gravity through imperfections in the roof system must be controlled. After a leak has occurred, no condensation on the upper surface of the system should be tolerated, and the water introduced by the leak must be dissipated to the building interior in a minimum amount of time.

Although DensDeck Prime Roof Boards are engineered with fiberglass facings and high density gypsum cores, the presence of free moisture can have a detrimental effect on the performance of the product and the installation of roofing membranes. For example, hot asphalt applications can blister; torched modified bitumen may not properly bond; and adhesives for single ply membranes may not dry properly. Moisture accumulation may also significantly decrease wind uplift and vertical pull resistance in the system or assembly. DensDeck Prime Roof Boards containing excessive free moisture content may need to be evaluated for structural stability to assure wind uplift performance.

Fire Resistance Classifications
DensDeck Prime Roof Boards are excellent fire barriers over combustible and noncombustible roof decks, including steel decks.

Physical Properties

Properties	1/4" (6.4 mm)
Thickness, nominal	1/4" (6.4 mm) + 1/16" (1.6 mm)
Width, standard	4' (1219 mm) ± 1/8" (3 mm)
Length, standard	4' (1219 mm) and 8' (2438 mm) ± 1/4" (6.4 mm)
Weight, nominal, lbs./sq. ft. (Kg/m²)	1.2 (5.9)
Surfacing	Fiberglass mat with non-asphaltic coating
Flexural Strength[1], parallel, lbf. min. (N)	40 (178)
Flute Spanability[2]	2-5/8" (66.7 mm)
Permeance[3], Perms (ng/Pa•S•m²)	>50 (>2850)
R Value[4], ft²•°F•hr/BTU (m²•K/W)	.28
Linear Variation with Change in Temp., in/in °F (mm/mm/C°)	8.5 x 10⁻⁶ (15.3 x 10⁻⁶)
Linear Variation with Change in Moisture	6.25 x 10⁻⁶
Water Absorption[5], % max	10.0
Compressive Strength[6], psi nominal	900
Surface Water Absorption, grams, nominal	≤2.0
Flame Spread, Smoke Developed (ASTM E 84)	0/0
Bending Radius	5' (1524 mm)

DENS DECK ROOF BOARD
UL LISTING #: R15206 ** NOT EXPOSED TO OUTSIDE

Duro-Guard® ISO Insulation

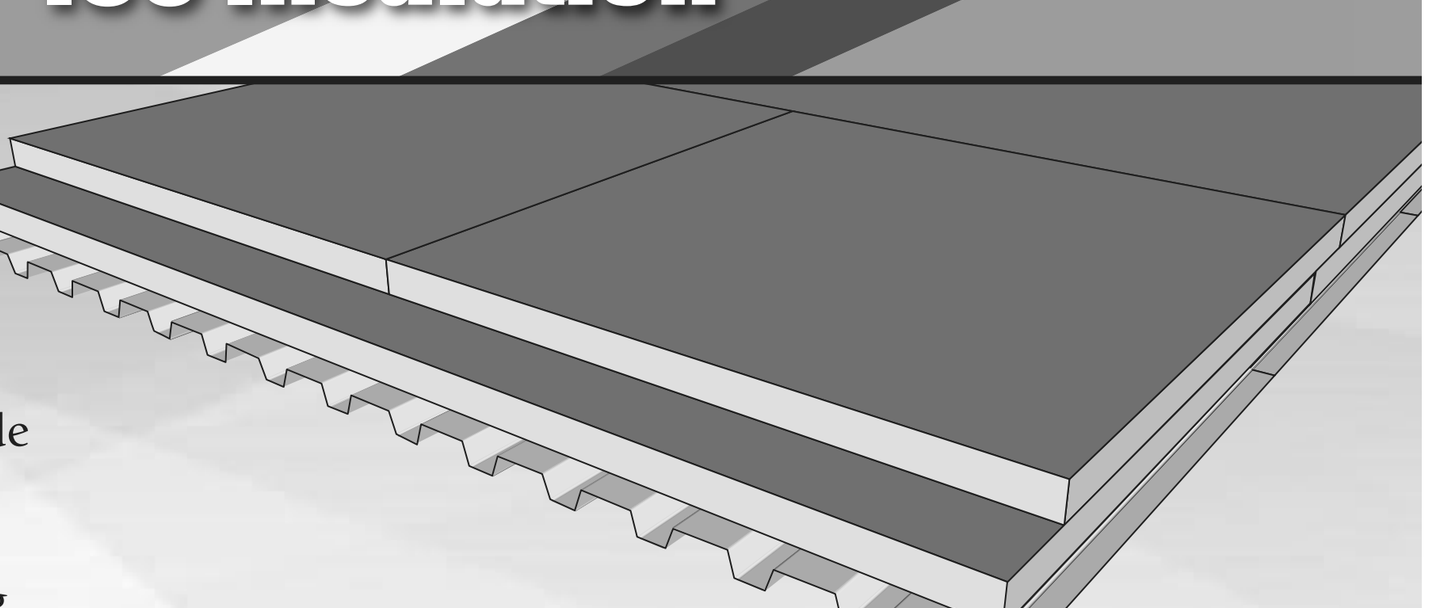

PRODUCTS

Duro-Guard ISO II
- Rigid roof insulation panel composed of a closed cell polyisocyanurate foam core bonded on-line on each side to fiber reinforced facers.
- Ideal for controlling costs in typical insulated systems.
- Applications include single-ply roofing systems, standing seam metal roof systems, modified bitumen systems, and BUR.
- Provides R-values from 5.7 to 26.8.
- Available in flat or tapered panels.

Duro-Guard ISO III CG
- Rigid roof insulation panel composed of a closed cell polyisocyanurate foam core laminated on-line to a premium performance coated glass facer.
- Offers excellent fire and mold resistance.
- Applications include single-ply roofing systems, modified bitumen systems, BUR, and coal-tar.
- Provides R-values from 5.7 to 26.8.
- Available in flat or tapered panels.

Duro-Guard ISO HD
- ½″ thick high density polyisocyanurate insulation panel specifically designed for use as a cover board; manufactured on-line using premium performance coated glass facers.
- Ideal for use as an insulation cover board or recover board in reroofing applications.
- Applications include single-ply roofing systems and modified bitumen systems.
- Delivers an R-value of 2.5, significantly higher than roof cover boards made with other materials such as wood-fiber or gypsum.
- Sturdy construction and durability protects the roof system from effects of hail, roof top construction traffic and other potentially damaging elements.

Duro-Guard ISO HD Composite
- ½″ thick high density polyisocyanurate cover board laminated during the manufacturing process to Duro-Guard ISO III CG rigid polyiso roof insulation.
- Eliminates the need for a cover board.
- Applications include single-ply roofing systems, modified bitumen systems, and BUR.
- Ideal for commercial roofing projects that require high thermal efficiency combined with maximum durability.
- Provides R-values from 11.1 to 23.0.

Duro-Guard ISO Flat - HP
- Rigid roof insulation panel composed of a closed cell polyisocyanurate foam core laminated to heavy, durable, and dimensionally stable coated-glass facers.
- Ideal for fully adhered applications requiring enhanced wind uplift, fire, and mold resistance.
- Applications include single-ply roofing systems, modified bitumen systems, and BUR.
- Provides R-values values from 5.7 to 26.8.
- Available in flat or tapered panels.

Duro-Guard ISO NB
- Rigid roof insulation panel composed of a closed cell polyisocyanurate foam core bonded during the manufacturing process to fiber reinforced facers on one side and oriented strand board (OSB) or plywood on the other side.
- Applications include single-ply roofing systems, standing seam metal roof systems, and heavyweight shingles.
- Provides R-values from 6.3 to 24.2.
- Substrate types:
  - 7/16″ or 5/8″ OSB
  - 5/8″ or 3/4″ plywood

Duro-Guard ISO Foil
- Rigid roof insulation panel composed of a closed cell polyisocyanurate foam core bonded on-line to an impermeable foil facing.
- Ideal for areas where moisture drive may be present.
- Applications include ballasted and mechanically attached single-ply roofing systems.
- Provides R-values from 6.7 to 31.2.
- Available in flat or tapered panels.

DURO-GUARD ISO RIGID INSULATION (ISO II)
UL LISTING #: R10128 ** NOT EXPOSED TO OUTSIDE

Product Design
AirTight™ OC is an **Open-Cell** spray applied foam, which when installed following application guidelines adheres tenaciously to framing members and substrates. **AirTight™ OC** provides superior energy economy and durability while significantly reducing unmanaged moisture and air infiltration.

Product Use
AirTight™ OC forms a completely sealed air barrier in wall cavities and can be used to fill 2" x 6" stud wall construction in a single application. Its performance is superior to commonly used fiber-glass batt or blown-in insulation. It adheres well to most building materials and will provide a continuous barrier against air infiltration for the life of the building. As a component of a "systems" approach to proper building envelope construction in both residential and commercial construction, **AirTight™ OC** provides exceptional performance in reducing heat transfer.

TYPE : I, II, III, IV, V (A&B) Construction

Recommended Product Applications
- Walls
- Floors
- Ceilings
- Attics
- Crawl Spaces
- Vaulted or Cathedral Ceilings

Recommended Processing

Processing Designation	Regular
Ambient Temperature	50-120°F

Optimum hose pressure and temperature may vary as a function of the type of equipment, ambient and substrate conditions, and the specific application. It is the responsibility of the applicator to properly interpret equipment technical literature, particularly information that relates acceptable combinations of gun chamber size, proportioner output, and material pressures.

Processing Designation	AirTight™ OC
Equipment Dynamic Pressure	1,100 - 1,500 psi
Preheat Temperature	110 – 135 °F (43 – 57°C)
Hose Heat Temperature	110 – 135 °F (43 – 57 °C)
Drum Storage Temperature	65 - 85 °F (18 - 29° C)

Material shelf life: 3 months when stored within recommended temperature range.

- 2:1 transfer pumps are recommended for material transfer from container to the proportioner.

- CAUTION: Extreme care must be taken when removing and reinstalling drum transfer pumps so as NOT to reverse the "A" and "B" components.

- Do not circulate or mix other suppliers' "A" or "B" component into **AirTight™** containers.

- The plural component proportioner must be capable of supplying each component within ± 2% of the desired 1:1 mixing ratio by volume.

Physical Properties

Properties	Test Method/ Requirements	Value
Aged "R" Value	ASTM C518	3.9 per inch
Core Density	ASTM D1622	.4-.6 lbs./ft3
Open-Cell Content	ASTM D2856	>94%
Tensile Strength	ASTM D1623	3 psi
Air Permeance	ASTM E283-04	< 0.02L/s/M² at 4.5 inches
Dimensional Stability: 28 days at 160°F, 100%RH	ASTM D2126 15% max by volume change	3%
Sound Transmission	ASTM E413-2004	Sound Transmission Class 41
	ASTM E1332-90	Indoor-Outdoor Transmission Class 30
	ASTM C423-02a	Noise Reduction Coefficient 0.10
Moisture Vapor Transmission	ASTM E-96	1" - 22 Perms; 2" - 15 Perms
Flammability	ASTM E970 / >0.12	.19
Flammability	NFPA 259	1812 BTU / ft²; 20.6 MJ / m²

Credentials/Certifications
•ICC ESR-2847

AirTight™ OC is a **Class I** formulation, as Tested per ASTM E84, and possess the flammability characteristics shown: (UL 723, NFPA 255, UBC 8-1)

ASTM Method E84	Class I
Flame Spread	≤25
Smoke Development	≤450

ASTM E-1354	PASSED

ASTM E-119	1 Hour Non Load Bearing Wall - Wood or Steel
	2 Hour Non Load Bearing Wall - Wood

Room Corner Fire Testing*

*NFPA 286	
Location	**SPF Thickness ***
Wall and Ceilings	Up to 12 in (305 mm)
***Diversified Modified NFPA 286 Per Appendix X**	
Walls	Up to 6.25 in
Ceilings	Up to 10.00 in



AIRTIGHT SPRAY FOAM INSULATION
STATE FIRE MARSHALL APPROVED LISTING #: 2440-1705:0101

NOTES - SPECIFICATIONS

- Listing numbers of materials under the official State Fire Marshall's Wildland Urban Interface Product List are provided under product title

- Materials and material assemblies provided to meet compliance with CRC 327 must be approved or listed by the State Fire Marshal or by a testing and/or inspection agency that is approved by the State Fire Marshal per CRC 327.3

QUEST
CONSTRUCTION PRODUCTS

PremiumCoat® System
Technical Data Sheet

HYDROSTOP

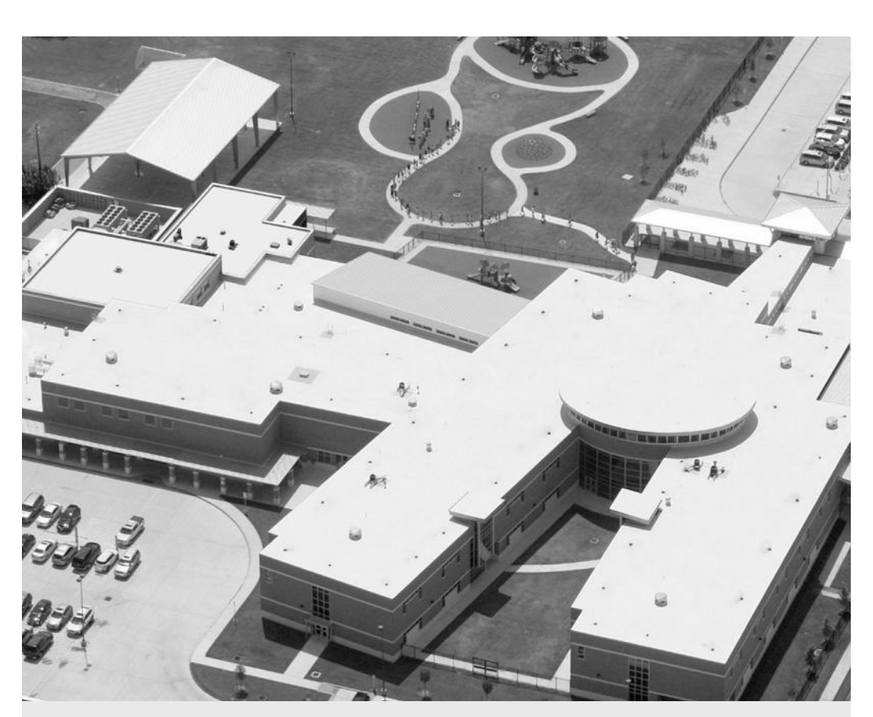

PRODUCT DESCRIPTION

The **PremiumCoat® System** is a liquid-applied, water-based sustainable roofing and waterproofing solution for coating, recover, reroof and new roof applications. It provides a fully-adhered, adhesively attached, breathable acrylic membrane and a complete roof cover.

WARRANTY

Properly installed and inspected, the **PremiumCoat® System** qualifies for 15-year Standard warranties and 15-, 20-, and 25-year System warranties which, under proper maintenance and recoat schedules, can be extended for the *life* of the building.

PACKAGING & SHELF LIFE

The **PremiumCoat® System** is comprised of the following components: **PremiumCoat® FoundationCoat**, **PremiumCoat® Fabric**, and **PremiumCoat® FinishCoat**.

For packaging information, please refer to individual product Technical Data Sheets.

QCP Roofing Systems

May 2014, supercedes April 2011

BASIC USES & ADVANTAGES

Basic Uses:
- Metal (historic or commercial) roof waterproofing and cooling
- Flat and low-pitched roof waterproofing, including BUR, concrete (structural or LW), EPDM, Hypalon, modified bitumen, PVC, and TPO
- Parapet wall waterproofing
- Exterior wall waterproofing
- Flashing of all types

The acrylic membrane forms a permanently flexible, highly U.V. resistant chemical resistant elastomeric compound. It is fully reinforced with a tough stitch-bonded polyester fabric which has been designed for roofing and flashing applications of all types. **PremiumCoat®** is easy to apply, safe to work with, and requires no special equipment.

Advantages:
- **PremiumCoat®** is a Factory Mutual 4470 Class 1 Liquid Applied Roof Cover and meets all aspects of the International Building Code criteria as roof cover for the IBC, as well as the IgCC, and the IECC
- Uses only quality materials as certified by ASTM and ISO standards and is manufactured in QCP's ISO 9001:2008 certified factories.
- Quality assurance is further supported by regional technical field representatives, field inspections, and certified applicator training
- Ultraviolet and heat-resistant for added durability
- Highly reflective FinishCoat layers reduce heat and lower energy costs
- Excellent adhesion holds substrate in place even in hurricane force winds

PHYSICAL PROPERTIES

PREMIUMCOAT® SYSTEM	
Wind Driven Rain	Pass 0.0 lbs weight gain [TT-C-555B/D6904]
Elongation of Membrane (40 mils DFT)	MD: 36% @ 8,000 hrs weathering CD: 41% @ 8,000 hrs weathering [ASTM D4798 (G155) and D2370]
Tensile Strength of Membrane (40 mils DFT)	MD: 65lbs/in-width @ 8,000 hrs weathering, CD: 69lbs/in-width @ 8,000 hrs weathering [ASTM D4798 (G155) and D2370]
Tensile Strength of Membrane (40 mils DFT)	2210 PSI (13,789 kPa) [ASTM D412]
Water Vapor Permeability (40 mils DFT)	3–5 perms A Class III vapor retarder [ASTM E96]
Salt Spray	No effects [ASTM B117]
Algae Resistance	Orating [ASTM G29]
Drying Time	(Touch dry) 1–4 hours at 77°F @ 40% RH
Full Cure	7 days
Solar Reflectance	(white) 79% initial, 70% aged
Thermal Emittance	(white) 0.90 initial, 0.90 aged
SRI	(white) 99 initial, 86 aged

Exterior Fire	Class A up to 4"/12" slope [ASTM E108/UL790]
Interior Fire	Class 1 [FM 4470 Calorimeter]
Wind Uplift	Concrete: 6,089 psf LWIC: 4,621 psf Polyisocyanurate (ISO): 1,189 psf Smooth BUR: 2,261 psf Granulated Cap Sheet: 1,753 psf [FM 4470/4474, TAS 114 D/J, TAS 125]
Impact/Durability	Pass [FM 4470 Foot Traffic]
Leakage	Pass a free-standing membrane [FM 4470 ASTM D7281]
Hail	Pass – Severe [FM 4470 Hail]
Weathering (40 mils DFT)	Pass, maintained over 90% tensile strength after 8,000 hours Xenon-Acr. [ASTM D4798 (G155), D2370]
Typical Service Limits	-30°F to 200°F (-37°C to 93°C)
ASTM Material Properties	Pass [ASTM D6083]
Cured Weight	0.33 lbs per ft² (56.8 ounces per m²)

For specific physical property information on PremiumCoat® FoundationCoat, Fabric, and FinishCoat components, please refer to individual product Technical Data Sheets.

continued on back

PremiumCoat® System
Technical Data Sheet

QUEST
CONSTRUCTION PRODUCTS

APPROVALS	
ASTM D-6083	Tested and approved
California Title 24	PremiumCoat® System meets all Title 24 requirements
CRRC (Cool Roof Rating Council coolroofs.org	*PremiumCoat® FinishCoat White* Initial Solar Reflectance 0.79; Initial Thermal Emittance 0.90; Initial SRI 99; Product ID 0614-0039. *PremiumCoat® FinishCoat Cotton* Initial Solar Reflectance 0.71; Initial Thermal Emittance 0.90; Initial SRI 87; Product ID 0614-0040. *PremiumCoat® FinishCoat High Reflectant Plus Bright White* Initial Solar Reflectance 0.92; Initial Thermal Emittance 0.86; Initial SRI 117; Product ID 0614-0042
Department of Energy, ENERGY STAR®	Approved: PremiumCoat® FinishCoat white & cotton
Factory Mutual FM4470 / 4474	Class 1 Roof Cover and Recover System over most roofing substrates. Standard for Class 1 Spread of Flame, Windstorm Pressure, Windstorm Pull, Hail Damage, Resistance to Foot Traffic, and Susceptibility to Leakage Classifications. Report J.I. 3000150 various assemblies.
Florida Dept of Codes floridabuilding.org	Acceptance # - FL6623-R1
GSA (U.S. General Services Admin)	Contract Number GS-07F-5988R Special Item Number- 563-4
Miami-Dade County NOAs miamidade.gov	10-0720.04, 11-0531.07 13-0204.15, 13-0204.16 13-0204.17, 13-0204.18
OTC (Ozone Transport Commission)	PremiumCoat® meets and exceeds the requirements for the OTC.

FM APPROVED · MIAMI-DADE COUNTY APPROVED · CRRC COOL ROOF RATING COUNCIL · LEARN MORE AT energystar.gov

APPLICATION INSTRUCTIONS

Refer to QCP **PremiumCoat® System** specifications regarding surface preparation, cleaning, priming instructions, application information, coverage rates, and minimum membrane mil thickness required.

SUBSTRATE	SURFACE PREPARATION / PRIMING: BarrierGuard Slurry	CleanAct Primer	SP Primer	StableRust Primer	SureBond Primer	UniBase Primer
BUR						X
Concrete, structural	X				X	
Concrete, LW	X				X	
EPDM		X				
Hypalon						
ISO Board						
Metal				X		
APP Mod Bit						X
SBS Mod Bit						X
PVC			X			
Cover Board						
TPO			X			

General Coverate Rate & Application Information: PremiumCoat® FoundationCoat & Fabric components: this procedure consists of one coat of **PremiumCoat® FoundationCoat** ("**FoundationCoat**") applied to the substrate at the rate of 50 to 80 ft²/gallon (1.2 to 2 m²/liter), **PremiumCoat® Fabric** ("**Fabric**") (sizes vary) laid into the wet **FoundationCoat**, and a second coat of **FoundationCoat** immediately applied over the top at the rate of 50 to 80 ft²/gallon (1.2 to 2.0 m²/liter) to saturate the **Fabric**. **FoundationCoat** is applied at a total rate of 25 to 40 ft²/gallon (.6 to 1.0 m²/liter), depending on the texture and porosity of the substrate. **FoundationCoat** should only be applied using approved roof brushes. Rolling and/or spraying **FoundationCoat** is strictly prohibited.

Apply specified number of coats of **PremiumCoat® FinishCoat** ("**FinishCoat**") by brush, roller, or airless sprayer. Each **FinishCoat** shall be applied at 120-140 ft²/gal (2.95-3.43 m²/liter). Minimum milage requirements are 11.5-13.4 (292-340 microns) wet and 6.1-7.2 mils (154-182 microns) dry per coat. Allow to dry between coats. Total **FinishCoat** dry film thickness should be 12.2-14.4 mils (309-365 microns). See **PremiumCoat® System** specification for finished membrane mil thickness values.

LIMITATIONS & PRECAUTIONS

PremiumCoat® System liquid components will freeze and become unusable below 32°F (0°C). Do not ship or store unless protection from freezing is available. Do not apply if conditions will not permit complete cure before rain, dew or freezing temperatures occur. Do not apply **PremiumCoat® System** at temperatures below 50°F (10°C), or when there is a possibility of temperatures falling below 32°F (0°C) within 2 hours of application.

SAFETY & HANDLING

For specific information regarding safe handling of this material, please refer to the Material Safety Data Sheet (MSDS).

CLEAN UP

Thoroughly rinse application equipment with clean water.

PREMIUM COAT SYSTEM FOR ROOFING
STATE FIRE MARSHALL APPROVED LISTING #: 4175-1724:0100

HardieSoffit®

HardieSoffit® Panel Product Description

HARDIESOFFIT® PANELS

HardieSoffit® panels are 8-ft. and 12-ft. long, 1/4-in. thick factory-primed fiber-cement panels designed to be used on the underside of eaves as soffit material. HardieSoffit panels are available as vented or non-vented boards. Vented HardieSoffit panels provide 5 sq. in. of net free ventilation per lineal foot of soffit.

James Hardie offers HardieSoffit panels in a range of time-saving pre-cut widths common to rake and eave applications. HardieSoffit panels come in either a smooth finish or Select Cedarmill® textured finish. Check with your local dealer for product availability. HardieSoffit panels can be combined with HardieTrim® Fascia boards used for fascia rakes and frieze applications to complete the eaves detailing.

HardieSoffit panels are also available with ColorPlus® Technology. The ColorPlus® coating is a factory-applied, oven-baked finish available on a variety of James Hardie® siding and trim products. See your local dealer for details and availability of products, colors and accessories.

HARDIESOFFIT® BEADED PORCH PANEL

HardieSoffit Beaded Porch Panel is a decorative fiber cement panel to be used as ceiling on the underside of porches or eaves as exterior panel materials. HardieSoffit beaded porch panel is 1/4-in. thick, 4 ft. wide, 8 ft. in length, and has 2 in. o.c. beads, and comes with PrimePlus® factory primer and sealer. Must be finished with 100% acrylic paint. See your local dealer for details and availability of products, colors and accessories.



HardieSoffit Non-Vented – Smooth

HardieSoffit® HZ10® Panels
JamesHardie
EFFECTIVE SEPTEMBER 2013
INSTALLATION REQUIREMENTS - PRIMED & COLORPLUS® PRODUCTS
Visit www.jameshardie.com for the most recent version.

IMPORTANT: FAILURE TO INSTALL AND FINISH THIS PRODUCT IN ACCORDANCE WITH APPLICABLE BUILDING CODES AND JAMES HARDIE WRITTEN APPLICATION INSTRUCTIONS MAY LEAD TO PERSONAL INJURY, AFFECT SYSTEM PERFORMANCE, VIOLATE LOCAL BUILDING CODES, AND VOID THE PRODUCT ONLY WARRANTY. BEFORE INSTALLATION, CONFIRM THAT YOU ARE USING THE CORRECT HARDIEZONE INSTRUCTIONS. INSTALLATION OF HZ10™ PRODUCTS OUTSIDE AN HZ10® LOCATION WILL VOID YOUR WARRANTY. TO DETERMINE WHICH HARDIEZONE APPLIES TO YOUR LOCATION, VISIT WWW.HARDIEZONE.COM OR CALL 1-866-942-7343 (866 9HARDIE)

STORAGE & HANDLING:
Store flat and keep dry and covered prior to installation. Installing siding wet or saturated may result in shrinkage at butt joints. Carry product on edge. Protect edges and corners from breakage. James Hardie is not responsible for damage caused by improper storage and handling of the product.

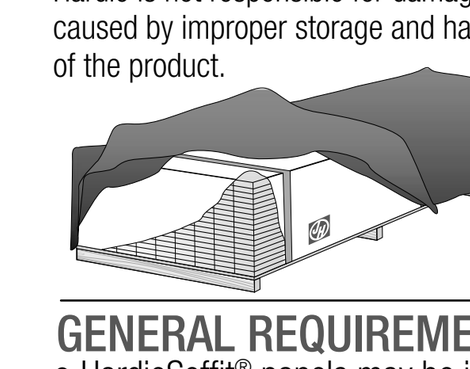

⚠ CUTTING INSTRUCTIONS

OUTDOORS
1. Position cutting station so that wind will blow dust away from user and others in working area.
2. Use one of the following methods:
   a. Best: i. Score and snap; ii. Shears (manual, electric or pneumatic)
   b. Better: i. Dust reducing circular saw equipped with a HardieBlade® saw blade and HEPA vacuum extraction
   c. Good: i. Dust reducing circular saw with a HardieBlade saw blade (only use for low to moderate cutting)

INDOORS
1. Cut only using score and snap, or shears (manual, electric or pneumatic).
2. Position cutting station in well-ventilated area

- NEVER use a power saw indoors
- NEVER use a circular saw blade that does not carry the HardieBlade saw blade trademark
- NEVER dry sweep – Use wet suppression or HEPA Vacuum

Important Note: For maximum protection (lowest respirable dust production), James Hardie recommends always using "Best"-level cutting methods where feasible.

NIOSH-approved respirators can be used in conjunction with above cutting practices to further reduce dust exposures. Additional exposure information is available at www.jameshardie.com to help you determine the most appropriate cutting method for your job requirements. If concern still exists about exposure levels or you do not comply with the above practices, you should always consult a qualified industrial hygienist or contact James Hardie for further information. SD083105

GENERAL REQUIREMENTS:
- HardieSoffit® panels may be installed over either steel or wood framing complying with the local building code. See general fastener requirements. Install soffits to nominal 2 x 4 framing members spaced a maximum of 24 inches on center (fig.4),
- All edges must be supported by framing. (figs. 3 & 4)
- Install water barriers and air barriers as required by local building codes. James Hardie will assume no responsibility for moisture infiltration.
- Ensure gutters have end caps. Maintain a minimum 1" gap between end caps and siding & trim (fig.5).
- Install kickout flashing at roof-wall junctions. (fig 6.)
- DO NOT use stain, oil/alkyd base paint, or powder coating on James Hardie® Products.

INSTALLATION:
- HardieSoffit panels must be fastened to a solid, nailable substrate such as a wood 2x subfascia.
- Additional framing may be needed to ensure proper fastening.
- Soffits can be installed as shown in figure 1. Position the vent holes toward the outside of the eave for optimal airflow.
- 12" to 24" wide Vented HardieSoffit panels, provide 5.0 square inches of net free ventilation per lineal foot.
- Alternatively vents can be installed into non-vented soffit.
- If necessary, an insect screen can be installed using construction adhesive. Note: net free ventilation will be reduced.

Fastener Requirements
- Position fasteners 3/8" from panel edges and no closer than 2" away from corners when using soffit greater than 12" wide (fig. 4) and no closer than 1" away from corners when using soffit that is less than or equal to 12" wide (fig. 3).

Jointing Methods
- Install panels in moderate contact at ends, provide PVC or metal jointers, battens or leave appropriate gap and caulk (fig 2).

Figure 1

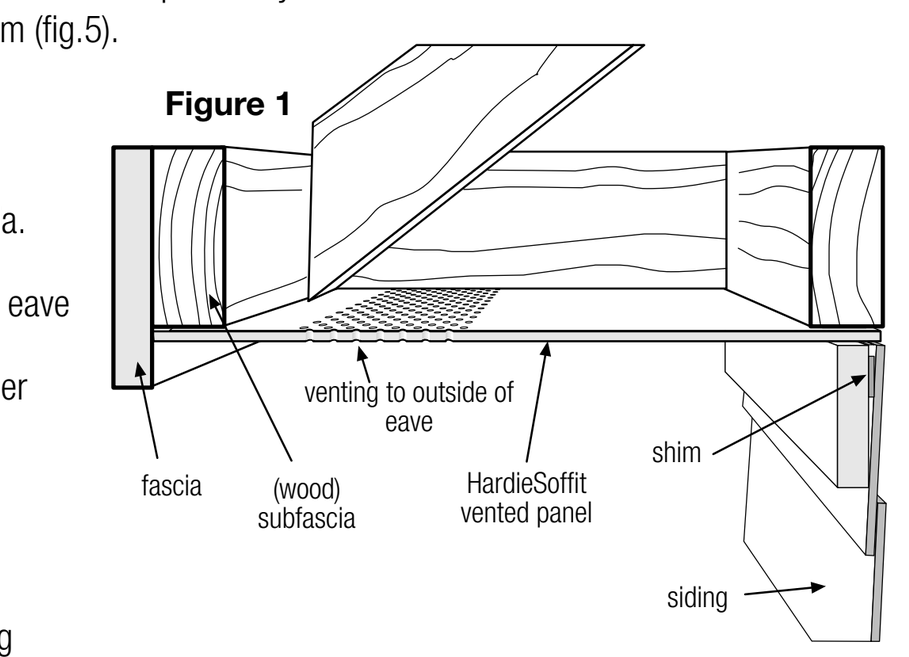

Figure 2

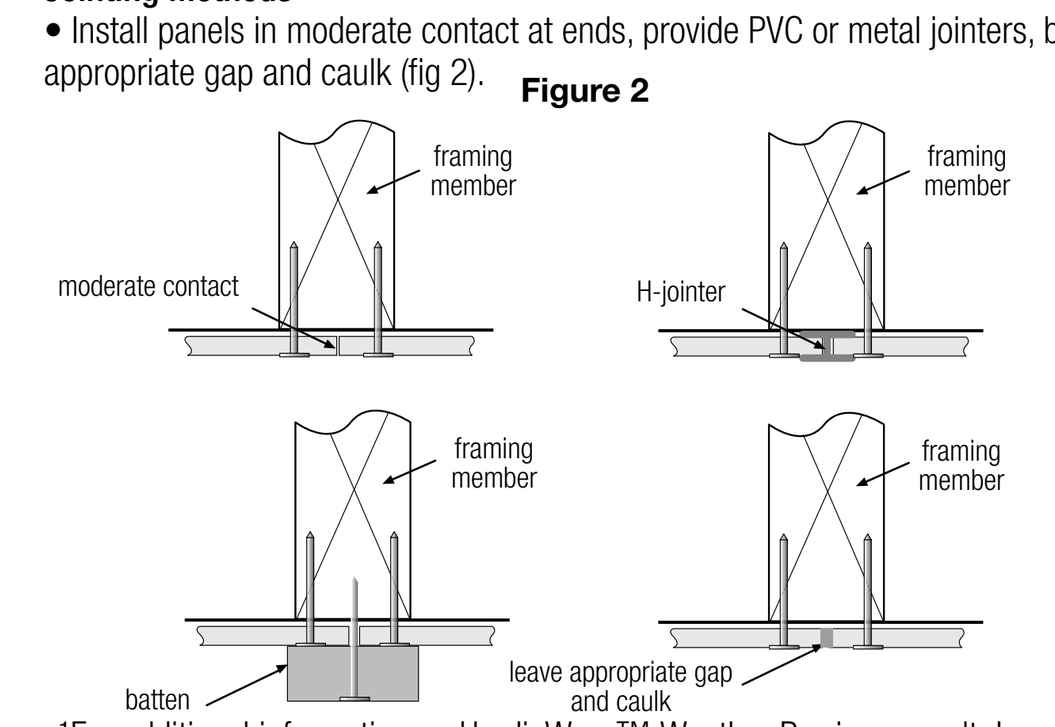

Figure 3
less than or equal to 12" Wide Soffit

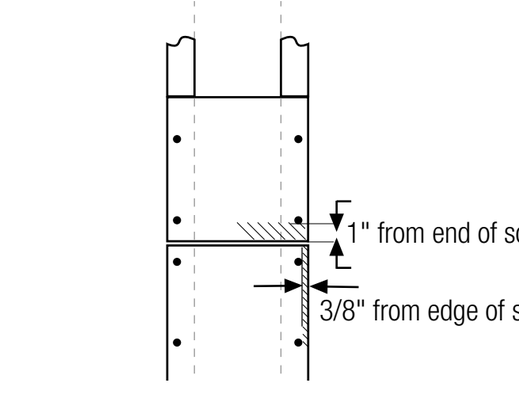

Figure 4
Greater than 12" Wide Soffit

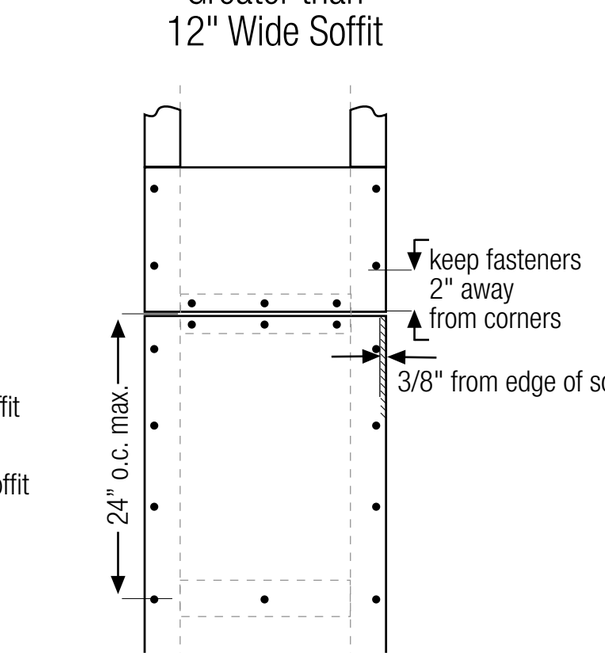

¹For additional information on HardieWrap™ Weather Barrier, consult James Hardie at 1-866-4Hardie or www.hardiewrap.com

WARNING: AVOID BREATHING SILICA DUST
James Hardie® products contain respirable crystalline silica, which is known to the State of California to cause cancer and is considered by IARC and NIOSH to be a cause of cancer from some occupational sources. Breathing excessive amounts of respirable silica dust can also cause a disabling and potentially fatal lung disease called silicosis, and has been linked with other diseases. Some studies suggest smoking may increase these risks. During installation or handling: (1) work in outdoor areas with ample ventilation; (2) use fiber cement shears for cutting or, where not feasible, use a HardieBlade saw blade and dust-reducing circular saw attached to a HEPA vacuum; (3) warn others in the immediate area; (4) wear a properly-fitted, NIOSH-approved dust mask or respirator (e.g. N-95) in accordance with applicable government regulations and manufacturer instructions to further limit respirable silica exposures. During clean-up, use HEPA vacuums or wet cleanup methods - never dry sweep. For further information, refer to our installation instructions and Material Safety Data Sheet available at www.jameshardie.com or by calling 1-800-9HARDIE (1-800-942-7343). FAILURE TO ADHERE TO OUR WARNINGS, MSDS, AND INSTALLATION INSTRUCTIONS MAY LEAD TO SERIOUS PERSONAL INJURY OR DEATH. SD050905

SF1203-P1/3 6/13 8

HARDIE SOFFIT PANEL BY JAMESHARDIE
STATE FIRE MARSHALL APPROVED LISTING #: 8160-2026:0007

MODERN HOUSE
ARCHITECTURE & DESIGN
1265 Indiana Street
San Francisco Ca. 94107
P. 415.800.8520
C. 415.596.7281
modernhouse@mac.com
www.modernhousearchitects.com

LICENSED ARCHITECT · CURTIS C CLINE · C26383 · 6.30.21 RENEWAL DATE · STATE OF CALIFORNIA

Curt Cline Architect

BUILDING PERMIT REVIEW
029-35-005
PANGAN RESIDENCE
AUGUSTA CT
MILPITAS, CA

Revisions:

SPECIFICATIONS SUPPLEMENTAL

SCALE : AS NOTED

DATE : 07.26.2018

SHEET : **A0.6**

THESE DRAWINGS ARE THE ORIGINAL UNPUBLISHED WORK OF THE ARCHITECT AND MAY NOT BE DUPLICATED OR USED WITHOUT THE WRITTEN PERMISSION OF THE ARCHITECT.
Curt Cline
© MODERN HOUSE

FILE PATH: /Users/moderndesignco/Dropbox/000 ARCHICAD FILES/Pangan ArchiCAD/PANGEN_BUILDING_Comments2_10062020.pln • LAST SAVED BY: Modern House - Natsumi • PRINTED ON 4/27/21 @ 3:27 PM
PROJECT COMPANY • PANGAN RESIDENCE • *** PROJECT NUMBER *** • A0.7

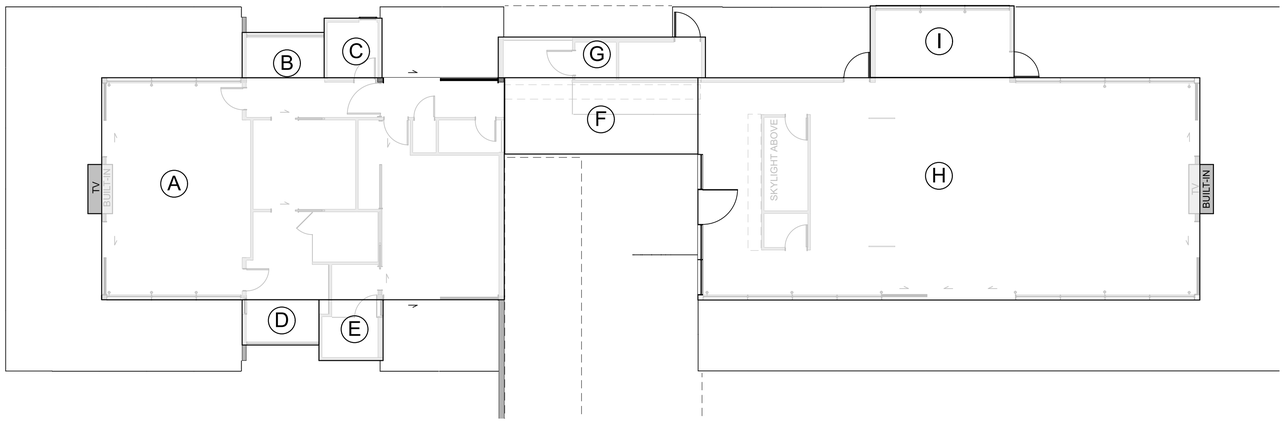

1 A0.7

MAIN FLOOR AREA

SCALE: 1/8" = 1'-0"

A	24.0	X	16.3	=	391.20	SQ. FT.
B	10.0	X	9.3	=	93.0	
C	25.4	X	8.5	=	220.5	
D	11.0	X	6.6	=	72.6	
E	27.2	X	7.0	=	190.4	
F	12.9	X	8.7	=	112.2	
G	15.5	X	13.8	=	213.9	
H	23.3	X	13.3	=	309.9	
I	17.7	X	8.1	=	143.4	
J	51.4	X	8.6	=	442.1	
K	51.8	X	15.5	=	802.9	

MAIN FLOOR AREA TOTAL: 2,992.1 SQ. FT.

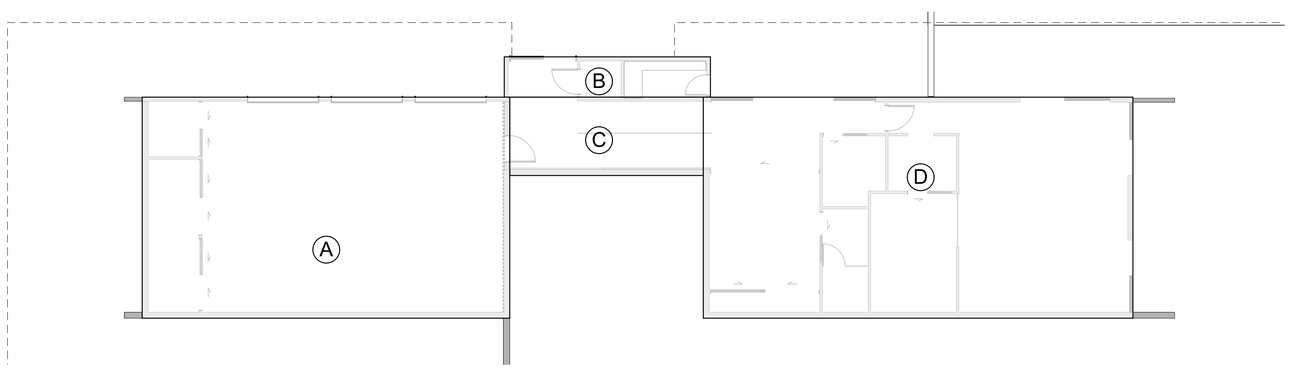

2 A0.7

GROUND FLOOR AREA

SCALE: 1/8" = 1'-0"

A	37.5	X	24.4	=	915.0	SQ. FT. (GARAGE)
B	23.3	X	4.7	=	109.5	
C	21.8	X	8.6	=	187.5	
D	43.5	X	8.6	=	374.1	
E	43.4	X	15.8	=	685.7	

GROUND FLOOR AREA TOTAL: 2,271.8 SQ. FT.

THESE DRAWINGS ARE THE ORIGINAL UNPUBLISHED WORK OF THE ARCHITECT CURTIS C. CLINE AND MAY NOT BE DUPLICATED, USED WITHOUT THE WRITTEN PERMISSION OF THE ARCHITECT.
© Curtis C. Cline
MODERN HOUSE

MODERN HOUSE
ARCHITECTURE & DESIGN
1265 Indiana Street
San Francisco Ca. 94107
P. 415.800.8520
C. 415.596.7281
modernhouse@mac.com
www.modernhousearchitects.com

LICENSED ARCHITECT CURTIS C. CLINE C26383 6.30.21 RENEWAL DATE STATE OF CALIFORNIA

Curt Cline Architect

BUILDING PERMIT REVIEW

029-35-005

PANGAN RESIDENCE

AUGUSTA CT
MILPITAS, CA

Revisions:

FLOOR AREA CALCULATION

SCALE : AS NOTED

DATE : 07.26.2018

SHEET : A0.7

FILE PATH: /Users/moderndesignco/Dropbox/000 ARCHICAD FILES/Pangan ArchiCAD/PANGEN_BUILDING_Comments2_10062020.pln • LAST SAVED BY: Modern House - Natsumi • PRINTED ON 4/27/21 @ 3:27 PM
PROJECT COMPANY • PANGAN RESIDENCE • *** PROJECT NUMBER *** • A1.0

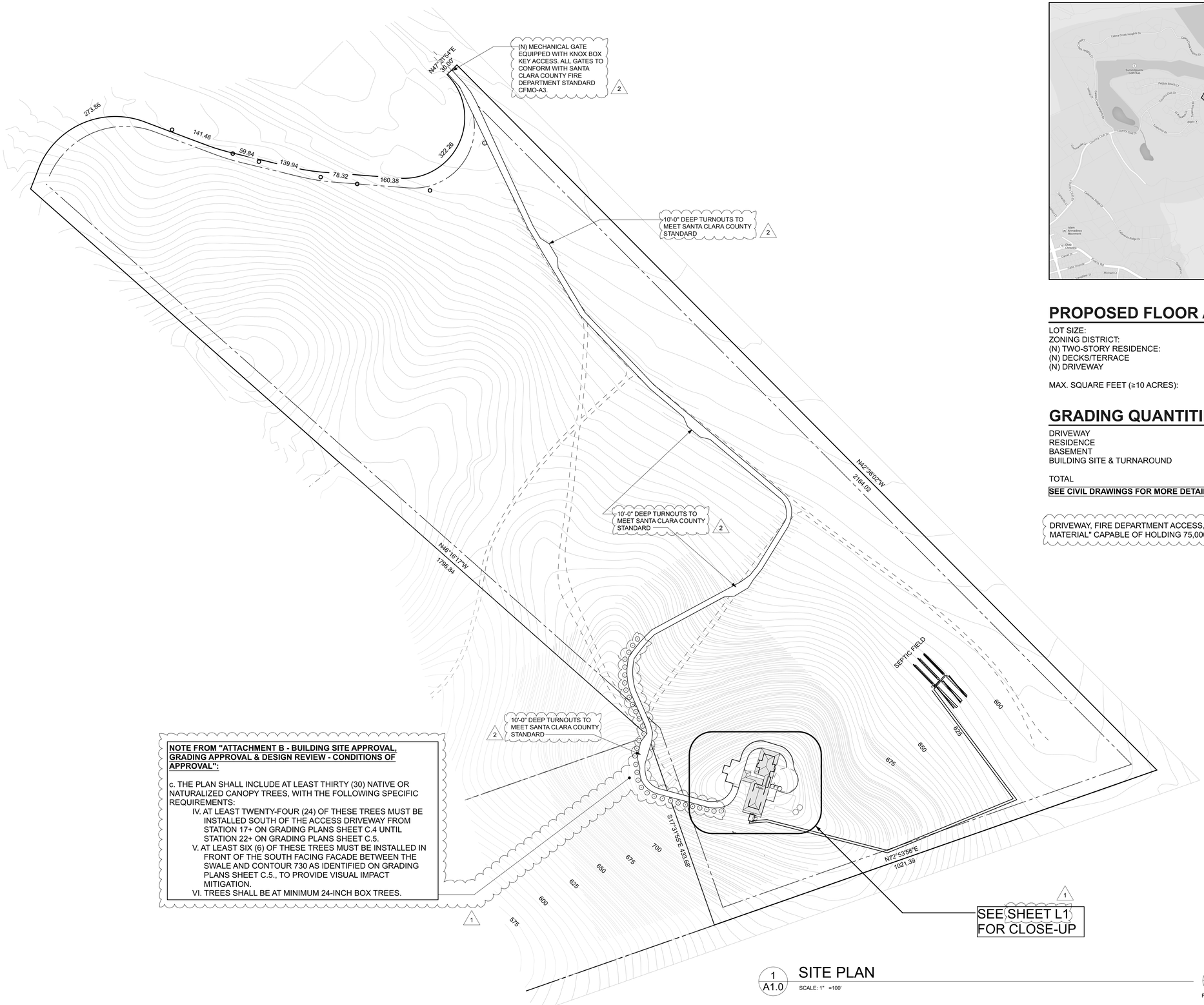

NOTE FROM "ATTACHMENT B - BUILDING SITE APPROVAL, GRADING APPROVAL & DESIGN REVIEW - CONDITIONS OF APPROVAL":

c. THE PLAN SHALL INCLUDE AT LEAST THIRTY (30) NATIVE OR NATURALIZED CANOPY TREES, WITH THE FOLLOWING SPECIFIC REQUIREMENTS:

- IV. AT LEAST TWENTY-FOUR (24) OF THESE TREES MUST BE INSTALLED SOUTH OF THE ACCESS DRIVEWAY FROM STATION 17+ ON GRADING PLANS SHEET C.4 UNTIL STATION 22+ ON GRADING PLANS SHEET C.5.
- V. AT LEAST SIX (6) OF THESE TREES MUST BE INSTALLED IN FRONT OF THE SOUTH FACING FACADE BETWEEN THE SWALE AND CONTOUR 730 AS IDENTIFIED ON GRADING PLANS SHEET C.5., TO PROVIDE VISUAL IMPACT MITIGATION.
- VI. TREES SHALL BE AT MINIMUM 24-INCH BOX TREES.

1

SITE PLAN

1 / A1.0

SCALE: 1" =100'

PROJECT NORTH

VICINITY MAP

PROPOSED FLOOR AREA

LOT SIZE:	38.77 ACRES
ZONING DISTRICT:	HS-d2 (100%)
(N) TWO-STORY RESIDENCE:	5,263.9 SQ. FT.
(N) DECKS/TERRACE	2,369.5 SQ. FT.
(N) DRIVEWAY	36,564 SQ. FT.
MAX. SQUARE FEET (≥10 ACRES):	8,000 SQ. FT.

GRADING QUANTITIES (CUBIC YDS)

DRIVEWAY	2289	3061
RESIDENCE	320	0
BASEMENT	756	0
BUILDING SITE & TURNAROUND	2300	140
TOTAL	5664	3201

SEE CIVIL DRAWINGS FOR MORE DETAILS

DRIVEWAY, FIRE DEPARTMENT ACCESS, WILL BE OF "ALL WEATHER MATERIAL" CAPABLE OF HOLDING 75,000 LBS.

2

MODERN HOUSE
ARCHITECTURE & DESIGN
1265 Indiana Street
San Francisco Ca. 94107
P. 415.800.8520
C. 415.596.7281
modernhouse@mac.com
www.modernhousearchitects.com

LICENSED ARCHITECT CURTIS C. CLINE C26383 6.30.21 RENEWAL DATE STATE OF CALIFORNIA

Curt Cline Architect

BUILDING PERMIT REVIEW

029-35-005

PANGAN RESIDENCE

AUGUSTA CT
MILPITAS, CA

Revisions:

1	BUILDING COMMENTS 11/29/2018
2	BUILDING COMMENTS 9/16/2020

SITE PLAN

SCALE : AS NOTED

DATE : 07.26.2018

SHEET : **A1.0**

THESE DRAWINGS ARE THE ORIGINAL UNPUBLISHED WORK OF THE ARCHITECT CURTIS CLINE AND MAY NOT BE USED OR DISCLOSED WITHOUT THE WRITTEN PERMISSION OF THE ARCHITECT.
Curt Cline
MODERN HOUSE
©

FILE PATH: /Users/moderndesignco/Dropbox/000 ARCHICAD FILES/Pangan ArchiCAD/PANGEN_BUILDING_Comments2_10062020.pln • LAST SAVED BY: Modern House - Natsumi • PRINTED ON 4/27/21 @ 3:27 PM
PROJECT COMPANY • PANGAN RESIDENCE • *** PROJECT NUMBER *** • A1.2

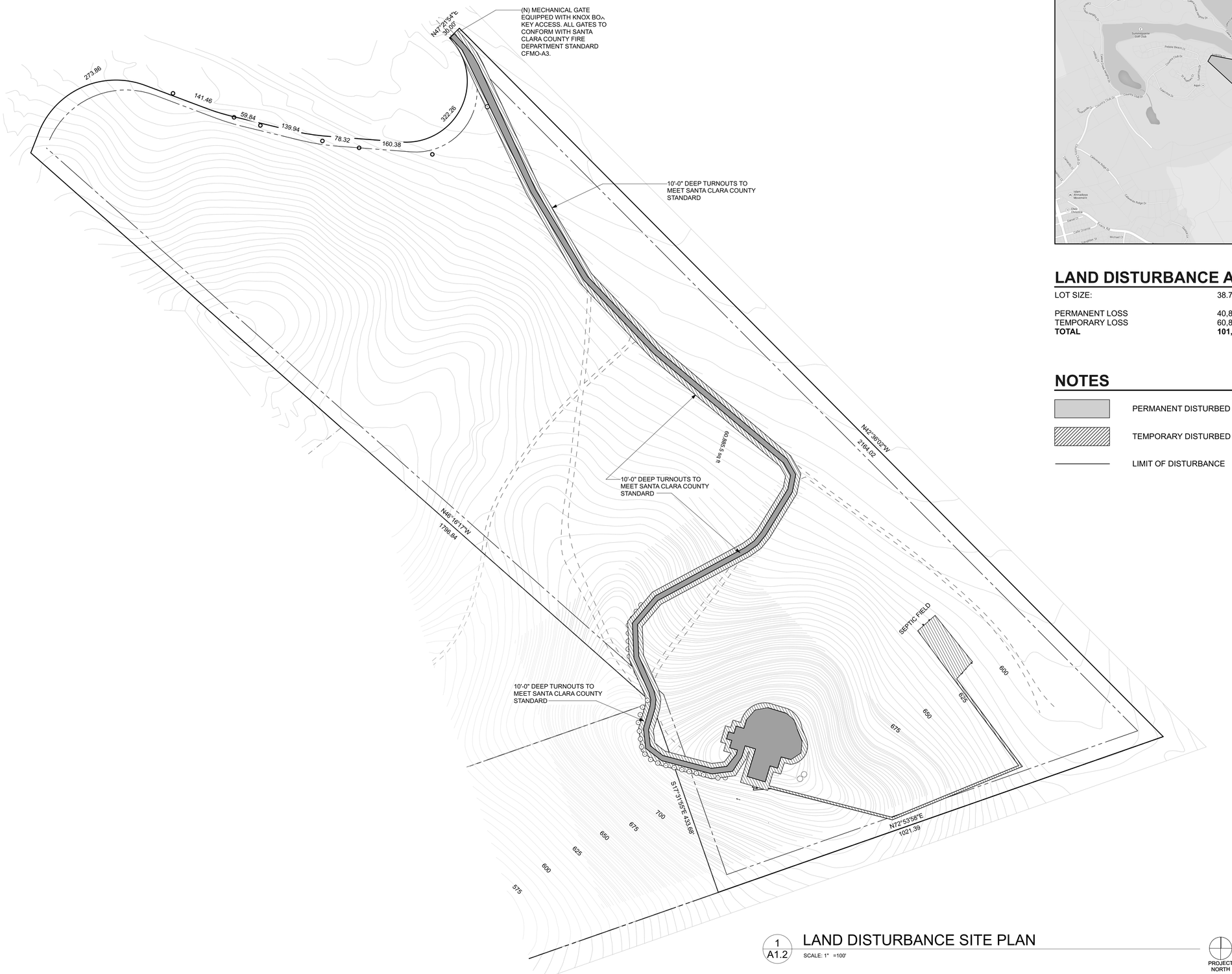

1 A1.2 LAND DISTURBANCE SITE PLAN

SCALE: 1" =100'

PROJECT NORTH

VICINITY MAP

LAND DISTURBANCE AREA

LOT SIZE:	38.77 ACRES
PERMANENT LOSS	40,874.0 SQ. FT.
TEMPORARY LOSS	60,885.5 SQ. FT.
TOTAL	**101,759.5 SQ. FT.**

NOTES

PERMANENT DISTURBED AREA

TEMPORARY DISTURBED AREA

LIMIT OF DISTURBANCE

MODERN HOUSE
ARCHITECTURE & DESIGN
1265 Indiana Street
San Francisco Ca. 94107
P. 415.800.8520
C. 415.596.7281
modernhouse@mac.com
www.modernhousearchitects.com

LICENSED ARCHITECT CURTIS C. CLINE C26383 6.30.21 RENEWAL DATE STATE OF CALIFORNIA

Curt Cline Architect

BUILDING PERMIT REVIEW
029-35-005
PANGAN RESIDENCE
AUGUSTA CT
MILPITAS, CA

Revisions:

LAND DISTURBANCE SITE PLAN

SCALE : AS NOTED

DATE : 07.26.2018

SHEET : A1.2

THESE DRAWINGS ARE THE ORIGINAL UNPUBLISHED WORK OF MODERN HOUSE AND ARE NOT TO BE USED, REPRODUCED WITHOUT THE WRITTEN PERMISSION OF THE ARCHITECT.
©MODERN HOUSE

FILE PATH: /Users/modernhouse/Dropbox/000 ARCHICAD FILES/Pangan Arch/CAD/PANGEN_BUILDING_Comments2_10062020.pln • LAST SAVED BY: Modern House - Natsumi • PRINTED ON 4/27/21 @ 3:27 PM
PROJECT COMPANY • PANGAN RESIDENCE • *** PROJECT NUMBER *** • A2.0

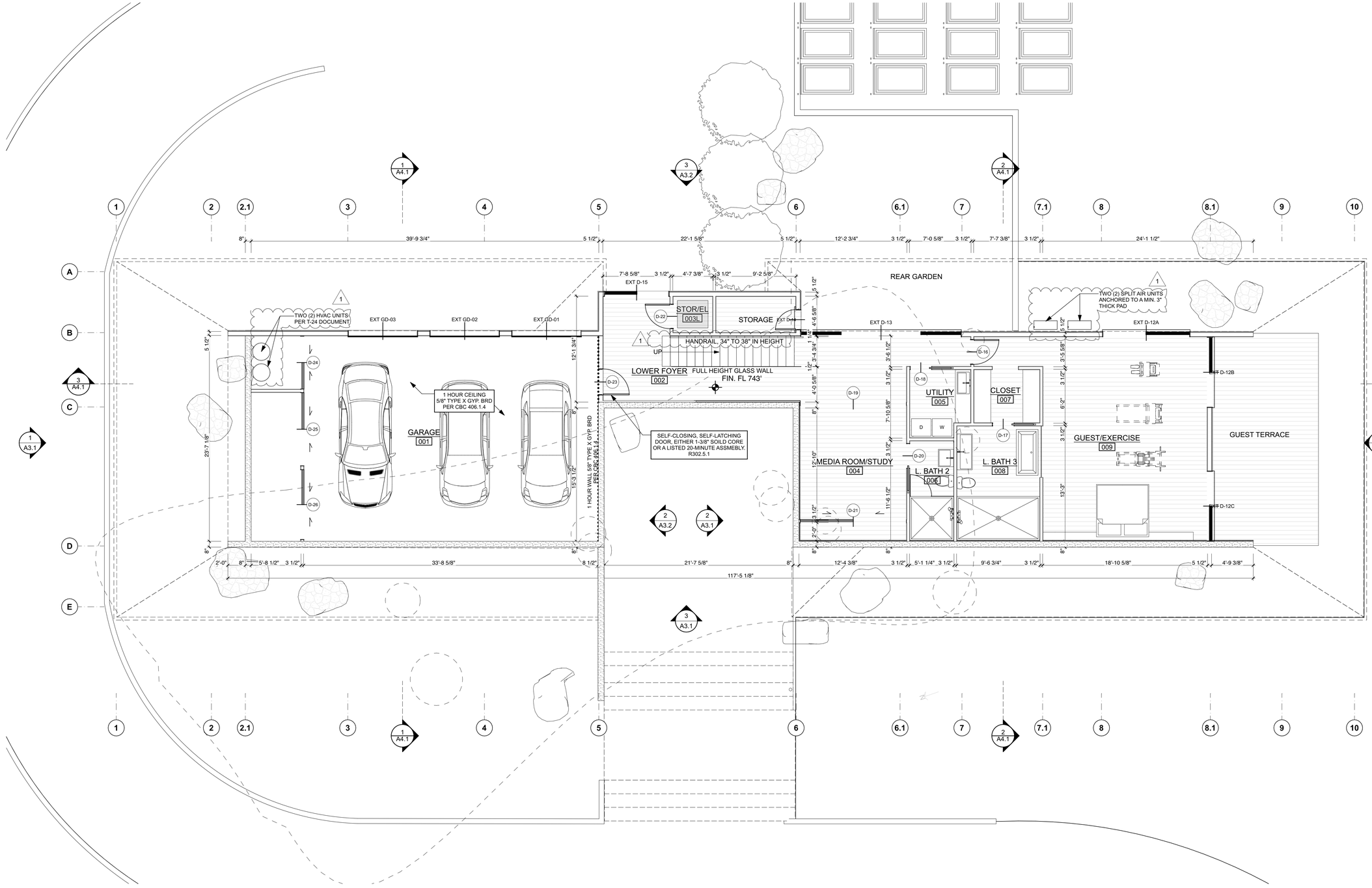

6 A2.0 GROUND FLOOR PLAN

SCALE: 3/16" = 1'-0"

PROJECT NORTH / TRUE NORTH

THESE DRAWINGS ARE THE ORIGINAL UNPUBLISHED WORK OF THE ARCHITECT CURTIS C. CLINE AND MAY NOT BE USED WITHOUT THE WRITTEN PERMISSION OF THE ARCHITECT.
©MODERN HOUSE

MODERN HOUSE
ARCHITECTURE & DESIGN
1265 Indiana Street
San Francisco Ca. 94107
P. 415.800.8520
C. 415.596.7281
modernhouse@mac.com
www.modernhousearchitects.com

LICENSED ARCHITECT CURTIS C. CLINE C26383 6.30.21 RENEWAL DATE STATE OF CALIFORNIA

Curt Cline Architect

BUILDING PERMIT REVIEW

029-35-005

PANGAN RESIDENCE

AUGUSTA CT
MILPITAS, CA

Revisions:

1	BUILDING COMMENTS 11/29/2018

GROUND FLOOR PLAN

SCALE : AS NOTED

DATE : 07.26.2018

SHEET : A2.0

FILE PATH: /Users/modernhousearchitects/Dropbox/000 ARCHICAD FILES/Pangan Arch/CAD/PANGEN_BUILDING_Comments2_10062020.pln • LAST SAVED BY: Modern House - Natsumi • PRINTED ON 4/27/21 @ 3:27 PM
PROJECT COMPANY • PANGAN RESIDENCE • *** PROJECT NUMBER *** • A2.1

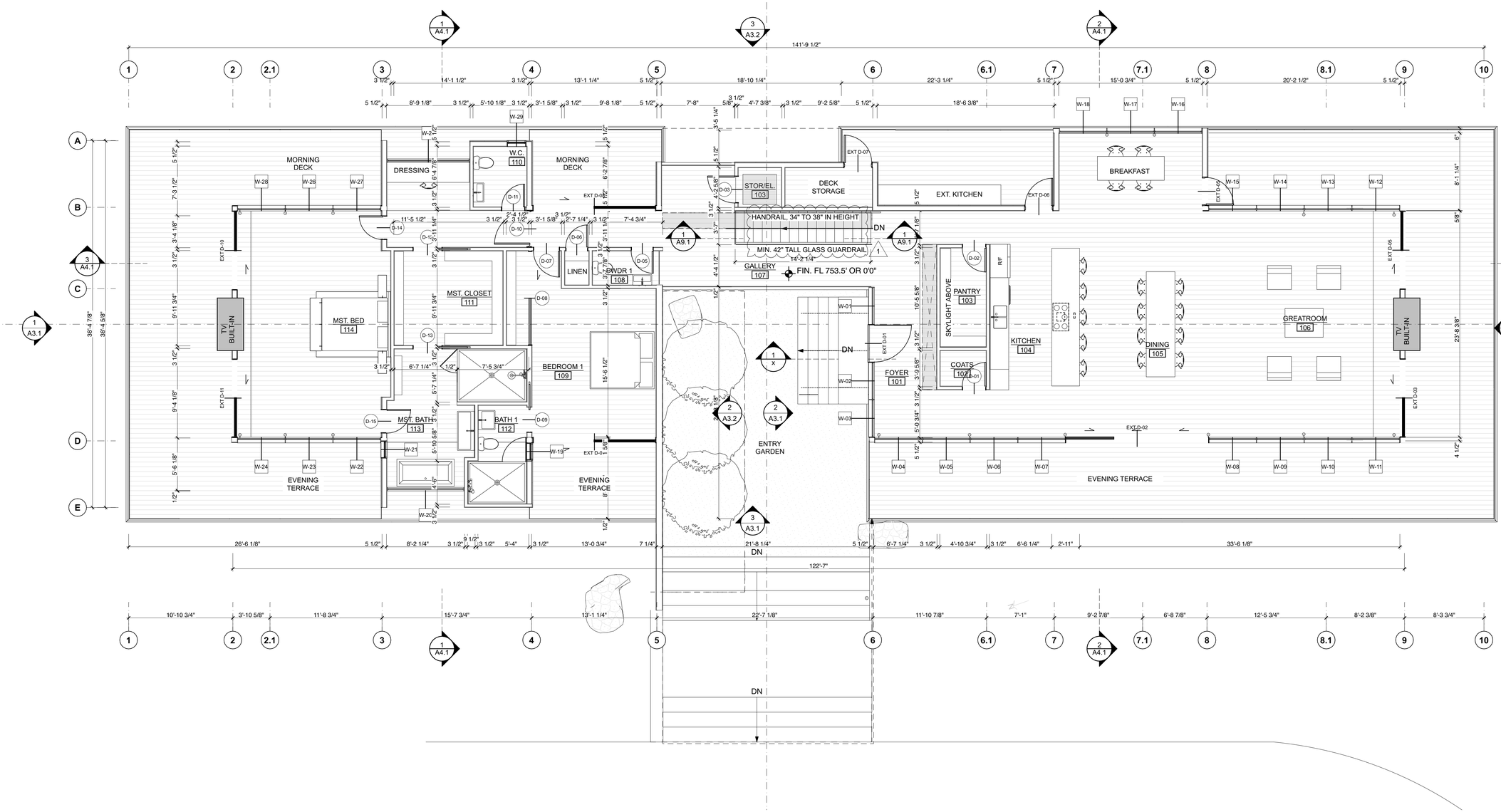

MAIN FLOOR PLAN

SCALE: 3/16" = 1'-0"

PROJECT NORTH / TRUE NORTH

THESE DRAWINGS ARE THE ORIGINAL UNPUBLISHED WORK OF THE ARCHITECT AND ARE NOT TO BE USED OR REVISED WITHOUT THE WRITTEN PERMISSION OF THE ARCHITECT.
© MODERN HOUSE

MODERN HOUSE
ARCHITECTURE & DESIGN
1265 Indiana Street
San Francisco Ca. 94107
P. 415.800.8520
C. 415.596.7281
modernhouse@mac.com
www.modernhousearchitects.com

LICENSED ARCHITECT CURTIS C. CLINE C26383 6.30.21 RENEWAL DATE STATE OF CALIFORNIA

Curt Cline Architect

BUILDING PERMIT REVIEW

029-35-005

PANGAN RESIDENCE

AUGUSTA CT
MILPITAS, CA

Revisions:

1 BUILDING COMMENTS 11/29/2018

MAIN FLOOR PLAN

SCALE : AS NOTED

DATE : 07.26.2018

SHEET : **A2.1**

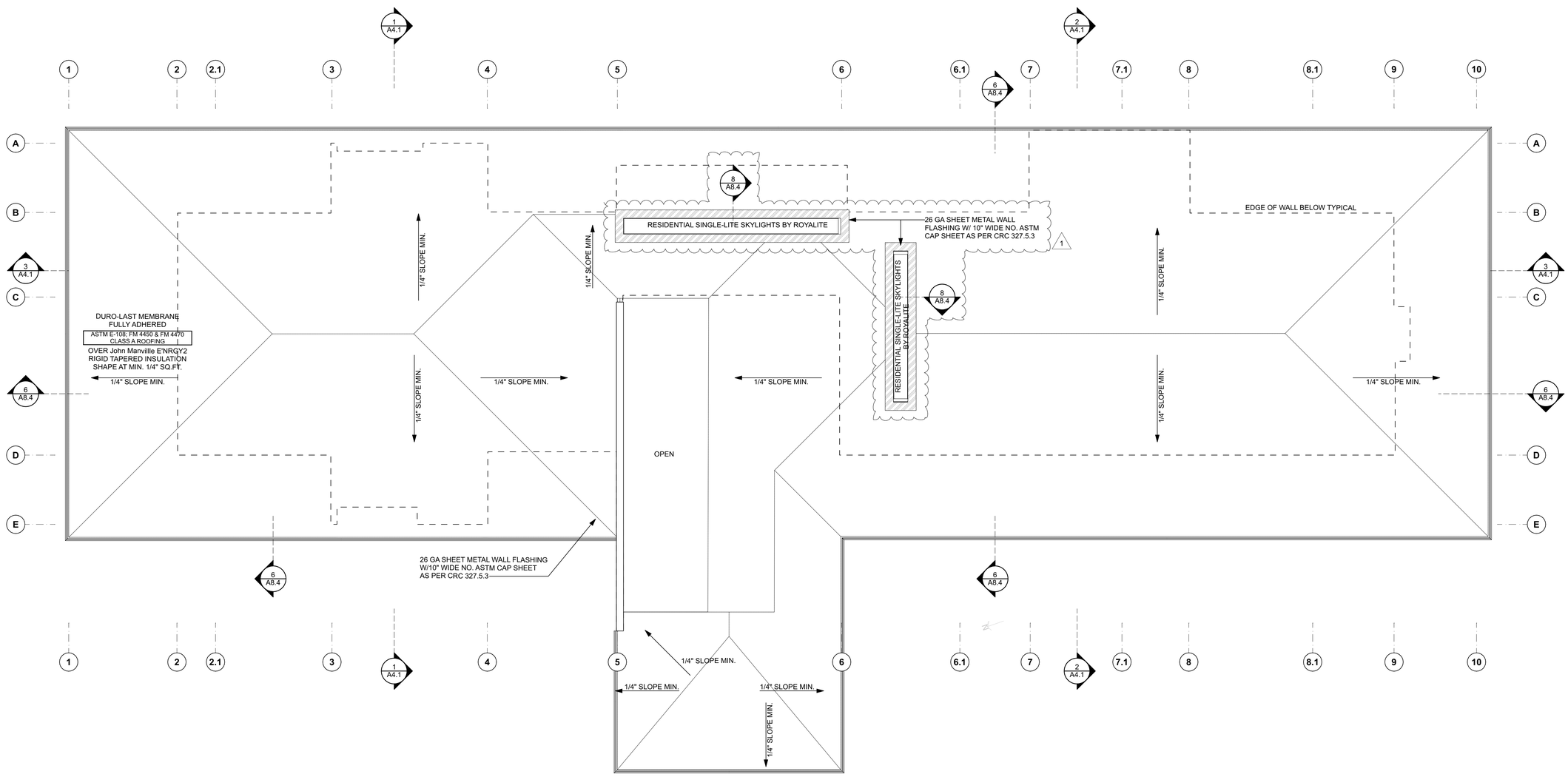

1 A2.2 ROOF PLAN

SCALE: 3/16" = 1'-0"

PROJECT NORTH TRUE NORTH

MODERN HOUSE

ARCHITECTURE & DESIGN

1265 Indiana Street
San Francisco Ca. 94107
P. 415.800.8520
C. 415.596.7281
modernhouse@mac.com
www.modernhousearchitects.com

LICENSED ARCHITECT CURTIS C. CLINE C26383 6-30-21 RENEWAL DATE STATE OF CALIFORNIA

Curt Cline Architect

BUILDING PERMIT REVIEW

029-35-005

PANGAN RESIDENCE

AUGUSTA CT
MILPITAS, CA

Revisions:

1 BUILDING COMMENTS 11/29/2018

ROOF PLAN

SCALE : AS NOTED

DATE : 07.26.2018

SHEET : A2.2

FILE PATH: /Users/moderndesignco/Dropbox/000 ARCHICAD FILES/Pangan ArchiCAD/PANGEN_BUILDING_Comments2_10062020.pln • LAST SAVED BY: Modern House - Natsumi • PRINTED ON 4/27/21 @ 3:27 PM
PROJECT COMPANY • PANGAN RESIDENCE • *** PROJECT NUMBER *** • A2.2

THESE DRAWINGS ARE THE ORIGINAL UNPUBLISHED WORK OF THE ARCHITECT AND MAY NOT BE DUPLICATED OR USED WITHOUT THE WRITTEN PERMISSION OF THE ARCHITECT.
Curt Cline
© MODERN HOUSE

FILE PATH: /Users/modernhouse/Dropbox/000 ARCHICAD FILES/Pangan Arch/CAD/PANGEN_BUILDING_Comments2_10062020.pln • LAST SAVED BY: Modern House - Natsumi • PRINTED ON 4/27/21 @ 3:28 PM
PROJECT COMPANY • PANGAN RESIDENCE • *** PROJECT NUMBER *** • A3.1

KEY NOTES - EXT. ELEVATIONS:

1	3 COAT SMOOTH STUCCO SAND FINISH (SEE ARCHITECT FOR COLOR)	11	EXPOSED STEEL BEAM WITH CLEAR POWDER COAT
2	BOARD FORMED CONC. SEE ARCHITECT FOR FINISH QUALITY	12	STEEL PLATE W/ CLEAR POWDERCOAT
3	ZINC PANELS	13	LIMESTONE TILE (SEE ARCHITECT FOR SAMPLE)
4	ZINC FASCIA	14	1/2" TEMP. GLASS (CLEAR)
5	PRE-PAINTED HOLLOW METAL FRAME W/ ACID ETCHED GLASS PANEL GARAGE DOOR	15	1/2" TEMP. GLASS (ACID ETCHED)
6	PRE-PAINTED HOLLOW METAL ALUM. WINDOW	16	FRAMELESS DUAL GLAZED TEMPERED GLASS W/ SOLAR BAN 70 AND LOW E
7	PRE-PAINTED HOLLOW METAL ALUM. DOOR	17	GUTTER SEE DETAIL
8	42" MIN. 1/2" TEMP. GLASS GUARDRAIL	18	1X3 CHICHIPATE CHANNEL GROOVE SIDING
9	ZINC PLANTER	19	PRE-PAINTED METAL BREAK METAL PROVIDED BY WINDOW/DOOR FABRICATOR
10	EPDM ROOFING		

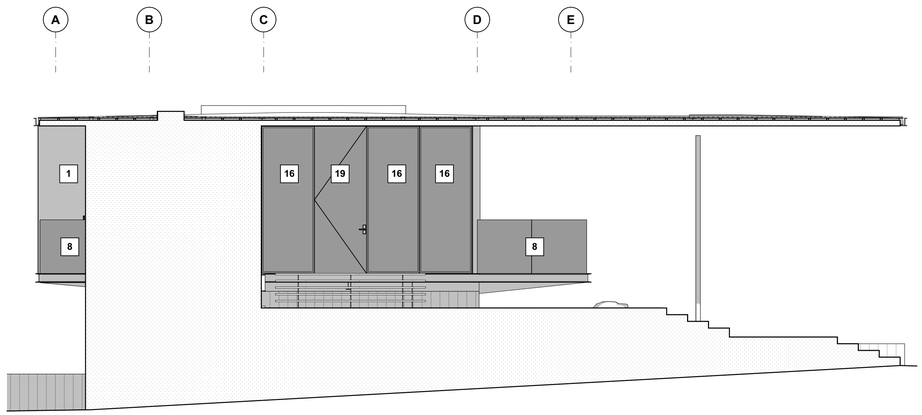

2 A3.1 NORTH ELEVATION CT. YRD. (PROPOSED)

SCALE: 3/16" = 1'-0"

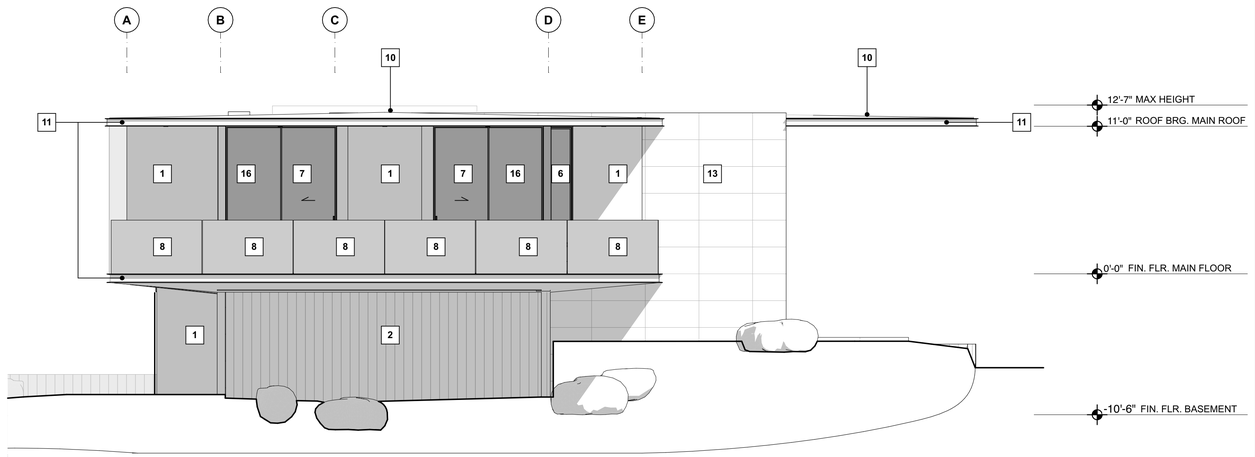

1 A3.1 NORTH ELEVATION (PROPOSED)

SCALE: 3/16" = 1'-0"

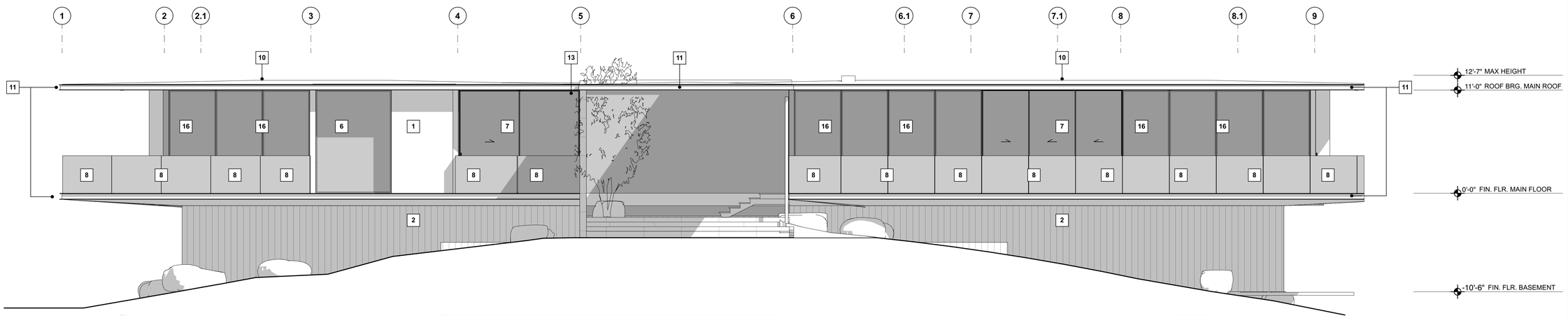

3 A3.1 WEST ELEVATION (PROPOSED)

SCALE: 3/16" = 1'-0"

THESE DRAWINGS ARE THE ORIGINAL UNPUBLISHED WORK OF THE MODERN HOUSE AND MAY NOT BE DUPLICATED, USED WITHOUT THE WRITTEN PERMISSION OF THE ARCHITECT.
© MODERN HOUSE

MODERN HOUSE
ARCHITECTURE & DESIGN
1265 Indiana Street
San Francisco Ca. 94107
P. 415.800.8520
C. 415.596.7281
modernhouse@mac.com
www.modernhousearchitects.com

LICENSED ARCHITECT CURTIS C. CLINE C26383 6.30.21 RENEWAL DATE STATE OF CALIFORNIA

Curt Cline Architect

BUILDING PERMIT REVIEW

029-35-005

PANGAN RESIDENCE

AUGUSTA CT
MILPITAS, CA

Revisions:

NORTH & WEST ELEVATIONS (PROPOSED)

SCALE : AS NOTED

DATE : 07.26.2018

SHEET : A3.1

FILE PATH: /Users/modernidesigncc/Dropbox/000 ARCHICAD FILES/Pangan ArchiCAD/PANGEN_BUILDING_Comments2_10062020.pln • LAST SAVED BY: Modern House - Natsumi • PRINTED ON 4/27/21 @ 3:28 PM
PROJECT COMPANY • PANGAN RESIDENCE • *** PROJECT NUMBER *** • A3.2

KEY NOTES - EXT. ELEVATIONS:

1	3 COAT SMOOTH STUCCO SAND FINISH (SEE ARCHITECT FOR COLOR)	11	EXPOSED STEEL BEAM WITH CLEAR POWDER COAT
2	BOARD FORMED CONC. SEE ARCHITECT FOR FINISH QUALITY	12	STEEL PLATE W/ CLEAR POWDERCOAT
3	ZINC PANELS	13	LIMESTONE TILE (SEE ARCHITECT FOR SAMPLE)
4	ZINC FASCIA	14	1/2" TEMP. GLASS (CLEAR)
5	PRE-PAINTED HOLLOW METAL FRAME W/ ACID ETCHED GLASS PANEL GARAGE DOOR	15	1/2" TEMP. GLASS (ACID ETCHED)
6	PRE-PAINTED HOLLOW METAL ALUM. WINDOW	16	FRAMELESS DUAL GLAZED TEMPERED GLASS W/ SOLAR BAN 70 AND LOW E
7	PRE-PAINTED HOLLOW METAL ALUM. DOOR	17	GUTTER SEE DETAIL
8	42" MIN. 1/2" TEMP. GLASS GUARDRAIL	18	1X3 CHICHIPATE CHANNEL GROOVE SIDING
9	ZINC PLANTER	19	PRE-PAINTED METAL BREAK METAL PROVIDED BY WINDOW/DOOR FABRICATOR
10	EPDM ROOFING		

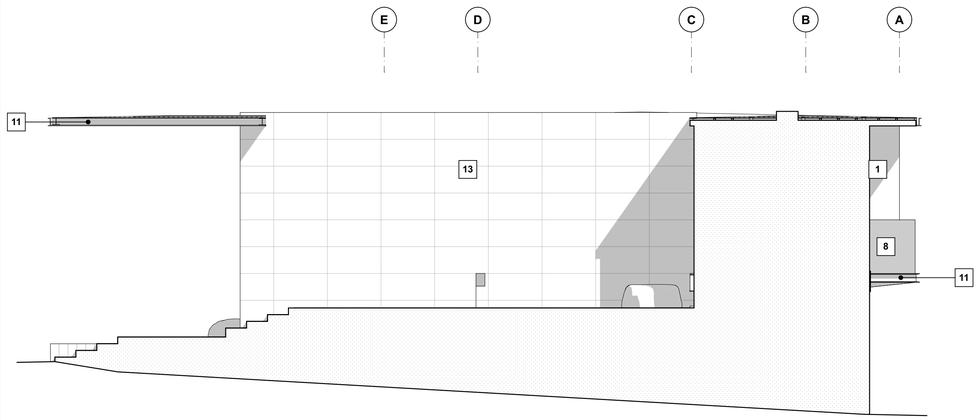

2 A3.2 SOUTH ELEVATION CT. YRD. (PROPOSED)

SCALE: 3/16" = 1'-0"

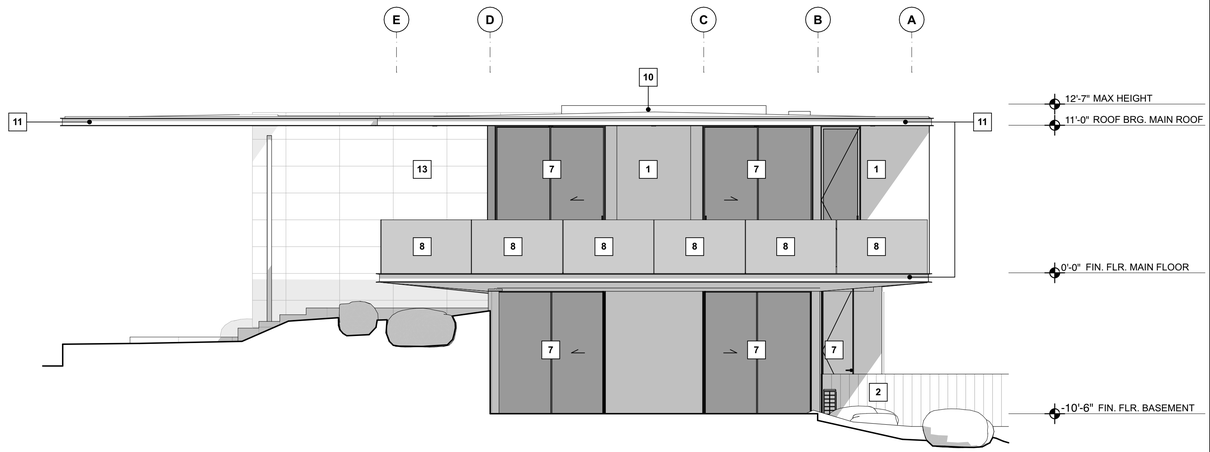

1 A3.2 SOUTH ELEVATION (PROPOSED)

SCALE: 3/16" = 1'-0"

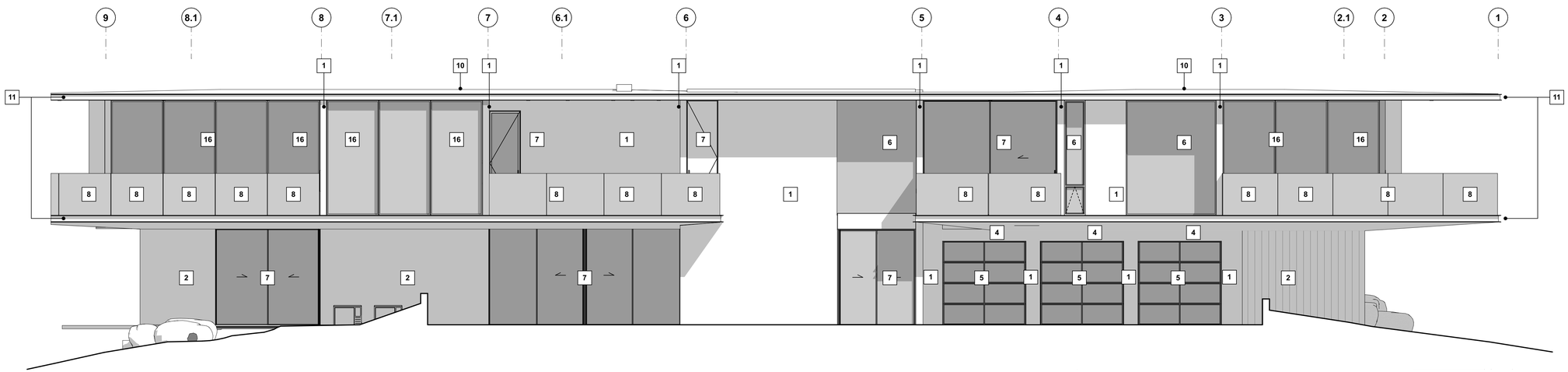

3 A3.2 EAST ELEVATION (PROPOSED)

SCALE: 3/16" = 1'-0"

THESE DRAWINGS ARE THE ORIGINAL UNPUBLISHED WORK OF THE MODERN HOUSE AND MAY NOT BE USED WITHOUT THE WRITTEN PERMISSION OF THE ARCHITECT.
© MODERN HOUSE

MODERN HOUSE
ARCHITECTURE & DESIGN
1265 Indiana Street
San Francisco Ca. 94107
P. 415.800.8520
C. 415.596.7281
modernhouse@mac.com
www.modernhousearchitects.com

LICENSED ARCHITECT CURTIS C. CLINE C26383 6.30.21 RENEWAL DATE STATE OF CALIFORNIA

Curt Cline Architect

BUILDING PERMIT REVIEW

029-35-005

PANGAN RESIDENCE

AUGUSTA CT
MILPITAS, CA

Revisions:

SOUTH & EAST ELEVATIONS (PROPOSED)

SCALE : AS NOTED

DATE : 07.26.2018

SHEET : A3.2

FILE PATH: /Users/moderndesignco/Dropbox/000 ARCHICAD FILES/Pangan ArchiCAD/PANGEN_BUILDING_Comments2_10062020.pln • LAST SAVED BY: Modern House - Natsumi • PRINTED ON 4/27/21 @ 3:28 PM
PROJECT COMPANY • PANGAN RESIDENCE • *** PROJECT NUMBER *** • A4.1

NOTES - BUILDING SECTIONS:

- EXTERIOR WALL COVERING SHALL EXTEND FROM THE TOP OF THE FOUNDATION TO THE ROOF, AND TERMINATE AT 2" NOMINAL SOLID WOOD BLOCKING BETWEEN RAFTERS AT ALL ROOF OVERHANGS, OR IN THE CASE OF ENCLOSED EAVES, TERMINATE AT ENCLOSURE AS PER (CRC R327.7.3.1)
- THE UNDERSIDE OF CANTILEVERED AND OVERHANGING DECKS, BALCONIES AND SIMILAR APPENDAGES SHALL MAINTAIN THE SMAE IGNITION-RESISTANCE OF EXTERIOR WALLS OR BE ENCLOSED TO GRADE (CRC R327.7.7)

KEY NOTES - BLDG. SECTIONS:

1. 3 COAT STUCCO W/ SMOOTH FINISH
2. 1X3 CHANNEL GROOVE CHICHIPATE SIDING
3. CONCRETE FLATWORK MIN. 5" THICK W/ #3'S E.W. AT 12" O.C. OVER 2" SAND OVER 4" MIN. WASHED COMPACTED PEA GRAVEL W/ C JOINTS AT 5'-0" MAX. W/ 1/2" E JOINTS AT OTHER SLAB INTERFACES
4. MATT SLAB SEE STRUCTURAL
5. RETAINING WALL SEE STRUCTURAL
6. A.B./HOLDOWN SEE STRUCTURAL
7. 1/2" TEMPERED GLASS GUARDRAIL
8. **TYPICAL FLAT ROOF CONSTRUCTION** (R-VALUE: R38) 1
   PremiumCoat ROOF COATING BY HYDRO-STOP LLC (STATE FIRE MARSHALL APPROVED LISTING #: 4175-1724:0100) OVER TAPERED RIGID INSULATION OVER 1/4" DENSDECK™ FIREPROOF DECKING PLYWOOD ROOF SHEATHING OVER 2X ROOF JOISTS (SEE STRUCTURAL) W/ 7.7" OF AIRTIGHT SPRAY FOAM OPEN CELL FULL THICKNESS (STATE FIRE MARSHALL APPROVED LISTING #: 2440-1705:0101) INSULATION W/ 1/2" GYP. BRD. AT INTERIOR WITH LEVEL 5 MUD AND PAINT
9. **TYPICAL FLOOR CONSTRUCTION OVER FRAMING** (R-VALUE: R30) 1
   3/4" TEAK T &G FLOORING OVER INTEGRAL PLYWOOD AND HYDRO RADIANT FLOOR SHEATHING OVER FLOOR FRAMING (SEE STRUCTURAL) W/ 1/2" GYP. BRD. CEILING W/ LEVEL 5 MUD AND PAINT
10. **TYPICAL FLOOR CONSTRUCTION OVER SLAB** (R-VALUE: R30) 1
    3/4" x 6" TEAK T &G FLOORING OVER INTEGRAL PLYWOOD OVER 1 1/2" GYP. CRETE W/ HYDRO RADIANT OVER CONCRETE SLAB (SEE STRUCTURAL FOR REQUIREMENTS)
11. **TYPICAL DECK CONSTRUCTION** (R-VALUE: R30) 1
    PALOPE DECKING OVER P.T. WOOD SLEEPERS TAPPERED TO DRAIN OVER PLY-DEK ICC-ES ESR-2097 SYSTEM OVER 3/4" MARINE PLYWOOD DECK SHEATHING OVER FLOOR FRAMING (SEE STRUCTURAL) MIN. 1/8" SLOPE TO DRAIN
12. **TYPICAL EXTERIOR WALL CONSTRUCTION** (R-VALUE: R25) 1
    3 COAT SMOOTH FINISH STUCCO OR 1X3 CHICHIPATE CHANEL GROOVE SIDING OVER 1 1/2" RIGID WALL INSULATION OVER 2 LAYERS OF GRADE D PAPER (CRC R703.6.3) OVER PLWOOD SHEAR (SEE STRUCTURAL) OVER 2X6 STUDS AT 16" O.C. WITH BATT INSULATION FULL THICKNESS AND 1/2" GYP. BRD. AT INTERIOR WITH LEVEL 4 MUD AND PAINT (NO RIGID INS. AT GARAGE)
13. **TYPICAL INTERIOR WALL CONSTRUCTION** (R-VALUE: R19) 1
    5/8" GYP. BRD. W/ LEVEL 4 FINISH EITHER SIDE OF 2X4'S AT 16" O.C. (SOUND BATT AT ALL BEDROOMS)

    TYPICAL ACCENT TILE WALL CONSTRUCTION (R-VALUE: R25) 1
    CONC. /STONE TILE (SEE ARCHITECT) (EXT.) OVER PLYWOOD SHEAR (SEE STRUCTURAL) OVER 2X6 STUDS AT 16" O.C. WITH BATT INSULATION FULL THICKNESS AND 1/2" DENS SHEILD. AT INTERIOR WITH CONC. TILE (SEE ARCHITECT) WALL COPING AT ROOF TOP WITH COPING STONE OVER ROOF MEMBRANE AND TURNDOWNS/COUNTER FLASHING AS PER MANF. REQ'S.
14. AIRTIGHT SPRAY FOAM OPEN CELL INSULATION
15. FOUNDATION WATER PROOFING AND DRAINAGE SEE SPEC
16. STONE TILE SEE ARCHITECT
17. NON-COMBUSTABLE SOFFIT BOARD MANF. JAMES HARDIE HardieSoffit® (STATE FIRE MARSHALL APPROVED LISTING #: 8160-2026:0007)
18. DUAL GLAZED FRAMELESS GLASS W/ SOLAR BAN 70 AND LOW E

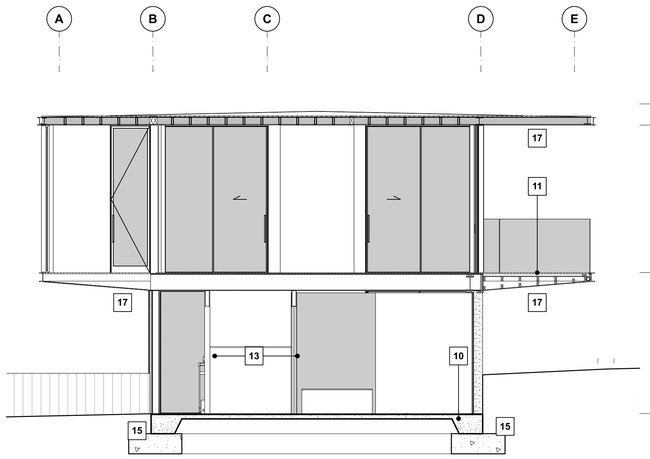

2 A4.1 CROSS-SECTION AT BREAKFAST ROOM/KITCHEN

SCALE: 3/16" = 1'-0"

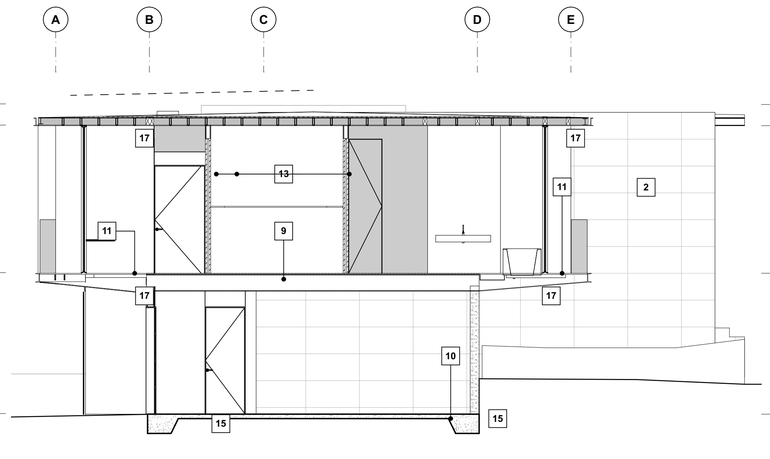

1 A4.1 CROSS-SECTION AT MASTER CLOSET/MASTERBATH

SCALE: 3/16" = 1'-0"

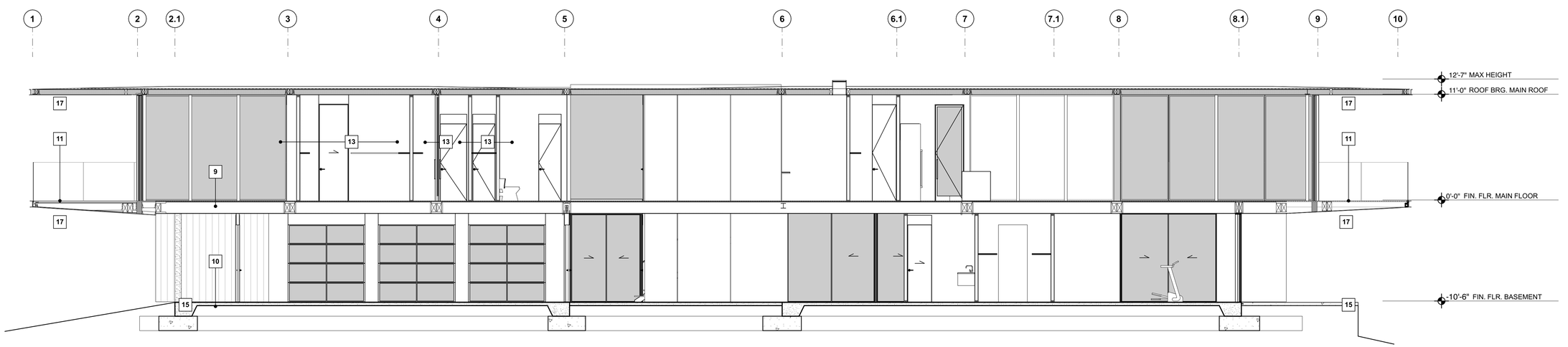

3 A4.1 LONGITUDINAL CROSS-SECTION

SCALE: 3/16" = 1'-0"

THESE DRAWINGS ARE THE ORIGINAL UNPUBLISHED WORK OF THE ARCHITECT AND MAY NOT BE DUPLICATED, USED OR DISCLOSED WITHOUT THE WRITTEN PERMISSION OF THE ARCHITECT.
Curt Cline
MODERN HOUSE

MODERN HOUSE
ARCHITECTURE & DESIGN
1265 Indiana Street
San Francisco Ca. 94107
P. 415.800.8520
C. 415.596.7281
modernhouse@mac.com
www.modernhousearchitects.com

LICENSED ARCHITECT CURTIS C. CLINE C26383 6.30.21 RENEWAL DATE STATE OF CALIFORNIA

Curt Cline Architect

BUILDING PERMIT REVIEW

029-35-005

PANGAN RESIDENCE

AUGUSTA CT
MILPITAS, CA

Revisions:

1	BUILDING COMMENTS 11/29/2018

BUILDING SECTIONS

SCALE : AS NOTED

DATE : 07.26.2018

SHEET : **A4.1**

FILE PATH: /Users/modernidesignco/Dropbox/000 ARCHICAD FILES/Pangan Arch/CAD/PANGEN_BUILDING_Comments2_10062020.pln • LAST SAVED BY: Modern House - Natsumi • PRINTED ON 4/27/21 @ 3:28 PM
PROJECT COMPANY • PANGAN RESIDENCE • *** PROJECT NUMBER *** • AS.1

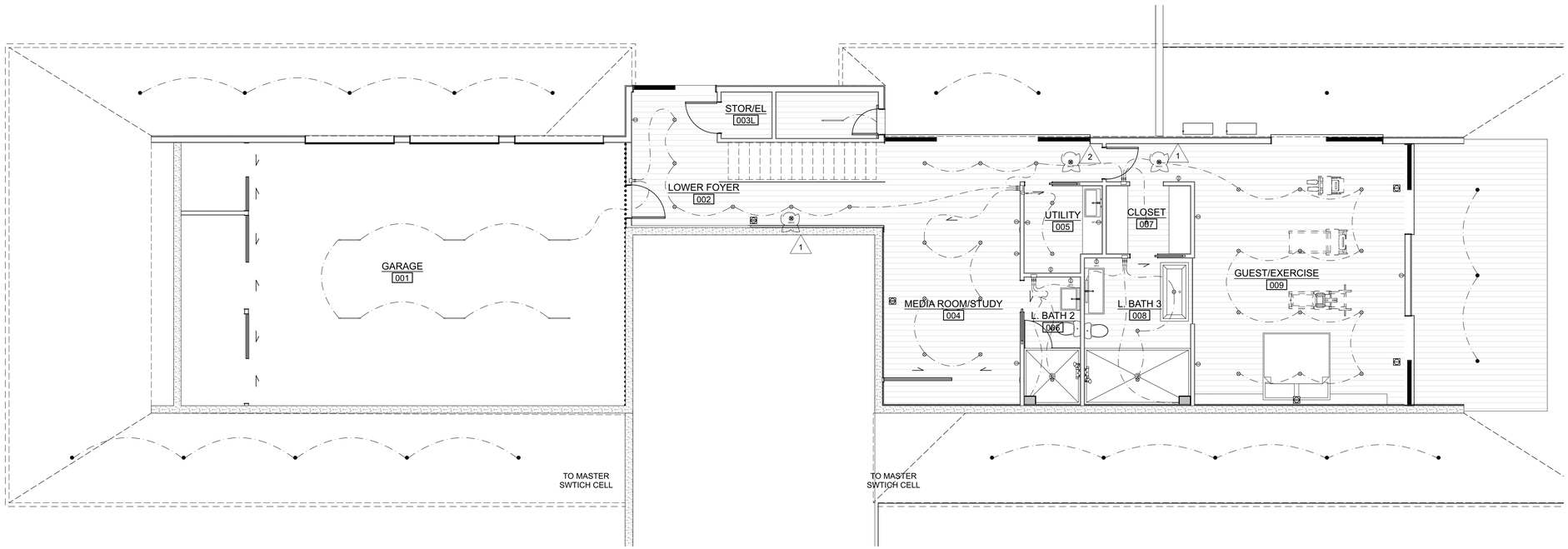

1 A5.1 RCP/LIGHTING PLAN AT GROUND FLOOR

SCALE: 3/16" = 1'-0"

NOTES - REFL. CLG. PLAN:

-- ALL CEILING HEIGHTS ARE TO UNDERSIDE OF FRAMING, U.O.N.

-- CONTRACTOR TO COORDINATE ALL LIGHTING LOCATIONS w/ FRAMING PLANS

-- ALL DIMENSIONS FOR LIGHTING ARE FROM THE FACE OF FINISH

-- ALL LIGHTING IN GARAGES, LAUNDRY ROOMS, AND UTILITY ROOMS SHALL BE HE LUMINARIES AND CONTROLLED BY VACANCY SENSORS. I.E. MANUAL ON, AUTOMATIC OFF.

-- SMOKE DETECTORS SHALL RECEIVE THEIR PRIMARY POWER FROM THE BUILDING WIRING AND SHALL BE EQUIPPED WITH A BATTERY BACKUP AND EMIT A SIGNAL WHEN THE BATTERY IS LOW. WIRING SHALL BE PERMANENT AND WITHOUT A DISCONNECTING SWITCH OTHER THAN AS REQUIRED FOR OVER CURRENT PROTECTION. WHERE MORE THAN ONE SMOKE ALARM IS REQUIRED TO BE INSTALLED THEY SHALL BE INTERCONNECTED IN SUCH A MANNER THAT THE ACTIVATION OF ONE ALARM WILL ACTIVATE ALL THE ALARMS IN THE INDIVIDUAL UNIT. CRC R314.5

-- AN APPROVED CARBON MONOXIDE ALARM SHALL BE INSTALLED IN DWELLING UNITES AND SLEEPING UNITS WITHIN WHICH FUEL-BURNING APPLIANCES ARE INSTALLED AND IN DWELLING UNITS THAT HAVE ATTACHED GARAGES. CO ALARMS SHALL BE INSTALLED OUTSIDE OF EACH SEPARATE DWELLING UNIT SLEEPING AREA IN IMMEDIATE VICINITY OF THE BEDROOM(S) AND ON EVERY LEVEL OF A DWELLING UNIT, INCLUDING BASEMENTS. CARBON MONOXIDE ALARMS SHALL RECEIVED THEIR PRIMARY POWER FROM THE BUILDING WIRING AND SHALL BE EQUIPPED WITH A BATTERY BACKUP. WIRING SHALL BE PERMANENT AND WITHOUT A DISCONNECTING SWITCH OTHER THAN REQUIRED FOR OVERCURRENT PROTECTION. WHERE MORE THAN ONE CARBON MONOXIDE ALARM IS REQUIRED TO BE INSTALLED THEY SHALL BE INTERCONNECTED IN SUCH A MANNER THAT THE ACTIVATION OF ONE ALARM WILL ACTIVATE ALL OF THE ALARMS IN THE INDIVIDUAL UNIT. CRC R315.1, R315.1.1 AND R315.1.2

-- **GARAGES, LAUNDRY ROOMS, AND UTILITY ROOMS:** ALL LUMINAIRES MUST BE HIGH EFFICACY, AND MUST BE CONTROLLED BY A VACANCY SENSOR.

-- **OTHER ROOMS:** THIS CLASSIFICATION APPLIES ONLY TO ROOMS THAT ARE NOT KITCHENS, BATHROOMS, GARAGES, LAUNDRY ROOMS, CLOSETS, OR UTILITY ROOMS. ALL INSTALLED LUMINAIRES SHALL EITHER BE HIGH EFFICACY OR SHALL BE CONTROLLED BY A VACANCY SENSOR OR DIMMER. CLOSETS THAT ARE LESS THAN 70 FT2 ARE EXEMPT FROM THIS REQUIREMENT.

-- FOR A ONE FAMILY DWELLING AND EACH UNIT OF A TWO-FAMILY DWELLING THAT IS AT GRADE LEVEL, AT LEAST ONE RECEPTACLE OUTLET ACCESSIBLE WHILE STANDING AT GRADE LEVEL AND LOCATED NOT MORE THAN 6'-6"ABOVE GRADE SHALL BE INSTALLED AT THE FRONT AND BACK OF THE DWELLING. CEC

LIGHTING /ELECTRICAL SCHEDULE 1

If Switching is not Indicated put on Photo Cell
W/ Master Switch as Shown

A		(EXTERIOR) GROUND STAKE UP (HIGH EFFICACY)
B		(EXTERIOR) RECESSED SOFFIT LIGHT (HIGH EFFICACY)
C		(EXTERIOR) TRELLIS LIGHT (HIGH EFFICACY)
D		RECESSED CEILING LIGHT (HIGH EFFICACY)
E		RECESSED CEILING LIGHT FIXTURE SLOT TRIM (HIGH EFFICACY)
F		RECESSED LED FIXTURE (MULTI SPOT) (HIGH EFFICACY)
G		SURFACE MNT. FLUORESCENT (HIGH EFFICACY)
H		VANITY LIGHT (HIGH EFFICACY)
I		LED STRIP LIGHT (HIGH EFFICACY)
J		EXHAUST FAN

INTERIOR SWITCH/OUTLET

1		Rheostat Switch
2		Rheostat Switch/Motion Sensors in Bathrooms
3		Duplex Outlet (+14" AFF U.N.O.)
4		Outlet 220
5		GFCI Water Proof Outlet AS PER (CEC 210.8 A)
6		GFCI PROTECTED AS PER CEC 210.8 A)
7		Floor Duplex Outlet
		SMOKE & CARBONMONOXCIDE DETECTOR PERMANENTLY WIRED WITH BATTERY BACKUP. SECTION R315
		ASHRAE 62.2 AND CEC SECTION 150 (0) COMPLIANT KITCHEN EXHAUST FAN

ALL 125-VOLT, 15 AND 20 AMPERE RECEPTACLE OUTLETS SHALL BE LISTED TAMPER RESISTANT RECEPTACLES CEC 406.11

ALL BRANCH CIRCUITS THAT SUPPLY 120 VOLT, SINGLE PHASE, 15 AND 20 AMPRE OUTLETS INSTALLED IN DWELLING FAMILY ROOMS, DINING ROOMS, LIVING ROOMS, PARLORS, LIBRARIES, DENS, BEDROOMS, SUNROOMS, RECREATION ROOMS, CLOSETS HALLWAYS OR SIMILAR ROOMS SHALL BE ARC-FAULT CIRCUIT INTERRUPTER (AFCI)PROTECTED AS PER CEC 210.12(B)

-Manual Shades
Manf.: SKYCO See Architect for Color
-L.V. Powered Shades
Manf.: LUTRON QED See Architect for Color

MODERN HOUSE
ARCHITECTURE & DESIGN
1265 Indiana Street
San Francisco Ca. 94107
P. 415.800.8520
C. 415.596.7281
modernhouse@mac.com
www.modernhousearchitects.com

LICENSED ARCHITECT CURTIS C CLINE C26383 6.30.21 RENEWAL DATE STATE OF CALIFORNIA

Curt Cline Architect

BUILDING PERMIT REVIEW

029-35-005

PANGAN RESIDENCE

AUGUSTA CT
MILPITAS, CA

Revisions:

1 BUILDING COMMENTS 11/29/2018
2 BUILDING COMMENTS 9/16/2020

RCP/LIGHTING PLAN GROUND FLOOR

SCALE : AS NOTED

DATE : 07.26.2018

SHEET : **A5.1**

THESE DRAWINGS ARE THE ORIGINAL UNPUBLISHED WORK OF THE ARCHITECT AND MAY NOT BE USED OR DISCLOSED WITHOUT THE WRITTEN PERMISSION OF THE ARCHITECT.
©MODERN HOUSE

FILE PATH: /Users/modernhouse/Dropbox/000 ARCHICAD FILES/Pangan Arch/CAD/PANGEN_BUILDING_Comments2_10062020.pln • LAST SAVED BY: Modern House - Natsumi • PRINTED ON 4/27/21 @ 3:28 PM
PROJECT COMPANY • PANGAN RESIDENCE • *** PROJECT NUMBER *** • A5.2

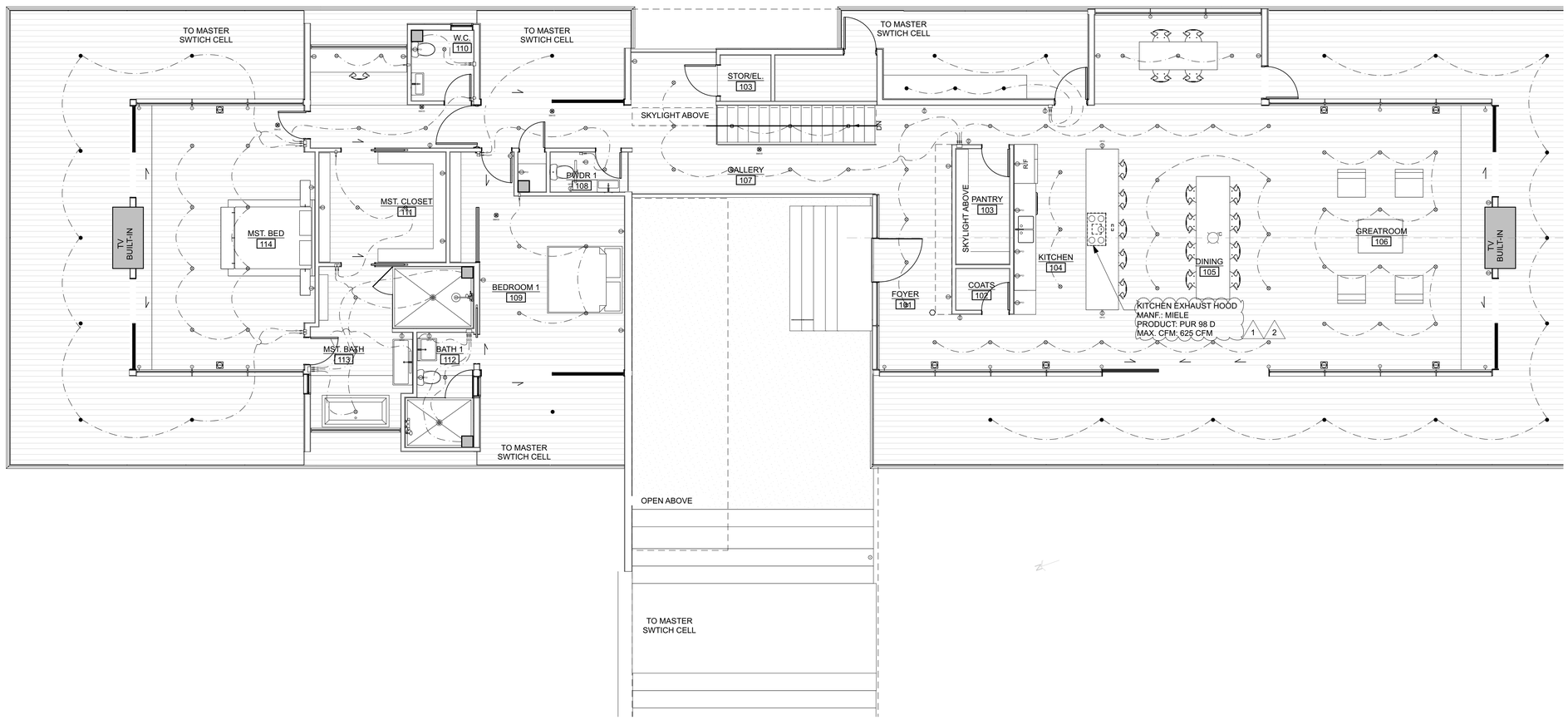

1 A5.2 RCP/LIGHTING PLAN AT MAIN FLOOR

SCALE: 3/16" = 1'-0"

NOTES - REFL. CLG. PLAN:

-- ALL CEILING HEIGHTS ARE TO UNDERSIDE OF FRAMING, U.O.N.

-- CONTRACTOR TO COORDINATE ALL LIGHTING LOCATIONS w/ FRAMING PLANS

-- ALL DIMENSIONS FOR LIGHTING ARE FROM THE FACE OF FINISH

-- ALL LIGHTING IN GARAGES, LAUNDRY ROOMS, AND UTILITY ROOMS SHALL BE HE LUMINARIES AND CONTROLLED BY VACANCY SENSORS. I.E. MANUAL ON, AUTOMATIC OFF.

-- SMOKE DETECTORS SHALL RECEIVE THEIR PRIMARY POWER FROM THE BUILDING WIRING AND SHALL BE EQUIPPED WITH A BATTERY BACKUP AND EMIT A SIGNAL WHEN THE BATTERY IS LOW. WIRING SHALL BE PERMANENT AND WITHOUT A DISCONNECTING SWITCH OTHER THAN AS REQUIRED FOR OVER CURRENT PROTECTION. WHERE MORE THAN ONE SMOKE ALARM IS REQUIRED TO BE INSTALLED THEY SHALL BE INTERCONNECTED IN SUCH A MANNER THAT THE ACTIVATION OF ONE ALARM WILL ACTIVATE ALL THE ALARMS IN THE INDIVIDUAL UNIT. CRC R314.5

-- AN APPROVED CARBON MONOXIDE ALARM SHALL BE INSTALLED IN DWELLING UNITES AND SLEEPING UNITS WITHIN WHICH FUEL-BURNING APPLIANCES ARE INSTALLED AND IN DWELLING UNITS THAT HAVE ATTACHED GARAGES. CO ALARMS SHALL BE INSTALLED OUTSIDE OF EACH SEPARATE DWELLING UNIT SLEEPING AREA IN IMMEDIATE VICINITY OF THE BEDROOM(S) AND ON EVERY LEVEL OF A DWELLING UNIT, INCLUDING BASEMENTS. CARBON MONOXIDE ALARMS SHALL RECEIVED THEIR PRIMARY POWER FROM THE BUILDING WIRING AND SHALL BE EQUIPPED WITH A BATTERY BACKUP. WIRING SHALL BE PERMANENT AND WITHOUT A DISCONNECTING SWITCH OTHER THAN REQUIRED FOR OVERCURRENT PROTECTION. WHERE MORE THAN ONE CARBON MONOXIDE ALARM IS REQUIRED TO BE INSTALLED THEY SHALL BE INTERCONNECTED IN SUCH A MANNER THAT THE ACTIVATION OF ONE ALARM WILL ACTIVATE ALL OF THE ALARMS IN THE INDIVIDUAL UNIT. CRC R315.1, R315.1.1 AND R315.1.2

-- **GARAGES, LAUNDRY ROOMS, AND UTILITY ROOMS:** ALL LUMINAIRES MUST BE HIGH EFFICACY, AND MUST BE CONTROLLED BY A VACANCY SENSOR.

-- **OTHER ROOMS:** THIS CLASSIFICATION APPLIES ONLY TO ROOMS THAT ARE NOT KITCHENS, BATHROOMS, GARAGES, LAUNDRY ROOMS, CLOSETS, OR UTILITY ROOMS. ALL INSTALLED LUMINAIRES SHALL EITHER BE HIGH EFFICACY OR SHALL BE CONTROLLED BY A VACANCY SENSOR OR DIMMER. CLOSETS THAT ARE LESS THAN 70 FT2 ARE EXEMPT FROM THIS REQUIREMENT.

-- FOR A ONE FAMILY DWELLING AND EACH UNIT OF A TWO-FAMILY DWELLING THAT IS AT GRADE LEVEL, AT LEAST ONE RECEPTACLE OUTLET ACCESSIBLE WHILE STANDING AT GRADE LEVEL AND LOCATED NOT MORE THAN 6'-6"ABOVE GRADE SHALL BE INSTALLED AT THE FRONT AND BACK OF THE DWELLING. CEC

LIGHTING /ELECTRICAL SCHEDULE 1

If Switching is not Indicated put on Photo Cell
W/ Master Switch as Shown

A		(EXTERIOR) GROUND STAKE UP (HIGH EFFICACY)
B		(EXTERIOR) RECESSED SOFFIT LIGHT (HIGH EFFICACY)
C		(EXTERIOR) TRELLIS LIGHT (HIGH EFFICACY)
D		RECESSED CEILING LIGHT (HIGH EFFICACY)
E		RECESSED CEILING LIGHT FIXTURE SLOT TRIM (HIGH EFFICACY)
F		RECESSED LED FIXTURE (MULTI SPOT) (HIGH EFFICACY)
G		SURFACE MNT. FLUORESCENT (HIGH EFFICACY)
H		VANITY LIGHT (HIGH EFFICACY)
I		LED STRIP LIGHT (HIGH EFFICACY)
J		EXHAUST FAN

INTERIOR SWITCH/OUTLET

1		Rheostat Switch
2		Rheostat Switch/Motion Sensors in Bathrooms
3		Duplex Outlet (+14" AFF U.N.O.)
4		Outlet 220
5	GFCI	GFCI Water Proof Outlet AS PER (CEC 210.8 A)
6	GFCI	GFCI PROTECTED AS PER CEC 210.8 A)
7		Floor Duplex Outlet
	SD / CM	SMOKE & CARBONMONOXCIDE DETECTOR PERMANENTLY WIRED WITH BATTERY BACKUP. SECTION R315
		ASHRAE 62.2 AND CEC SECTION 150 (0) COMPLIANT KITCHEN EXHAUST FAN

ALL 125-VOLT, 15 AND 20 AMPERE RECEPTACLE OUTLETS SHALL BE LISTED TAMPER RESISTANT RECEPTACLES CEC 406.11

ALL BRANCH CIRCUITS THAT SUPPLY 120 VOLT, SINGLE PHASE, 15 AND 20 AMPRE OUTLETS INSTALLED IN DWELLING FAMILY ROOMS, DINING ROOMS, LIVING ROOMS, PARLORS, LIBRARIES, DENS, BEDROOMS, SUNROOMS, RECREATION ROOMS, CLOSETS HALLWAYS OR SIMILAR ROOMS SHALL BE ARC-FAULT CIRCUIT INTERRUPTER (AFCI)PROTECTED AS PER CEC 210.12(B)

-Manual Shades
Manf.: SKYCO See Architect for Color
-L.V. Powered Shades
Manf.: LUTRON QED See Architect for Color

MODERN HOUSE
ARCHITECTURE & DESIGN
1265 Indiana Street
San Francisco Ca. 94107
P. 415.800.8520
C. 415.596.7281
modernhouse@mac.com
www.modernhousearchitects.com

LICENSED ARCHITECT CURTIS C. CLINE C26383 6.30.21 RENEWAL DATE STATE OF CALIFORNIA

Curt Cline Architect

BUILDING PERMIT REVIEW

029-35-005

PANGAN RESIDENCE
AUGUSTA CT
MILPITAS, CA

Revisions:

1 BUILDING COMMENTS 11/29/2018
2 BUILDING COMMENTS 9/16/2020

RCP/LIGHTING PLAN MAIN FLOOR

SCALE : AS NOTED
DATE : 07.26.2018
SHEET : **A5.2**

THESE DRAWINGS ARE THE ORIGINAL UNPUBLISHED WORK OF THE ARCHITECT AND MAY NOT BE DUPLICATED OR USED WITHOUT THE WRITTEN PERMISSION OF THE ARCHITECT.
© CURTIS CLINE
© MODERN HOUSE

FILE PATH: /Users/moderndesignco/Dropbox/000 ARCHICAD FILES/Pangan ArchiCAD/PANGEN_BUILDING_Comments2_10062020.pln • LAST SAVED BY: Modern House - Natsumi • PRINTED ON 4/27/21 @ 3:28 PM
PROJECT COMPANY • PANGAN RESIDENCE • *** PROJECT NUMBER *** • A5.3

Designer wallplate opening | **Diva®** dimmers and fan controls



Shown actual size: Diva preset dimmer and 1-gang Claro wallplate in White (WH).

Product family features

- Large paddle switch with a captive linear-slide dimmer for a standard designer wallplate opening
- Preset dimmer
- Select lighter color models feature built-in soft-glow locator light
- C•L® model available—see pg. 01 for details
- eco-dim® model available
- 1000W preset dimmers have voltage compensation, which maintains stable light levels, despite line voltage variations
- Coordinating Claro®, Satin Colors®, and Stainless Steel wallplates only available separately
- Custom engraving available for wallplates; see pg. 164

Control types

Single-pole (one location)
3-way or 4-way (two or more locations)

Direct load type compatibility

Incandescent/halogen lighting
Dimmable CFL/LED lighting (screw-base)
Magnetic low-voltage lighting
Electronic low-voltage lighting
Fluorescent lighting
LED lighting
Ceiling fans

Load type requiring load interface

Neon/cold cathode lighting

Lighting load interfaces may be applicable for some additional load type, voltage, and capacity combinations.
For additional information, see pg. 185.

Download Diva specification submittal
Download Diva C•L specification submittal
Download high resolution product image

81 Volume 1 P/N 367-1746 REV B www.lutron.com/specificationguide | 1.800.523.9466 | LUTRON.

Switch Type 1 Manf. Lutron

Fin. Trim White

STANDARD STRIP HIGH / VERY HIGH OUTPUT **SD STRIP HO/VO**

Page 1 of 2 4-1/8" WIDE x 2-3/4" DEEP x 48", 96", 192" LENGTHS, 1 OR 2 LAMP, T8 OR T12, HO OR VHO

Features

- Fixtures suitable for individual, row, surface, or suspension mounting.
- Efficiency 92.3% (T12).
- Quarter turn latch secures channel cover for easy wireway access.
- Heavy duty channel of code gauge die formed steel.
- Fully enclosed wiring.
- UL Listed snap-on end caps.
- Combination end cap for continuous row mounting.
- Green grounding screw installed in channel.
- Lampholders may be individually replaced or rewired.
- T8 (380mA) and T12 (800mA) standard fixtures include ballasts rated for –20°F starting temperature.



DIMENSIONS

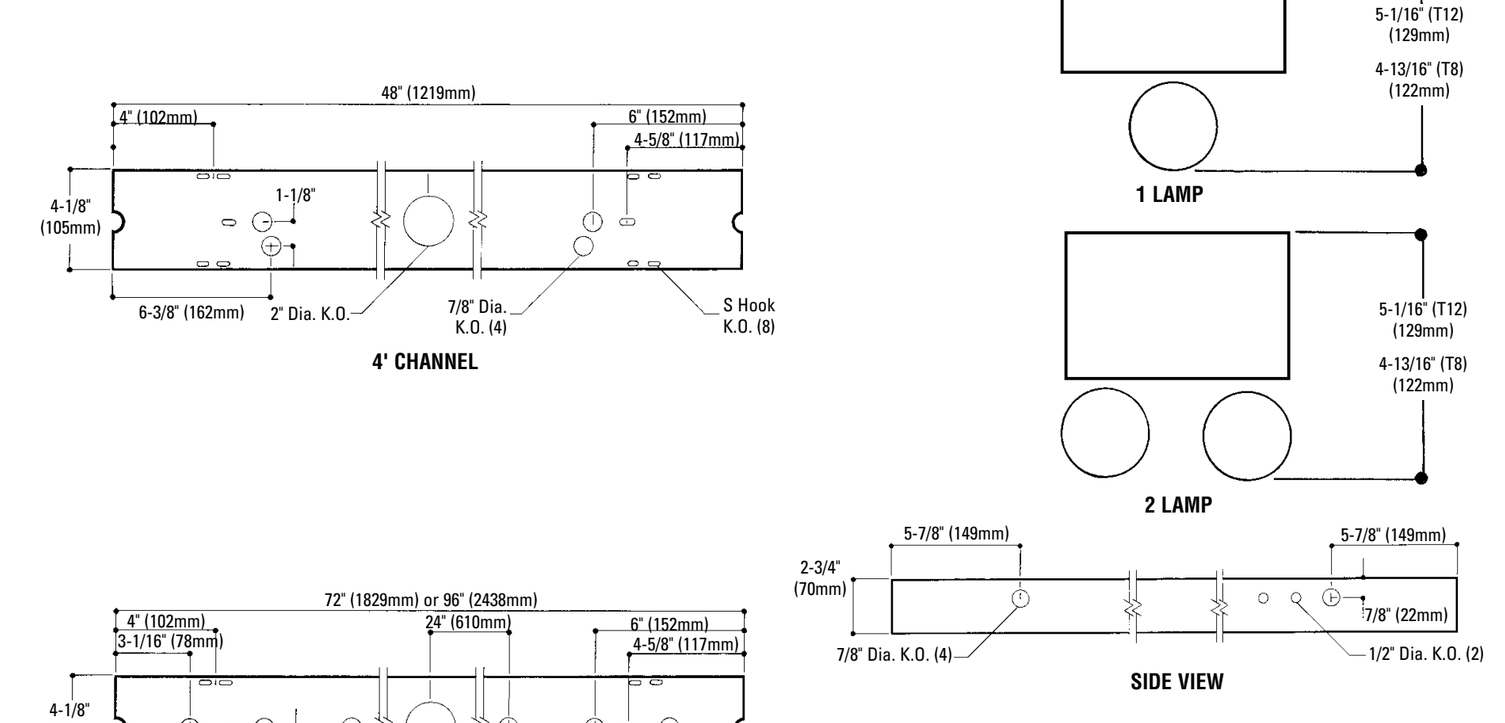

Job Information	Type:
Job Name:	
Cat. No.:	
Lamp(s):	
Volts/Ballast:	

Lightolier a Genlyte Thomas Company www.lightolier.com
Technical Information: (978) 657-7600 • Fax (978) 658-0595
631 Airport Road, Fall River, MA 02720 • (508) 679-8131 • Fax (508) 674-4710
We reserve the right to change details of design, materials and finish.
© 2002 Genlyte Thomas Group LLC (Lightolier Division)
A0902 Section 3A/Folio H100-50

LIGHTOLIER®

Light Type G Manf. Lightolier

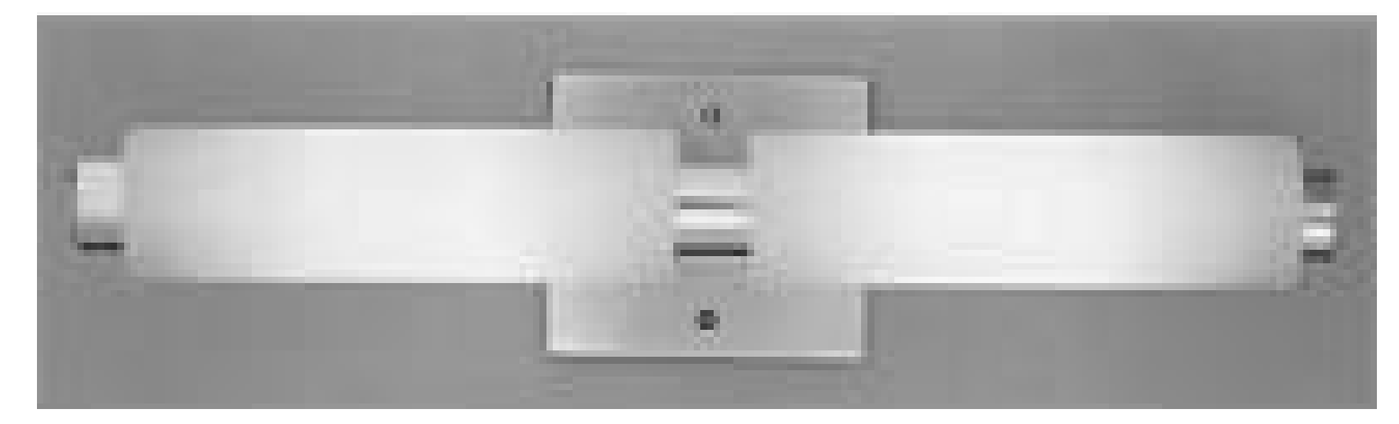

IEQ–HALBATH2

ALL BATH/POWDER ROOMS EXCEPT MASTER BED

Light Type E Manf. Y Lighting

Fin. Brushed Nickel/
Frosted Lens

Length 10" (2) Lamp

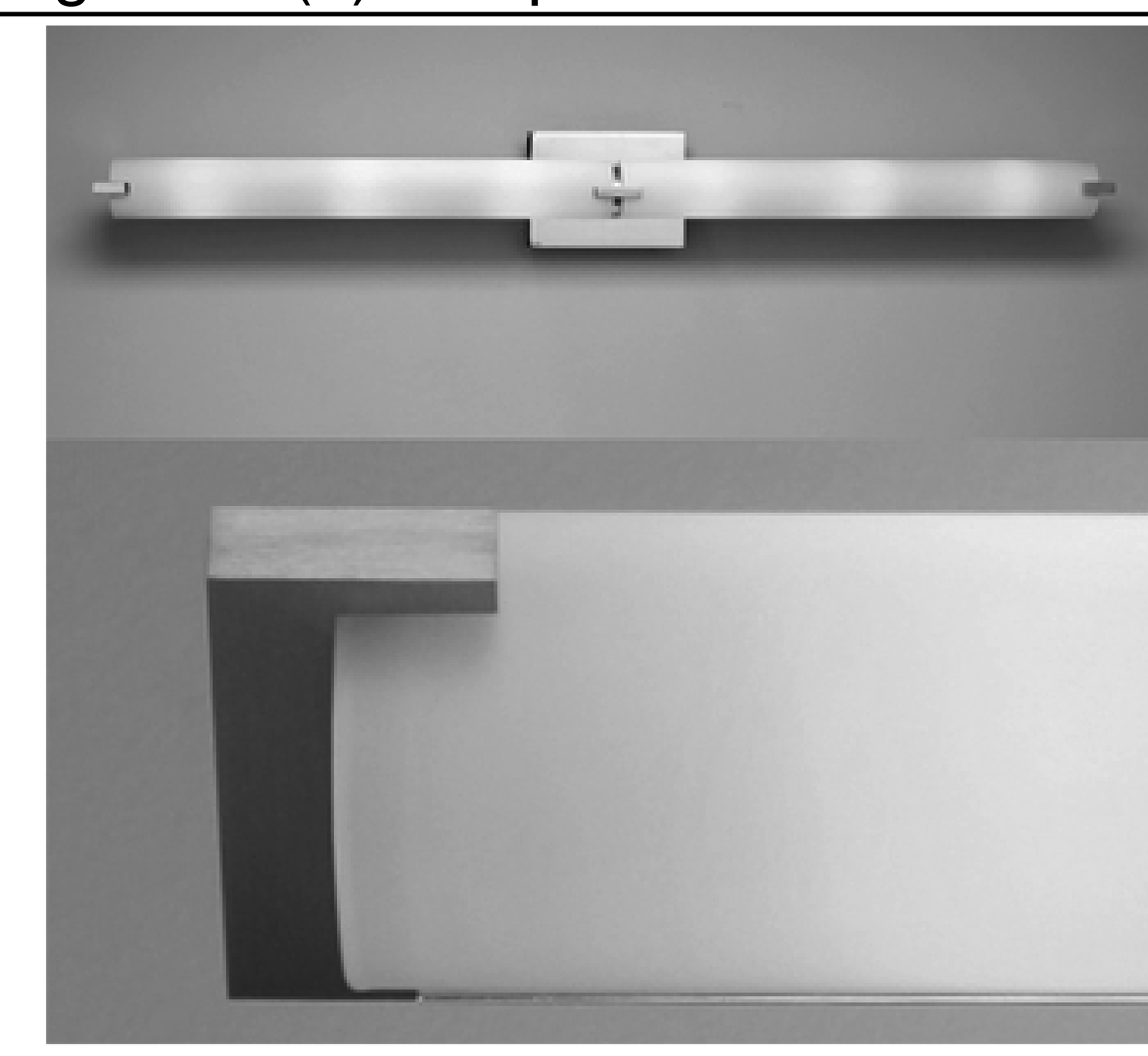

MASTER BATHROOM 117
Name: Elf 3

Fin. Brushed Nickel/
Frosted Lens
Length 40" (6) Lamp

Light Type E Manf. Y Lighting

Light Type C Pendant Fixture
See architect

HALO

DESCRIPTION - H4 LED DOWNLIGHT TRIMS - UPDATE

Halo H4 LED family consists of 4" recessed downlights with EL4 Series LED Light Engines and TL4 and TLS4 Series LED Trims designed for installation in H4 LED series housings with integral LED dimmable drivers. Halo LED Downlight Trims are offered in lensed baffles and reflectors; and wet location shower rated models. TL4 and TLS4 Series LED Trims are compatible with 1st Gen - EL4058x and 2nd Gen - EL4069x downlight LED light engines. Halo LED offers high quality, fit, finish, and performance in an energy-efficient, high-efficacy downlight.

Catalog #		Type
Project		
Comments		Date
Prepared by		

SPECIFICATION FEATURES

MECHANICAL

Baffles and Reflectors

- Precision formed aluminum
- Reflector Finishes offered in White, Specular Clear, Haze, Specular Black, Satin Nickel, and Tuscan Bronze
- Baffle Finishes offered in White and Black

Trim Rings

- Durable die-cast aluminum
- Precision keyed slots designed to lock with matching keyed bosses in H4 LED Light Engine
- Works with LED Light Engine's heat sink to provide further thermal conduction away from the LED
- Standard finishes offered in White, Black, Satin Nickel, and Tuscan Bronze.
- Optional, thin profile designer trim rings offered in White, Black, Satin Nickel, Tuscan Bronze, and Polished Chrome finishes.
- Thin profile designer trim rings provide subtle ceiling appearance. Thickness dimensions: 0.120" at OD and 0.180" at ID.

FEATURES

- Superior optical design provides high lumen output, smooth beam distribution, and good visual comfort
- Precision design and materials for a high-quality fit and finish
- Multiple trim options allow Halo H4 LED recessed downlights to be used in a wide range of interior spaces
- High-quality standard and plated finishes
- Diffuse dome polymer lens models offer a familiar "bulb-like" appearance, and are impact resistant
- Solite® lensed trims offer high-clarity glass for high-lumen transmission along with a subtle diffusion of source brightness
- Solite® and Diffuse Dome Lensed models are UL/cUL listed for Wet Location, protected ceilings, and are IP66 Ingress Protection rated for dust and water
- Polymer shower trim features a non-electrically conductive plastic "dead front". One piece baffle and ring, and lens are formed from plastics - special polymers to meet Halo performance and quality standards.
- H4 LED trims offer ENERGY STAR® Qualification when used with designated Halo H4 LED Light Engines*
- Can be used to meet State of California Title 24 and International Energy Conservation Code – IECC High Efficacy requirements when used with designated LED Light Engines*

Warranty

Cooper Lighting provides a five year limited warranty on Halo LED Luminaires which includes the LED Recessed Housing, LED Light Engine, and LED trims. (Subject to all of the limitations set forth in Cooper Lighting Terms and Conditions of sale. Refer to www.cooperlighting.com.)



*Qualified & Compliant as designated with LED Light Engine and Trim. Refer to ENERGY STAR® Qualified Products List and CEC (T24) Appliance Database for listings.

H4 LED Downlight Trims

TL402, TL403, TL408, TL409, TL410, TL411, TL422

4-Inch LED Trims

FOR USE WITH 1st GEN EL4058xx AND 2ND GEN EL4069xx LED LIGHT ENGINES AND 1ST GEN H455, H456 SERIES AND 2ND GEN H457 SERIES 4" LED HOUSINGS

Complete fixture consists of LED Housing, LED Light Engine and LED trim.

High Efficacy LED

Trim:

SQUARE SOLITE® GLASS LENS BAFFLE TRIMS

Wet Location Listed For Shower Applications

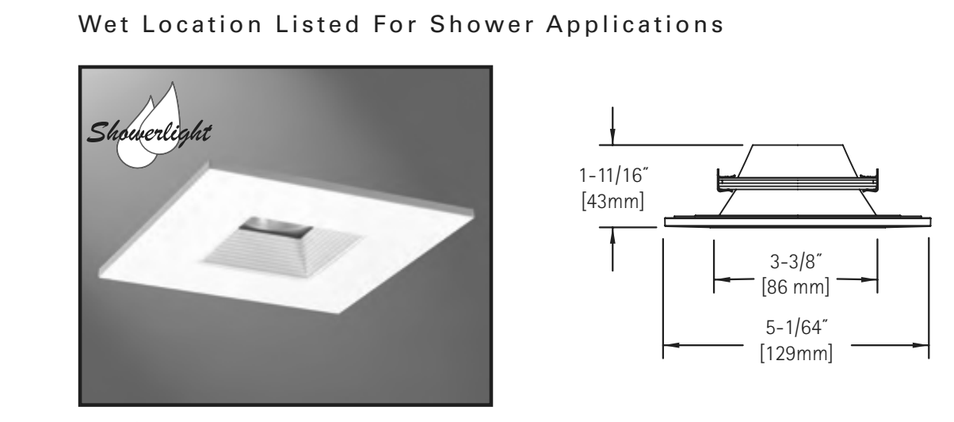

TLS408WHWB

Square Baffle Trim with Solite® Glass Lens, White Baffle, White Ring

Light Type A Manf. HALO

MODERN HOUSE

ARCHITECTURE & DESIGN
1265 Indiana Street
San Francisco Ca. 94107
P. 415.800.8520
C. 415.596.7281
modernhouse@mac.com
www.modernhousearchitects.com

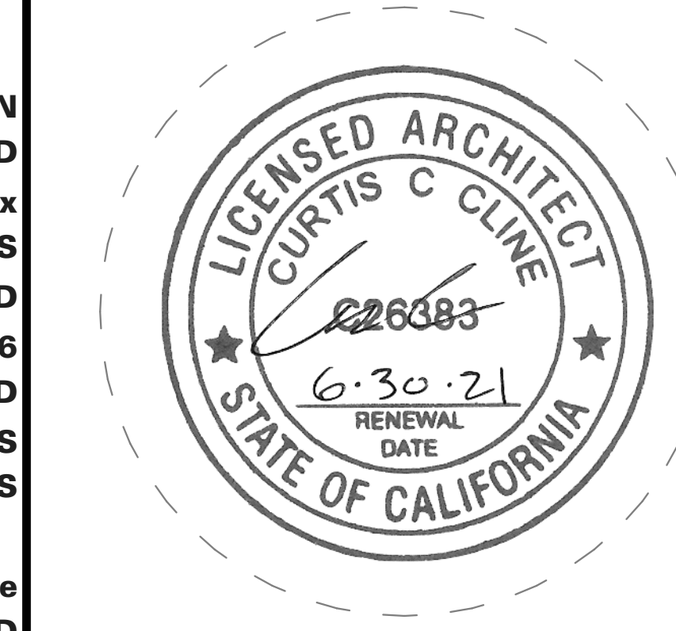

Curt Cline Architect

BUILDING PERMIT REVIEW
029-35-005
PANGAN RESIDENCE
AUGUSTA CT
MILPITAS, CA



LEVITON

PR150-1LW **Occupancy Sensors**

Brand Features

Leviton offers many products that will help lower electrical costs and add convenience to everyday living. The PR150 sensor automatically turns the lights ON when you enter a room and OFF when you leave. Infrared occupancy sensors are passive devices designed to detect the movement of heat-emitting bodies. They are installed to monitor areas where there are no physical obstructions to block the sensor's field of view. HOW IT WORKS: People naturally emit a small amount of infrared heat. As a person passes through the field of view, the sensor detects the motion as a change in the infrared background and responds by switching on area lights. After the field of view is unoccupied for a user-defined delayed off time, the sensor will automatically turn off the lights.

Item Description

40W/VA Min 500W 400VA Max, 120 Volt AC 60Hz, Single-Pole, 150 Degree, 350 Sq. Ft. Coverage, Decora Passive Infrared Wall Switch Occupancy Sensor, Residential Grade - White

Color: White

UPC Code: 06867919092
Country of Origin: China

Technical Information

Product Features
Switch Type: Single-Pole
Adjustment: Manual
Sensor Technology: Passive Infrared
Pattern Degrees: 150
Coverage (Sq.Ft.): 0350 Sq. Ft.
Time Adjustment: 15s-15m
Load Rating: 40W/VA Min 500W 400VA Max
Voltage: 120 Volt AC 60Hz
Neutral Wire Connection: Not Required
Photo Cell: Ambient Override ON
Color: White
Standards and Certifications: UL/CSA
Warranty: 2-Year Limited

Switch Type 2 Manf. Leviton

Fin. White

160 IAQ CFM PER CALIFORNIA ENERGY CODE 150.0(O), 150.2(A)1C AND ASHRAE 62.2 WITH 4" DUCT.

Panasonic

WhisperCeiling® DC™ Ventilation Fans and Fan/Lights



WhisperCeiling DC

Fan Only Models: FV-0511VQ1, FV-1115VQ1
Fan/Light Models: FV-0511VQL1, FV-1115VQL1



- Precision spot ventilation fans ideal for use in the bathroom, laundry room, sun room, basement or garage
- Revolutionary ECM motor with SmartFlow™ technology for optimum CFM output
- Pick-A-Flow Speed Selector (50-80-110 or 110-130-150 CFM models) combined with SmartFlow™ Technology simplifies the selection process and ensures optimum performance to meet code and reduce callbacks
- Flex-Z Fast™ bracket provides flexible, fast and easy installation, even from below the ceiling
- Lighted models incorporate one 10W dimmable LED chip panel with <1W LED night light for warm, long-life energy efficient illumination (night light must be wired separately)
- Elegant grille design compliments the aesthetics of any room
- Can be used to comply with ASHRAE 62.2, LEED, ENERGY STAR® IAP, EarthCraft, CA Title 24 and WA state code

ADDITIONAL BENEFITS

- Integrated 4" or 6" dual duct adapter enhances installation options
- UL listed for tub/shower enclosure when GFCI protected
- Built-in metal flange provides blocking for penetrations through drywall as an Air Barrier, and assists with the decrease in leakage in the Building Envelope during blower door testing
- Built-in damper reduces back drafting and helps with blower door testing
- UL listed for use with the Panasonic Ceiling Radiation Damper (model # PC-RD05C5)
- Warranty: 6 years ECM Motor, 5 years LED, 3 years all other parts

PRECISION VENTILATION
ENERGY STAR Most Efficient 2018 www.energystar.gov

WhisperCeiling DC (Specifications, part 1)

Specifications		FV-0511VQ1 (Fan Only)						FV-1115VQ1 (Fan Only)					
Characteristics (HVI tested data for 0.1" S.P.)	Static Pressure in inches w.g.	0.1	0.25	0.1	0.25	0.1	0.25	0.1	0.25	0.1	0.25	0.1	0.25
	Air Volume (CFM)	110	111	80	83	50	53	150	152	130	131	110	110
	Noise (sones)	<0.3	0.9	<0.3	0.6	<0.3	0.4	<0.3	0.7	<0.3	0.5	<0.3	<0.3
	Power Consumption (watts)	10.6	16.4	5.9	10.8	4.0	7.2	11.8	20.2	9.0	15.7	6.8	12.1
	Energy Efficiency (CFM/watt)	10.6	6.9	13.6	7.7	12.5	7.4	12.9	7.6	14.7	8.5	16.4	9.2
	Speed (RPM)	957	1239	821	1172	756	1093	698	925	671	918	636	900
	Current (amps)	0.18	0.26	0.11	0.18	0.07	0.13	0.19	0.31	0.16	0.25	0.12	0.20
	MAX. Current (amps)	0.27		0.27		0.27		0.31		0.31		0.31	
	Power Rating (V/Hz)	120/60		120/60		120/60		120/60		120/60		120/60	
Specifications	Motor Type	ECM		ECM		ECM		ECM		ECM		ECM	
	Type of Motor Bearing	Ball		Ball		Ball		Ball		Ball		Ball	
	Thermal Fuse Protection	Yes		Yes		Yes		Yes		Yes		Yes	
	Blower Wheel Type	Sirocco		Sirocco		Sirocco		Sirocco		Sirocco		Sirocco	
	ENERGY STAR Qualified	Yes		Yes		Yes		Yes		Yes		Yes	
Installation	Duct Diameter (inches)	4" or 6"		4" or 6"		4" or 6"		6"		6"		6"	
	Mounting Opening (inches sq.)	10-1/2		10-1/2		10-1/2		10-1/2		10-1/2		10-1/2	
	Grille Size (inches)	13		13		13		13		13		13	

WhisperCeiling DC (Specifications, part 2)

Specifications		FV-0511VQL1 (Fan/Light)						FV-1115VQL1 (Fan/Light)					
Characteristics (HVI tested data for 0.1" S.P.)	Static Pressure in inches w.g.	0.1	0.25	0.1	0.25	0.1	0.25	0.1	0.25	0.1	0.25	0.1	0.25
	Air Volume (CFM)	110	110	80	83	50	50	150	144	130	131	110	110
	Noise (sones)	0.4	0.9	<0.3	0.6	<0.3	0.4	0.5	0.8	<0.3	0.7	<0.3	0.5
	Power Consumption (watts)	10.9	16.1	6.0	11.0	3.9	7.1	13.0	19.3	10.3	17.0	7.7	12.8
	Energy Efficiency (CFM/watt)	10.3	7.0	13.7	7.7	14.1	7.8	11.7	7.5	12.8	7.8	14.5	8.7
	Speed (RPM)	1016	1268	867	1185	768	1097	740	958	722	949	679	935
	Current (amps)	0.18	0.26	0.11	0.19	0.07	0.12	0.21	0.30	0.17	0.27	0.13	0.22
	MAX. Current (amps)	0.30		0.30		0.30		0.30		0.30		0.30	
	Power Rating (V/Hz)	120/60		120/60		120/60		120/60		120/60		120/60	
Specifications	Motor Type	ECM		ECM		ECM		ECM		ECM		ECM	
	Type of Motor Bearing	Ball		Ball		Ball		Ball		Ball		Ball	
	Thermal Fuse Protection	Yes		Yes		Yes		Yes		Yes		Yes	
	Blower Wheel Type	Sirocco		Sirocco		Sirocco		Sirocco		Sirocco		Sirocco	
	ENERGY STAR Qualified	Yes		Yes		Yes		Yes		Yes		Yes	
Installation	Duct Diameter (inches)	4" or 6"		4" or 6"		4" or 6"		6"		6"		6"	
	Mounting Opening (inches sq.)	10-1/2		10-1/2		10-1/2		10-1/2		10-1/2		10-1/2	
	Grille Size (inches)	13		13		13		13		13		13	

Exhaust Fan Type H Manf. Panasonic

Fin. White (2)

HALO

DESCRIPTION

Ideal for task, accent, office, cove, and utility, under and above cabinet lighting display, the Halo Undercabinet low-profile design delivers maximum energy savings and life with easy installation. The integrated driver design allows 120V direct to the fixture for easy installation. Fixtures are available in 9", 18", 24", 36" and 48" lengths, the Halo system can be configured to fit almost anywhere. Each unit has an integrated on-off switch. Smooth dimming down to 5% using a standard dimmer*. Combination of direct wire to the fixture and connector cables provide for installation flexibility. Minimum Color Rendering Index (CRI) of 90 in 2700K, 3000K and 4000K color temperatures.

Catalog #		Type
Project		
Comments		Date
Prepared by		

SPECIFICATION FEATURES

Even Light Distribution
Specialized optical system consisting of tightly clustered proximity phosphor LEDs, advanced optical chamber coatings and lens materials resulting in soft illumination with very high efficiency. These fixtures are ideal for task lighting over glossy surfaces with no distracting shadow patterns.

Wiring Flexibility
Use any combination of three different wiring methods: Bring flexible conduit or Romex directly to either end of any size fixture. Conduit connector and romex strain relief hardware is included with each fixture. Utilize the available plug in connectors (sold separately) to link additional fixtures to the circuit or continue with flex conduit or romex (See instructions sheets for more detail).

Durable Low Profile Housing
Heavy gauge aluminum housing and color matched end caps with a 3/4" overall height.

Two Fastener Mounting
Each unit is secured directly to the mounting surface with just two fasteners keeping installation costs low. Can be mounted in horizontal and vertical orientations.

Continuous Runs
Link any combination of fixtures up to 450 W total load using available connectors.

Optional Accessories
Optional splice box has a connection port on each side to allow for runs in either or both directions. Includes Romex/ ½" conduit connector. Various connector cable options provide flexibility of mounting location.

Finish Options
Fixtures and accessories are available in both White (P) and Matte Black (MB) finishes.

Electronic Driver
Electronic driver provides full light output, flicker free and noise free operation.

Labels
- cULus listed
- Can be used to meet IECC, ASHRAE commercial and residential standards
- ENERGY STAR® qualified
- FCC



HU10

Integrated Driver LED Undercabinet

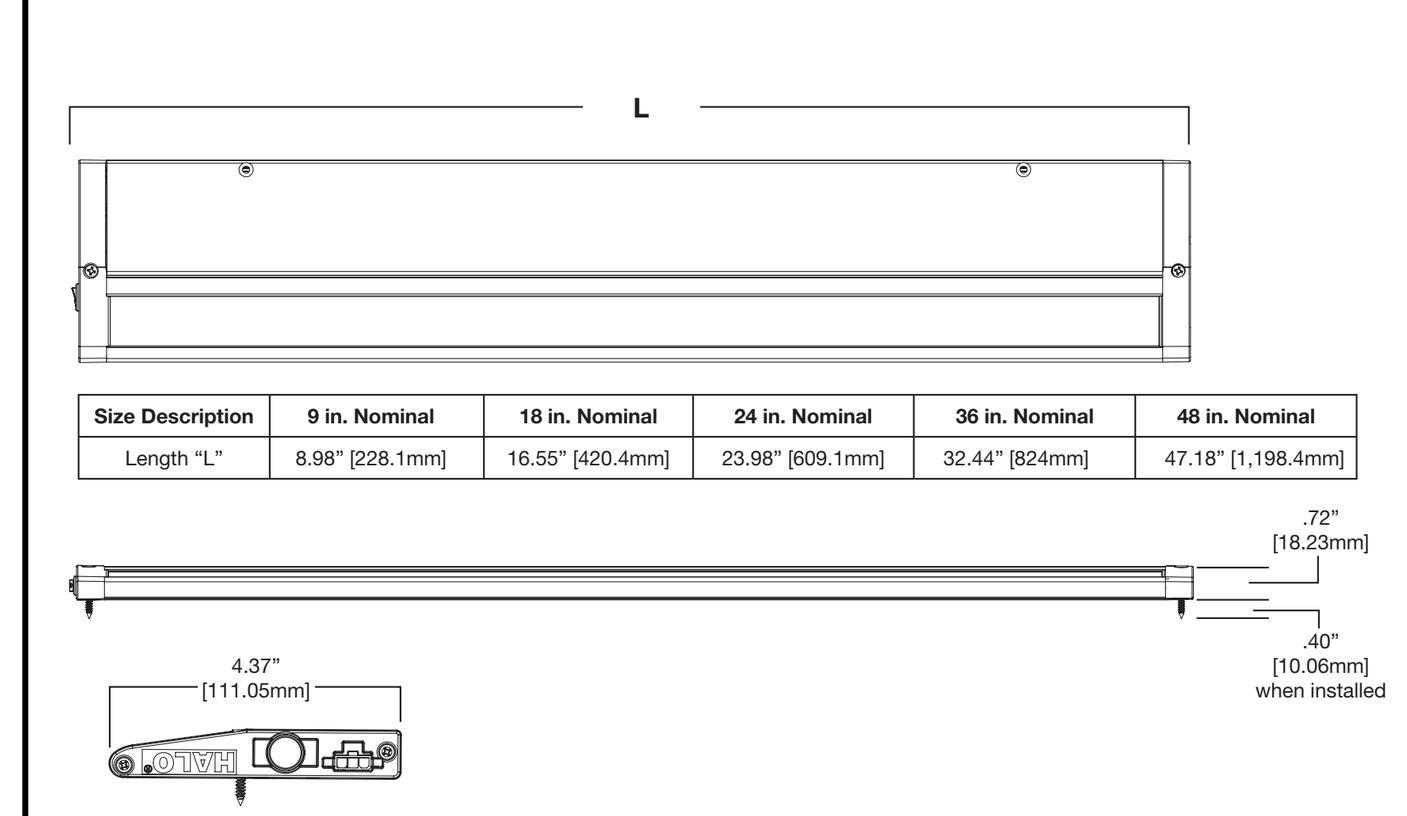

Size Description	9 in. Nominal	18 in. Nominal	24 in. Nominal	36 in. Nominal	48 in. Nominal
Length "L"	8.98" [228.1mm]	16.55" [420.4mm]	23.98" [609.1mm]	32.44" [824mm]	47.18" [1,198.4mm]

ENERGY DATA
Power Factor: >0.99
THD: <10%
Color Temperature: 2700K, 3000, 4000K
Color Rendering Index: 90
Nominal Lumens/Ft: 330

T24 Can be used to comply with California Title 24 High Efficacy requirements
T20 Certified to California Title 20 Appliance Database

Qualified and compliant. Refer to ENERGY STAR® Qualified Products List for listings. Can be used to comply with California Title 24 High Efficacy requirements. Certified to California Title 20 Appliance Efficiency Database.

EATON Powering Business Worldwide

TD518002EN
7/31/2015

Light Type F Manf. HALO

Fin. White

MT-4LD316 - 3 Lights
4" LED Precision Modules Energy Star®

WAC LIGHTING
Responsible Lighting®

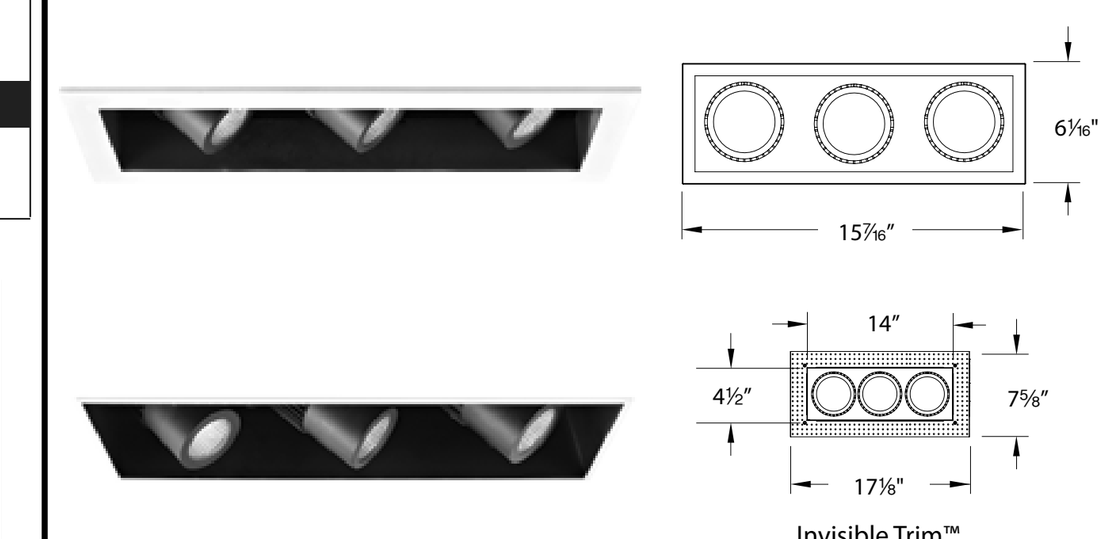

Fixture Type:
Catalog Number:
Project:
Location:

SPECIFICATIONS

Construction: Die-cast aluminum heat sink painted black. Trim, housing and junction box are 20 gauge steel. Frame and hanger bars are heavy gauge galvanized steel.

J-Box: Seven knockouts and four Romex® style wiring connectors provided for ease of installation. Rated for branch wiring.

Driver: Universal (120V - 277V)

Light Source: High output LED (included with housing)

Dimming: 0-10V dimmer. Dim from 100%-10%

Mounting: Supplied with hanger bars, adjustable from 15"-24½" to accommodate various joist construction and grid sizes. Hanger bars include a captive mounting "screw-nail" for ease of installation. Accommodates surface up to 1" thick. 14½" × 5⅛" cutout with trim, 14½" × 5⅛" cutout for Invisible Trim™. See instruction sheet for details on installation using spackle ring.

Finish: Abrasion resistant powder coat paint in Black (BK).

Standards: ETL & cETL listed.

PRODUCT DESCRIPTION

Retractable spot lights adjustable up to 90° from vertical

FEATURES

- Energy Star® rated
- Non-IC rated housings*
- Invisible Trim™ is designed to sit flush with the ceiling for a clean, architectural look
- Spot and Flood beam spreads
- 90° vertical adjustment and 350° horizontal rotation
- Accepts one replacement lens
- 50,000 hour rated life
- 5 year WAC Lighting product warranty

FIXTURE PERFORMANCE

Model #	Beam	Color Temp	Watts	Lumens	Efficacy	CRI
MT-4LD316N-S927	20°	2700K	48W	2208	46 Lm/W	90
MT-4LD316N-F927	40°			2172	45 Lm/W	
MT-4LD316N-S27	20°	2700K	48W	2760	58 Lm/W	85
MT-4LD316N-F27	40°			2715	57 Lm/W	
MT-4LD316N-S930	20°	3000K	48W	2304	48 Lm/W	90
MT-4LD316N-F930	40°			2256	47 Lm/W	
MT-4LD316N-S30	20°	3000K	48W	2880	60 Lm/W	85
MT-4LD316N-F30	40°			2820	59 Lm/W	
MT-4LD316N-S35	20°	3500K	48W	2925	61 Lm/W	85
MT-4LD316N-F35	40°			2880	60 Lm/W	
MT-4LD316N-S40	20°	4000K	48W	3300	69 Lm/W	85
MT-4LD316N-F40	40°			3240	68 Lm/W	

Lenses

		Color	
LENS-16	Colored Lens	AMB	Amber
		BLU	Blue
		GRN	Green
		RED	Red
		YEL	Yellow
LENS-16-UVF	UV Filter Lens		
LENS-16-FR	Frosted Lens		
LENS-16-SPR	Spread Lens		
LENS-16-BEL	Beam Elongating Lens		

HOUSING ORDER NUMBER

Model #	Beam	Color Temp	Rated	Finish
MT-4LD316N	S 20° F 40°	927 2700K (90 CRI) 27 2700K 930 3000K (90 CRI) 30 3000K 35 3500K 40 4000K	Non-IC	BK Black

MT-4LD316N – [ ] [ ] – BK

Example: MT-4LD316N-S27-BK

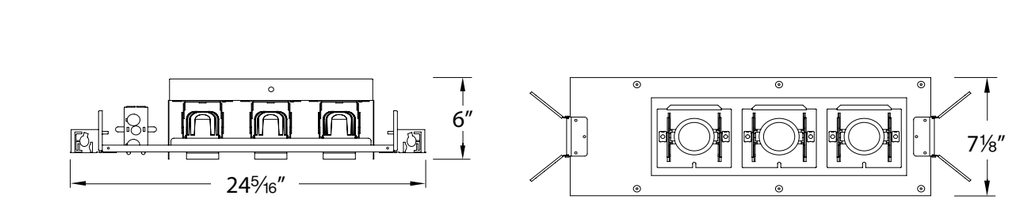

TRIM ORDER NUMBER

Trim	Invisible Trim™
MT-4LD316T-WT	MT-4LD316TL-WT

WAC Lighting
www.waclighting.com
Phone (800) 526.2588 • Fax (800) 526.2585

Headquarters/Eastern Distribution Center
44 Harbor Park Drive • Port Washington, NY 11050
Phone (516) 515.5000 • Fax (516) 515.5050

Western Distribution Center
1750 Archibald Avenue • Ontario, CA 91760
Phone (800) 526.2588 • Fax (800) 526.2585

Light Type D Manf. WAC Lighting

Finish: White Trim/White Interior

HALO

DESCRIPTION - H4 LED 2nd GENERATION ADJUSTABLE GIMBALS

Halo H4 LED Adjustable Gimbals, ELSG406 series, combine an adjustable gimbal trim and LED light engine for use with H457 series housings. The H4 LED adjustable gimbals feature 35° tilt and offer interchangeable optics with three beam distributions of 25°, 35°, and 50°. H4 LED 2nd Generation offers 90 CRI color rendering index and four color temperatures 2700K, 3000K, 3500K, 4000K. Three high-quality trim finishes of White, Satin Nickel, and Tuscan Bronze are available. Halo LED offers high quality, fit, finish, and performance in an energy-efficient, high-efficacy gimbal.

Catalog #		Type
Project		
Comments		Date
Prepared by		

SPECIFICATION FEATURES

MECHANICAL

Heat Sink

- Durable aluminum construction.
- Conducts heat away from the LED keeping the junction temperatures below specified maximums, even when installed in insulated ceiling housings.

Gimbal

- Precision designed fit and finish
- Die-cast aluminum with snap-in front loading ring allowing interchange of beam forming reflectors
- Gimbal front ring holds one lens media. Clear glass lens is included. Optional lens media such as L111 soft focus may be used in place of clear glass lens.
- 35° tilt adjustment with friction fit to heat sink.
- Smooth travel from nadir to 35°
- Works with the upper heat sink for thermal conduction away from the LED

MOUNTING

Friction Blades

- Precision formed steel spring blades provide retention of the light engines in the H4 LED series housings.
- Friction blade design allows the light engine to be installed in any position within the housing aperture (360 degrees).

ELECTRICAL

LED Connection

- LED connector is non-screw base offering easy installation with the H457 Series housings.
- LED connector is compliant with high-efficacy luminaire code requirements as a non-screw base socket.
- Separate grounding cable included on the module for attachment to the housing during installation.

Finish Options

WH = White
SN = Satin Nickel
TBZ = Tuscan Bronze

OPTICS

- Three beam distribution options with interchangeable round beam forming reflectors
- Gimbal is supplied with 25° reflector pre-installed
- Reflector options: 25°, 35°, 50° beam angle (TL412RK kit)
- Clear glass cover lens included with gimbal. One optional accessory lens may be used in place of clear lens.
- Reflector and lens are accessible behind the gimbal's snap-in front ring.

Optical Accessory Reflector Kit -- TL412RK

- Three reflector options
- 25° beam angle reflector (one is included with gimbal)
- 35° beam angle reflector
- 50° beam angle reflector

COLOR SPECIFICATION & QUALITY STANDARDS

- LED is a chip on board design consisting of a multiple LED package with proximity phosphor coating to create one virtual white light source for a productive "cone of light"
- Halo employs a tight chromaticity specification and LED color binning process to ensure LED color uniformity, sustainable Color Rendering Index (CRI) and Correlated Color Temperature (CCT) consistency over the useful life of the LED
- Halo H4 LED chromaticity specification is 3SDCM initial and 5SDCM at rated life, which exceeds ENERGY STAR® SSL color standards (as per ANSI 78.377-2008).
- Every Halo LED Module is quality tested and performance measured on the production line, and then serialized to register lumens, wattage, CRI and CCT.
- Halo LED serialized testing and measurement process further ensures color and lumen consistency to meet stringent Cooper Lighting specifications and exceed ENERGY STAR® SSL standards.
- Halo LED Modules and light engines include Color Rendering Index and Correlated Color Temperature in the model number. Example: ELSG406930WH

9 = >90 CRI; 30 = 3000K nominal CCT

QUALIFICATION

- Halo LED offers the choice of four correlated color temperatures: 2700K, 3000K, 3500K, 4000K
- 90 CRI
- ENERGY STAR® Qualified as used with designated LED trims*
- Can be used to meet State of California Title 24, Washington State Energy Code - WSEC, and International Energy Conservation Code – IECC, High Efficacy requirements when used with designated LED trims*
- LED emits no ultraviolet and minimal infrared wavelengths
- ROHS compliant
- Damp location listed with H457 LED housings
- Electrical/Energy Data refer to H457 LED housings (LED driver is fixed in housing)

Dimming

- The HALO H4 LED luminaires are dimmable. Refer to H457 housing specifications and consult dimmer manufacturers for compatibility and loading.

Warranty

Cooper Lighting provides a five year limited warranty on Halo LED Luminaires which includes the LED Recessed Housing, LED Light Engine, and LED trims. (Subject to all of the limitations set forth in Cooper Lighting Terms and Conditions of sale. Refer to www.cooperlighting.com.)

*Qualified and Compliant. Refer to ENERGY STAR® Qualified Products List and CEC (T24) Appliance Database for listings.

Cooper Lighting by EATON



H4 LED Square Gimbal 2nd Generation

3000K

ELSG406930WH
ELSG406930SN
ELSG406930TBZ

4-Inch LED Adjustable Square Gimbal Trim & Light Engine

FOR USE WITH H457 Series 4" LED Housings

High Efficacy LED

3000K nominal (2700K 3000K 3500K 4100K 5000K 6500K; 3045)

ELSG406930WH
ELSG406930SN
ELSG406930TBZ
4" Square Gimbal Light Engine - 3000K

Color Rendering Index (CRI, Ra): 90

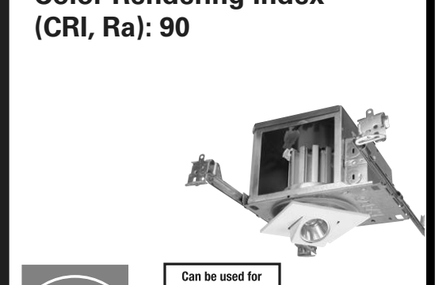

ADV131752
4/03/2014

Light Type B Manf. HALO

Revisions:

2 BUILDING COMMENTS 9/16/2020

LIGHTING SPECIFICATIONS (Interior)

SCALE : AS NOTED

DATE : 07.26.2018

SHEET : **A5.3**

Lighting Specifications Interior

THESE DRAWINGS ARE THE ORIGINAL UNPUBLISHED WORK OF THE ARCHITECT AND MAY NOT BE DUPLICATED OR USED WITHOUT THE WRITTEN PERMISSION OF THE ARCHITECT.
Curt Cline
© MODERN HOUSE

FILE PATH: /Users/modendesignco/Dropbox/000 ARCHICAD FILES/Pangan Arch/CAD/PANGEN_BUILDING_Comments2_10062020.pln • LAST SAVED BY: Modern House - Natsumi • PRINTED ON 4/27/21 @ 3:28 PM
PROJECT COMPANY • PANGAN RESIDENCE • *** PROJECT NUMBER *** • A5.4

Catskill Series™



The **Catskill Series™** utilizes the PAR20 halogen lamp. The entire fixture is manufactured from machined aluminum. There are eight luxurious polyester powder coat finishes from which to choose. The Catskill can be used as an uplight or downlight architectural wall bracket. With a projection of only 4", it meets the ADA requirements for wall bracket lighting.

Features

- Tamper proof design.
- ADA compliant.
- Completely sealed optical compartment.
- Clear, tempered glass lens, factory sealed.
- Machined aluminum construction with stainless steel hardware.
- Medium base lamp holder with 250° C, 18 ga., wire leads.
- c & us Listed with PAR20 lamps to 50 watts maximum.
- For use with 120V, no transformer required.

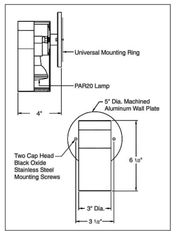

CATALOG NUMBER LOGIC

Example: CK - 49 - WHW - 9 - 11

Series

Lamp Type
0 - By others
47 - 50 PAR20/H/NSP(50W), 9° N. Spot
48 - 50 PAR20/H/SP(50W), 16° Spot
49 - 50 PAR20/H/FL(50W), 30° Flood

Finish

Powder Coat Color	Satin	Wrinkle
Bronze	BZP	BZW
Black	BLP	BLW
White(Gloss)	WHP	WHW
Aluminum	SAP	——
Verde	——	VER

Lens Type
9 - Clear (Standard)
10 - Spread
13 - Rectilinear

Shielding
11 - Honeycomb Baffle

Light Type cc Manf. BK Lighting
Name: Lite Star CK-49-SAP-9

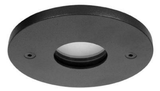

Versa Star™

Shown in Bronze Wrinkle Finish (BZW)

Versa Star™ Solid State (BKSSL®) Features Documentation Product Images Project Images Rep Tools For Use With

Manufactured within GreenSource Initiative™ guidelines.

Made from recycled materials.

Processed using renewable solar energy generated on-site at our Madera, CA facility.

Returnable at end of life to ensure cradle-to-cradle handling.

Cast aluminum rectangular backbox, 4-5/8" x 2-7/8" deep.

Front access allows for wire connection and inspection.

Five (5) 1/2" NPS tapped holes and four (4) plugs provided with backbox.

Backbox is suitable for concrete pour.

Faceplate fully machined from solid billet.

Furnished in copper-free aluminum (Type 6061-T6) or brass (Type 360) or stainless steel (Type 316).

Countersunk holes provide for flush hardware mounting (by others).

1/8" thick HT-805A silicone foam gasket with acrylic adhesive for water-tight seal.

Shock resistant, tempered, clear glass lens is factory adhered to fixture cap and provides hermetically sealed optical compartment.

Accommodates one (1) lens or louver media.

Specify soft focus (#12) or rectilinear (#13) lens.

Integrated solid-state system with 'e' technology is scalable for field upgrade.

Modular design with electrical quick disconnects permit field maintenance.

Exceeds ENERGY STAR® lumen maintenance requirements.

LM-80 certified.

Integral driver.

Minimum 50,000 hour rated life at 70% of initial lumens (L70).

LED Color – 2700K, 3000K or 4000K white light or amber. Amber equipped products comply with Sections 628-55.006(c) and 628-55.007(c) of the Florida Model Lighting Ordinance for Marine Turtle Protection.

Adjust-e-Lume™ (pat. pending) allows dynamic lumen response at the individual fixture. Indexed (100% to 25% nom.) lumen output. Maintains output at desired level or may be changed as conditions require.

Interchangeable OPTIKIT™ modules permit field changes to optical distribution. Color-coded for easy reference: Narrow Spot (NSP) = Red. Spot (SP) = Green. Medium Flood (MFL) = Yellow. Wide Flood = Blue.

Adjustable optical bracket provides up to 24° vertical aiming.

Lighting Facts listed.

For use with 12VAC BKSSL® remote transformer.

Teflon® coated wiring, 18AWG, 600V, 250° C rated and certified to UL 1659 standard.

Tamper-resistant, stainless steel hardware.

Exclusive StarGuard® corrosion protection.

Choose from Eight (8) standard and 20 premium Class 'A' TGIC Polyester Powder Coat finishes.

Five (5) Year limited warranty.

RoHS compliant.

c ETL us listed.

Made in USA.

Light Type aa Manf. B-K Lighting
Name: Versa Star
Fin. Brushed Aluminum

Light Type bb
See Architect

Lighting Specifications Exterior

THESE DRAWINGS ARE THE ORIGINAL UNPUBLISHED WORK OF THE ARCHITECT AND ARE NOT TO BE USED OR ISSUED FOR ANY PURPOSE WHATSOEVER WITHOUT THE WRITEN PERMISSION OF THE ARCHITECT.
©MODERN HOUSE

MODERN HOUSE
ARCHITECTURE & DESIGN
1265 Indiana Street
San Francisco Ca. 94107
P. 415.800.8520
C. 415.596.7281
modernhouse@mac.com
www.modernhousearchitects.com

LICENSED ARCHITECT CURTIS C. CLINE C26383 6.30.21 RENEWAL DATE STATE OF CALIFORNIA

Curt Cline Architect

BUILDING PERMIT REVIEW

029-35-005

PANGAN RESIDENCE

AUGUSTA CT
MILPITAS, CA

Revisions:

LIGHTING SPECIFICATIONS (Interior)

SCALE : AS NOTED

DATE : 07.26.2018

SHEET : **A5.4**

FILE PATH: /Users/modernhousearchitects/Dropbox/000 ARCHICAD FILES/Pangan Arch/CAD/PANGEN_BUILDING_Comments2_10062020.pln • LAST SAVED BY: Modern House - Natsumi • PRINTED ON 4/27/21 @ 3:28 PM
PROJECT COMPANY • PANGAN RESIDENCE • *** PROJECT NUMBER *** • A6.1

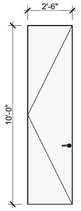

D-01

LOCATION: 102 COATS

MATERIAL/ FINISH: SOLID CORE/PAINT GRADE

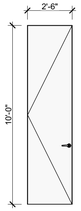

D-02

LOCATION: 103 PANTRY

MATERIAL/ FINISH: SOLID CORE/PAINT GRADE

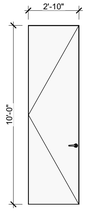

D-03

MATERIAL/ FINISH: SOLID CORE/PAINT GRADE

LOCATION: 003M STOR/ELV

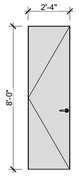

item as shown (D-05); item handed (D-06)

LOCATION: 108 PWDR 1

MATERIAL/ FINISH: SOLID CORE/PAINT GRADE

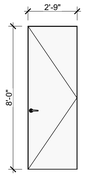

D-07

LOCATION: 109 BEDROOM 1

MATERIAL/ FINISH: SOLID CORE/PAINT GRADE

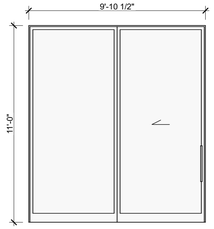

D-08

LOCATION: 109 BEDROOM 1

MATERIAL/ FINISH: SOLID CORE/PAINT GRADE

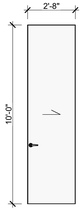

D-09

LOCATION: 109 BEDROOM 1

MATERIAL/ FINISH: SOLID CORE/PAINT GRADE

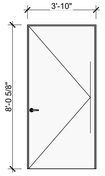

D-10

LOCATION: 114 MST. BED

MATERIAL/ FINISH: SOLID CORE/PAINT GRADE

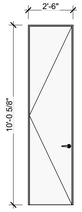

D-11

LOCATION: 110 MST. W.C.

MATERIAL/ FINISH: SOLID CORE/PAINT GRADE

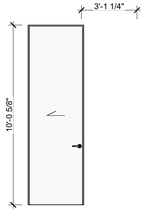

D-12

LOCATION: 111 MST. CLOSET

MATERIAL/ FINISH: SOLID CORE/PAINT GRADE

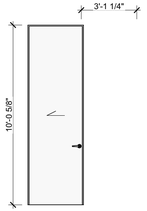

D-13

LOCATION: 111 MST. CLOSET

MATERIAL/ FINISH: SOLID CORE/PAINT GRADE

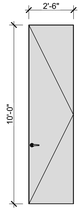

D-14

LOCATION: 114 MST. BED

MATERIAL/ FINISH: SOLID CORE/PAINT GRADE

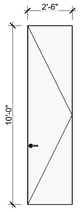

D-15

LOCATION: 114 MST. BED

MATERIAL/ FINISH: SOLID CORE/PAINT GRADE

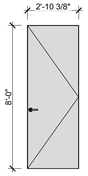

D-16

LOCATION: 009 GUEST/EXERCISE

MATERIAL/ FINISH: SOLID CORE/PAINT GRADE

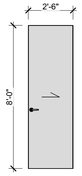

D-17

LOCATION: 008 L. BATH 3

MATERIAL/ FINISH: SOLID CORE/PAINT GRADE

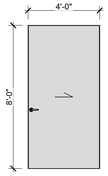

D-18

LOCATION: 005 UTILITY

MATERIAL/ FINISH: SOLID CORE/PAINT GRADE

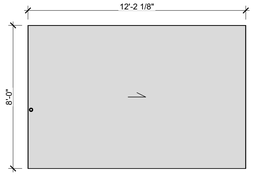

D-19

LOCATION: 004 MEDIA ROOM/STUDY

MATERIAL/ FINISH: SOLID CORE/PAINT GRADE

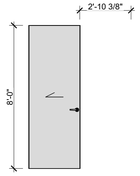

D-20

LOCATION: 006 L. BATH 2

MATERIAL/ FINISH: SOLID CORE/PAINT GRADE

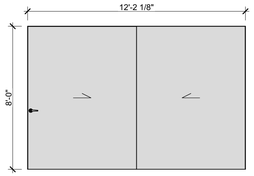

D-21

LOCATION: 004 MEDIA ROOM/STUDY

MATERIAL/ FINISH: SOLID CORE/PAINT GRADE

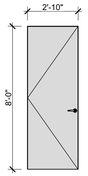

D-22

LOCATION: 003L STOR/ELV

MATERIAL/ FINISH: SOLID CORE/PAINT GRADE

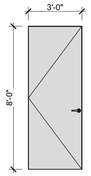

D-23

LOCATION: 001 GARAGE

MATERIAL/ FINISH: SOLID CORE/PAINT GRADE

NOTES: SELF-CLOSING, SELF-LATCHING DOOR, EITHER 1-3/8" SOLID CORE OR A LISTED 20 MIN. ASSEMBLY, FOR OPENINGS BETWEEN GARAGE AND DWELLING. SECTION R302.5.1.

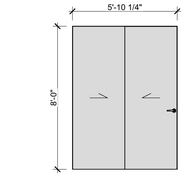

D-24

LOCATION: 001 GARAGE

MATERIAL/ FINISH: SOLID CORE/PAINT GRADE

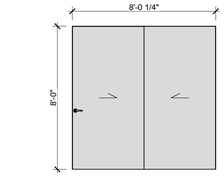

D-25

LOCATION: 001 GARAGE

MATERIAL/ FINISH: SOLID CORE/PAINT GRADE

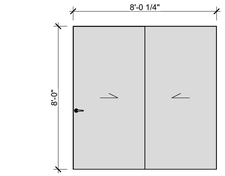

D-26

LOCATION: 001 GARAGE

MATERIAL/ FINISH: SOLID CORE/PAINT GRADE

THESE DRAWINGS ARE THE ORIGINAL UNPUBLISHED WORK OF THE ARCHITECT CURTIS C. CLINE AND MAY NOT BE DUPLICATED, USED WITHOUT THE WRITTEN PERMISSION OF THE ARCHITECT.
© MODERN HOUSE

MODERN HOUSE
ARCHITECTURE & DESIGN
1265 Indiana Street
San Francisco Ca. 94107
P. 415.800.8520
C. 415.596.7281
modernhouse@mac.com
www.modernhousearchitects.com

LICENSED ARCHITECT CURTIS C. CLINE C26383 6.30.21 RENEWAL DATE STATE OF CALIFORNIA

Curt Cline Architect

BUILDING PERMIT REVIEW

029-35-005

PANGAN RESIDENCE

AUGUSTA CT
MILPITAS, CA

Revisions:

DOOR SCHEDULE

SCALE : AS NOTED

DATE : 07.26.2018

SHEET : **A6.1**

FILE PATH: /Users/moderndesignco/Dropbox/000 ARCHICAD FILES/Pangan ArchiCAD/PANGEN_BUILDING_Comments2_10062020.pln • LAST SAVED BY: Modern House - Natsumi • PRINTED ON 4/27/21 @ 3:28 PM
PROJECT COMPANY • PANGAN RESIDENCE • *** PROJECT NUMBER *** • A6.2

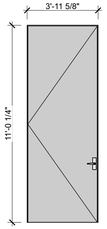

EXT D-01

FRAME: ALUMINUM BY BLOMBERG

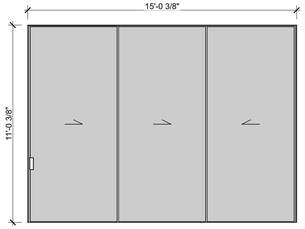

EXT D-02

FRAME: ALUMINUM BY BLOMBERG

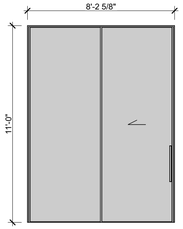

EXT D-03, EXT D-05

FRAME: ALUMINUM BY BLOMBERG

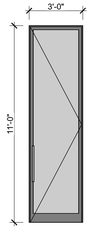

EXT D-05

FRAME: ALUMINUM BY BLOMBERG

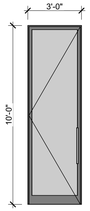

EXT D-06

LOCATION: 104 KITCHEN

FRAME: ALUMINUM BY BLOMBERG

HARDWARE GROUP: AS PER MANF.

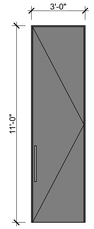

EXT D-07

FRAME: ALUMINUM BY BLOMBERG

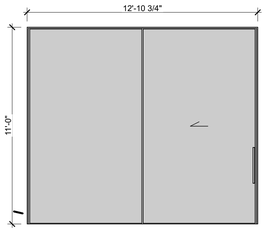

EXT D-08

LOCATION: 107 GALLERY

GLAZING: TEMP E.

FRAME: ALUMINUM BY BLOMBERG

SCREEN: NA

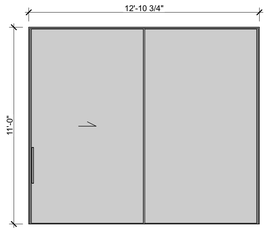

EXT D-09

LOCATION: 109 BEDROOM 1

FRAME: ALUMINUM BY BLOMBERG

GLAZING: TEMP E./SOLAR BAN 70

HARDWARE GROUP: AS PER MANF.

SCREEN: PHANTOM SCREEN

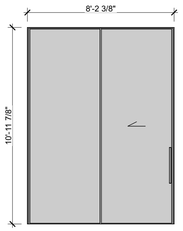

item as shown (EXT D-11); item handed (EXT D-10)

LOCATION: 114 MST. BED

GLAZING: TEMP E.

FRAME: ALUMINUM BY BLOMBERG

SCREEN: PHANTOM SCREEN

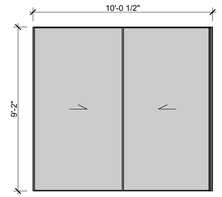

EXT D-12A

LOCATION: 009 GUEST/EXERCISE

FRAME: ALUMINUM BY BLOMBERG

GLAZING: TEMP E.

HARDWARE GROUP: AS PER MANF.

SCREEN: PHANTOM SCREEN

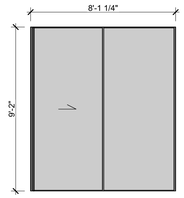

EXT D-12B

LOCATION: 009 GUEST/EXERCISE

FRAME: ALUMINUM BY BLOMBERG

GLAZING: TEMP E.

HARDWARE GROUP: AS PER MANF.

SCREEN: PHANTOM SCREEN

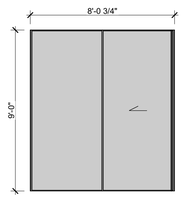

EXT D-12C

LOCATION: 009 GUEST/EXERCISE

FRAME: ALUMINUM BY BLOMBERG

GLAZING: TEMP E.

HARDWARE GROUP: AS PER MANF.

SCREEN: PHANTOM SCREEN

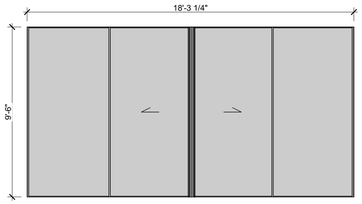

EXT D-13

LOCATION: 004 MEDIA ROOM/STUDY

FRAME: ALUMINUM BY BLOMBERG

GLAZING: TEMP E.

HARDWARE GROUP: AS PER MANF.

SCREEN: NA

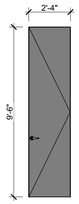

EXT D-14

FRAME: ALUMINUM BY BLOMBERG

LOCATION: 004 MEDIA ROOM/STUDY

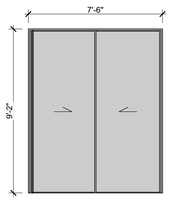

EXT D-15

LOCATION: 002 LOWER FOYER

FRAME: ALUMINUM BY BLOMBERG

GLAZING: TEMP E.

SCREEN: NA

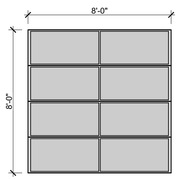

EXT GD-01, EXT GD-02, EXT GD-03

LOCATION: 001 GARAGE

1

NOTES: EXTERIOR DOORS & WINDOWS

EXTERIOR WINDOWS (GLAZING) AND GLAZING IN DOORS: SHALL BE MULTI-PANE GLAZING WITH A MINIMUM OF ONE TEMPERED PANE (CBC 2406-SAFETY GLAZING), GLASS BLOCK, A 20-MINUTE RATED FIRE ASSEMBLY (NFPA 275), OR A TESTED MATERIAL OR ASSEMBLY THAT MEETS THE SFM STANDARD 12-7A-2.(CRC 337.8.2.1)

EXTERIOR DOORS: WINDOWS AND DOORS ARE SOLID ALUMINUM EXTRUSIONS (NOT CLAD) WHICH SHOULD BE CONSIDERED NON-COMBUSTIBLE AND IGNITION-RESISTANT SATISFYING CRC 337.8.3.A.

2

THESE DRAWINGS ARE THE ORIGINAL UNPUBLISHED WORK OF THE ARCHITECT CURTIS C. CLINE AND MAY NOT BE DUPLICATED, USED OR DISCLOSED WITHOUT THE WRITTEN PERMISSION OF THE ARCHITECT.
COPYRIGHT
MODERN HOUSE

MODERN HOUSE
ARCHITECTURE & DESIGN
1265 Indiana Street
San Francisco Ca. 94107
P. 415.800.8520
C. 415.596.7281
modernhouse@mac.com
www.modernhousearchitects.com

LICENSED ARCHITECT CURTIS C. CLINE C26383 6.30.21 RENEWAL DATE STATE OF CALIFORNIA

Curt Cline Architect

BUILDING PERMIT REVIEW

029-35-005

PANGAN RESIDENCE

AUGUSTA CT
MILPITAS, CA

Revisions:

1 BUILDING COMMENTS 11/29/2018

2 BUILDING COMMENTS 9/16/2020

DOOR SCHEDULE (CONT'D)

SCALE : AS NOTED

DATE : 07.26.2018

SHEET : **A6.2**

FILE PATH: //Users/moderndesignco/Dropbox/000 ARCHICAD FILES/Pangan ArchiCAD/PANGEN_BUILDING_Comments2_10062020.pln • LAST SAVED BY: Modern House - Natsumi • PRINTED ON 4/27/21 @ 3:28 PM
PROJECT COMPANY • PANGAN RESIDENCE • *** PROJECT NUMBER *** • A6.3

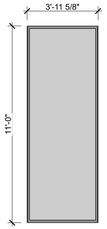

W-01, W-02, W-03

LOCATION: 101 FOYER
GLAZING: TEMP E.
FRAME: ALUMINUM BY BLOMBERG
SCREEN: NA

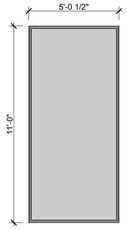

W-04, W-05, W-06, W-07

LOCATION: 101 FOYER
GLAZING: TEMP E./SOLAR BAN 70
FRAME: ALUMINUM BY BLOMBERG
SCREEN: PHANTOM SCREEN

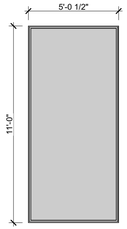

W-08, W-09, W-10, W-11

LOCATION: 106 GREATROOM
GLAZING: TEMP E./SOLAR BAN 70
FRAME: ALUMINUM BY BLOMBERG
SCREEN: PHANTOM SCREEN

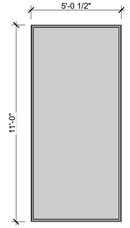

W-12, W-13, W-14, W-15

LOCATION: 106 GREATROOM
GLAZING: TEMP E.
FRAME: ALUMINUM BY BLOMBERG
SCREEN: NA

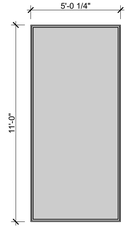

W-16, W-17, W-18

LOCATION: 105 DINING
GLAZING: TEMP E.
FRAME: ALUMINUM BY BLOMBERG
SCREEN: NA

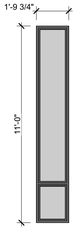

W-19

LOCATION: 112 BATH 1
GLAZING: TEMP E.
FRAME: ALUMINUM BY BLOMBERG
SCREEN: NA

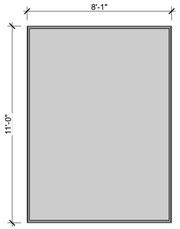

W-20

LOCATION: 113 MST. BATH
GLAZING: TEMP E./SOLAR BAN 70
FRAME: ALUMINUM BY BLOMBERG
SCREEN: PHANTOM SCREEN

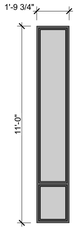

W-21

LOCATION: 113 MST. BATH
GLAZING: TEMP E.
FRAME: ALUMINUM BY BLOMBERG
SCREEN: NA

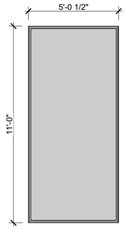

W-22, W-23, W-24

LOCATION: 114 MST. BED
GLAZING: TEMP E./SOLAR BAN 70
FRAME: ALUMINUM BY BLOMBERG
SCREEN: PHANTOM SCREEN

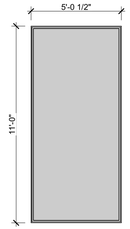

W-26, W-27

LOCATION: 114 MST. BED
GLAZING: TEMP E.
FRAME: ALUMINUM BY BLOMBERG
SCREEN: PHANTOM SCREEN

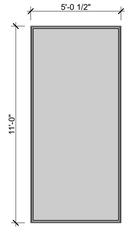

W-28

LOCATION: 114 MST. BED
GLAZING: TEMP E.
FRAME: ALUMINUM BY BLOMBERG
SCREEN: PHANTOM SCREEN

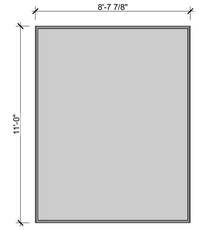

W-28

LOCATION: 110 MST. W.C.
GLAZING: TEMP E.
FRAME: ALUMINUM BY BLOMBERG
SCREEN: NA

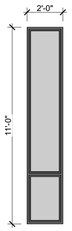

W-29

LOCATION: 110 MST. W.C.
GLAZING: TEMP E.
FRAME: ALUMINUM BY BLOMBERG
SCREEN: NA

Royalite
SKYLIGHT & LADDER MANUFACTURING, INC.

Code Compliance Evaluation
Royalite Residential Series Acrylic Dome
and
Single-lite Glass Skylights

The Royalite Residential Series Acrylic Dome and Single-lite Glass Skylights meet the Structural loading requirements of the 2016 California Building Code (CBC) and the 2015 International Building Code.

I have investigated the status of the Royalite Residential Series Skylights as compared with the requirements of the American Architectural Manufacturer's Association specification (AAMA/WDMA/CSA 101/I.S.2/A440-08) which is cited in the 2016 CBC.

The specific requirements for the materials, installation and allowable loads called for are acceptable under the current codes. Royalite products meet or exceed the AAMA/WDMA/CSA 101/I.S.2/A440 design requirements for the positive and negative design loads. The fixed units exceed the loading requirements of the Performance Class CW (40psf) and the operable units exceed the requirements of the Performance Class R (25psf).

Michael "Tony" Regan
Structural Engineer
10580 N. McCarran Blvd. #115-181
Reno, NV. 89503
(775) 741-2568
tgregan@aol.com

REGISTERED PROFESSIONAL ENGINEER MICHAEL ANTON REGAN No. S4196 Exp. 9/30/18 STRUCTURAL STATE OF CALIFORNIA
7/26/18

1055 Terminal Way,
San Carlos, CA 94070
www.royalite-mfg.com

1

NOTES: EXTERIOR DOORS & WINDOWS

EXTERIOR WINDOWS (GLAZING) AND GLAZING IN DOORS: SHALL BE MULTI-PANE GLAZING WITH A MINIMUM OF ONE TEMPERED PANE (CBC 2406-SAFETY GLAZING), GLASS BLOCK, A 20-MINUTE RATED FIRE ASSEMBLY (NFPA 275), OR A TESTED MATERIAL OR ASSEMBLY THAT MEETS THE SFM STANDARD 12-7A-2.(CRC 337.8.2.1)

EXTERIOR DOORS: EXTERIOR SURFACE SHALL BE NONCOMBUSTIBLE, IGNITION-RESISTANT, OR THE DOOR MAY BE MINIMUM 1 3/8-INCH THICK SOLID WOOD. RAISED PANELS SHALL NOT BE LESS THAN 1 1/4-INCH THICK AND MAY BE TAPERED TO 3/8-INCH THICK AT EDGES. (CRC 337.8.3) SHALL HAVE A FIRE-RESISTANCE RATING OF NOT LESS THAN 20 MINUTES WHEN TESTED ACCORDING TO NFPA 252. SHALL BE TESTED TO MEET THE PERFORMANCE REQUIREMENTS OF SFM STANDARD 12-8A-1

THESE DRAWINGS ARE THE ORIGINAL UNPUBLISHED WORK OF THE ARCHITECT AND MAY NOT BE USED OR REPRODUCED WITHOUT THE WRITTEN PERMISSION OF THE ARCHITECT.
©MODERN HOUSE

MODERN HOUSE
ARCHITECTURE & DESIGN
1265 Indiana Street
San Francisco Ca. 94107
P. 415.800.8520
C. 415.596.7281
modernhouse@mac.com
www.modernhousearchitects.com

LICENSED ARCHITECT CURTIS C. CLINE C26383 6.30.21 RENEWAL DATE STATE OF CALIFORNIA

Curt Cline Architect

BUILDING PERMIT REVIEW

029-35-005

PANGAN RESIDENCE

AUGUSTA CT
MILPITAS, CA

Revisions:

1 BUILDING COMMENTS 11/29/2018

WINDOW SCHEDULE

SCALE : AS NOTED

DATE : 07.26.2018

SHEET : **A6.3**

FILE PATH: I:\Users\modernhouse\Dropbox\000 ARCHICAD FILES\Pangan Arch\CAD\PANGEN_BUILDING_Comments2_10062020.pln • LAST SAVED BY: Modern House - Natsumi • PRINTED ON 4/27/21 @ 3:28 PM
PROJECT COMPANY • PANGAN RESIDENCE • *** PROJECT NUMBER *** • A7.1

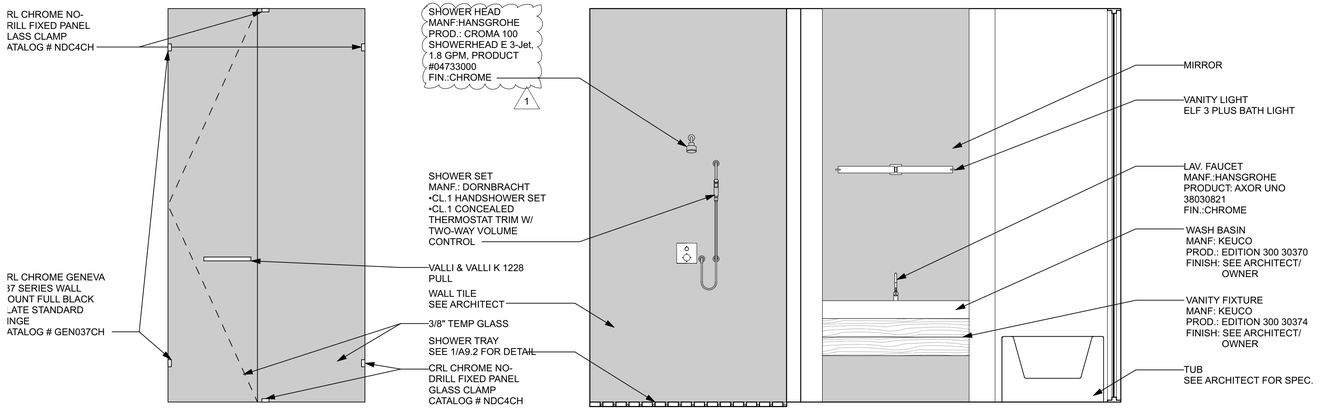

1A A7.1 MASTER BATH SHOWER - 113

SCALE: 1/2" = 1'-0"

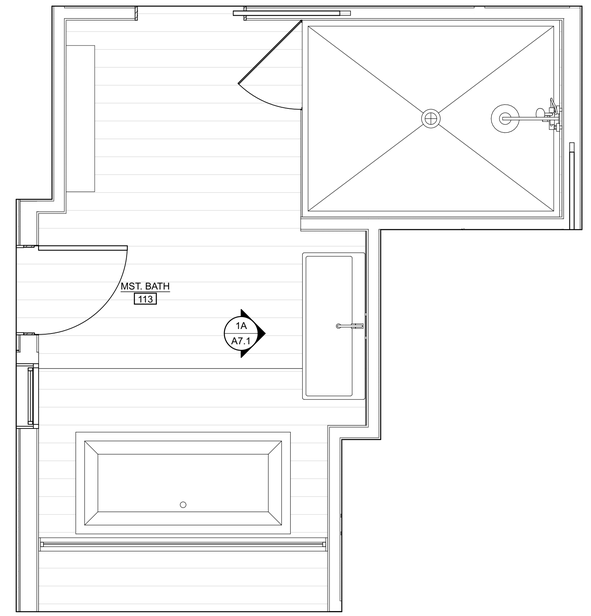

1 A7.1 PLAN AT MASTER BATH - 113

SCALE: 1/2" = 1'-0"

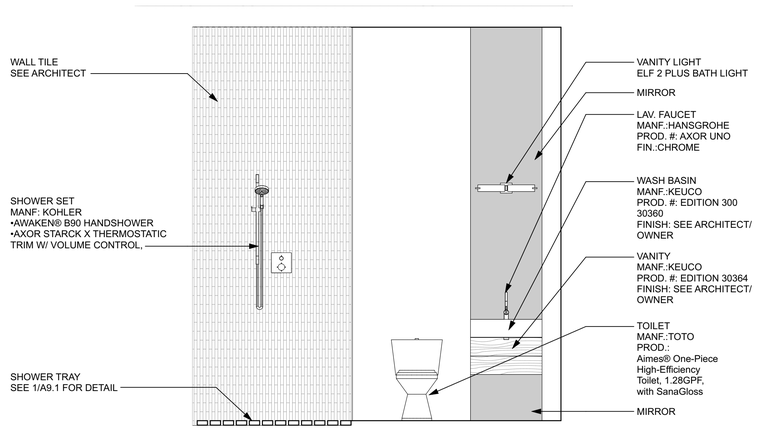

2B A7.1 BATH 1 VANITY - 112

SCALE: 1/2" = 1'-0"

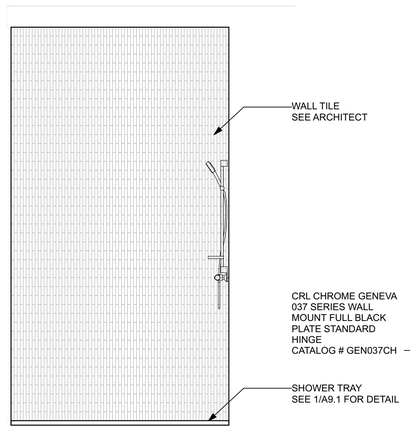

2A A7.1 BATH 1 SHOWER - 112

SCALE: 1/2" = 1'-0"

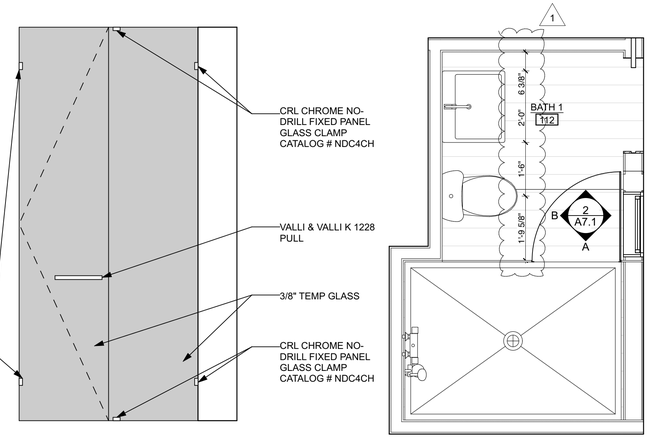

2 A7.1 BATH 1 - 112

SCALE: 1/2" = 1'-0"

THESE DRAWINGS ARE THE ORIGINAL UNPUBLISHED WORK OF THE ARCHITECT AND MAY NOT BE USED OR DISCLOSED WITHOUT THE WRITTEN PERMISSION OF THE ARCHITECT.
©MODERN HOUSE

MODERN HOUSE
ARCHITECTURE
& DESIGN
1265 Indiana Street
San Francisco Ca. 94107
P. 415.800.8520
C. 415.596.7281
modernhouse@mac.com
www.modernhousearchitects.com

LICENSED ARCHITECT
CURTIS C. CLINE
C26383
6.30.21
RENEWAL DATE
STATE OF CALIFORNIA

Curt Cline Architect

BUILDING PERMIT REVIEW

029-35-005

PANGAN RESIDENCE

AUGUSTA CT
MILPITAS, CA

Revisions:

1 BUILDING COMMENTS 11/29/2018

INTERIOR ELEVATIONS

SCALE : AS NOTED

DATE : 07.26.2018

SHEET : **A7.1**

FILE PATH: /Users/moderndesignco/Dropbox/000 ARCHICAD FILES/Pangan Arch/CAD/PANGEN_BUILDING_Comments2_10062020.pln • LAST SAVED BY: Modern House - Natsumi • PRINTED ON 4/27/21 @ 3:28 PM
PROJECT COMPANY • PANGAN RESIDENCE • *** PROJECT NUMBER *** • A7.2

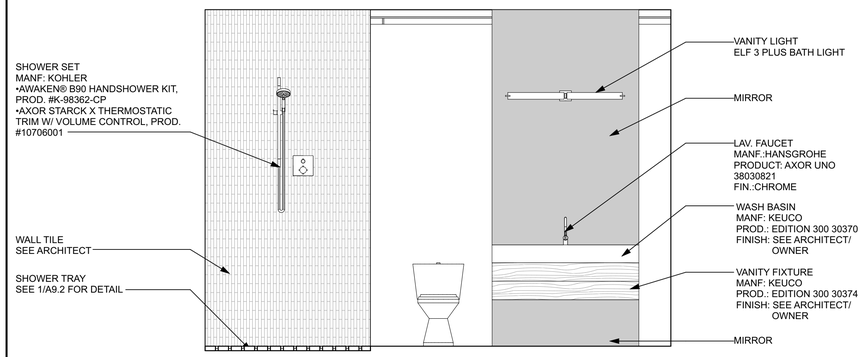

1C A7.2 **BATH 3 VANITY**
SCALE: 1/2" = 1'-0"

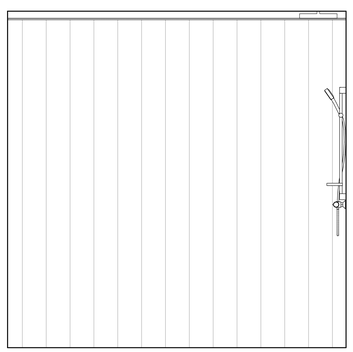

1B A7.2 **BATH 3 - 008**
SCALE: 1/2" = 1'-0"

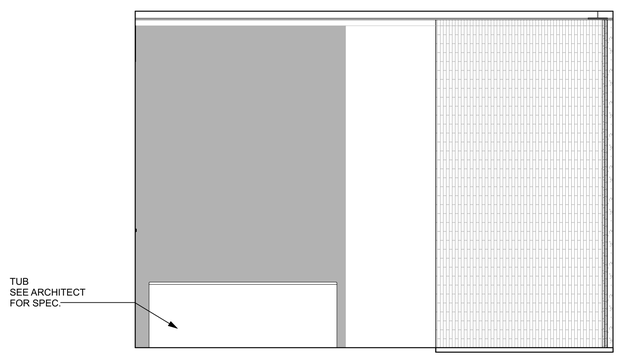

1A A7.2 **BATH 3 - 008**
SCALE: 1/2" = 1'-0"

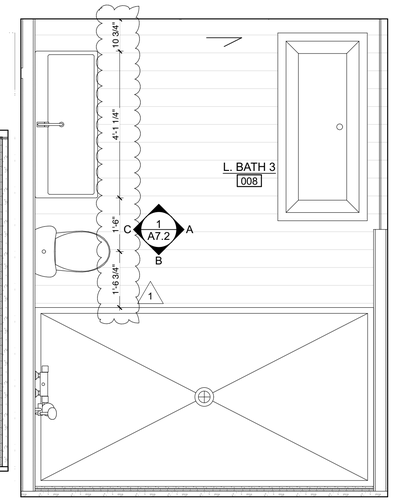

1 A7.2 **PLAN AT BATH 3 - 008**
SCALE: 1/2" = 1'-0"

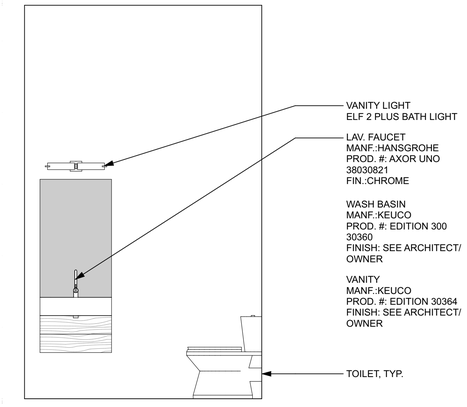

3A A7.2 **POWDER - 108**
SCALE: 1/2" = 1'-0"

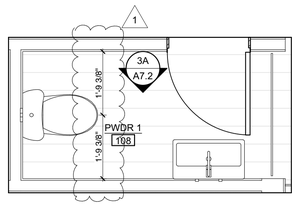

3 A7.2 **PLAN AT PWDR 1 - 108**
SCALE: 1/2" = 1'-0"

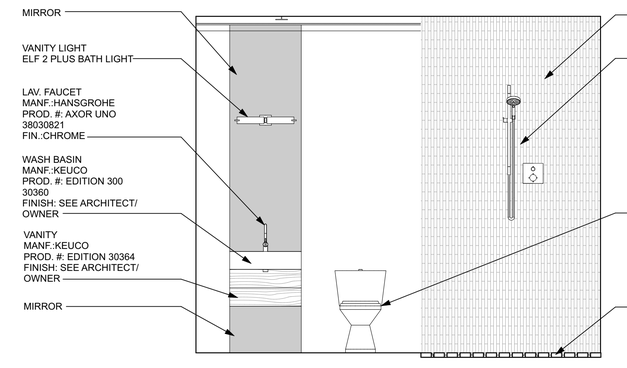

2A A7.2 **BATH 1 - 006**
SCALE: 1/2" = 1'-0"

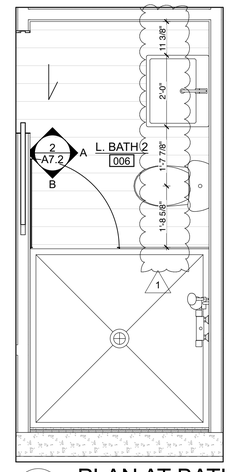

2 A7.2 **PLAN AT BATH 3 - 006**
SCALE: 1/2" = 1'-0"

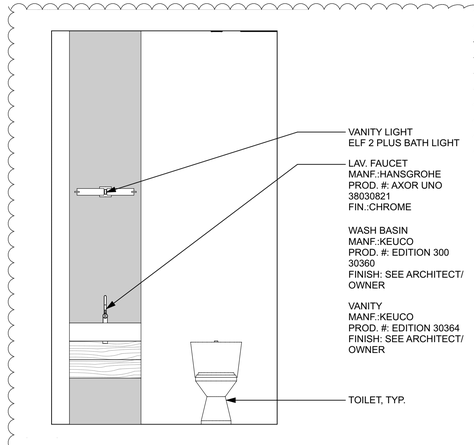

5A A7.2 **W.C. 110**
SCALE: 1/2" = 1'-0"

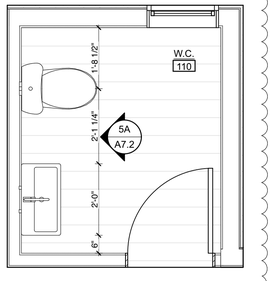

5 A7.2 **PLAN AT W.C. 110**
SCALE: 1/2" = 1'-0"

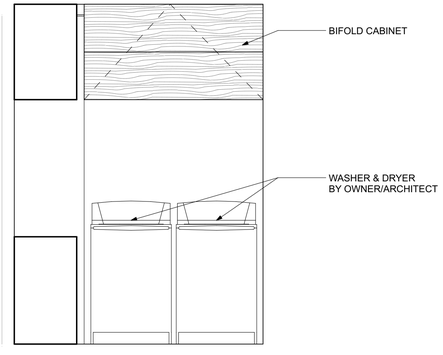

4B A7.2 **UTILITY - 005**
SCALE: 1/2" = 1'-0"

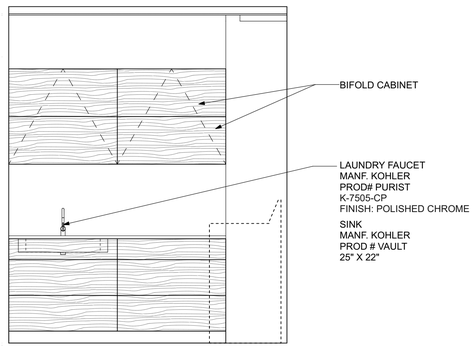

4A A7.2 **UTILITY - 005**
SCALE: 1/2" = 1'-0"

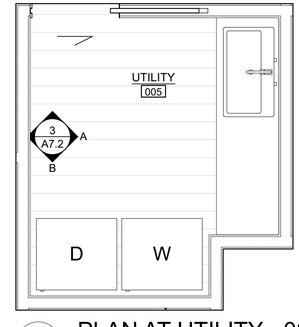

4 A7.2 **PLAN AT UTILITY - 005**
SCALE: 1/2" = 1'-0"

THESE DRAWINGS ARE THE ORIGINAL UNPUBLISHED WORK OF MODERN HOUSE AND MAY NOT BE USED OR REPRODUCED WITHOUT THE WRITTEN PERMISSION OF THE ARCHITECT.
© MODERN HOUSE

MODERN HOUSE
ARCHITECTURE & DESIGN
1265 Indiana Street
San Francisco Ca. 94107
P. 415.800.8520
C. 415.596.7281
modernhouse@mac.com
www.modernhousearchitects.com

LICENSED ARCHITECT CURTIS C. CLINE C26383 6.30.21 RENEWAL DATE STATE OF CALIFORNIA

Curt Cline Architect

BUILDING PERMIT REVIEW

029-35-005
PANGAN RESIDENCE
AUGUSTA CT
MILPITAS, CA

Revisions:
1 BUILDING COMMENTS 11/29/2018

INTERIOR ELEVATIONS

SCALE : AS NOTED
DATE : 07.26.2018
SHEET : **A7.2**

FILE PATH: /Users/moderndesignco/Dropbox/000 ARCHICAD FILES/Pangan ArchiCAD/PANGEN_BUILDING_Comments2_10062020.pln • LAST SAVED BY: Modern House - Natsumi • PRINTED ON 4/27/21 @ 3:28 PM
PROJECT COMPANY • PANGAN RESIDENCE • *** PROJECT NUMBER *** • A7.3

CRL Chrome New York Glass-to-Glass Top Mount Shower Door Pivot Hinge



The **CRL New York Series Shower Door Pivot Hinge** features precision machined 300 Series stainless steel components. The New York Series pivot hinges offer even more possibilities for unique designs and applications. They can be used with our frameless header systems to create shower enclosures that are not attached to the ceiling. This series hinge uses non-mouse ear design for added adjustment. It has precision wound stainless steel return springs and is self closing from 25 degrees to self centering 0 degree return. (5 degree positive closure and 45 degree configurations available) Matched finish stainless steel Allen style clamp screws with an Allen wrench is included. Wall mount hinges include matched finish stainless steel mounting screws. Conservatively rated at 50 pounds per hinge.

Catalog Number:	**3803112**
Also Available in These Catalogs:	SM26 Somaca General Catalog, PAGE 0358
Color:	Chrome
Maximum Door Weight:	Capacities Door Width
2 Hinges 120 lbs:	32 in (812.8 mm)
Ship Via:	Can Ship UPS
Shipping Weight:	2 lb (907g)
Minimum Order:	1 Each

Additional Product Information:
Using two hinges with 3/8 to 1/2 inch glass (10 to 12 millimeters) the hinge will hold up to 120 pounds (54 kilograms) with a maximum width of 32 inches (813 millimeters).

CRL Chrome No-Drill Fixed Panel Glass Clamp



- Made of Solid Brass
- No Glass Fabrication Required
- Includes Clear Gaskets and Mounting Screws
- No-Drill Fixed Panel Clamps Allow Securing of Fixed Panels of Glass, But Only Under Certain Circumstances
- For 3/8" or 5/16" (10 or 8 mm) Glass

Made of solid brass, and available in numerous stock finishes, these **CRL No-Drill Fixed Panel Clamps** provide an alternative to Clamps requiring drilled holes or notches in the glass. Two nylon tipped set screws are tightened to secure the glass. Mounting screws are also provided for the wall/ceiling/floor. Silicone must also be used for reinforcement along all glass edges where Clamps are used.

SPECIFICATIONS:
Material: Solid Brass
Glass Thickness Range: NDC4: 5/16" to 3/8" (8 to 10 mm); NDC6: 1/4" (6 mm)
No Glass Fabrication Required
Includes: Mounting Screw and Clear Gaskets

Catalog Number:	**NDC4CH**
Also Available in These Catalogs:	CRL53R Glass & Glazing Catalog, PAGE 278G SD12 Frameless Shower Door 2012, PAGE 5892
Color:	Chrome
Size:	2-3/8" (60 mm) Wide x 1-1/8" (28 mm) High
Ship Via:	Can Ship UPS
Minimum Order:	1 Each

CRL Chrome Geneva 037 Series Wall Mount Full Back Plate Standard Hinge



- Self-Centering with Reversible 5 Degree Pivot Pin
- Available in Several Beautiful Finishes
- Three Year Warranty
- Wall Mount Full Back Plate Standard Model(Factory Set for Standard Closing Position)

The **CRL Geneva Series** of professional Hinges is able to accommodate 5/16" (8 mm) to 1/2" (12 mm) glass. A variety of six styles gives design flexibility, including three different Wall Mount and three different Glass-to-Glass types. Geneva Hinges are self-centering and contain a Reversible 5° Pivot Pin. In addition, Custom Pivot Pins are available to accommodate "off-angle" installations. Made of solid brass with all moving parts (pins and springs) in stainless steel.

Catalog Number:	**GEN037CH**
Also Available in These Catalogs:	CRL23 Shower Door and Mirror Hardware Catalog, PAGE 3131 SD12 Frameless Shower Door 2012, PAGE 5814
Color:	Chrome
Ship Via:	Can Ship UPS
Shipping Weight:	2 lb (907g)
Minimum Order:	1 Each

TOTO®

MS626214CEF(G)

Aimes® One-Piece High-Efficiency Toilet, 1.28GPF



FEATURES

- Tornado Flush™ flushing system, low consumption (1.28GPF/4.8LPF)
- CeFiONtect™ ceramic glaze - prevents debris and mold from sticking to ceramic surfaces, leading to fewer chemicals and less water in cleaning
- Universal Height
- Elongated front bowl with SoftClose® seat (SS214)
- 12" Unifit rough-in (included)
- Chrome plated, brushed nickel or polished nickel trip lever

MODELS

- MS626214CEFG
  With CeFiONtect ceramic glaze, SS214 SoftClose seat included
- MS626214CEF
  Less CeFiONtect, SS214 SoftClose seat included
- TSU03W.10R - 10" Unifit rough-in (sold separately)
- TSU03W.14R - 14" Unifit rough-in (sold separately)

COLORS/FINISHES

- Standard
  #01 Cotton
  #03 Bone
  #11 Colonial White
  #12 Sedona Beige
  #51 Ebony (not available in CeFiONtect)

  #CP Chrome plated trip lever
  #BN Brushed nickel trip lever
  #PN Polished nickel trip lever

PRODUCT SPECIFICATION

The one-piece high-efficiency Tornado Flush system toilet shall be 1.28GPF/4.8LPF. Toilet shall be 12" Unifit rough-in, 10" and 14" Unifit rough-in are optional. Toilet shall have optional CeFiONtect ceramic glaze and be at Universal Height. Toilet shall have elongated front bowl with SoftClose seat and Chrome, Brushed Nickel or Polished Nickel trip lever. Toilet shall be TOTO Model MS626214CEF_____.

SPECIFICATIONS

Water Use	1.28 GPF/4.8LPF
Flush System	Tornado Flush®
Min. Water Pressure	8 psi (flowing)
Water Surface	7-3/4" x 9-3/8"
Trap Diameter	2-1/8"
Rough-in	12" std, 10" & 14" optional
Trap Seal	2-1/8"
Warranty	One Year Limited Warranty
Material	Vitreous china
Shipping Weight	119 lbs.
Shipping Dimensions	32"L x 20"W x 17-3/4" H¹ x 28-3/4" H²

CeFiONtect

Tornado Flush

CODES/STANDARDS

- Meets or exceeds ASME A112.19.2/CSA B45.1
- Certifications: IAPMO(cUPC), EPA Watersense, State of Massachusetts, City of Los Angeles, and others
- Code compliance: UPC, IPC, NSPC, NPC Canada, and others
- Legislative Compliance: California AB715, California Green Building Code, City of Los Angeles Water Efficiency Ordinance
- ADA compliant (when installed with trip lever located on the approach side)

KOHLER® FAUCETS

PURIST®

PULL-OUT KITCHEN SINK FAUCET
K-7505
ALSO K-7506

ADA



Features

- *Metal construction*
- *One-piece, self-contained ceramic disc valve allows both volume and temperature control*
- *Temperature memory allows faucet to be turned on and off at any temperature setting*
- *Promotion™ technology with nylon hose and ball joint for easy operation*
- *Contemporary styling*
- *Three-function sprayhead with spray, laminar flow, and pause settings*
- *360° spout rotation*
- *8" (203 mm) or 7" (178 mm) spout reach*
- *1.8 gallons (6.8 L) per minute maximum flow rate at 60 psi (4.1 bar)*
- *Meets CalGreen requirements for kitchen faucets*

Codes/Standards Applicable

Specified model meets or exceeds the following:

- *ADA*
- *ASME A112.18.1/CSA B125.1*
- *ICC/ANSI A117.1*
- *Energy Policy Act of 2005*
- *NSF 61*
- *All applicable US Federal and State material regulations*

Colors/Finishes

- CP: Polished Chrome
- Other: Refer to Price Book for additional colors/finishes

Accessories

- NA: None applicable

Specified Model

Model	Description	Colors/Finishes
K-7505	Pull-out kitchen sink faucet – 8" (203 mm) spout reach	❑ CP ❑ Other ____
K-7506	Pull-out kitchen sink faucet – 7" (178 mm) spout reach	❑ CP ❑ Other ____

Optional Accessories		
1012715	Deep rough-in kit	❑ NA
1055715	Low flow kit – reduces maximum flow to 1.5 gpm (5.7 L) at 60 psi (4.1 bar)	❑ NA

hansgrohe

Croma 100
Showerhead E 3-Jet, 1.8 GPM
Finishes : **chrome** Part no. : **04733000**

Description

Features
- 75 no-clog spray channels
- Spray modes: Full, Pulsating Massage, Intense Turbo
- Flow: 1.8 GPM (6.8 L/Min)

1

Item details

List Price $ 93.00

Technology

Eco Right · Quick Clean

Compliance

cULus · WaterSense

Product image



Scale drawing

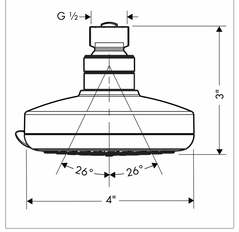

hansgrohe

Axor Uno
Axor Uno Single-Hole Faucet, High Spout
Finishes : **Chrome** Part no. : **38030001**

Description

Features
- Aerated spray
- Flow: 1.5 GPM
- Ceramic cartridge
- Includes pop-up assembly
- Swivel range 150°

Item details

List Price $ 693.00

Technology

Soft Smart · Comfort Zone

Compliance

ADA · cULus · WaterSense

Product image



Scale drawing

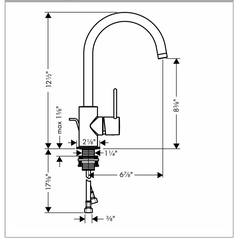

hansgrohe

Axor Starck X
Axor Starck X Thermostatic Trim with Volume Control
Finishes : **Chrome** Part no. : **10706001**

Description

Features
- Volume control for 1 outlet
- Thermostatic cartridge
- Ceramic cartridge
- Anti-scald 100° safety stop
- Flow: 6 GPM

Required accessories
- iBox Universal Plus Rough with Service Stops, ¾" (#01850USA)

Optional accessories
- Shallow Extension Set, Thermostatic Trim, ¼" (#97407XXX)

Item details

List Price $ 880.00

Compliance

cULus

Product image



Scale drawing

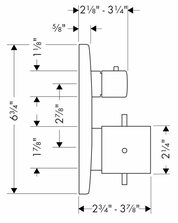

DORN BRACHT

Shower - Tara.Logic
Hand shower set - polished chrome
Article number: 27 806 625-00 0010



- Standard spray
- Descaling system
- Flange diameter 2-1/8"
- Metal shower hose 49-1/4" with anti-twist device
- Showerhead holder flange Ø 2-1/8"
- Water flow rate limited to max. 1.8 gpm
- Internal backflow preventer.

polished chrome

KOHLER. Faucets

Awaken® B110
Premium Slidebar Kit
K-99899-G

Features
- Handshower features transitional design
- Three spray modes and ADA non-positive shut off.
- Thumb tab allows for a smooth transition between sprays.
- MasterClean™ sprayface is easy to clean.
- 36-inch slidebar features adjustable mounting brackets for installation flexibility.
- Includes 60-inch metal hose.
- ADA compliant.

Water Conservation & Rebates
- WaterSense®-labeled 1.75-gpm handshowers use up to 30 percent less water than standard 2.5-gpm handshowers, while still meeting strict performance guidelines.
- This product can help a building earn Water Efficiency points in the LEED® Green Building Rating System.

Optional Accessories
K-98350 wall-mount supply elbow
K-98351 wall-mount supply elbow with check valve



ADA | OBC

Codes/Standards
ASME A112.18.1/CSA B125.1
DOE - Energy Policy Act 1992
EPA WaterSense®
California Energy Commission (CEC)
ADA
ICC/ANSI A117.1
OBC

1

KOHLER® Faucet Lifetime Limited Warranty
See website for detailed warranty information.

Available Color/Finishes
Color tiles intended for reference only.

Color	Code	Description
	CP	Polished Chrome
	BN	Vibrant® Brushed Nickel

Bath & Spa
36426670 Concealed thermostat trim with two-way volume control
Article number: 36426670

DORN BRACHT



Product specifications

Exposed trim parts only, rough to be ordered separately
- 2x sleeve with adapter, can be cut to length
- Diverter and volume control with ceramic discs
- Thermostat cartridge
- Cover plate 5 7/8" x 3 1/2"
- Handle with lever
- 2x mounting nut M 32 x 1
- **Temperature control handle with safety lock at 100 °F/ 38°C**
- max temperature can be set on the trim

[ADA]

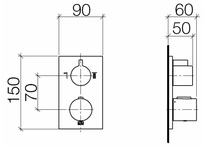

THESE DRAWINGS ARE THE ORIGINAL UNPUBLISHED WORK OF MODERN HOUSE AND MAY NOT BE USED OR DISCLOSED WITHOUT THE WRITTEN PERMISSION OF THE ARCHITECT.
© MODERN HOUSE

MODERN HOUSE
ARCHITECTURE & DESIGN
1265 Indiana Street
San Francisco Ca. 94107
P. 415.800.8520
C. 415.596.7281
modernhouse@mac.com
www.modernhousearchitects.com

LICENSED ARCHITECT · CURTIS C. CLINE · C26383 · 6.30.21 RENEWAL DATE · STATE OF CALIFORNIA

Curt Cline Architect

BUILDING PERMIT REVIEW

029-35-005

PANGAN RESIDENCE

AUGUSTA CT
MILPITAS, CA

Revisions:

1	BUILDING COMMENTS 11/29/2018

INTERIOR SPECIFICATIONS

SCALE : AS NOTED

DATE : 07.26.2018

SHEET : **A7.3**

FILE PATH: I:\Users\moderndesigncc\Dropbox\000 ARCHICAD FILES\Pangan Arch\CAD\PANGEN_BUILDING_Comments2_10062020.pln • LAST SAVED BY: Modern House - Natsumi • PRINTED ON 4/27/21 @ 3:28 PM
PROJECT COMPANY • PANGAN RESIDENCE • *** PROJECT NUMBER *** • A8.1

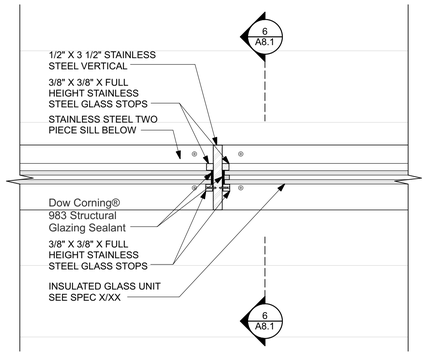

5 A8.1 PLAN AT TYPICAL FIXED GLASS WALL

SCALE: 3" = 1'-0"

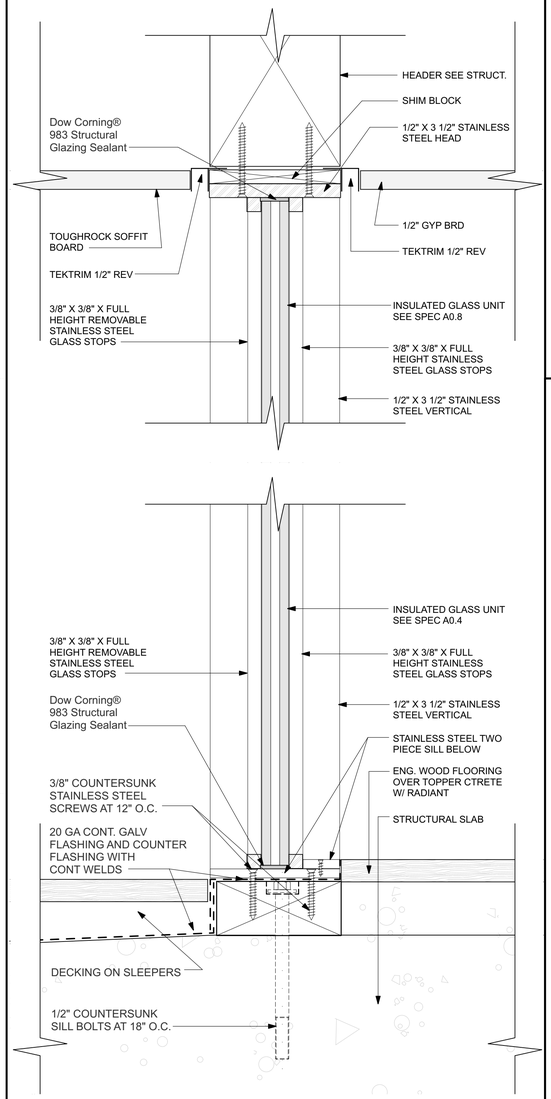

6 A8.1 SECTION AT TYPICAL FIXED GLASS WALL

SCALE: 6" = 1'-0"

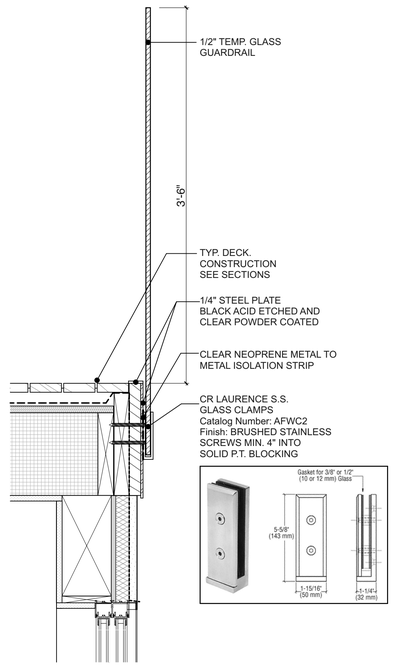

3 A8.1 DETAIL AT GLASS GUARDRAIL

SCALE: 1 1/2"= 1'-0"

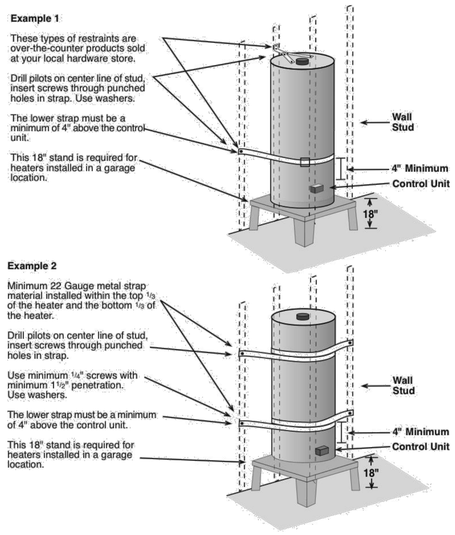

1 A8.1 HOT WATER HEATER STRAPING

SCALE: 1:0.84

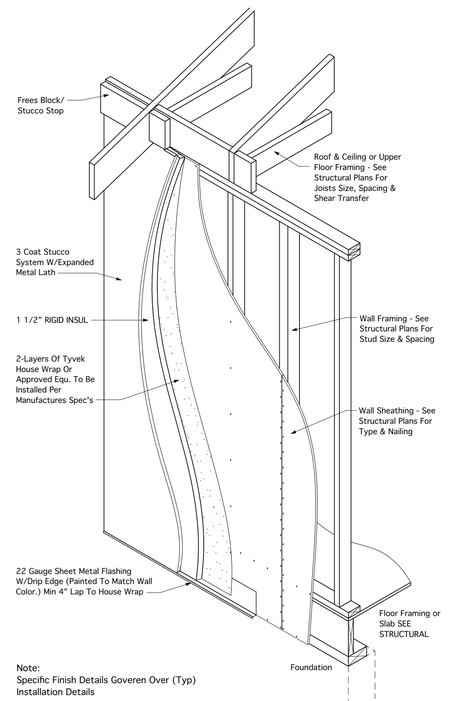

4 A8.1 TYP. STUCCO WALL CONST.

NOT TO SCALE

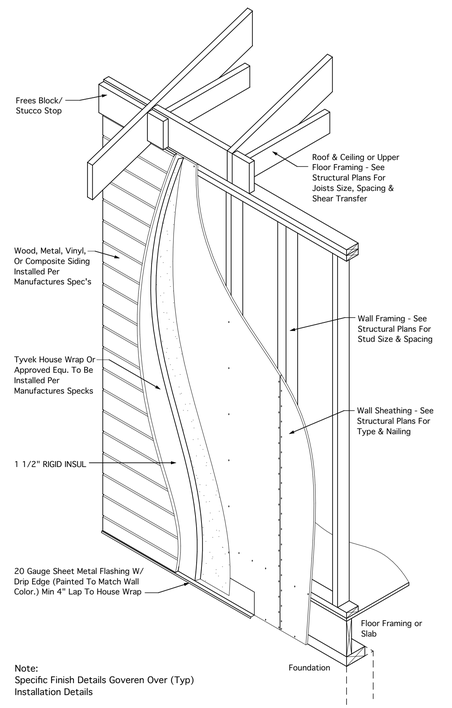

2 A8.1 TYP. WOOD SIDING WALL CONST.

NOT TO SCALE

THESE DRAWINGS ARE THE ORIGINAL UNPUBLISHED WORK OF THE ARCHITECT AND MAY NOT BE USED OR DISCLOSED WITHOUT THE WRITTEN PERMISSION OF THE ARCHITECT.
©MODERN HOUSE

MODERN HOUSE
ARCHITECTURE
& DESIGN
1265 Indiana Street
San Francisco Ca. 94107
P. 415.800.8520
C. 415.596.7281
modernhouse@mac.com
www.modernhousearchitects.com

LICENSED ARCHITECT
CURTIS C. CLINE
C26383
6.30.21
RENEWAL DATE
STATE OF CALIFORNIA

Curt Cline Architect

BUILDING PERMIT REVIEW

029-35-005

PANGAN RESIDENCE

AUGUSTA CT
MILPITAS, CA

Revisions:

DETAILS

SCALE : AS NOTED

DATE : 07.26.2018

SHEET : A8.1

FILE PATH: //Users/modernidesignco/Dropbox/000 ARCHICAD FILES/Pangan ArchiCAD/PANGEN_BUILDING_Comments2_10062020.pln • LAST SAVED BY: Modern House - Natsumi • PRINTED ON 4/27/21 @ 3:28 PM
PROJECT COMPANY • PANGAN RESIDENCE • *** PROJECT NUMBER *** • A8.2

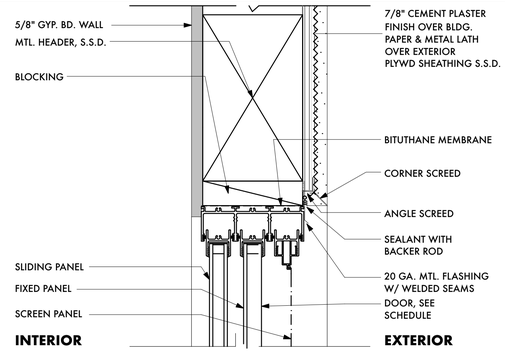

4 / A8.2 DOOR HEAD W/ STUCCO

SCALE: 3" = 1'-0"

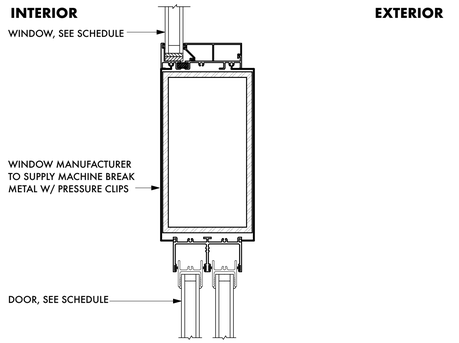

6 / A8.2 DOOR HEAD WITH TRANSOM

SCALE: 3" = 1'-0"

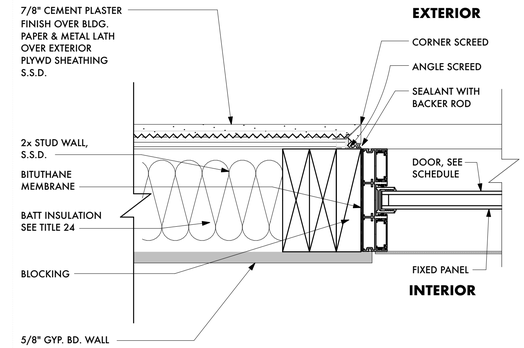

3 / A8.2 DOOR FIXED JAMB

SCALE: 3" = 1'-0"

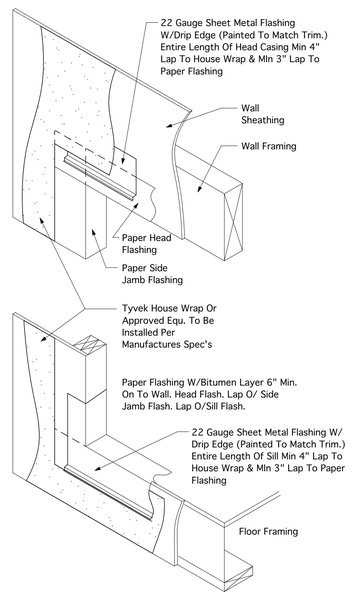

5 / A8.2 TYPICAL EXTERIOR DOOR FLASHING

SCALE: 1" = 1'-0"

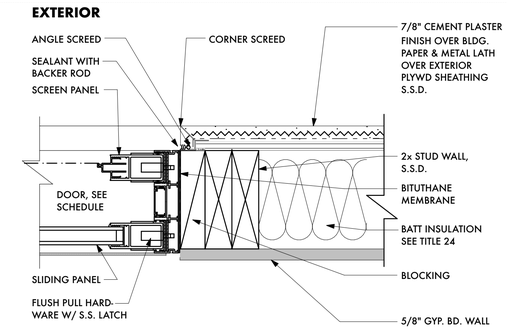

2 / A8.2 DOOR LOCK JAMB

SCALE: 3" = 1'-0"

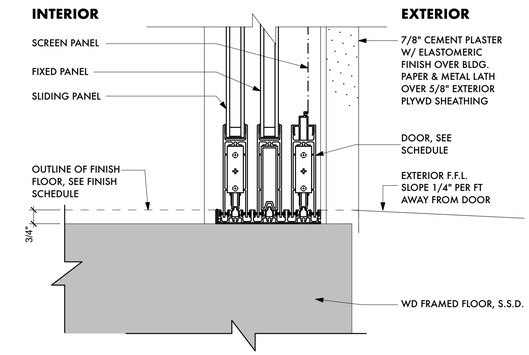

1 / A8.2 DOOR SILL

SCALE: 3" = 1'-0"

THESE DRAWINGS ARE THE ORIGINAL UNPUBLISHED WORK OF THE ARCHITECT AND MAY NOT BE USED OR DISCLOSED WITHOUT THE WRITTEN PERMISSION OF THE ARCHITECT.
©MODERN HOUSE

MODERN HOUSE
ARCHITECTURE & DESIGN
1265 Indiana Street
San Francisco Ca. 94107
P. 415.800.8520
C. 415.596.7281
modernhouse@mac.com
www.modernhousearchitects.com

LICENSED ARCHITECT CURTIS C. CLINE C26383 6.30.21 RENEWAL DATE STATE OF CALIFORNIA

Curt Cline Architect

BUILDING PERMIT REVIEW

029-35-005

PANGAN RESIDENCE

AUGUSTA CT
MILPITAS, CA

Revisions:

DOOR DETAILS

SCALE : AS NOTED

DATE : 07.26.2018

SHEET : **A8.2**

FILE PATH: /Users/moderndesignco/Dropbox/000 ARCHICAD FILES/Pangan ArchiCAD/PANGEN_BUILDING_Comments2_10062020.pln • LAST SAVED BY: Modern House - Natsumi • PRINTED ON 4/27/21 @ 3:28 PM
PROJECT COMPANY • PANGAN RESIDENCE • *** PROJECT NUMBER *** • A8.3

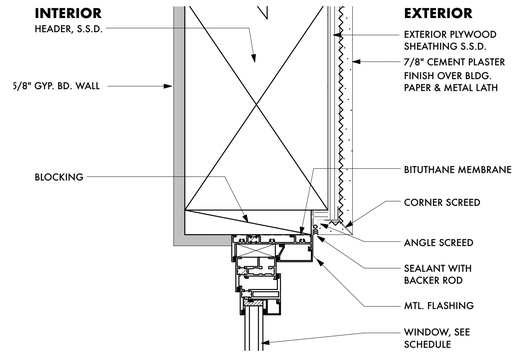

8 A8.3 **OPERABLE WINDOW HEAD**
SCALE: 3" = 1'-0"

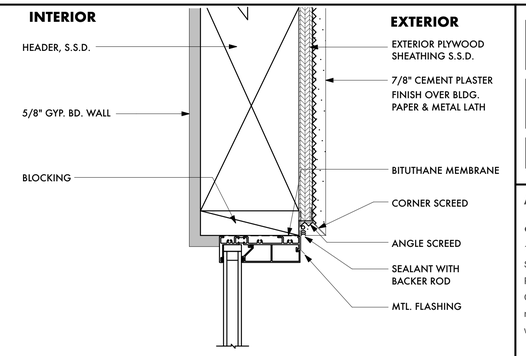

4 A8.3 **FIXED WINDOW HEAD**
SCALE: 3" = 1'-0"

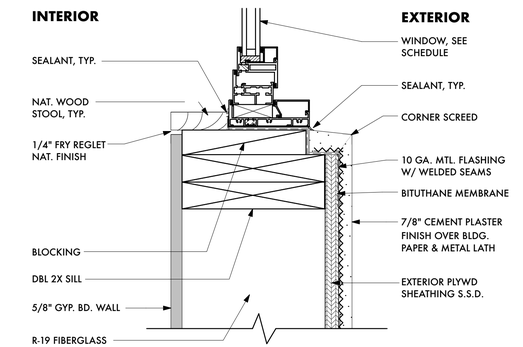

7 A8.3 **OPERABLE WINDOW SILL**
SCALE: 3" = 1'-0"

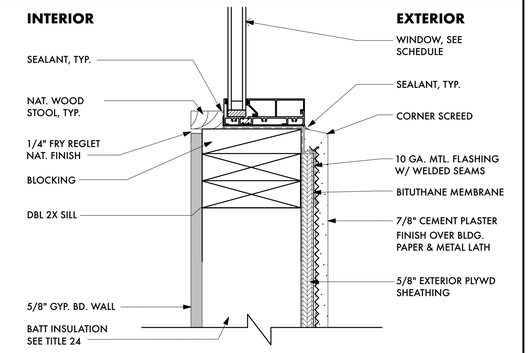

3 A8.3 **FIXED WINDOW SILL**
SCALE: 3" = 1'-0"

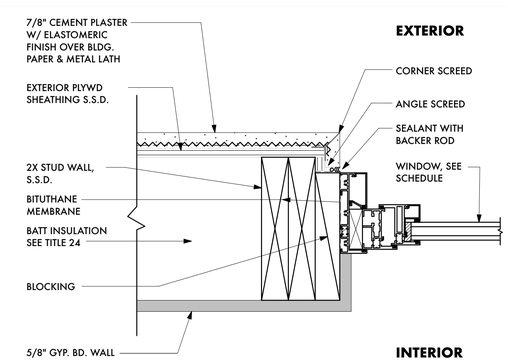

6 A8.3 **OPERABLE WINDOW JAMB**
SCALE: 3" = 1'-0"

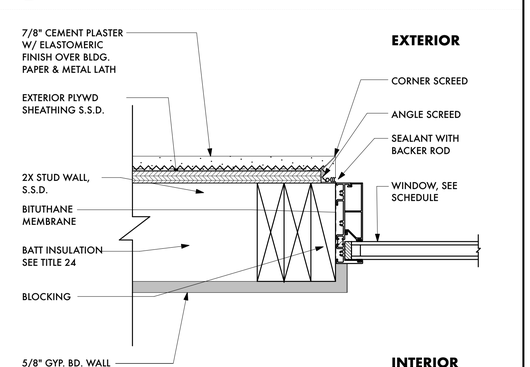

2 A8.3 **FIXED WINDOW JAMB**
SCALE: 3" = 1'-0"

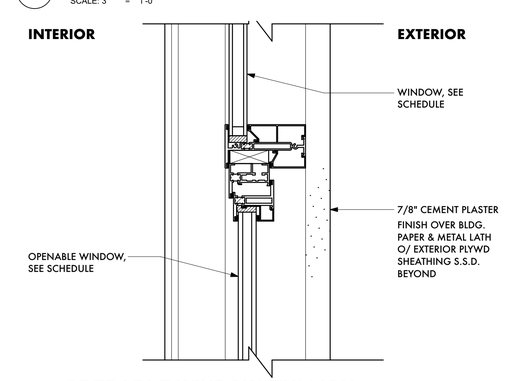

5 A8.3 **OPERABLE WINDOW MULLION**
SCALE: 3" = 1'-0"

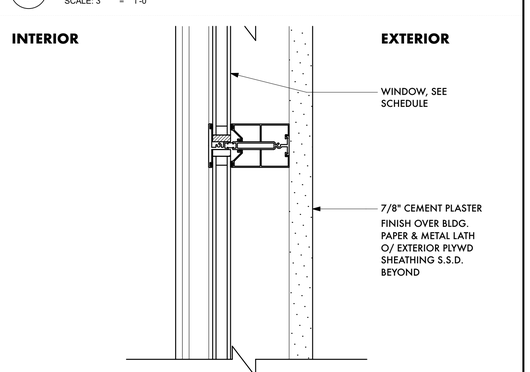

1 A8.3 **FIXED WINDOW MULLION**
SCALE: 3" = 1'-0"

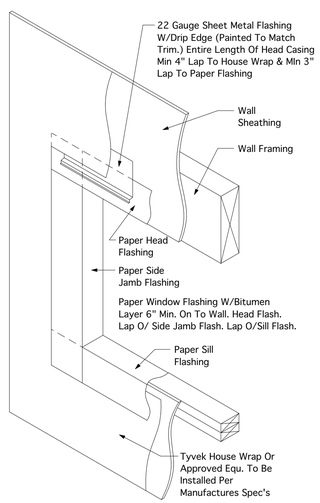

9 A8.3 **TYPICAL EXTERIOR WINDOW FLASHING**
SCALE: 1" = 1'-0"

THESE DRAWINGS ARE THE ORIGINAL UNPUBLISHED WORK OF THE ARCHITECT AND ARE NOT TO BE USED OR REVISED WITHOUT THE WRITTEN PERMISSION OF THE ARCHITECT.
© MODERN HOUSE

MODERN HOUSE
ARCHITECTURE & DESIGN
1265 Indiana Street
San Francisco Ca. 94107
P. 415.800.8520
C. 415.596.7281
modernhouse@mac.com
www.modernhousearchitects.com

LICENSED ARCHITECT CURTIS C. CLINE C26383 6.30.21 RENEWAL DATE STATE OF CALIFORNIA

Curt Cline Architect

BUILDING PERMIT REVIEW

029-35-005

PANGAN RESIDENCE

AUGUSTA CT
MILPITAS, CA

Revisions:

WINDOW DETAILS

SCALE : AS NOTED

DATE : 07.26.2018

SHEET : **A8.3**

FILE PATH: /Users/modernidesignco/Dropbox/000 ARCHICAD FILES/Pangan ArchiCAD/PANGEN_BUILDING_Comments2_10062020.pln • LAST SAVED BY: Modern House - Natsumi • PRINTED ON 4/27/21 @ 3:29 PM
PROJECT COMPANY • PANGAN RESIDENCE • *** PROJECT NUMBER *** • A8.4

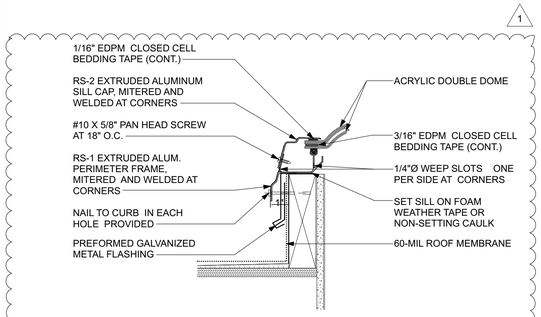

8 / A8.4 SKYLIGHT DETAIL
NOT TO SCALE

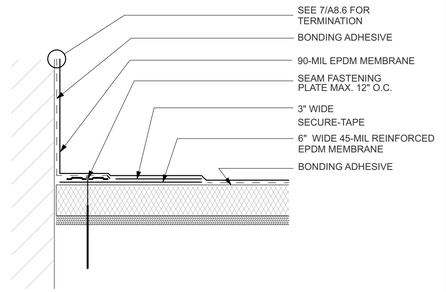

4 / A8.4 ROOF TO WALL FLASHING DETAIL (BASE)
NOT TO SCALE

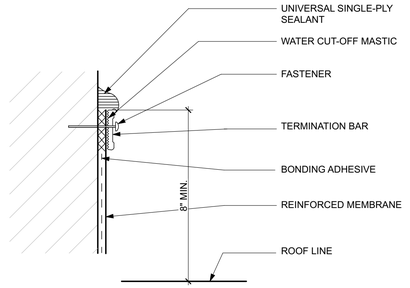

7 / A8.4 ROOF TO SOILD WALL FLASHING (TOP)
NOT TO SCALE

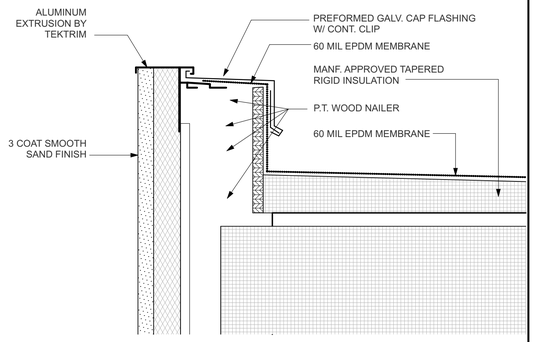

3 / A8.4 TYPICAL PARAPET
NOT TO SCALE

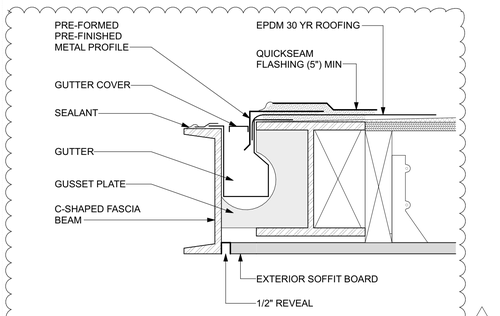

6 / A8.4 ROOF GUTTER DETAIL
NOT TO SCALE

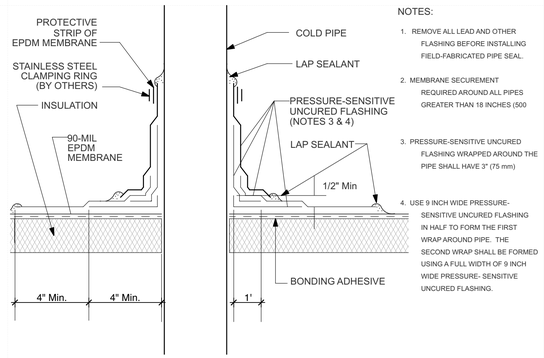

2 / A8.4 COOL VENT STACK
NOT TO SCALE

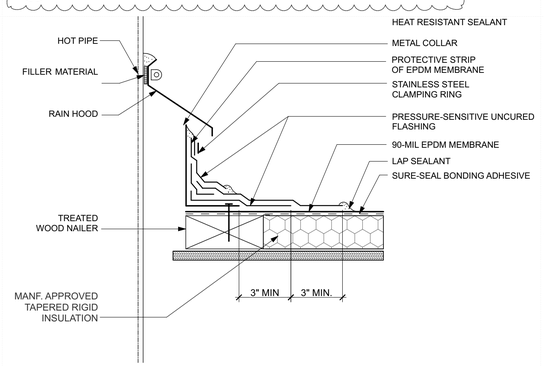

5 / A8.4 HOT VENT STACK
NOT TO SCALE

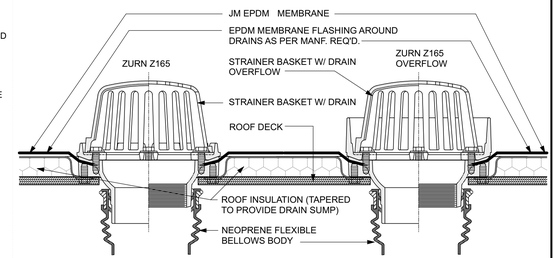

1 / A8.4 ROOF DRAIN
NOT TO SCALE

THESE DRAWINGS ARE THE ORIGINAL UNPUBLISHED WORK OF THE ARCHITECT AND MAY NOT BE USED OR DISCLOSED WITHOUT THE WRITTEN PERMISSION OF THE ARCHITECT.
©MODERN HOUSE

MODERN HOUSE
ARCHITECTURE & DESIGN
1265 Indiana Street
San Francisco Ca. 94107
P. 415.800.8520
C. 415.596.7281
modernhouse@mac.com
www.modernhousearchitects.com

LICENSED ARCHITECT CURTIS C. CLINE C26383 6.30.21 RENEWAL DATE STATE OF CALIFORNIA

Curt Cline Architect

BUILDING PERMIT REVIEW

029-35-005

PANGAN RESIDENCE

AUGUSTA CT
MILPITAS, CA

Revisions:

1	BUILDING COMMENTS 11/29/2018

ROOF DETAILS

SCALE : AS NOTED

DATE : 07.26.2018

SHEET : **A8.4**

FILE PATH: /Users/moderndesignco/Dropbox/000 ARCHICAD FILES/Pangan ArchiCAD/PANGEN_BUILDING_Comments2_10062020.pln • LAST SAVED BY: Modern House - Natsumi • PRINTED ON 4/27/21 @ 3:29 PM
PROJECT COMPANY • PANGAN RESIDENCE • *** PROJECT NUMBER *** • A9.1

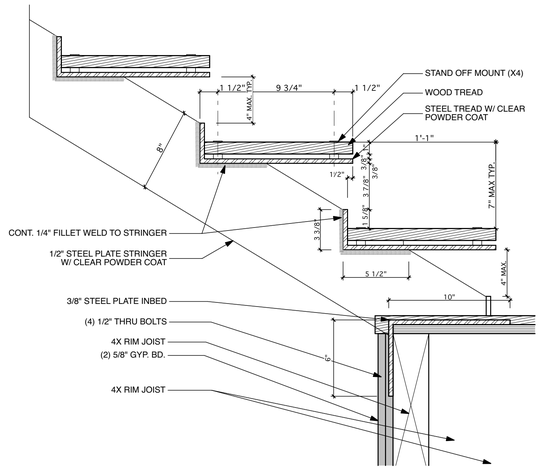

3 A9.1 **DETAIL AT LANDING TO STRINGER**

SCALE: 1:6

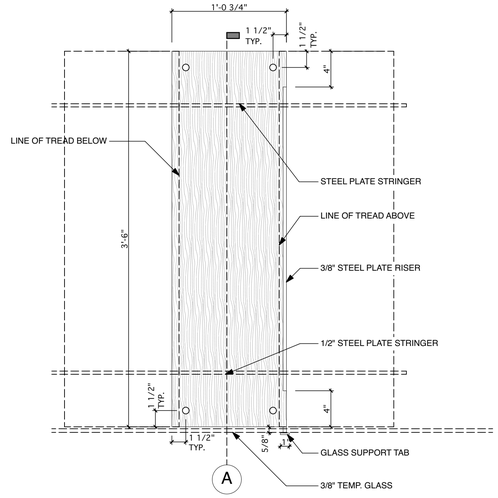

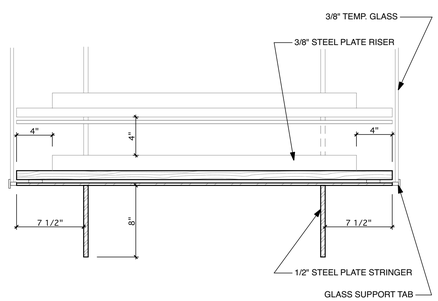

A LONG SECTION AT TREAD

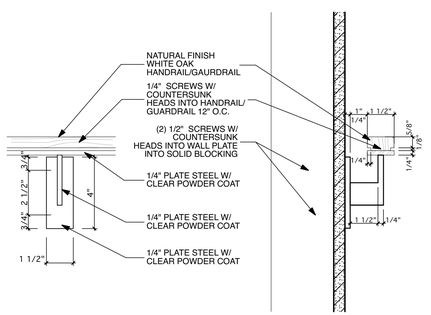

4 A9.1 **WALL MNT. HANDRAIL DETAIL**

SCALE: 3" = 1'-0"

2 A9.1 **TYPICAL STAIR TREAD**

SCALE: 1 1/2"= 1'-0"

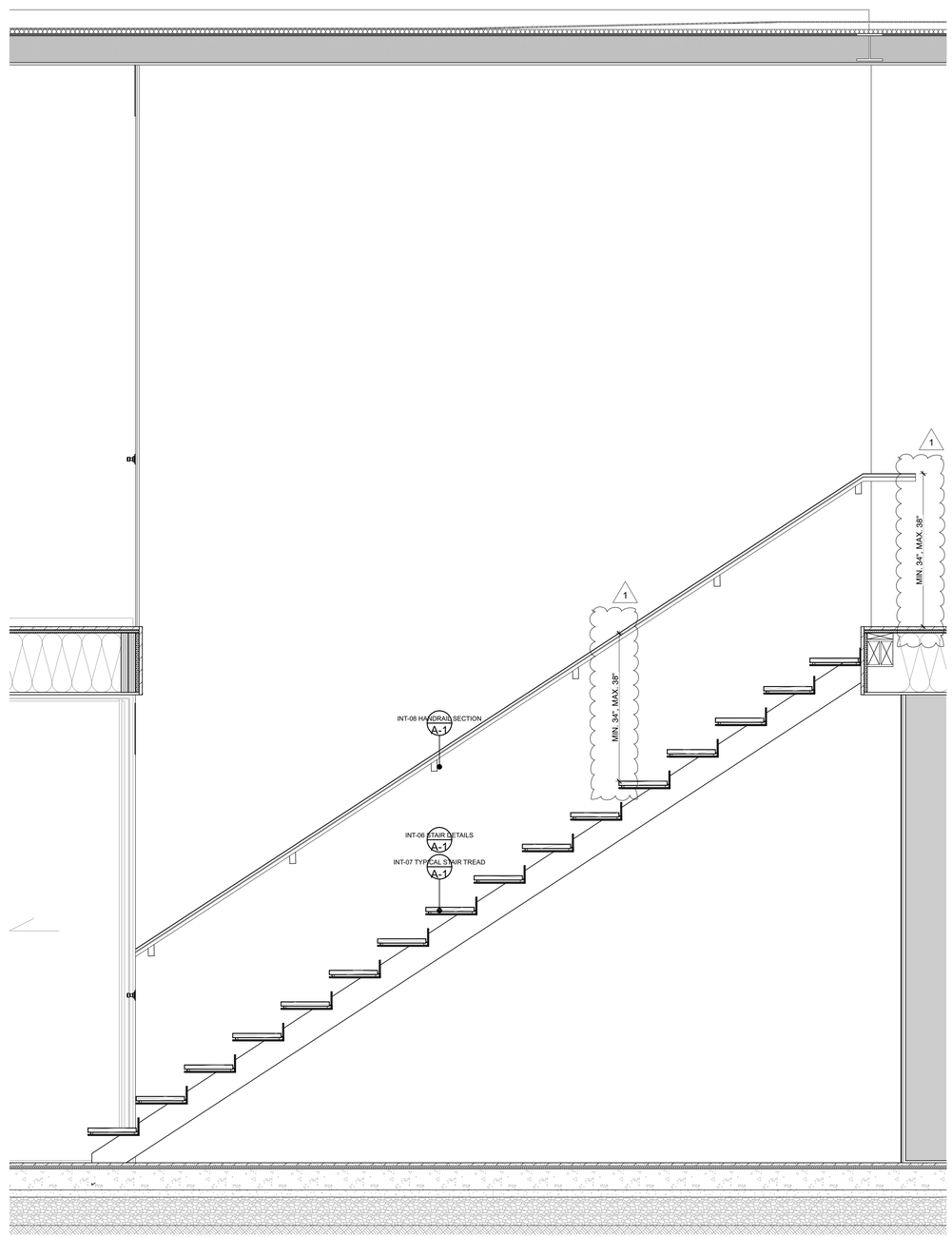

1 A9.1 **SECTION AT STAIRWAY**

SCALE: 3/4" = 1'-0"

THESE DRAWINGS ARE THE ORIGINAL UNPUBLISHED WORK OF THE ARCHITECT AND MAY NOT BE USED OR DISCLOSED WITHOUT THE WRITTEN PERMISSION OF THE ARCHITECT
©MODERN HOUSE

MODERN HOUSE
ARCHITECTURE & DESIGN
1265 Indiana Street
San Francisco Ca. 94107
P. 415.800.8520
C. 415.596.7281
modernhouse@mac.com
www.modernhousearchitects.com

LICENSED ARCHITECT CURTIS C. CLINE C26383 6.30.21 RENEWAL DATE STATE OF CALIFORNIA

Curt Cline Architect

BUILDING PERMIT REVIEW

029-35-005

PANGAN RESIDENCE

AUGUSTA CT
MILPITAS, CA

Revisions:

1	BUILDING COMMENTS 11/29/2018

STAIR SECTIONS/ DETAILS

SCALE : AS NOTED

DATE : 07.26.2018

SHEET : **A9.1**

FILE PATH: \Users\modernhouse\Dropbox\000 ARCHICAD FILES\Pangan Arch\CAD\PANGEN_BUILDING_Comments2_10062020.pln • LAST SAVED BY: Modern House - Natsumi • PRINTED ON 4/27/21 @ 3:29 PM
PROJECT COMPANY • PANGAN RESIDENCE • *** PROJECT NUMBER *** • T-1

CERTIFICATE OF COMPLIANCE - RESIDENTIAL PERFORMANCE COMPLIANCE METHOD — CF1R-PRF-01
Project Name: Pangan Residence — **Calculation Date/Time:** 13:11, Fri, Feb 16, 2018 — **Page 7 of 13**
Calculation Description: v1 — **Input File Name:** T24_Pangan_MH_v0.ribd16

OVERHANGS AND FINS

01	02	03	04	05	06	07	08	09	10	11	12	13	14
	Overhang					Left Fin				Right Fin			
Window	Depth	Dist Up	Left Extent	Right Extent	Flap Ht.	Depth	Top Up	Dist L	Bot Up	Depth	Top Up	Dist R	Bot Up
1-1st-GlDr-D-12-New-0	6	0.5	10	15	0	0	0	0	0	0	0	0	0
1-1st-GlDr-D-13-New-0	6	0.5	10	15	0	0	0	0	0	5	8	0.5	0
1-1st-GlDr-D-15-New-0	0	0	0	0	0	0	0	0	0	0	0	0	0
1-1st-Win-W-30-New-90	9	0.5	0.5	15	0	2.5	8	0.5	0	0	0	0	0
1-1st-Win-W-31-New-90	9	0.5	4	12	0	2.5	8	4	0	0	0	0	0
1-1st-Win-W-32-New-90	9	0.5	12	4	0	0	0	0	0	2.5	8	0.5	0
1-1st-Win-W-33-New-90	9	0.5	15	1	0	0	0	0	0	2.5	8	4	0
1-1st-GlDr-D-14-New-90	30	0.5	10	6	0	20	8	0.5	0	0	0	0	0
2-2nd-Win-W-12-New-0	7.5	0.5	10	10	0	0	0	0	0	7.5	3	9	0
2-2nd-Win-W-13-New-0	7.5	0.5	10	10	0	0	0	0	0	7.5	3	6	0
2-2nd-Win-W-14-New-0	7.5	0.5	10	10	0	0	0	0	0	7.5	3	3	0
2-2nd-Win-W-15-New-0	7.5	0.5	10	10	0	0	0	0	0	7.5	3	0.1	0
2-2nd-Win-W-16-New-0	0	0	0	0	0	0	0	0	0	0	0	0	0
2-2nd-Win-W-17-New-0	0	0	0	0	0	0	0	0	0	0	0	0	0
2-2nd-Win-W-18-New-0	0	0	0	0	0	0	0	0	0	0	0	0	0
2-2nd-GlDr-D-06-New-0	7.5	0.5	10	10	0	7.5	3	0.1	0	0	0	0	0
2-2nd-GlDr-D-07-New-0	2.5	0.5	10	10	0	0	0	0	0	0	0	0	0
2-2nd-GlDr-D-03-New-90	7.5	0.5	10	10	0	0	0	0	0	0	0	0	0
2-2nd-GlDr-D-05-New-90	7.5	0.5	10	10	0	0	0	0	0	0	0	0	0
2-2nd-GlDr-D-05-New-90 2	20	0.5	10	5	0	15	3	0.1	0	0	0	0	0
2-2nd-Win-W-04-New-180	6	0.5	10	10	0	0	0	0	0	0	0	0	0
2-2nd-Win-W-05-New-180	6	0.5	10	10	0	0	0	0	0	0	0	0	0
2-2nd-Win-W-06-New-180	6	0.5	10	10	0	0	0	0	0	0	0	0	0
2-2nd-Win-W-07-New-180	6	0.5	10	10	0	0	0	0	0	0	0	0	0
2-2nd-GlDr-D-02-New-180	6	0.5	10	10	0	0	0	0	0	0	0	0	0
2-2nd-Win-W-08-New-180	6	0.5	10	10	0	0	0	0	0	0	0	0	0
2-2nd-Win-W-09-New-180	6	0.5	10	10	0	0	0	0	0	0	0	0	0
2-2nd-Win-W-10-New-180	6	0.5	10	10	0	0	0	0	0	0	0	0	0

Registration Number: 218-P010658846A-000-000-0000000-0000 — Registration Date/Time: 2018-07-11 10:39:52 — HERS Provider: CalCERTS inc.
CA Building Energy Efficiency Standards - 2016 Residential Compliance — Report Version - CF1R-02052018-1016 SP2 — Report Generated at: 2018-02-16 13:12:41

CERTIFICATE OF COMPLIANCE - RESIDENTIAL PERFORMANCE COMPLIANCE METHOD — CF1R-PRF-01
Project Name: Pangan Residence — **Calculation Date/Time:** 13:11, Fri, Feb 16, 2018 — **Page 4 of 13**
Calculation Description: v1 — **Input File Name:** T24_Pangan_MH_v0.ribd16

OPAQUE SURFACES – Cathedral Ceilings

01	02	03	04	05		06	07	08	09	10	11
Name	Zone	Type	Orientation	Area (ft²)	Skylight Area (ft2)	Roof Rise (x in 12)	Roof Pitch	Roof Tilt (deg)	Roof Reflectance	Roof Emittance	Framing Factor
2-2-roof-New-0_12	2nd-Living	Cathedral Assembly	- specify -	1025	34	0.25	0.02	1.19	0.6	0.85	0.1
2-2-roof-New-0_12-2	2nd-Master	Cathedral Assembly	- specify -	729	0	0.25	0.02	1.19	0.6	0.85	0.1

Registration Number: 218-P010658846A-000-000-0000000-0000 — Registration Date/Time: 2018-07-11 10:39:52 — HERS Provider: CalCERTS inc.
CA Building Energy Efficiency Standards - 2016 Residential Compliance — Report Version - CF1R-02052018-1016 SP2 — Report Generated at: 2018-02-16 13:12:41

CERTIFICATE OF COMPLIANCE - RESIDENTIAL PERFORMANCE COMPLIANCE METHOD — CF1R-PRF-01
Project Name: Pangan Residence — **Calculation Date/Time:** 13:11, Fri, Feb 16, 2018 — **Page 1 of 13**
Calculation Description: v1 — **Input File Name:** T24_Pangan_MH_v0.ribd16

GENERAL INFORMATION

01	Project Name	Pangan Residence			
02	Calculation Description	v1			
03	Project Location	Augusta Rd.			
04	City	Milpitas, CA	05	Standards Version	Compliance 2017
06	Zip Code	95035	07	Compliance Manager Version	BEMCmpMgr 2016.3.0 (1016 SP2)
08	Climate Zone	CZ4	09	Software Version	CBECC-Res 2016.3.0 SP2 (977)
10	Building Type	Single Family	11	Front Orientation (deg/Cardinal)	90
12	Project Scope	Newly Constructed	13	Number of Dwelling Units	1
14	Total Cond. Floor Area (ft²)	2594	15	Number of Zones	3
16	Slab Area (ft²)	838	17	Number of Stories	2
18	Addition Cond. Floor Area(ft²)	n/a	19	Natural Gas Available	Yes
20	Addition Slab Area (ft²)	n/a	21	Glazing Percentage (%)	102.5%

COMPLIANCE RESULTS

01	Building Complies with Computer Performance
02	This building incorporates features that require field testing and/or verification by a certified HERS rater under the supervision of a CEC-approved HERS provider.
03	This building incorporates one or more Special Features shown below

ENERGY USE SUMMARY

04	05	06	07	08
Energy Use (kTDV/ft²-yr)	Standard Design	Proposed Design	Compliance Margin	Percent Improvement
Space Heating	32.26	37.54	-5.28	-16.4%
Space Cooling	6.89	12.66	-5.77	-83.7%
IAQ Ventilation	2.96	2.96	0.00	0.0%
Water Heating	7.21	3.79	3.42	47.4%
Photovoltaic Offset	----	-8.73	8.73	----
Compliance Energy Total	**49.32**	**48.22**	**1.10**	**2.2%**

Registration Number: 218-P010658846A-000-000-0000000-0000 — Registration Date/Time: 2018-07-11 10:39:52 — HERS Provider: CalCERTS inc.
CA Building Energy Efficiency Standards - 2016 Residential Compliance — Report Version - CF1R-02052018-1016 SP2 — Report Generated at: 2018-02-16 13:12:41

CERTIFICATE OF COMPLIANCE - RESIDENTIAL PERFORMANCE COMPLIANCE METHOD — CF1R-PRF-01
Project Name: Pangan Residence — **Calculation Date/Time:** 13:11, Fri, Feb 16, 2018 — **Page 8 of 13**
Calculation Description: v1 — **Input File Name:** T24_Pangan_MH_v0.ribd16

2-2nd-Win-W-11-New-180	6	0.5	10	10	0	0	0	0	0	0	0	0	0
2-2nd-Win-W-21-New-270	12	0.5	5	5	0	10	3	0.5	0	0	0	0	0
2-2nd-Win-W-01-New-270	0	0	0	0	0	0	0	0	0	0	0	0	0
2-2nd-Win-W-02-New-270	0	0	0	0	0	0	0	0	0	0	0	0	0
2-2nd-Win-W-03-New-270	0	0	0	0	0	0	0	0	0	0	0	0	0
2-2nd-GlDr-D-01-New-270	8	0.5	10	10	0	0	0	0	0	0	0	0	0
2-2nd-GlDr-D-08-New-0-2	6	0.5	10	10	0	3.5	3	0.1	0	5	3	0.1	0
2-2nd-Win-W-29-New-0-2	2	0.5	10	10	0	0	0	0	0	0	0	0	0
2-2nd-Win-W-28-New-0-2	2.5	0.5	10	10	0	1.5	3	0.1	0	1.5	3	0.1	0
2-2nd-Win-W-27-New-0-2	6	0.5	10	10	0	5	3	0.1	0	0	0	0	0
2-2nd-Win-W-26-New-0-2	6	0.5	10	10	0	5	3	3	0	0	0	0	0
2-2nd-Win-W-25-New-0-2	6	0.5	10	10	0	5	3	6	0	0	0	0	0
2-2nd-Win-W-19-New-90-2	10	0.5	6	20	0	0	0	0	0	13	3	0.1	0
2-2nd-Win-W-24-New-180-2	6	0.5	10	10	0	0	0	0	0	5	3	6	0
2-2nd-Win-W-23-New-180-2	6	0.5	10	10	0	0	0	0	0	5	3	3	0
2-2nd-Win-W-22-New-180-2	6	0.5	10	10	0	0	0	0	0	5	3	0.5	0
2-2nd-Win-W-20-New-180-2	2.3333	0.5	20	20	0	2	3	0.1	0	2	3	0.1	0
2-2nd-GlDr-D-09-New-180-2	8	0.5	20	1	0	6	0.1	3	0	0	0	0	0
2-2nd-Win-W-21-New-270-2	12	0.5	5	5	0	10	3	0.5	0	0	0	0	0
2-2nd-GlDr-D-10-New-270-2	8	0.5	10	10	0	0	0	0	0	0	0	0	0
2-2nd-GlDr-D-11-New-270-2	8	0.5	10	10	0	0	0	0	0	0	0	0	0

Registration Number: 218-P010658846A-000-000-0000000-0000 — Registration Date/Time: 2018-07-11 10:39:52 — HERS Provider: CalCERTS inc.
CA Building Energy Efficiency Standards - 2016 Residential Compliance — Report Version - CF1R-02052018-1016 SP2 — Report Generated at: 2018-02-16 13:12:41

CERTIFICATE OF COMPLIANCE - RESIDENTIAL PERFORMANCE COMPLIANCE METHOD — CF1R-PRF-01
Project Name: Pangan Residence — **Calculation Date/Time:** 13:11, Fri, Feb 16, 2018 — **Page 5 of 13**
Calculation Description: v1 — **Input File Name:** T24_Pangan_MH_v0.ribd16

FENESTRATION / GLAZING

01	02	03	04	05	06	07	08	09	10
Name	Type	Surface (Orientation-Azimuth)	Width (ft)	Height (ft)	Multiplier	Area (ft²)	U-factor	SHGC	Exterior Shading
1-1st-GlDr-D-12-New-0	Window	1--1st-New-ExtWall concrete-0 (- specify --90)	7.5	7.2	1	53.8	0.35	0.20	Insect Screen (default)
1-1st-GlDr-D-13-New-0	Window	1--1st-New-ExtWall concrete-0 (- specify --90)	13.8	7.2	1	98.5	0.35	0.20	Insect Screen (default)
1-1st-GlDr-D-15-New-0	Window	1--1st-New-ExtWall-0 (- specify --90)	5.7	7.2	1	40.6	0.35	0.20	Insect Screen (default)
1-1st-Win-W-30-New-90	Window	1--1st-New-ExtWall-90 (- specify --180)	4.1	9.4	1	38.8	0.35	0.20	Insect Screen (default)
1-1st-Win-W-31-New-90	Window	1--1st-New-ExtWall-90 (- specify --180)	4.1	9.4	1	38.8	0.35	0.20	Insect Screen (default)
1-1st-Win-W-32-New-90	Window	1--1st-New-ExtWall-90 (- specify --180)	4.1	9.4	1	38.8	0.35	0.20	Insect Screen (default)
1-1st-Win-W-33-New-90	Window	1--1st-New-ExtWall-90 (- specify --180)	4.1	9.4	1	38.8	0.35	0.20	Insect Screen (default)
1-1st-GlDr-D-14-New-90	Window	1--1st-New-ExtWall-90 (- specify --180)	2.7	7.2	1	19.1	0.35	0.20	Insect Screen (default)
2-2nd-Win-W-12-New-0	Window	2--2nd-New-ExtWall-0 (- specify --90)	5.0	11.0	1	55.0	0.35	0.20	Insect Screen (default)
2-2nd-Win-W-13-New-0	Window	2--2nd-New-ExtWall-0 (- specify --90)	5.0	11.0	1	55.0	0.35	0.20	Insect Screen (default)
2-2nd-Win-W-14-New-0	Window	2--2nd-New-ExtWall-0 (- specify --90)	5.0	11.0	1	55.0	0.35	0.20	Insect Screen (default)
2-2nd-Win-W-15-New-0	Window	2--2nd-New-ExtWall-0 (- specify --90)	5.0	11.0	1	55.0	0.35	0.20	Insect Screen (default)
2-2nd-Win-W-16-New-0	Window	2--2nd-New-ExtWall-0 (- specify --90)	5.0	11.0	1	55.0	0.35	0.20	Insect Screen (default)
2-2nd-Win-W-17-New-0	Window	2--2nd-New-ExtWall-0 (- specify --90)	5.0	11.0	1	55.0	0.35	0.20	Insect Screen (default)
2-2nd-Win-W-18-New-0	Window	2--2nd-New-ExtWall-0 (- specify --90)	5.0	11.0	1	55.0	0.35	0.20	Insect Screen (default)
2-2nd-GlDr-D-06-New-0	Window	2--2nd-New-ExtWall-0 (- specify --90)	2.3	11.0	1	24.8	0.35	0.20	Insect Screen (default)
2-2nd-GlDr-D-07-New-0	Window	2--2nd-New-ExtWall-0 (- specify --90)	2.3	11.0	1	24.8	0.35	0.20	Insect Screen (default)
2-2nd-GlDr-D-03-New-90	Window	2--2nd-New-ExtWall-90 (- specify --180)	6.0	11.0	1	66.0	0.35	0.20	Insect Screen (default)
2-2nd-GlDr-D-05-New-90	Window	2--2nd-New-ExtWall-90 (- specify --180)	6.0	11.0	1	66.0	0.35	0.20	Insect Screen (default)
2-2nd-GlDr-D-05-New-90 2	Window	2--2nd-New-ExtWall-90 (- specify --180)	2.3	11.0	1	24.8	0.35	0.20	Insect Screen (default)
2-2nd-Win-W-04-New-180	Window	2--2nd-New-ExtWall-180 (- specify --270)	5.0	11.0	1	55.0	0.35	0.20	Insect Screen (default)
2-2nd-Win-W-05-New-180	Window	2--2nd-New-ExtWall-180 (- specify --270)	5.0	11.0	1	55.0	0.35	0.20	Insect Screen (default)
2-2nd-Win-W-06-New-180	Window	2--2nd-New-ExtWall-180 (- specify --270)	5.0	11.0	1	55.0	0.35	0.20	Insect Screen (default)
2-2nd-Win-W-07-New-180	Window	2--2nd-New-ExtWall-180 (- specify --270)	5.0	11.0	1	55.0	0.35	0.20	Insect Screen (default)
2-2nd-GlDr-D-02-New-180	Window	2--2nd-New-ExtWall-180 (- specify --270)	11.3	11.0	1	123.8	0.35	0.20	Insect Screen (default)
2-2nd-Win-W-08-New-180	Window	2--2nd-New-ExtWall-180 (- specify --270)	5.0	11.0	1	55.0	0.35	0.20	Insect Screen (default)
2-2nd-Win-W-09-New-180	Window	2--2nd-New-ExtWall-180 (- specify --270)	5.0	11.0	1	55.0	0.35	0.20	Insect Screen (default)
2-2nd-Win-W-10-New-180	Window	2--2nd-New-ExtWall-180 (- specify --270)	5.0	11.0	1	55.0	0.35	0.20	Insect Screen (default)

Registration Number: 218-P010658846A-000-000-0000000-0000 — Registration Date/Time: 2018-07-11 10:39:52 — HERS Provider: CalCERTS inc.
CA Building Energy Efficiency Standards - 2016 Residential Compliance — Report Version - CF1R-02052018-1016 SP2 — Report Generated at: 2018-02-16 13:12:41

CERTIFICATE OF COMPLIANCE - RESIDENTIAL PERFORMANCE COMPLIANCE METHOD — CF1R-PRF-01
Project Name: Pangan Residence — **Calculation Date/Time:** 13:11, Fri, Feb 16, 2018 — **Page 2 of 13**
Calculation Description: v1 — **Input File Name:** T24_Pangan_MH_v0.ribd16

REQUIRED SPECIAL FEATURES

The following are features that must be installed as condition for meeting the modeled energy performance for this computer analysis.

- **PV System: 2.2 kWdc**
- **Floor has high level of insulation**
- **Window overhangs and/or fins**
- **Exposed slab floor in conditioned zone**
- **Non-standard duct location (any location other than attic)**
- **Solar water heating credit, single family building Special feature and additional documentation**

HERS FEATURE SUMMARY

The following is a summary of the features that must be field-verified by a certified HERS Rater as a condition for meeting the modeled energy performance for this computer analysis. Additional detail is provided in the building components tables below.

Building-level Verifications:
- **IAQ mechanical ventilation**

Cooling System Verifications:
- **Minimum Airflow**
- **Verified SEER**
- **Fan Efficacy Watts/CFM**

HVAC Distribution System Verifications:
- **Duct Sealing**
- **- select distribution system type -**

Domestic Hot Water System Verifications:
- **-- None --**

BUILDING - FEATURES INFORMATION

01	02	03	04	05	06	07
Project Name	Conditioned Floor Area (ft²)	Number of Dwelling Units	Number of Bedrooms	Number of Zones	Number of Ventilation Cooling Systems	Number of Water Heating Systems
Pangan Residence	2594	1	3	3	0	1

ZONE INFORMATION

01	02	03	04	05	06	07
Zone Name	Zone Type	HVAC System Name	Zone Floor Area (ft²)	Avg. Ceiling Height	Water Heating System 1	Water Heating System 2
1st	Conditioned	HVAC System 2	838	10.5	DHW System NEW	n/a
2nd-Living	Conditioned	HVAC System 2	1027	10.5	DHW System NEW	n/a
2nd-Master	Conditioned	HVAC System 1	729	10.5	DHW System NEW	n/a

Registration Number: 218-P010658846A-000-000-0000000-0000 — Registration Date/Time: 2018-07-11 10:39:52 — HERS Provider: CalCERTS inc.
CA Building Energy Efficiency Standards - 2016 Residential Compliance — Report Version - CF1R-02052018-1016 SP2 — Report Generated at: 2018-02-16 13:12:41

CERTIFICATE OF COMPLIANCE - RESIDENTIAL PERFORMANCE COMPLIANCE METHOD — CF1R-PRF-01
Project Name: Pangan Residence — **Calculation Date/Time:** 13:11, Fri, Feb 16, 2018 — **Page 9 of 13**
Calculation Description: v1 — **Input File Name:** T24_Pangan_MH_v0.ribd16

OPAQUE SURFACE CONSTRUCTIONS

01	02	03	04	05	06	07
Construction Name	Surface Type	Construction Type	Framing	Total Cavity R-value	Winter Design U-factor	Assembly Layers
ExtWall	Exterior Walls	Wood Framed Wall	2x6 @ 16 in. O.C.	R 25	0.060	• *Inside Finish: Gypsum Board* • *Cavity / Frame: R-25 / 2x6* • *Sheathing / Insulation: Wood Siding/sheathing/decking* • *Exterior Finish: 3 Coat Stucco*
Cathedral Assembly	Cathedral Ceilings	Wood Framed Ceiling	2x10 @ 16 in. O.C.	R 38	0.020	• *Inside Finish: Gypsum Board* • *Cavity / Frame: R-38 / 2x10* • *Roof Deck: Wood Siding/sheathing/decking* • *Above Deck Insulation: R15 Sheathing* • *Roofing: Light Roof (Asphalt Shingle)*
IntWall	Interior Walls	Wood Framed Wall	2x6 @ 16 in. O.C.	R 19	0.062	• *Inside Finish: Gypsum Board* • *Sheathing / Insulation: Gypsum Board* • *Cavity / Frame: R-19 / 2x6* • *Sheathing / Insulation: Gypsum Board* • *Other Side Finish: Gypsum Board*
IntFlr	Interior Floors	Wood Framed Floor	2x10 @ 16 in. O.C.	R 30	0.034	• *Floor Surface: Hardwood* • *Concrete Fill: Concrete fill* • *Floor Deck: Wood Siding/sheathing/decking* • *Cavity / Frame: R-30 / 2x10* • *Sheathing / Insulation: Gypsum Board* • *Ceiling Below Finish: Gypsum Board*
Un.Wall 10in_R13	Underground Walls	Concrete / ICF / Brick			0.089	• *Inside Finish: Gypsum Board* • *Insulation/Furring: R-10 / no furring* • *Mass Layer: 10 in. Concrete*
Ext Floor R30	Exterior Floors	Wood Framed Floor	2x10 @ 16 in. O.C.	R 30	0.035	• *Floor Surface: Hardwood* • *Concrete Fill: Concrete fill* • *Floor Deck: Wood Siding/sheathing/decking* • *Cavity / Frame: R-30 / 2x10* • *Sheathing / Insulation: Wood Siding/sheathing/decking* • *Exterior Finish: 3 Coat Stucco*
ExtWall Concrete	Exterior Walls	Concrete / ICF / Brick			0.081	• *Inside Finish: Gypsum Board* • *Insulation/Furring: R-10 / no furring* • *Mass Layer: 10 in. Concrete* • *Exterior Finish: 3 Coat Stucco*
IntFlr Garage	Interior Floors	Wood Framed Floor	2x10 @ 16 in. O.C.	R 19	0.048	• *Floor Surface: Hardwood* • *Concrete Fill: Concrete fill* • *Floor Deck: Wood Siding/sheathing/decking* • *Cavity / Frame: R-19 / 2x10* • *Ceiling Below Finish: Gypsum Board*

Registration Number: 218-P010658846A-000-000-0000000-0000 — Registration Date/Time: 2018-07-11 10:39:52 — HERS Provider: CalCERTS inc.
CA Building Energy Efficiency Standards - 2016 Residential Compliance — Report Version - CF1R-02052018-1016 SP2 — Report Generated at: 2018-02-16 13:12:41

CERTIFICATE OF COMPLIANCE - RESIDENTIAL PERFORMANCE COMPLIANCE METHOD — CF1R-PRF-01
Project Name: Pangan Residence — **Calculation Date/Time:** 13:11, Fri, Feb 16, 2018 — **Page 6 of 13**
Calculation Description: v1 — **Input File Name:** T24_Pangan_MH_v0.ribd16

2-2nd-Win-W-11-New-180	Window	2--2nd-New-ExtWall-180 (- specify --270)	5.0	11.0	1	55.0	0.35	0.20	Insect Screen (default)
2-2nd-Win-W-21-New-270	Window	2--2nd-New-ExtWall-270 (- specify --0)	1.8	11.0	1	19.9	0.35	0.20	Insect Screen (default)
2-2nd-Win-W-01-New-270	Window	2--2nd-New-ExtWall-270 (- specify --0)	4.0	11.0	1	43.5	0.35	0.20	Insect Screen (default)
2-2nd-Win-W-02-New-270	Window	2--2nd-New-ExtWall-270 (- specify --0)	4.0	11.0	1	43.5	0.35	0.20	Insect Screen (default)
2-2nd-Win-W-03-New-270	Window	2--2nd-New-ExtWall-270 (- specify --0)	4.0	11.0	1	43.5	0.35	0.20	Insect Screen (default)
2-2nd-GlDr-D-01-New-270	Window	2--2nd-New-ExtWall-270 (- specify --0)	3.0	11.0	1	33.0	0.35	0.20	Insect Screen (default)
Skylight 1	Skylight	2-2-roof-New-0_12 (- specify --90)			1	34.0	0.50	0.20	
2-2nd-GlDr-D-08-New-0-2	Window	2--2nd-New-ExtWall-0-2 (- specify --90)	9.7	11.0	1	106.3	0.35	0.20	Insect Screen (default)
2-2nd-Win-W-29-New-0-2	Window	2--2nd-New-ExtWall-0-2 (- specify --90)	2.0	11.0	1	22.0	0.35	0.20	Insect Screen (default)
2-2nd-Win-W-28-New-0-2	Window	2--2nd-New-ExtWall-0-2 (- specify --90)	8.8	11.0	1	96.3	0.35	0.20	Insect Screen (default)
2-2nd-Win-W-27-New-0-2	Window	2--2nd-New-ExtWall-0-2 (- specify --90)	5.0	11.0	1	55.0	0.35	0.20	Insect Screen (default)
2-2nd-Win-W-26-New-0-2	Window	2--2nd-New-ExtWall-0-2 (- specify --90)	5.0	11.0	1	55.0	0.35	0.20	Insect Screen (default)
2-2nd-Win-W-25-New-0-2	Window	2--2nd-New-ExtWall-0-2 (- specify --90)	5.0	11.0	1	55.0	0.35	0.20	Insect Screen (default)
2-2nd-Win-W-19-New-90-2	Window	2--2nd-New-ExtWall-90-2 (- specify --180)	1.8	11.0	1	19.9	0.35	0.20	Insect Screen (default)
2-2nd-Win-W-24-New-180-2	Window	2--2nd-New-ExtWall-180-2 (- specify --270)	5.0	11.0	1	55.0	0.35	0.20	Insect Screen (default)
2-2nd-Win-W-23-New-180-2	Window	2--2nd-New-ExtWall-180-2 (- specify --270)	5.0	11.0	1	55.0	0.35	0.20	Insect Screen (default)
2-2nd-Win-W-22-New-180-2	Window	2--2nd-New-ExtWall-180-2 (- specify --270)	5.0	11.0	1	55.0	0.35	0.20	Insect Screen (default)
2-2nd-Win-W-20-New-180-2	Window	2--2nd-New-ExtWall-180-2 (- specify --270)	8.1	11.0	1	88.9	0.35	0.20	Insect Screen (default)
2-2nd-GlDr-D-09-New-180-2	Window	2--2nd-New-ExtWall-180-2 (- specify --270)	9.5	11.0	1	104.5	0.35	0.20	Insect Screen (default)
2-2nd-Win-W-21-New-270-2	Window	2--2nd-New-ExtWall-270-2 (- specify --0)	1.8	11.0	1	19.9	0.35	0.20	Insect Screen (default)
2-2nd-GlDr-D-10-New-270-2	Window	2--2nd-New-ExtWall-270-2 (- specify --0)	6.0	11.0	1	66.0	0.35	0.20	Insect Screen (default)
2-2nd-GlDr-D-11-New-270-2	Window	2--2nd-New-ExtWall-270-2 (- specify --0)	6.0	11.0	1	66.0	0.35	0.20	Insect Screen (default)
Garage Door	Window	1--garage-New-Garage ExtWall-0 (- specify --90)	6.0	8.0	1	48.0	1.00	0.90	Insect Screen (default)
Garage Door-2	Window	1--garage-New-Garage ExtWall-0 (- specify --90)	6.0	8.0	1	48.0	1.00	0.90	Insect Screen (default)
Garage Door-3	Window	1--garage-New-Garage ExtWall-0 (- specify --90)	6.0	8.0	1	48.0	1.00	0.90	Insect Screen (default)

Registration Number: 218-P010658846A-000-000-0000000-0000 — Registration Date/Time: 2018-07-11 10:39:52 — HERS Provider: CalCERTS inc.
CA Building Energy Efficiency Standards - 2016 Residential Compliance — Report Version - CF1R-02052018-1016 SP2 — Report Generated at: 2018-02-16 13:12:41

CERTIFICATE OF COMPLIANCE - RESIDENTIAL PERFORMANCE COMPLIANCE METHOD — CF1R-PRF-01
Project Name: Pangan Residence — **Calculation Date/Time:** 13:11, Fri, Feb 16, 2018 — **Page 3 of 13**
Calculation Description: v1 — **Input File Name:** T24_Pangan_MH_v0.ribd16

OPAQUE SURFACES

01	02	03	04	05	06	07	08
Name	Zone	Construction	Azimuth	Orientation	Gross Area (ft²)	Window & Door Area (ft²)	Tilt (deg)
1--1st-New-ExtWall concrete-0	1st	ExtWall Concrete	90	- specify -	371.2	152.292	90
1--1st-New-ExtWall concrete-180	1st	ExtWall Concrete	270	- specify -	198.6	0	90
1--1st-New-ExtWall-0	1st	ExtWall	90	- specify -	183.3	40.6112	90
1--1st-New-ExtWall-90	1st	ExtWall	180	- specify -	230	174.486	90
1--1st-New-ExtWall-270	1st	ExtWall	0	- specify -	35.4	0	90
1--1st-10-IntWall-New	1st	IntWall	n/a	n/a	71.4	0	n/a
1st--Underground Wall-New	1st	Un.Wall 10in_R13	n/a	n/a	494.4	n/a	n/a
2--2nd-New-ExtWall-0	2nd-Living	ExtWall

FILE PATH: /Users/moderndesigncol/Dropbox/000 ARCHICAD FILES/Pangan ArchiCAD/PANGEN_BUILDING_Comments2_10062020.pln • LAST SAVED BY: Modern House - Natsumi • PRINTED ON 4/27/21 @ 3:29 PM
PROJECT COMPANY* • PANGAN RESIDENCE • *** PROJECT NUMBER *** • T-2

HVAC FAN SYSTEMS - HERS VERIFICATION

01	02	03
Name	Verified Fan Watt Draw	Required Fan Efficiency (Watts/CFM)
HVAC Fan System 1-hers-fan	Required	0.58

IAQ (Indoor Air Quality) FANS

01	02	03	04	05	06
Dwelling Unit	IAQ CFM	IAQ Watts/CFM	IAQ Fan Type	IAQ Recovery Effectiveness(%)	HERS Verification
SFam IAQVentRpt 1-1	160	0.25	Balanced	92	Required

CalCERTS, Inc. HERS PROVIDER

DOCUMENTATION AUTHOR'S DECLARATION STATEMENT

1. I certify that this Certificate of Compliance documentation is accurate and complete.

Documentation Author Name: Lucas Morton	Documentation Author Signature:
Company: Morton Green Building Services	Signature Date: 2018-03-06 18:04:10
Address: 826 Orange Ave.	CEA/HERS Certification Identification (If applicable): R16-15-20067
City/State/Zip: Coronado, CA 92118	Phone: 619-721-3180

RESPONSIBLE PERSON'S DECLARATION STATEMENT

I certify the following under penalty of perjury, under the laws of the State of California:
1. I am eligible under Division 3 of the Business and Professions Code to accept responsibility for the building design identified on this Certificate of Compliance.
2. I certify that the energy features and performance specifications identified on this Certificate of Compliance conform to the requirements of Title 24, Part 1 and Part 6 of the California Code of Regulations.
3. The building design features or system design features identified on this Certificate of Compliance are consistent with the information provided on other applicable compliance documents, worksheets, calculations, plans and specifications submitted to the enforcement agency for approval with this building permit application.

Responsible Designer Name: Curt Cline	Responsible Designer Signature:
Company: Modern House	Date Signed: 2018-07-11 10:39:52
Address: 1265 Indiana Street	License: --
City/State/Zip: San Francisco, CA 94107	Phone: 415-596-7281

Digitally signed by CalCERTS. This digital signature is provided in order to secure the content of this registered document, and in no way implies Registration Provider responsibility for the accuracy of the information.

Easy to Verify at CalCERTS.com

CalCERTS, Inc. HERS PROVIDER

SLAB FLOORS

01	02	03	04	05	06	07
Name	Zone	Area (ft²)	Perimeter (ft)	Edge Insul. R-value & Depth	Carpeted Fraction	Heated
1-1-1st-slab-New	1st	838	78	None	0	No
10-1-garage-slab-New	Garage 1	573	30	None	0.8	No

BUILDING ENVELOPE - HERS VERIFICATION

01	02	03	04
Quality Insulation Installation (QII)	Quality Installation of Spray Foam Insulation	Building Envelope Air Leakage	CFM50
Not Required	Not Required	Not Required	n/a

WATER HEATING SYSTEMS

01	02	03	04	05	06
Name	System Type	Distribution Type	Water Heater	Number of Heaters	Solar Fraction (%)
DHW System NEW	Combined Hydronic	Standard	Combi System (1)	1	70.0%

WATER HEATERS

01	02	03	04	05	06	07	08	09	10	11	12
Name	Heater Element Type	Tank Type	Number of Units	Tank Volume (gal)	Uniform Energy Factor / Energy Factor / Efficiency	Input Rating / Pilot / Thermal Efficiency	Tank Insulation R-value (Int/Ext)	Standby Loss / Recovery Eff	First Hour Rating / Flow Rate	NEEA Heat Pump Brand / Model / Other	Tank Location or Ambient Condition
Combi System	Gas	Indirect	1	119	0.96	130,000 Btu/hr	R-12/R-0	n/a	n/a	n/a	n/a

SPACE CONDITIONING SYSTEMS

01	02	03	04	05	06
SC Sys Name	System Type	Heating Unit Name	Cooling Unit Name	Fan Name	Distribution Name
HVAC System 1	Other Heating and Cooling System	Heating System: Combi Boiler	Cooling System: Ducted	HVAC Fan System 1	Ducts: Garage
HVAC System 2	Other Heating and Cooling System	Heating System: Combi Boiler	Cooling System: Ducted	HVAC Fan System 1	Ducts: ConditionedSpace/New

HVAC - HEATING UNIT TYPES

01	02	03	04
Name	System Type	Number of Units	Efficiency
Heating System: Combi Boiler	CombiHydro	2	96 AFUE

CalCERTS, Inc. HERS PROVIDER

HVAC - COOLING UNIT TYPES

01	02	03	04	05	06	07	08
Name	System Type	Number of Units	Efficiency EER	Efficiency SEER	Zonally Controlled	Compressor Type	HERS Verification
Cooling System: Ducted	SplitAirCond	1	13	16	Not Zonal	Single Speed	Cooling System: Ducted -hers-cool
Cooling System: Ducted	SplitAirCond	1	13	16	Not Zonal	Single Speed	Cooling System: Ducted -hers-cool

HVAC COOLING - HERS VERIFICATION

01	02	03	04	05	06
Name	Verified Airflow	Airflow Target	Verified EER	Verified SEER	Verified Refrigerant Charge
Cooling System: Ducted -hers-cool	Required	350	Not Required	Required	Not Required

HVAC - DISTRIBUTION SYSTEMS

01	02	03	04	05	06	07
Name	Type	Duct Leakage	Insulation R-value	Duct Location	Bypass Duct	HERS Verification
Ducts: Garage	DuctsGarage	Sealed and tested	8	Garage	None	Ducts: Garage-hers-dist
Ducts: ConditionedSpace/New	DuctsInEx12	Sealed and tested	8	Conditioned zone (exkept < 12')	None	Ducts: ConditionedSpace/New-hers-dist

HVAC DISTRIBUTION - HERS VERIFICATION

01	02	03	04	05	06	07	08
Name	Duct Leakage Verification	Duct Leakage Target (%)	Verified Duct Location	Verified Duct Design	Buried Ducts	Deeply Buried Ducts	Low-leakage Air Handler
Ducts: Garage-hers-dist	Required	5.0	Not Required	Not Required	Not Required	Not Required	n/a
Ducts: ConditionedSpace/New-hers-dist	Required	5.0	Required	Not Required	Not Required	Not Required	n/a

HVAC - FAN SYSTEMS

01	02	03	04
Name	Type	Fan Power (Watts/CFM)	HERS Verification
HVAC Fan System 1	Single Speed PSC Furnace Fan	0.58	HVAC Fan System 1-hers-fan

CalCERTS, Inc. HERS PROVIDER

THESE DRAWINGS ARE THE ORIGINAL UNPUBLISHED WORK OF THE ARCHITECT AND MAY NOT BE USED OR DISCLOSED WITHOUT THE WRITTEN PERMISSION OF THE ARCHITECT.
©MODERN HOUSE

MODERN HOUSE
ARCHITECTURE & DESIGN
1265 Indiana Street
San Francisco Ca. 94107
P. 415.800.8520
C. 415.596.7281
modernhouse@mac.com
www.modernhousearchitects.com

LICENSED ARCHITECT — CURTIS C. CLINE — C26383 — 6.30.21 RENEWAL DATE — STATE OF CALIFORNIA

Curt Cline Architect

BUILDING PERMIT REVIEW

029-35-005

PANGAN RESIDENCE

AUGUSTA CT
MILPITAS, CA

Revisions:

TITLE 24 REPORT

SCALE : AS NOTED

DATE : 07.26.2018

SHEET : T-2

GENERAL REQUIREMENTS

DISCLAIMER: This document contains confidential and proprietary information that cannot be reproduced or divulged, in whole or in part, without written authorization from SFA Design Group, LLC.

GOVERNING CODE: The "California Building Code", 2016 Edition, as adopted and modified by the Santa Clara County shall govern design and construction.

REFERENCE STANDARDS: Reference to ASTM and other standards incorporate these standards into the contract as though included in their entirety. Reference to a specific Section does not relieve the contractor from compliance with the entire standard. The latest edition of the standard shall be used unless a specific date is indicated.

DEFINITIONS: The following definitions cover the meanings of certain terms used in these notes:

- "Architect/Engineer" – The Architect and the Engineer–of–Record.
- "Prepared by a Specialty Structural Engineer" – Prepared by or under the direct supervision of a Specialty Structural Engineer (SSE) with a structural license issued by the State of California. Submittals shall be stamped and signed by the SSE.
- "Submit for review" – Submit to the Architect/Engineer for review prior to fabrication or construction.

NOTE PRIORITIES: Notes on the individual drawings govern over notes on this sheet.

SPECIFICATIONS: Refer to the specifications for information in addition to that contained in these notes and the structural drawings.

STRUCTURAL DETAILS: The structural drawings are intended to show the general character and extent of the project. They are not intended to show all details of the work. Details noted "typical" apply to similar work throughout the project unless noted separately.

ARCHITECTURAL DRAWINGS: Refer to the architectural drawings for information including, but not limited, to: dimensions, elevations, slopes, door and window openings, non–bearing walls, curtain walls, stairs, elevators, curbs, drains, depressions, railings, waterproofing, finishes and other nonstructural items.

STRUCTURAL RESPONSIBILITIES: The structural engineer is responsible for the strength and stability of the primary structure in its completed form.

CONTRACTOR RESPONSIBILITIES: The contractor is responsible for the means and methods of construction and all job related safety standards (i.e. OSHA). The contractor is responsible for the strength and stability of the structure during construction. the contractor shall provide temporary shoring, bracing and other elements required to maintain stability until the structure is complete. It is the contractor's responsibility to be familiar with the work required in the construction documents and the requirements for executing it properly. The contractor shall at his discretion employ an California State registered structural engineer for design of temporary bracing and shoring. It is the contractor's responsibility to contact the Engineer–of–Record to schedule applicable Structural Observations.

DISCREPANCIES: In case of discrepancies between the specifications, reference standards and the governing code, the Architect/Engineer will determine which shall govern. Discrepancies shall be brought to the attention of the Architect/Engineer before proceeding with the work.

SITE VERIFICATION: The contractor shall verify all dimensions and conditions at the site. Conflicts between the drawings and actual site conditions shall be brought to the attention of the Architect/Engineer before proceeding with the work.

CONSTRUCTION LOADS: Loads on the structure during construction shall not exceed the design loads as noted in DESIGN REQUIREMENTS below or the capacity of partially completed construction.

ALTERNATES: Alternates for specified items may be submitted to the Architect/Engineer for review.

SUBMITTALS

SUBMITTALS: Submittals for shop drawings, mill tests, product data, etc. for items designed by the Engineer–of–Record or a Specialty Structural Engineer (SSE) shall be made available to the Architect/Engineer prior to construction. The contractor shall review the submittal before forwarding to the Architect. Submittals shall be made in time to provide a two week review period for the Architect/Engineer. Submittals required for each Section of these notes are specified in that Section

DESIGN/FABRICATION BY OTHERS:

LOADS: All pre–engineered, prefabricated, manufactured, or other products by others shall be designed for the tributary dead and live loads plus wind and earthquake loads when applicable. Total design dead loads are shown below. See DESIGN REQUIREMENTS for transient loading. Design shall conform to the specifications, reference standards and governing code.

Roof Dead Load	12 PSF
Floor Dead Load	15 PSF
Total Deflection Limit	See DESIGN REQUIREMENTS
Live Load Deflection Limit	See DESIGN REQUIREMENTS

SHOP DRAWING SUBMITTALS: Items fabricated off–site require shop drawings to be submitted for approval prior to fabrication and shall include all information necessary for fabrication and installation. Items indicated on the shop drawings shall meet or exceed in strength and size of those specified on these structural drawings. These items include, but are not limited to:

Engineered Wood Products
Solid Web Wood Joists
Steel Stairs
Steel Members and Connections

SHOP DRAWING SUBMITTAL REVIEW: Review by the Architect/Engineer is for general compliance with the design concept and the contract documents. Markings or comments shall not be construed as relieving the contractor from compliance with the project plans and specifications, nor departures there from. The contractor remains responsible for details and accuracy; for confirming and correlating all quantities and dimensions; for selecting fabrication processes; for techniques of assembly; and for performing work in a secure manner. When shop drawings differ from or add to the requirements of the structural drawings, they shall be designed and stamped by a Specialty Structural Engineer (SSE).

INSPECTION SUBMITTALS: The special inspector shall submit copies of all special inspection reports to the Architect/Engineer for review.

STRUCTURAL OBSERVATION: The owner shall employ the engineer responsible for the structural design on a time and materials basis (unless an alternate basis has been agreed upon) to perform a visual observation of the structural system for general conformance to the approved construction documents. The contractor shall coordinate with the Architect/Engineer to schedule for Structural Observation prior to structural concrete being poured (excluding slabs–on–grade), at significant construction stages, and at completion of the structural system prior to finishes being applied.

DESIGN REQUIREMENTS

DESIGN LIVE LOADS:

Residential	40 PSF
Residential Decks & Balconies	60 PSF
Stairs & Landings	40 PSF (1)

(1) Stair treads designed for 300# concentrated load placed to produce maximum stress.

WIND DESIGN: 2016 CBC Wind Speed of 110 mph (3–Second Gust), Exposure C
Design Base Shear: 36,340 Lbs (E–W), 118,090 Lbs (N–S)

SEISMIC DESIGN: Seismic Design Category E, Soil Site Class B, I = 1.0, R = 5.0, Ss = 234.6, S1 = 97.5, Cs = 0.313
1 Basic Seismic Force Resisting System: Light–framed walls sheathed with wood structural panels rated for shear resistance
Design Base Shear: 93,292 Lbs
Analysis Procedure Used: Equivalent Lateral Force

DEFLECTIONS:

Total Load Deflection Limit	L/240
Live Load Deflection Limit	L/360
Operable Partition Support Members	L/600 or ¼" (whichever is less)

SOILS AND FOUNDATIONS

REFERENCE STANDARDS: Conform to IBC Chapter 18 "Soils & Foundations."

SOILS REPORT: Recommendations contained in Geotechnical Engineering Study – Proposed Single Family Residence – 1512 Augusta Court, Milpitas, California by Earth Systems Pacific dated April 4, 2014 and email correspondence with Earth Systems dated March 14, 2018 were used for design.

SOILS AND FOUNDATIONS (CONT.)

SOILS INSPECTION: The Soils Engineer or Building Official shall inspect all prepared soil bearing surfaces prior to placement of concrete and reinforcing steel and verify that soils are adequate to support the "Allowable Foundation Pressure" shown below.

DESIGN SOIL VALUES:

Allowable Foundation Pressure	2500 PSF (may be increased by ⅓ for short term loading)
Passive Lateral Pressure	350 PSF/FT
Active Lateral Pressure (unrestrained)	45 PSF/FT
Coefficient of Sliding Friction	0.30

Assumed values shall be field verified by the Building Official or the Soils Engineer prior to placing concrete.

FOOTING DEPTH: Exterior perimeter footings shall bear not less than 18" below finish grade, or by the geotechnical engineer and the building official. Interior footings shall bear not less than 12" below finish floor.

CAST-IN-PLACE CONCRETE

REFERENCE STANDARDS: Conform to:

(1) All concrete shall be mixed and placed in accordance with ACI 318–11.
(2) ACI 301–10 "Specifications for Structural Concrete".
(3) IBC Chapter 19 "Concrete".

FIELD REFERENCE: Keep in contractor's field office a copy of ACI Field Reference manual, SP–15(10), "Standard Specifications for Structural Concrete (ACI 301) with Selected ACI and ASTM References".

CONCRETE MIXTURES: Conform to ACI 301 Sec 4 "Concrete Mixtures".

MATERIALS: Conform to ACI 301 Sec 4.2.1 "Materials" for requirements for cementitious materials, aggregates, mixing water and admixtures.

SUBMITTALS: Provide all submittals required by ACI 301 Sec 4.1.2. Submit mix designs for each mix in the table below.

TABLE OF MIX DESIGN REQUIREMENTS

Member Type/Location	Test (psi)	Strength Age (Days)	Max Aggr. (Inch)	Max W/C Ratio	Air Cont. (%)
Foundations	3000	28	1	––	––
Slabs–on–Grade & Sidewalks					
Exterior	3000	28	1	0.45	5
Interior	3000	28	1	0.50	––
Basement Walls	4000	28	1	0.50	––

Mix Design Notes:

(1) W/C Ratio: Water–cementitious material ratios shall be based on the total weight of cementitious materials. Ratios not shown in the table above are controlled by strength requirements.

(2) Cementitious Content:
a) The use of fly ash, other pozzolans, silica fume, or slag shall conform to ACI 301 Sec 4.2.2.8.b.
b) For concrete used in elevated floors, portland cement content shall conform to ACI 301 Sec 4.2.2.1. Acceptance of lower cement content is contingent on providing supporting data to the Architect/Engineer for review and acceptance.

(3) Air Content: Conform to ACI 301 Sec 4.2.2.4. Horizontal exterior surfaces in contact with the soil require entrained air. Use "moderate exposure". Vertical exterior surfaces require "moderate exposure". Tolerance is ±1½%. Air content shall be measured at point of placement.

(4) Slump: Conform to ACI 301 Sec 4.2.2.2. Slump shall be determined at point of placement.

(5) Chloride Content: Conform to ACI 301 Sec 4.2.2.6 and Table 4.2.2.6 for "Other Reinforced Concrete Construction".

FORMWORK: Conform to ACI 301 Sec 2 "Formwork and Formwork Accessories". Removal of Forms shall conform to Sec 2.3.2 except strength indicated in Sec 2.3.2.5 shall be 0.75 f'c.

MEASURING, MIXING, & DELIVERY: Conform to ACI 301 Sec 4.3.

HANDLING, PLACING, CONSTRUCTING & CURING: Conform to ACI 301 Sec 5.

CONSTRUCTION JOINTS: Conform to ACI 301 Secs. 2.2.2.5, 5.1.2.3a, 5.2.2.1 and 5.3.2.6. Joints shall be located and detailed as on the construction drawings. Use of an acceptable adhesive, surface retarder, portland cement grout or roughening the surface is not required unless specifically noted on the drawings.

EMBEDDED ITEMS: Position and secure in place expansion joint material, anchors and other structural and non–structural embedded items before placing in concrete. Contractor shall refer to mechanical, electrical, plumbing, architectural drawings and coordinate for other embedded items.

GROUT: Use 7000 psi non–shrink grout for column base plates.

SHRINKAGE: Concrete slabs will continue to shrink after initial placement of concrete. Contractor and subcontractor shall coordinate jointing and interior material finishes to provide adequate tolerance for expected structural frame shrinkage and shall include, but not be limited to: curtain wall, dryvit, storefront, skylight and ceiling suppliers. Contact Engineer for expected range of shrinkage.

TESTING & ACCEPTANCE:

Testing: Obtain samples and conduct tests in accordance with ACI 301 Sec 1.6.4.2. Additional samples may be required to obtain concrete strengths at alternate intervals than shown below. A "test" for acceptance is the average strength of the 2 cylinders tested at the specified test age.

Mold and cure 3 cylinders for 28 day test age. Test one at 7 days and 2 at 28 days.

Acceptance: Strength is satisfactory if:

(1) The averages of all sets of 3 consecutive tests equal or exceed the specified strength.
(2) No individual test falls below the specified strength by more than 500 psi.

CONCRETE REINFORCEMENT

REFERENCE STANDARDS: Conform to:

(1) ACI 301–10 "Standard Specifications for Structural Concrete", Section 3 "Reinforcement and Reinforcement Supports".
(2) ACI SP–66 "ACI Detailing Manual" including ACI 315–99 "Details and Detailing of Concrete Reinforcement".
(3) CRSI MSP–1 "Manual of Standard Practice".
(4) ANSI/AWS D1.4 "Structural Welding Code – Reinforcing Steel".
(5) IBC Chapter 19, "Concrete".
(6) ACI 318–11 and ACI 318R–11.

SUBMITTALS: Conform to ACI 301 Sec 3.1.1 "Submittals, data and drawings". Submit placing drawings showing fabrication dimensions And locations for placement of reinforcement and reinforcement supports.

MATERIALS:

Reinforcing Bars	ASTM A615, Grade 60, deformed bars.
Bar Supports	CRSI MSP–1, Chapter 3 "Bar Supports".
Tie Wire	16.5 gage or heavier, black annealed.

FABRICATION: Conform to ACI 301, Sec 3.2.2. "Fabrication", and ACI SP–66 "ACI Detailing Manual".

WELDING: Bars shall not be welded unless authorized. When authorized, conform to ACI 301, Sec 3.2.2.2. "Welding" and provide ASTM A706, grade 60 reinforcement.

CONCRETE REINFORCEMENT (CONT.)

PLACING: Conform to ACI 301, Sec 3.3.2 "Placement". Placing tolerances shall conform to IBC Sec 1907.5, "Placing Reinforcement."

CONCRETE COVER: Conform to the following cover requirements from IBC Section 1907.7 and ACI 301, Table 3.3.2.3:

Concrete cast against earth	3"
Concrete exposed to earth or weather (#5 and smaller)	1½"
Ties in columns	1½"
Bars in slabs and walls	¾"

SPLICES: Conform to ACI 301, Sec 3.3.2.7. Refer to "Lap Splice Schedule", for typical splices. Splices shown on individual sheets control over the schedule. Use Class B splices unless noted. Mechanical connections may be used when approved by the Engineer.

FIELD BENDING: Conform to ACI 301 Sec 3.3.2.8. "Field Bending or Straightening". Bar sizes #3 through #5 may be field bent cold the first time in temperatures exceeding 32°F. Other bars require preheating. Do not twist bars.

STRUCTURAL STEEL

REFERENCE STANDARDS: Conform to:

(1) AISC "Steel Construction Manual".
(2) AISC "Seismic Design Manual".
(3) AISC "Code of Standard Practice for Steel Buildings & Bridges".
(4) RCSC "Specification for Structural Joints using ASTM A325 or A490 Bolts".
(5) AWS D1.1 2010 "Structural Welding Code – Steel".

SUBMITTALS: Submit shop drawings in accordance with AISC Specification Section M1 "Shop Drawings". Submit welders' certificates verifying qualification within past 12 months.

MATERIALS: Conform to:

Structural WF Shapes	ASTM	A992–GR50
Other Structural Shapes	ASTM	A36
Bars & Plates	ASTM	A36
Steel Pipe	ASTM	A53, Grade B
Structural Tubing	ASTM	A500, Grade B
Bolts	ASTM	A307
High–Strength Bolts	ASTM	A325N
Anchor Bolts (J–type)	ASTM	F1554 Grade 36
Threaded Rods (In Concrete)	ASTM	F1554 Grade 36
Threaded Rods	ATSM	A36
Welding Electrodes	E70XX	
Epoxy & Expansion Anchors	Hilti or equivalent	
Grout	Embeco or equivalent	

WELDING: Conform to AWS D1.1. Welders shall be certified in accordance with AWS requirements. Use E70 electrodes of type required for materials to be welded.

BOLTING: ASTM A307 bolts shall be installed "snug tight" per AISC, Section RCSC 8(c). ASTM A325 bolts shall conform to the RCSC Specification Section 8(d).

ANCHORS: Expansion and epoxy anchors shall be Hilti or equivalent. Install in accordance with manufacturers instructions. Embedment lengths shall be as shown on drawings.

FABRICATION: Conform to AISC Specification Section M2 "Fabrication" and AISC Code Section 6 "Fabrication and Delivery". Perform work on premises of a fabricator approved by the building official

SHOP PAINTING: Conform to AISC Specification Section M2 and AISC Code Section 6.5 unless a multi–coat system is required per the specifications. Do not prime surfaces to be fireproofed, in contact with concrete, or field welded. Steel work to be concealed by interior building finish or to be in contact with concrete does not require painting. All other steelwork shall be given one coat of shop paint unless a multi–coat system is specified. One coat shop primer is not intended as a primer for a multi–coat system. Refer to the project specifications for primer and top coat requirements. All steel shall be painted per project specifications unless noted otherwise on the drawings or in the specifications.

GALVANIZING: All exposed steel outside the building envelope shall be hot–dipped galvanized. Apply field touch–ups per specifications.

ERECTION: Conform to AISC Specification Section M4 "Erection" and AISC Code Section 7 "Erection". Steel work shall be carried up true and plumb within the limits defined in AISC Code Section 7.11.

BRACING: The contractor shall provide temporary bracing by AISC Specification Section M4.2 "Bracing" and AISC Code Section 7.9 "Temporary Support of Structural Steel Frames".

WOOD FRAMING

REFERENCE STANDARDS: Conform to:

(1) IBC Chapter 23 "Wood".
(2) NDS – 2012 and NDS Supplement – 2012 "National Design Specification for Wood Construction".
(3) SDPWS – 2008 "Special Design Provisions for Wind and Seismic".

SUBMITTALS: Submit shop drawings to the Architect/Engineer for review. Shop drawings shall include member size, spacing, camber, material type, grade, shop and field assembly details and connections, types and location of bolts, welds and other fasteners. Supply shop drawings for the following:

LVL members
Solid web wood joists (SWWJ)

IDENTIFICATION: All sawn lumber and pre–manufactured wood products shall be identified by the grade mark or a certificate of inspection issued by the certifying agency.

MATERIALS:

- Sawn Lumber: Conform to grading rules of WWPA, WCLIB or NLGA.

Member Use	Size	Species	Grade
Light Framing	2x4, 4x4	Doug–Fir Larch	Standard
Joists & Planks	2x6 – 2x12	Doug–Fir Larch	No. 2
Beams & Stringers	4x8 – 6x12	Doug–Fir Larch	No. 2
Posts & Timbers	5x5 – 8x8	Doug–Fir Larch	No. 2

- Wood Structural Panels: Wood structural panels include: all veneer plywood, oriented strand board, waferboard, particleboard, and composites of veneer and wood based material. Conform to IBC Sec 2303.1.4 "Wood Structural Panels" based on Product Standard PS 1–09 and PS 2–10 of the U.S. Dept. of Commerce.

	Minimum APA Rating			
Location	Thickness	Span Rating	Panel Grade	Exposure
Roof	15/32"	32/16	C–D	1
Roof	19/32"	40/20	C–D	1
Floor	1⅜" T&G	48" OC	STURDI–I–FLOOR	1
Floor	23/32" T&G	24" OC	STURDI–I–FLOOR	1
Walls	15/32"	32/16	C–D	1
Walls	7/16" OSB	24/16	C–D	1

Unless noted otherwise on drawings, install panels with long dimension across supports and with panel continuous over two or more spans. End joints shall occur over supports.

- Timber Connectors: Shall be "Strong Tie" by Simpson Company as specified in their latest catalog and shall be called out by letter and number. Alternate connectors by other manufacturers may be substituted provided they have ICBO approval for equivalent or greater load capacities. Connectors shall be installed per the manufacturer's instructions. Where connector straps connect two members, place one–half of the nails or bolts in each member. Provide washers under the heads and nuts of all bolts and lag screws bearing on wood. Unless noted otherwise, all nails shall be common.

THESE DRAWINGS ARE THE ORIGINAL UNPUBLISHED WORK OF MODERN HOUSE AND MAY NOT BE USED OR COPIED WITHOUT THE WRITTEN PERMISSION OF THE ARCHITECT.
© MODERN HOUSE

MODERN HOUSE
ARCHITECTURE & DESIGN
1265 Indiana St.
San Francisco Ca. 94107
P. 415.800.8520
C. 415.596.7281
modernhouse@mac.com
www.modernhousearchitects.com

REGISTERED PROFESSIONAL ENGINEER
JEFFREY S. FITCH
C64889
Exp. 06/30/21
CIVIL
STATE OF CALIFORNIA

Curt Cline Architect

SFA Design Group, LLC
STRUCTURAL | CIVIL | GEOTECHNICAL | LAND USE PLANNING
9020 SW Washington Square Dr., Suite 505
Portland, Oregon 97223
1813 Ruston Dr., Suite C, Livermore, CA 94551
1912 S 146th St., Seattle, WA 98168
p: 503.641.8311 www.sfadg.com

BUILDING PERMIT REVIEW
029-35-005
PANGAN RESIDENCE
AUGUSTA CT
MILPITAS, CA

Revisions:

1	12.21.2018
2	11.24.2020

GENERAL NOTES

PROJECT : 17-079
DATE : 04.25.2018
SHEET : S1.1

WOOD FRAMING (CONT.)

- Wood Fasteners: Conform to IBC Sec 2304.9 "Connections and Fasteners". Unless noted otherwise, all nails shall be common. Nail sizes specified on the drawings are based on the following specifications:

Size	Length	Diameter
6d	2"	0.113"
8d	2½"	0.131"
10d	3"	0.148"
16d	3½"	0.162"

Alternate nails may be used subject to review and approval by the Structural Engineer. Substitution of staples for the nailing of rated sheathing is subject to review by the structural engineer prior to construction. TrueSpec type nails are recommended for ease of identification after installation.

- Lag Bolts/Bolts: Conform to ASTM A307–07b and IBC Sec 2304.9.

The following materials are based on lumber manufactured by Weyerhaeuser Corporation and were used for the design as shown on the plans. Alternate manufacturers may be used subject to review and approval by the Architect and Structural Engineer. Alternate joist hangers and other hardware may be substituted for the items shown provided they have ICBO approval for equivalent or greater load capacities.

- Laminated Veneer Lumber (LVL): Conform to NES Report No. NER–481 or CCMC Report No. 08675–R.
- Solid Web Wood Joists (SWWJ): Conform to NES Report No. NER–200 or the appropriate CCMC report number. Products shall be proven by testing and evaluation in accordance with ASTM D – 5055. Joists shall be designed by the manufacturer for the spans and conditions shown on the plans. Joists shall have wood chords and solid wood webs.

NAILING REQUIREMENTS: Provide minimum nailing in accordance with IBC Table 2304.9.1 "Fastening Schedule" except as noted on the drawings. Nailing for roof/floor diaphragms/shear walls shall be per drawings. Nails shall be driven flush and shall not fracture the surface of sheathing.

STANDARD STUD CONSTRUCTION: Unless noted on the plans, construction shall conform to IBC Sec 2308 "Conventional Light–Frame Construction".

(1) Wall Framing: Unless noted otherwise all interior walls shall be 2x4 at 16" oc or 2x6 at 24" oc. All exterior walls shall be 2x6 at 24" oc. Provide two studs minimum at the end of all walls and at each side of all openings. All interior and exterior wall headers to be (2) 2x8 UNO. Provide solid blocking, through floors, to supports below, at all wood column locations. Attach the lower plates of all stud walls to wood framing below with 16d nails at 12" oc or bolted to concrete with ⅝"ø A307 anchor bolts x 7" embedment with 3" square x 3ga plate washers at 48" oc, two anchor bolts minimum per shearwall. Locate one anchor bolt between 6" and 12" of each end of each sill plate piece. (Epoxy or Expansion anchors are an accepted alternate upon approval of the Structural Engineer.) Nail together individual members of built up posts with two rows of 16d nails at 12" oc staggered. Refer to the plans and shearwall schedule for required sheathing and nailing. Nail sheathing to posts in walls with 8d nails at 12" oc. When not otherwise noted, provide gypsum wallboard on interior surfaces and plywood sheathing on exterior surfaces. Nail gypsum wall board to all studs, posts, top plates, bottom plates and blocking with 5d cooler nails for ½" GWB and 6d cooler nails for ⅝" GWB at 7" oc max. For exterior gypsum sheathing, use 11 gauge, 1¾" long, 7/16" head, galvanized nails.

(2) Roof and Floor Framing: Provide double joists around all openings in roofs and floors. Unless otherwise noted provide double joists under all parallel bearing partitions. Provide solid blocking at all bearing points. Refer to plans and details for attachment of joists and rafters to flush headers and beams. Nail all multi–joists together with two rows of 16d at 12" oc staggered. Where roof or floor framing is spaced greater than 16" oc, align wall studs with framing members.

Unless noted otherwise, plywood roof and floor sheathing shall be laid up with face grain perpendicular to supports and glued/nailed with 8d and 10d nails, respectively, at 6" oc to framed panel edges and 12" oc to intermediate framing supports. Provide plywood edge clips centered between framing at unblocked roof sheathing edges. All floor sheathing shall have tongue and groove joints or be supported by solid blocking. Allow ⅛" spacing at all panel edges and ends of roof and floor sheathing. At blocked roof and floor diaphragms, provide glued/nailing and blocking at all unframed panel edges. Refer to plans for the required glued/nailing and blocking at blocked diaphragms.

MOISTURE CONTENT: Wood material used for this project shall have a maximum moisture content of 19%. Refer to TESTING & INSPECTIONS for the verification of these limits. The maximum moisture content required may be less than 19% if based on a particular cladding/insulation system. Refer to the Architect's drawings and/or project specifications for more restrictive requirements.

PRESERVATIVE TREATMENT: Wood materials required to be "naturally durable or preservative–treated wood" in accordance with IBC Sec 2304.11, "Protection Against Decay and Termites" shall conform to the appropriate standards of the American Wood–Preservers Association (AWPA) for sawn lumber, glued laminated timber, round poles, wood piles and marine piles. Follow American Lumber Standards Committee (ALSC) quality assurance procedures. Products shall bear the appropriate mark. All fasteners driven into pressure treated wood shall be corrosion resistant in accordance with IBC 2304.9.5. It is recommended all wood materials used in exterior unconditioned spaces to be naturally durable or preservative–treated. Where "PT" wood members are indicated but not explicitly required by IBC Sec 2304.11, the owner may opt for non–preservative–treated wood and accepts all risks of decay or termites.

REQUIRED SPECIAL INSPECTIONS

INSPECTIONS: All construction is subject to inspection by the Building Official in accordance with IBC Sec 110. The contractor shall coordinate all required inspections with the Building Official.

SPECIAL INSPECTIONS: In addition to the inspections required by IBC Sec 110, the owner or architect shall employ special inspectors to provide special inspections during construction as summarized in the following tables. The contractor shall provide sufficient notice and access for the special inspector to perform these special inspections.

STRUCTURAL OBSERVATIONS: Refer to "Submittals" Section for additional requirements regarding Structural Observations. Contractor is responsible for coordinating with the structural engineer to schedule applicable observations.

Notes:
1) Items with an "X" shall be inspected in accordance with IBC Chapter 17 by a qualified special inspector.
2) Continuous special inspection means that the special inspector is on site at all times observing the work requiring special inspection. Periodic special inspection means that the special inspector is on site at time intervals necessary to confirm that the work requiring special inspection is in compliance.
3) Any discrepancies found during special inspection shall be brought to the immediate attention of the contractor for correction. If discrepancies are not corrected, notify the building official and Architect/Engineer.

REQUIRED GEOTECHNICAL SPECIAL INSPECTIONS

SYSTEM or MATERIAL	IBC CODE REFERENCE	CODE or STANDARD REFERENCE	INSPECTION FREQUENCY: Continuous	INSPECTION FREQUENCY: Periodic	REMARKS
SOILS					
GEOTECHNICAL INVESTIGATIONS	TABLE 1705.6 1803				GEOTECHNICAL INVESTIGATIONS SHALL INCLUDE ITEMS OF SPECIAL INSPECTION AND TESTING AS NOTED IN REQUIRED TESTING FOR SPECIAL INSPECTION TABLE
VERIFY MATERIALS BELOW SHALLOW FOUNDATIONS ARE ADEQUATE TO ACHIEVE THE DESIGN BEARING CAPACITY	TABLE 1705.6			X (a)	BY THE GEOTECHNICAL ENGINEER
VERIFY EXCAVATIONS ARE EXTENDED TO PROPER DEPTH AND HAVE REACHED PROPER MATERIAL				X	
PERFORM CLASSIFICATION AND TESTING OF COMPACTED FILL MATERIALS	TABLE 1705.6 1803.5.1			X	TESTING OF COMPACTED FILL MATERIALS (SEE REQUIRED TESTING TABLE FOR SPECIAL INSPECTION)
VERIFY USE OF PROPER MATERIALS, DENSITIES AND LIFT THICKNESS DURING PLACEMENT AND COMPACTION OF COMPACTED FILL	TABLE 1705.6		X		BY THE GEOTECHNICAL ENGINEER
PRIOR TO PLACEMENT OF COMPACTED FILL, OBSERVE SUBGRADE AND VERIFY THAT SITE HAS BEEN PREPARED PROPERLY				X	

REQUIRED SPECIAL INSPECTIONS (CONT.)

REQUIRED STRUCTURAL SPECIAL INSPECTIONS

SYSTEM or MATERIAL	IBC CODE REFERENCE	CODE or STANDARD REFERENCE	INSPECTION FREQUENCY: Continuous	INSPECTION FREQUENCY: Periodic	REMARKS
FABRICATORS					
FABRICATORS	1704.2.5			X	SPECIAL INSPECTION IS REQUIRED FOR STRUCTURAL LOAD–BEARING MEMBERS AND ASSEMBLIES FABRICATED ON THE PREMISES OF A FABRICATOR'S SHOP
	1704.2.5.1				THE SPECIAL INSPECTOR SHALL VERIFY THAT THE FABRICATOR MAINTAINS DETAILED FABRICATION AND QUALITY CONTROL PROCEDURES AND SHALL REVIEW FOR COMPLETENESS AND ADEQUACY RELATIVE TO THE CODE REQUIREMENT
	1704.2.5.2				SPECIAL INSPECTIONS REQUIRED BY SECTION 1705 ARE NOT REQUIRED WHERE THE WORK IS DONE ON THE PREMISES OF A FABRICATOR REGISTERED AND APPROVED TO PERFORM SUCH WORK WITHOUT SPECIAL INSPECTION. APPROVAL SHALL BE BASED UPON REVIEW OF THE FABRICATOR'S QUALITY CONTROL MANUALS AND PERIODIC AUDITING OF FABRICATION PRACTICES BY A NATIONALLY RECOGNIZED ACCREDITING AUTHORITY. AT COMPLETION OF FABRICATION, THE APPROVED FABRICATOR SHALL SUBMIT A CERTIFICATE OF COMPLIANCE TO THE BUILDING OFFICIAL STATING THAT THE WORK WAS PERFORMED IN ACCORDANCE WITH THE APPROVED CONSTRUCTION DOCUMENTS
CONCRETE					
INSPECTION OF ANCHORS INSTALLED IN HARDENED CONCRETE	1909.1 TABLE 1705.3	ACI 318: 3.8.6 ACI 318: 8.1.3 ACI 318: 21.1.8		X (a)	SPECIAL INSPECTIONS APPLY TO ANCHOR PRODUCT NAME, TYPE, AND DIMENSIONS, HOLE DIMENSIONS, COMPLIANCE WITH DRILL BIT REQUIREMENTS, CLEANLINESS OF THE HOLE AND ANCHOR, ADHESIVE EXPIRATION DATE, ANCHOR/ADHESIVE INSTALLATION, ANCHOR EMBEDEMENT, AND TIGHTENING TORQUE
REINFORCEMENT STEEL PLACEMENT	1705.3 1910.4 1901.3.2	ACI 318: 3.5 ACI 318: 7.1–7.7		X	TOLERANCES AND REINFORCEMENT PLACEMENT PER ACI 7.5; SPACING LIMITS FOR REINFORCING ACI 7.6 PROTECTION OF REINFORCEMENT PER ACI 7.7
PLACEMENT OF BOLTS INSTALLED IN CONCRETE WHERE ALLOWABLE LOADS HAVE BEEN INCREASED OR WHERE STRENGTH DESIGN IS USED	TABLE 1705.3 1908.5 1909.1	ACI 318: 1.3.2.C ACI 318: 8.1.3 ACI 318: 21.1.8 ACI 318– APPENDIX D		X	ALL BOLTS VISUALLY INSPECTED
VERIFYING USE OF REQUIRED MIX DESIGN(S)	TABLE 1705.3 1904 1904.2 1910.2 1910.3	ACI 318: CHAPTER 4 ACI 318: 5.2–5.4		X	
CONCRETE PLACEMENT	TABLE 1705.3	ACI 318: 1.3.2.D ACI 318: 5.9–5.10	X		
STEEL					

SYSTEM or MATERIAL	IBC CODE REFERENCE	CODE or STANDARD REFERENCE	INSPECTION FREQUENCY: Continuous	INSPECTION FREQUENCY: Periodic	REMARKS
FABRICATION OF STRUCTURAL ELEMENTS	1704.2.5.2	AISC 360 N2		X	REFER TO INSPECTION OF FABRICATOR REQUIREMENTS. APPROVAL BASED ON NATIONALLY RECOGNIZED ACCREDITING AUTHORITY
MATERIAL VERIFICATION OF HIGH–STRENGTH BOLTS, NUTS, AND WASHERS		AISC 360 A3.3 AISC 360 N3.2 ASTM STANDARDS SPECIFIED IN CONSTRUCTION DOCUMENTS RCSC 2.1		X	MANUFACTURER'S CERTIFIED TEST REPORTS
SNUG–TIGHT JOINT HIGH–STRENGTH BOLT INSTALLATION	1705.2.1.1	RCSC SPECIFICATION FOR STRUCTURAL JOINTS USING ASTM A325 OR A490 BOLTS SECTION 9 AISC 360, SECTION M2.5		X	ALL CONNECTIONS INSPECTED AND VERIFIED SNUG
MATERIAL VERIFICATION OF STRUCTURAL STEEL	1705.2.1, 2203.1, TABLE 1705.2	ASTM A6 ASTM STANDARDS SPECIFIED IN CONSTRUCTION DOCUMENTS AISC 360 N3.2 AISC 360 A3.1 AISC 360 M5.5		X	CERTIFIED MILL TEST REPORTS
FOR OTHER STEEL, IDENTIFICATION MARKINGS TO CONFORM TO ASTM STANDARDS SPECIFIED IN THE APPROVED CONSTRUCTION DOCUMENTS	TABLE 1705.2	APPLICABLE ASTM MATERIAL STANDARDS		X	MANUFACTURER'S CERTIFIED TEST REPORTS
MATERIAL VERIFICATION OF WELD FILLER METALS		AISC 360 N3.2 AISC 360 A3.5 APPLICABLE AWS A5 DOCUMENTS		X	MANUFACTURER'S CERTIFICATE OF COMPLIANCE
COMPLETE AND PARTIAL JOINT PENETRATION GROOVE WELDS		AWS D1.1 SECTION 6	X		ALL WELDS VISUALLY INSPECTED PER AWS D1.1.6.9
SINGLE PASS FILLET WELDS LESS THAN OR EQUAL TO 5/16"				X	

REQUIRED SPECIAL INSPECTIONS (CONT.)

MATERIAL VERIFICATION OF REINFORCING STEEL FOR WELDING	TABLE 1705.2 1705.2.2.1.2	ACI 318: 3.5.2 AWS D1.4		X	CERTIFIED MILL TEST REPORTS
WELDING REINFORCING EXCEPT AS NOTED OTHERWISE				X	ALL WELDS VISUALLY INSPECTED PER AWS D1.4.7.5
MATERIAL VERIFICATION OF ANCHOR BOLTS AND THREADED RODS		AISC 360 N3.2 AISC 360 A3.4 ASTM STANDARDS SPECIFIED IN CONSTRUCTION DOCUMENTS		X	MANUFACTURER'S CERTIFIED TEST REPORTS
VERIFYING USE OF PROPER WPS'S		AISC 360 N3.2		X	COPY OF WELDING PROCEDURE SPECIFICATIONS
VERIFYING WELDER AND WELDING INSPECTOR QUALIFICATIONS	1705.2.2.1			X	COPY OF QUALIFICATION CARDS
WELDING STUDS EXCEPT AS NOTED OTHERWISE	1705.2 (2.5)	AISC 360 N6 AWS D1.1 SECTION 7	X		CONTINUOUS INSPECTION IS NOT REQUIRED WHEN WELDS INSTALLED WITH AN AUTOMATICALLY TIMED STUD WELDING MACHINE PER SECTION 7 OF AWS D1.1 (ONLY PERIODIC), 1705.2 (3)
WELDING STUDS IN STRUCTURAL DIAPHRAGMS				X	ALL WELDS VISUALLY INSPECTED PER AWS D1.1.7.8.1
WELDING STAIR AND RAILING SYSTEMS		AWS D1.1 SECTION 6		X	ALL WELDS VISUALLY INSPECTED PER AWS D1.1.6.9
WOOD					
FABRICATION OF PREFABRICATED STRUCTURAL ELEMENTS	1705.5			X	REFER TO INSPECTION OF FABRICATOR REQUIREMENTS

REQUIRED TESTING for SPECIAL INSPECTIONS

SYSTEM or MATERIAL	IBC CODE REFERENCE	CODE or STANDARD REFERENCE	INSPECTION FREQUENCY: Continuous	INSPECTION FREQUENCY: Periodic	REMARKS
GEOTECHNICAL					
GEOTECHNICAL ENGINEER TO PERFORM TESTING OF COMPACTED FILL MATERIALS	1803				TESTING PER GEOTECHNICAL REPORT
FILL IN–PLACE DENSITY OR PREPARED SUBGRADE DENSITY	1705.6			X (a)	BY THE GEOTECHNICAL ENGINEER
MATERIAL VERIFICATION		VARIES; CLASSIFICATION AND TESTING OF CONTROLLED FILL MATERIALS		X (a)	
CONCRETE					
AT THE TIME FRESH CONCRETE IS SAMPLED TO FABRICATE SPECIMENS FOR STRENGTH TESTS, PERFORM SLUMP AND AIR CONTENT TESTS, AND DETERMINE THE TEMPERATURE OF THE CONCRETE	TABLE 1705.3	ASTM C172 ASTM C31 ACI 318: 5.6, 5.8	X		FABRICATE SPECIMENS AT TIME FRESH CONCRETE IS PLACED ONE EACH DAY FOR A GIVEN CLASS OF CONCRETE, OR LESS THAN ONCE FOR EACH 150 YARDS OF CONCRETE, OR LESS THAN ONCE FOR EACH 5000 SQUARE FEET OF SURFACE AREA FOR SLABS/WALLS. ONCE EACH SHIFT FROM IN–PLACE WORK OR FROM TEST PANEL AND MINIMUM ONE SPECIMEN FOR EACH 50 CUBIC YARDS. "PRECONSTRUCTION TESTS AS REQUIRED FOR BUILDING OFFICIAL."
CONCRETE STRENGTH		ASTM C39	X		
CONCRETE SLUMP	TABLE 1705.3	ASTM C143	X		
CONCRETE AIR CONTENT		ASTM C231	X		
CONCRETE TEMPERATURE		ASTM C1064	X		
STEEL					
MAGNETIC PARTICLE (MT) AND ULTRASONIC (UT) TESTING OF WELDS	1705.2.2	MT–AWS D1.1 6.14.4 UT–AWS D1.1 6.13 AND 6.14.3	PER DRAWINGS		

REQUIRED SPECIAL INSPECTIONS for SEISMIC RESISTANCE

SYSTEM or MATERIAL	IBC CODE REFERENCE	CODE or STANDARD REFERENCE	INSPECTION FREQUENCY: Continuous	INSPECTION FREQUENCY: Periodic	REMARKS
WOOD					
CONNECTIONS FOR DIAPHRAGM CHORDS, COLLECTORS, BRACING, AND SHEARWALL ANCHORAGE AND HOLDOWNS	1705.11.2			X	ALL CONNECTIONS VISUALLY INSPECTED
FASTENING OF DIAPHRAGM AND SHEARWALL SHEATHING WITH EDGE NAILING ≤ 4" OC				X	

REQUIRED SPECIAL INSPECTIONS for WIND RESISTANCE

SYSTEM or MATERIAL	IBC CODE REFERENCE	CODE or STANDARD REFERENCE	INSPECTION FREQUENCY: Continuous	INSPECTION FREQUENCY: Periodic	REMARKS
WIND RESISTANCE					
NAILING, BOLTING, ANCHORING, AND OTHER FASTENING OF COMPONENTS WITHIN THE MAIN WIND FORCE–RESISTING SYSTEM, INCLUDING WOOD SHEARWALLS, WOOD DIAPHRAGMS, COLLECTORS (DRAG STRUTS), BRACES, AND HOLDOWNS	1705.10.1			X (a)	SPECIAL INSPECTIONS ARE NOT REQUIRED FOR WOOD SHEARWALLS AND DIAPHRAGMS WHERE THE FASTENER SPACING IS MORE THAN 4" OC OR FOR COLD FORMED CONSTRUCTION WHERE THE SHEATHING IS GYPSUM BOARD, FIBERBOARD, OR WOOD STRUCTURAL PANEL OR STEEL SHEET ON ONE SIDE ONLY AND FASTENER SPACING IS MORE THAN 4" OC

(a) Periodic Special Inspection frequency and timing to be defined by the registered design professional
(b) Selection to be made by the registered design professional based on building category and design methodology

THESE DRAWINGS ARE THE ORIGINAL UNPUBLISHED WORK OF MODERN HOUSE AND MAY NOT BE USED OR REPRODUCED WITHOUT THE WRITTEN PERMISSION OF THE ARCHITECT.
© MODERN HOUSE

MODERN HOUSE
ARCHITECTURE & DESIGN
1265 Indiana St.
San Francisco Ca. 94107
P. 415.800.8520
C. 415.596.7281
modernhouse@mac.com
www.modernhousearchitects.com

REGISTERED PROFESSIONAL ENGINEER — JEFFREY S. FITCH — C64889 — Exp. 06/30/21 — CIVIL — STATE OF CALIFORNIA

Curt Cline Architect

SFA Design Group, LLC
STRUCTURAL | CIVIL | GEOTECHNICAL | LAND USE PLANNING
9020 SW Washington Square Dr., Suite 505
Portland, Oregon 97223
1813 Rutan Dr., Suite C, Livermore, CA 94551
1912 S 146th St., Seattle, WA 98168
p: 503.641.8311 www.sfadg.com

BUILDING PERMIT REVIEW
029-35-005
PANGAN RESIDENCE
AUGUSTA CT
MILPITAS, CA

Revisions:
1 — 12.21.2018
2 — 11.24.2020

GENERAL NOTES

PROJECT : 17-079
DATE : 04.25.2018
SHEET : S1.2

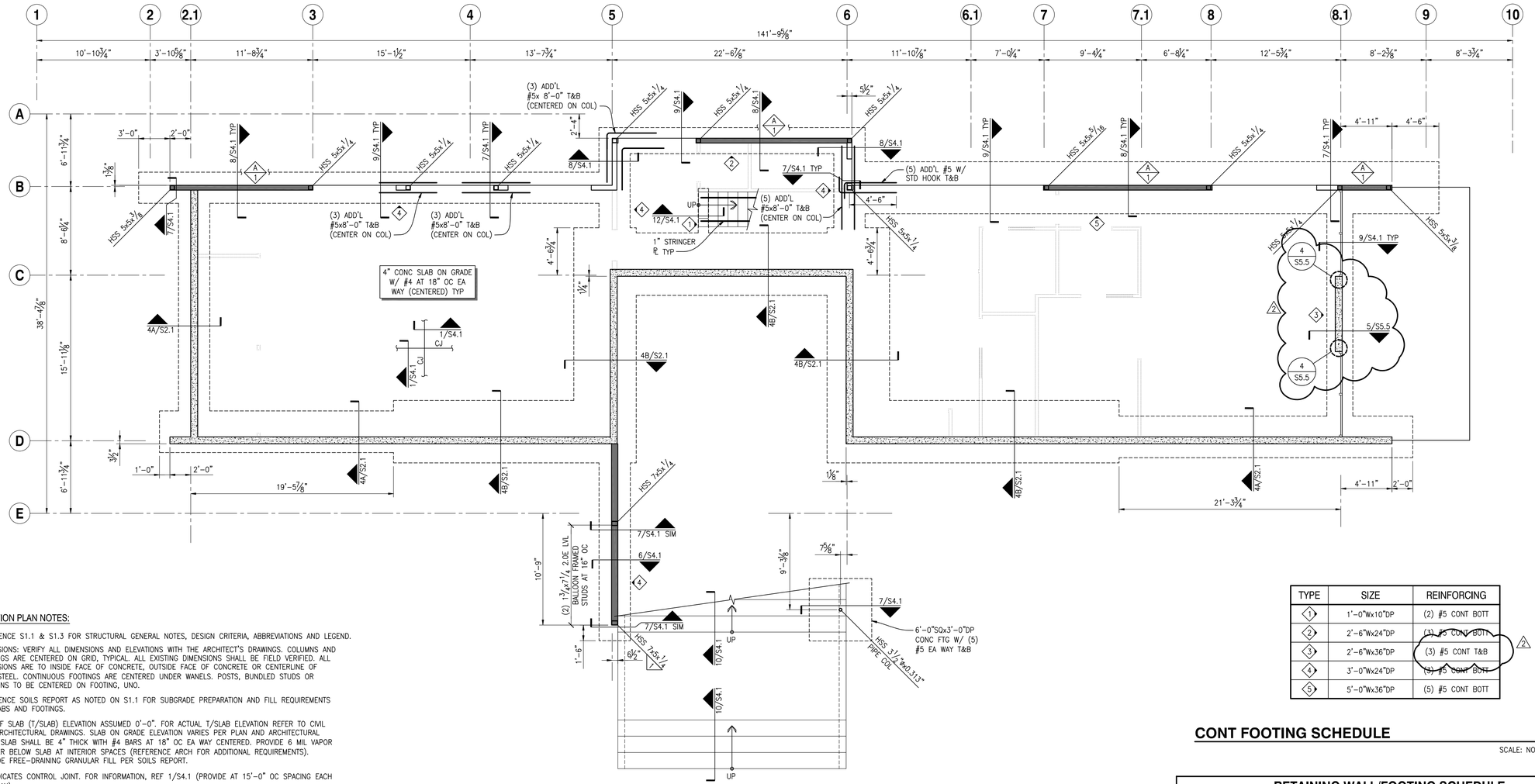

FOUNDATION PLAN

SCALE: 3/16"=1'-0"

FOUNDATION PLAN NOTES:

1. REFERENCE S1.1 & S1.3 FOR STRUCTURAL GENERAL NOTES, DESIGN CRITERIA, ABBREVIATIONS AND LEGEND.
2. DIMENSIONS: VERIFY ALL DIMENSIONS AND ELEVATIONS WITH THE ARCHITECT'S DRAWINGS. COLUMNS AND FOOTINGS ARE CENTERED ON GRID, TYPICAL. ALL EXISTING DIMENSIONS SHALL BE FIELD VERIFIED. ALL DIMENSIONS ARE TO INSIDE FACE OF CONCRETE, OUTSIDE FACE OF CONCRETE OR CENTERLINE OF GRID/STEEL. CONTINUOUS FOOTINGS ARE CENTERED UNDER WANELS. POSTS, BUNDLED STUDS OR COLUMNS TO BE CENTERED ON FOOTING, UNO.
3. REFERENCE SOILS REPORT AS NOTED ON S1.1 FOR SUBGRADE PREPARATION AND FILL REQUIREMENTS AT SLABS AND FOOTINGS.
4. TOP OF SLAB (T/SLAB) ELEVATION ASSUMED 0'-0". FOR ACTUAL T/SLAB ELEVATION REFER TO CIVIL AND ARCHITECTURAL DRAWINGS. SLAB ON GRADE ELEVATION VARIES PER PLAN AND ARCHITECTURAL PLAN. SLAB SHALL BE 4" THICK WITH #4 BARS AT 18" OC EA WAY CENTERED. PROVIDE 6 MIL VAPOR BARRIER BELOW SLAB AT INTERIOR SPACES (REFERENCE ARCH FOR ADDITIONAL REQUIREMENTS). PROVIDE FREE-DRAINING GRANULAR FILL PER SOILS REPORT.
5. CJ INDICATES CONTROL JOINT. FOR INFORMATION, REF 1/S4.1 (PROVIDE AT 15'-0" OC SPACING EACH WAY MAX).
6. REFERENCE MECHANICAL, PLUMBING, ELECTRICAL AND SPRINKLER DRAWINGS FOR ALL DUCTS, CHASES AND PIPES. REFERENCE ARCHITECTURAL DRAWINGS FOR STAIR DETAILS AND GUARDRAILS.
7. ALL WOOD EXPOSED TO CONCRETE, WEATHER, OR WITHIN 8" OF FINISHED GRADE SHALL BE PRESSURE-TREATED.
8. CONCRETE DIMENSIONS: CONTRACTOR SHALL LOCATE ALL DOOR OPENINGS IN EXTERIOR FOUNDATION WALLS AND VERIFY WITH ARCHITECT PRIOR TO POURING CONCRETE. CONTRACTOR TO COORDINATE CURBS.
9. CONTRACTOR TO VERIFY TOP OF CONCRETE (T/CONC) WALL ELEVATIONS ON ALL PARTIAL HEIGHT RETAINING WALLS. MAINTAIN T/WALL TO BE A MINIMUM 6" ABOVE FINISH GRADE.
10. MOISTURE PROOF ALL BASEMENT WALLS PER ARCHITECT.
11. ⧈ INDICATES WOOD POST/COLUMN ((3) 2x4 OR (2) 2x6 MIN).
12. ○ INDICATES PIPE COLUMN.
13. □ INDICATES HSS COLUMN.
14. INDICATES CONC WALL ON CONCRETE FOOTING.
15. INDICATES 2x BEARING WALL ON CONCRETE FOOTING. ALL EXTERIOR WALLS ARE 2x6 AT 16" OC BEARING WALLS AND SHEARWALLS WHERE NOTED. ALL INTERIOR BEARING WALLS ARE 2x6 AT 24" OC OR 2x4 AT 16" OC WALLS AND SHEARWALLS WHERE NOTED. FOR THE STUD GRADE, REFER TO S1.1.
16. INDICATES STRUCTURAL WOOD SHEARWALL. SHEATHING AND ANCHORAGE REQUIREMENTS PER SHEARWALL SCHEDULE. ALL EXTERIOR SHEARWALLS SHALL BE TYPE A UNLESS NOTED OTHERWISE ON PLAN. CONTRACTOR TO COORDINATE PENETRATIONS IN SHEARWALL SHEATHING GREATER THAN 4 1/2" W/ ENGINEER OF RECORD.
17. INDICATES NON-STRUCTURAL PARTITION WALL. WALL TYPES AND ANCHORAGE REQUIREMENTS PER ARCHITECTURAL DRAWINGS.
18. A SHEARWALL SYMBOL – REFERENCE SHEARWALL SCHEDULE ON 1/S2.2. INSTALL SHEATHING ON SYMBOL SIDE OF WALL FOR ONE-SIDED SHEARWALLS.
19. 0 HOLDOWN SYMBOL – REFERENCE HOLDOWN SCHEDULE ON 2/S2.2. HOLDOWNS OCCUR AT EACH END OF SHEARWALLS UNLESS INDICATED OTHERWISE ON PLAN.
20. X/SX.X SECTION CUT – DETAIL NUMBER/SHEET NUMBER.
21. T/FINISH GRADE PER ARCHITECT, TYP.
22. REF ARCHITECTURAL DRAWINGS FOR DIMENSIONS NOT SHOWN, TYP.
23. ALL SIMPSON HARDWARE IN CONTACT WITH PRESSURE TREATED LUMBER, CONCRETE OR MASONRY SHALL HAVE "ZMAX" COATING PER MFR, TYP.
24. ALL STEEL LOCATED OUTSIDE THE BUILDING ENVELOPE SHALL BE HOT-DIPPED GALVANIZED, UNO.
25. CONTRACTOR TO NOTIFY ENGINEER OF RECORD OF DISCREPANCIES BETWEEN FIELD CONDITIONS AND THOSE SHOWN IN THESE DOCUMENTS PRIOR TO CONSTRUCTION TYP.
26. REFERENCE FOUNDATION DETAILS FOR DETAILS DENOTED "TYPICAL" FOR ADDITIONAL INFORMATION.

THESE DRAWINGS ARE THE ORIGINAL UNPUBLISHED WORK OF THE ARCHITECT AND MAY NOT BE USED OR DISCLOSED WITHOUT THE WRITTEN PERMISSION OF THE ARCHITECT.
© MODERN HOUSE

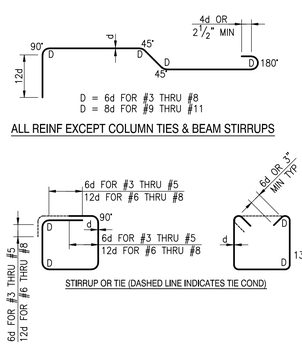

BAR SIZE	d (ø)	4d	6d	12d
#3	3/8"	1 1/2"	2 1/4"	4 1/2"
#4	1/2"	2"	3"	6"
#5	5/8"	2 1/2"	3 3/4"	7 1/2"

STANDARD HOOKS & BENDS

SCALE: NONE 1

BAR SIZE	Ld	Class B Splice
f'c = 3000psi		
#3	17	23
#4	22	29
#5	28	37

NOTE:

VALUES FOR UNCOATED REINFORCING AND NORMAL WEIGHT CONCRETE WITH CLEAR SPACING > db, CLEAR COVER > db AND MINIMUM STIRRUPS OR TIES THROUGHOUT Ld OR CLEAR SPACING > 2db AND CLEAR COVER > db.

LAP SPLICE & DEVELOPMENT LENGTH SCHEDULE

SCALE: NONE 2

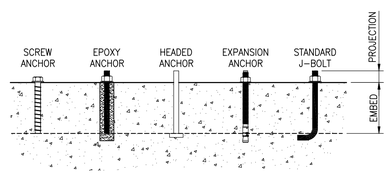

NOTES:

1. CONTRACTOR SHALL DETERMINE REQ'D THREADED PROJECTION SUITABLE FOR MATERIAL BEING FASTENED & REQ'D TOLERANCES UNO.
2. CONTRACTOR MAY SELECT ALTERNATE ANCHOR BOLT TO THAT SHOWN ON PLANS W/ THE PRIOR APPROVAL FROM THE ENGINEER OF RECORD.
3. SCREW ANCHORS FOR INTERIOR APPLICATIONS ONLY.

TYPICAL ANCHOR BOLT TYPES

SCALE: NTS 3

TYPE	SIZE	REINFORCING
1	1'-0"Wx10"DP	(2) #5 CONT BOTT
2	2'-6"Wx24"DP	(3) #5 CONT BOTT
3	2'-6"Wx36"DP	(3) #5 CONT T&B
4	3'-0"Wx24"DP	(3) #5 CONT BOTT
5	5'-0"Wx36"DP	(5) #5 CONT BOTT

CONT FOOTING SCHEDULE

SCALE: NONE 5

RETAINING WALL/FOOTING SCHEDULE

WALL TYPE	H MAX	TOE	ts	HEEL	tf	WALL REINF		FOOTING REINF	
						VERT	HORIZ	TRANSVERSE	LONGITUDINAL
A	6'-0"	2'-0"	8"	1'-4"	2'-0"	#5 AT 18" OC	#5 AT 18" OC	#5 AT 18" OC	(4) #4
B	9'-0"	3'-6"	8"	1'-10"	2'-0"	#5 AT 6" OC	#5 AT 18" OC	#5 AT 18" OC	(6) #4

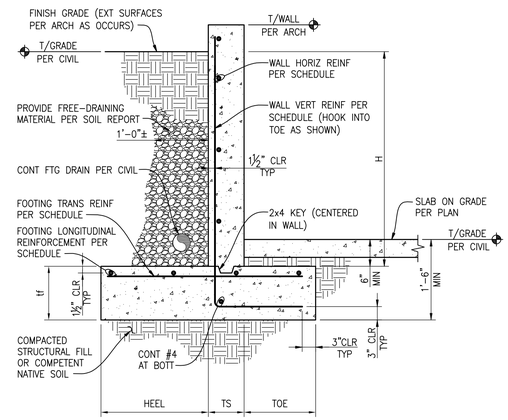

NOTE:

CONTRACTOR TO VERIFY REQUIRED WALL HEIGHT IN FIELD PRIOR TO CONSTRUCTION

CONCRETE RETAINING WALL SCHEDULE

SCALE: 3/4"=1'-0" 4

MODERN HOUSE

ARCHITECTURE & DESIGN
1265 Indiana St.
San Francisco Ca. 94107
P. 415.800.8520
C. 415.596.7281
modernhouse@mac.com
www.modernhousearchitects.com

REGISTERED PROFESSIONAL ENGINEER JEFFREY S. FITCH C64889 Exp. 06/30/21 CIVIL STATE OF CALIFORNIA

Curt Cline Architect

SFA Design Group, LLC
STRUCTURAL | CIVIL | GEOTECHNICAL | LAND USE PLANNING
9020 SW Washington Square Dr., Suite 505
Portland, Oregon 97223
1813 Rutan Dr., Suite C, Livermore, CA 94551
1912 S 146th St., Seattle, WA 98168
p: 503.641.8311 www.sfadg.com

BUILDING PERMIT REVIEW
029-35-005
PANGAN RESIDENCE
AUGUSTA CT
MILPITAS, CA

Revisions:

1	12.21.2018
2	11.24.2020

FOUNDATION PLAN

PROJECT : 17-079

DATE : 04.25.2018

SHEET : S2.1

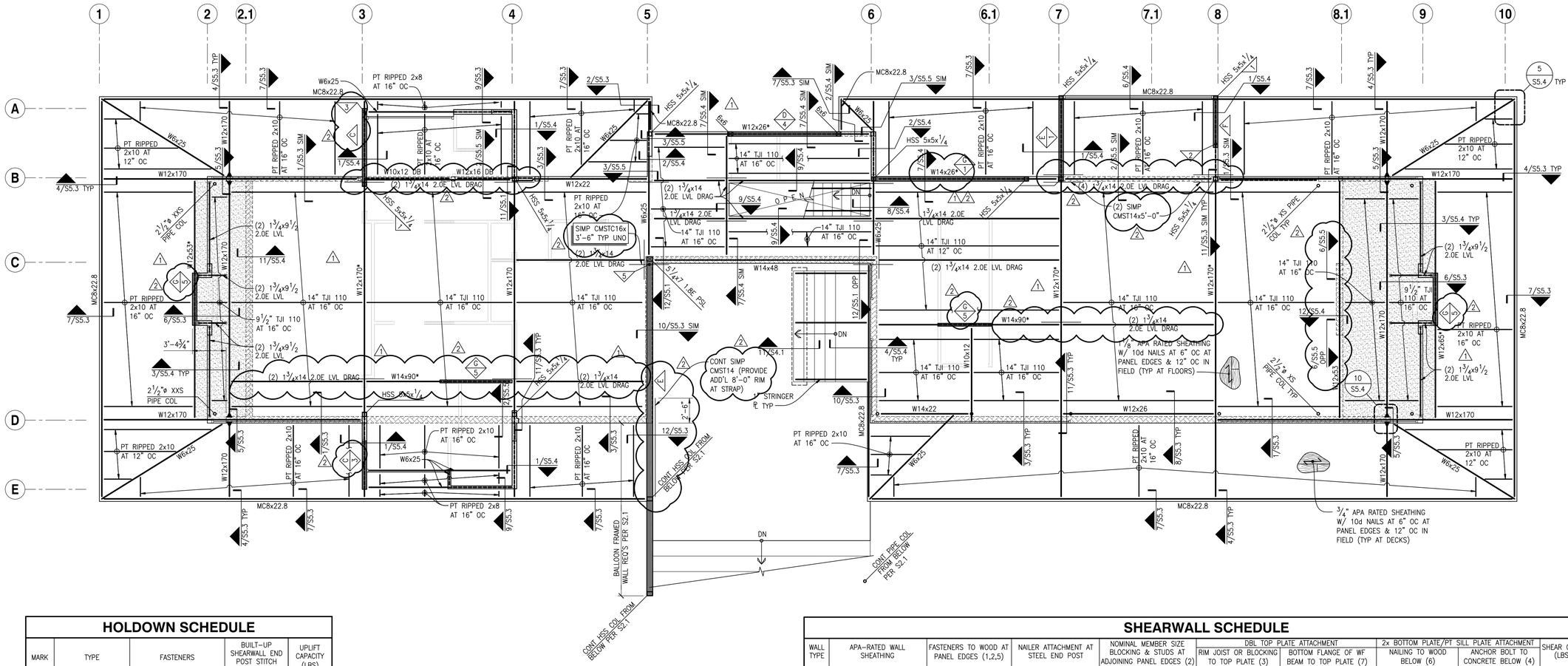

HOLDOWN SCHEDULE

MARK	TYPE	FASTENERS	BUILT-UP SHEARWALL END POST STITCH NAILING	UPLIFT CAPACITY (LBS)
0	HOLDOWN NOT REQUIRED	------	------	------
1	HSS COLUMN PER PLAN	PER SHEARWALL SCHEDULE	N/A	----
2	SIMP HDU2-SDS2.5	5/8"ø WTR TO STEEL BEAM	10d AT 5" OC	3075
3	SIMP HDU4-SDS2.5	5/8"ø WTR TO STEEL BEAM	10d AT 3 1/2" OC	4565
4	SIMP HDU8-SDS2.5	7/8"ø WTR TO STEEL BEAM	10d AT 2 1/2" OC	6765
5	SIMP HDU14-SDS2.5 TO 4x8 MIN	1"ø WTR TO STEEL BEAM	USE SOLID MEMBER	14390

NOTES:
1. ADDITIONAL INFORMATION PER 5/S4.1 & 9/S5.1.
2. ALL HOLDOWNS SHALL BE ATTACHED TO (2) 2x6 MIN UNO.
3. USE SIMP CNW COUPLERS AS REQ'D & SIMP CNW TRANSITION COUPLERS WHERE HOLDOWN ANCHOR BOLT DOES NOT MATCH HOLDOWN HOLE SIZE.

HOLDOWN SCHEDULE

SCALE: NONE — 2

2ND FLOOR FRAMING PLAN

SCALE: 3/16"=1'-0" — PLAN

SHEARWALL SCHEDULE

WALL TYPE	APA-RATED WALL SHEATHING	FASTENERS TO WOOD AT PANEL EDGES (1,2,5)	NAILER ATTACHMENT AT STEEL END POST	NOMINAL MEMBER SIZE BLOCKING & STUDS AT ADJOINING PANEL EDGES (2)	DBL TOP PLATE ATTACHMENT		2x BOTTOM PLATE/PT SILL PLATE ATTACHMENT		SHEAR CAPACITY (LBS/FT)
					RIM JOIST OR BLOCKING TO TOP PLATE (3)	BOTTOM FLANGE OF WF BEAM TO TOP PLATE (7)	NAILING TO WOOD BELOW (6)	ANCHOR BOLT TO CONCRETE BELOW (4)	
A	15/32 APA RATED SHTG	8d AT 6" OC	1/2"ø WTR's AT 18" OC	2x	SIMP A35 OR LTP4 AT 30" OC	(2) ROWS SIMP SDS 1/4x2 1/2" MIN EMBED AT 32" OC	16d AT 8" OC	5/8"ø AT 48" OC	260
B	15/32 APA RATED SHTG	8d AT 4" OC	1/2"ø WTR's AT 18" OC	3x	SIMP A35 OR LTP4 AT 20" OC	(2) ROWS SIMP SDS 1/4x2 1/2" MIN EMBED AT 32" OC	16d AT 5" OC	5/8"ø AT 42" OC	380
C	15/32 APA RATED SHTG	8d AT 3" OC	1/2"ø WTR's AT 18" OC	3x	SIMP A35 OR LTP4 AT 16" OC	(2) ROWS SIMP SDS 1/4x2 1/2" MIN EMBED AT 32" OC	16d AT 4" OC	5/8"ø AT 32" OC	490
D	15/32 APA RATED SHTG	8d AT 2" OC	1/2"ø WTR's AT 18" OC	3x	SIMP A35 OR LTP4 AT 12" OC	(2) ROWS SIMP SDS 1/4x2 1/2" MIN EMBED AT 24" OC	(2) ROWS 16d AT 6" OC	5/8"ø AT 24" OC	640
E	15/32 APA RATED SHTG (BOTH SIDES)	8d AT 4" OC	1/2"ø WTR's AT 16" OC	3x	SIMP A35 OR LTP4 AT 10" OC	(2) ROWS SIMP SDS 1/4x2 1/2" MIN EMBED AT 20" OC	(2) ROWS 16d AT 5" OC	5/8"ø AT 20" OC	760
F	15/32 APA RATED SHTG (BOTH SIDES)	8d AT 3" OC	1/2"ø WTR's AT 12" OC	3x	SIMP A35 OR LTP4 AT 8" OC	(2) ROWS SIMP SDS 1/4x2 1/2" MIN EMBED AT 16" OC	(2) ROWS 16d AT 4" OC	5/8"ø AT 16" OC	980
G	19/32 APA RATED SHTG (BOTH SIDES)	10d AT 2" OC	1/2"ø WTR's AT 7" OC	3x	SIMP A35 OR LTP4 AT 4 1/2" OC	(2) ROWS SIMP SDS 1/4x2 1/2" MIN EMBED AT 8" OC	(4) ROWS 16d AT 4" OC	5/8"ø AT 8" OC	1740

NOTES:
1. PANEL EDGE NAILING APPLIES TO ALL PANEL EDGES AT SHEATHED SHEARWALLS. NAIL SHEATHING TO INTERMEDIATE FRAMING W/ PANEL NAILS AT 12" OC. PROVIDE 2x MIN BLOCKING AT ALL PANEL EDGES.
2. WHERE FRAMING AT ADJOINING PANEL EDGES IS A SINGLE 3" NOMINAL OR GREATER MEMBER, NAILS SHALL BE STAGGERED. (2) 2x MEMBERS MAY BE USED IN LIEU OF A 3x MEMBER PROVIDED THEY ARE NAILED TOGETHER WITH NAILING MATCHING THAT OF THE BOTTOM PLATE TO WOOD BELOW NAILING AND NAILS ARE STAGGERED WHEN SPACING IS LESS THAN 4" OC.
3. SIMP LTP4 SHALL BE APPLIED TO FACE OF WALL/FACE OF RIM/BLOCKING & SIMP A35 SHALL BE APPLIED TO TOP OF DOUBLE TOP PLATE AND INSIDE FACE OF RIM/BLOCKING. CONTRACTOR MAY USE 30% MORE SIMP A34'S IN LIEU OF SPECIFIED SIMP A35'S.
4. WOOD SHEAR PLATES FOR SHEARWALLS SHALL INCLUDE STEEL WASHERS OF 3ga x 3"x3" BETWEEN THE SILL PLATE AND NUT. REF 3/S4.1 FOR ADDL INFO.
5. WHERE PANELS ARE APPLIED ON BOTH FACES OF WALL AND NAIL SPACING IS LESS THAN 6" OC PANEL JOINTS SHALL BE OFFSET TO FALL ON DIFFERENT FRAMING MEMBERS OR FRAMING MEMBERS SHALL BE 3" NOMINAL OR GREATER AND NAILS ON EACH SIDE SHALL BE STAGGERED. WHERE PANELS ARE OFFSET REFER TO NOTE (2).
6. FOR VALUES WITH MORE THEN (2) ROWS OF BOTTOM PLATE NAILING, CONTRACTOR TO USE 3.5" MIN THICK RIM BOARD OR (2) 1.75" RIM BOARDS NAILED TOGETHER W/ (3) ROWS 16d COMMON NAILS AT 4" OC. STAGGER BOTTOM PLATE NAILS IN ROWS 1 3/4" APART MIN.
7. WHERE (2) ROWS CAN NOT BE INSTALLED TO TOP PLATE, USE (1) ROW AND DOUBLE INDICATED SPACING.

SHEARWALL SCHEDULE

SCALE: NONE — 1

FLOOR FRAMING PLAN NOTES:

1. REFERENCE S1.1 & S1.2 FOR GENERAL STRUCTURAL NOTES, DESIGN CRITERIA, ABBREVIATIONS AND LEGEND.
2. T/PLYWOOD ELEVATION PER ARCHITECT TYPICAL. FLOOR SHEATHING TO BE 3/4" MIN T&G APA-RATED FLOOR SHEATHING WITH 10d NAILS AT 6" OC AT PANEL EDGES, 12" OC AT INTERIOR SUPPORTS.
3. FOR ALL DUCTS, CHASES AND PIPES. REFERENCE MECHANICAL, PLUMBING, ELECTRICAL AND SPRINKLER DRAWINGS.
4. CONTRACTOR IS RESPONSIBLE FOR ALL TEMPORARY SHORING.
5. ALL WOOD EXPOSED TO CONCRETE, WEATHER, OR WITHIN 8" OF FINISHED GRADE SHALL BE PRESSURE-TREATED.
6. ALL EXTERIOR WALLS ARE 2x6 AT 16" OC BEARING WALLS AND SHEARWALLS WHERE NOTED. ALL INTERIOR BEARING WALLS ARE 2x6 AT 24" OC OR 2x4 AT 16" OC WALLS AND SHEARWALLS WHERE NOTED. FOR THE STUD GRADE, REFER TO S1.1
7. PROVIDE 1 1/4" 1.3E LSL RIM BOARD AT EXTERIOR WALLS, TYP.
8. ALL WOOD BEAMS SHALL BE SUPPORTED ON (3) 2x4 OR (2) 2x6 MIN, UNO.
9. BLOCKING: PROVIDE SOLID BLOCKING OVER ALL SHEARWALLS AND BEARING WALLS. AT WALLS PARALLEL TO FRAMING ALIGN JOIST OVER WALL.
10. HANGERS: ALL TJI HANGERS TO BE SIMPSON ITS OR IUT TYPE, UNO. ALL 2x HANGERS TO BE SIMPSON LUS TYPE, UNO. ALL BEAM HANGERS TO BE SIMPSON HU OR HUC TYPE, UNO. ATTACH TO WOOD OR STEEL BEAMS PER MFR REQ'S TYP.
11. ALL MULTI-LAM BUILT-UP BEAMS TO HAVE (3) ROWS OF 16d NAILS AT 12" OC EACH 1 1/2" OR 1 3/4" LAM AND (2) ROWS OF 3/8"ø x6" LAG SCREWS OR 3/8"ø THRU-BOLTS AT 24" OC STAGGERED EACH 3 1/2" TO 7" LAM.
12. SIMPSON STRAP DRAG TIES INDICATED ON PLAN ARE TO BE CENTERED BETWEEN ELEMENTS CONNECTED (WALL TOP PLATE, HEADER, BLOCKING, BEAM).
13. INDICATES SPECIAL DIAPHRAGM NAILING REGIONS. USE 10d NAILS AT 4" OC AT PANEL EDGES, 2 1/2" OC AT DIAPHRAGM BOUNDARIES, AND 12" OC IN FIELD. BLOCK ALL PLYWOOD EDGES W/ 4x BLOCKING (STAGGER NAILS ON EACH SIDE OF PLYWOOD JOINTS.)
14. BEAMS INDICATED W/ AN ASTERISK (*) SUPPORT DISCONTINUOUS SHEARWALLS AND HAVE BEEN DESIGNED PER ASCE 7-10 12.3.3.3.
15. INDICATES MOMENT CONN - REF 5/S5.3
16. INDICATES WOOD POST/COLUMN ((3) 2x4 OR (2) 2x6 MIN).
17. INDICATES WOOD POST/COLUMN BELOW.
18. INDICATES PIPE COLUMN.
19. INDICATES PIPE COLUMN BELOW.
20. INDICATES HSS COLUMN.
21. INDICATES HSS COLUMN BELOW.
22. INDICATES NON-STRUCTURAL PARTITION WALL. WALL TYPES AND ANCHORAGE REQUIREMENTS PER ARCHITECTURAL DRAWINGS.
23. INDICATES STRUCTURAL WOOD SHEARWALL. SHEATHING AND ANCHORAGE REQUIREMENTS PER SHEARWALL SCHEDULE. ALL EXTERIOR SHEARWALLS SHALL BE TYPE A UNLESS NOTED OTHERWISE ON PLAN. CONTRACTOR TO COORDINATE PENETRATIONS IN SHEARWALL SHEATHING GREATER THAN 4 1/2" W/ ENGINEER OR RECORD.
24. INDICATES 2x STRUCTURAL BEARING WALL.
25. INDICATES STRUCTURAL BEARING WALL BELOW.
26. INDICATES STRUCTURAL SHEARWALL BELOW. 1
27. INDICATES STRUCTURAL CONCRETE WALL BELOW.
28. X/SX.X SECTION CUT - DETAIL NUMBER/SHEET NUMBER. 1
29. A SHEARWALL SYMBOL - REFERENCE SHEARWALL SCHEDULE 1/S2.2. INSTALL SHEATHING ON SYMBOL SIDE OF WALL FOR ONE-SIDED SHEARWALLS. 1
30. 2 HOLDOWN SYMBOL - REFERENCE HOLDOWN SCHEDULE 2/S2.2. HOLDOWNS OCCUR AT EACH END OF SHEARWALLS UNLESS INDICATED OTHERWISE ON PLAN.
31. INSTALL ALL METAL CONNECTORS PER MANUFACTURERS RECOMMENDATIONS TYP.
32. NAIL FLOOR SHEATHING TO DRAG MEMBERS, RIMS AND BLOCKING WITH DIAPHRAGM PANEL EDGE NAILING MINIMUM (TYPICAL UNO).
33. ALL STEEL LOCATED OUTSIDE OF THE BUILDING ENVELOPE SHALL BE HOT-DIP GALVANIZED, UNO.
34. CONTRACTOR SHALL ENSURE THAT ALL FASTENERS FROM ABOVE DO NOT FULLY PENETRATE DECKING SUCH THAT THEY ARE NOT VISIBLE FROM BELOW.
35. BALLOON FRAME ALL WALLS GREATER THAN ONE LEVEL WITHOUT FLOOR OR ROOF SUPPORT. REF PLAN FOR REQUIREMENTS.
36. CONTRACTOR TO NOTIFY ENGINEER OF RECORD OF DISCREPANCIES BETWEEN FIELD CONDITIONS AND THOSE SHOWN IN THESE DOCUMENTS PRIOR TO CONSTRUCTION TYP.
37. ALL SIMPSON HARDWARE IN CONTACT WITH PRESSURE TREATED LUMBER, CONCRETE OR MASONRY SHALL HAVE "ZMAX" COATING PER MFR, TYP.
38. PROVIDE SOLID BLOCKING THROUGH FLOOR DECK BELOW ALL COLUMNS & POSTS. PROVIDE SIMILAR COLUMN/POST IN WALL BELOW, UNO.
39. REFERENCE FRAMING DETAILS FOR DETAILS DENOTED "TYPICAL" FOR ADDITIONAL INFORMATION.

THESE DRAWINGS ARE THE ORIGINAL UNPUBLISHED WORK OF THE ARCHITECT AND MAY NOT BE USED OR PUBLISHED WITHOUT THE WRITTEN PERMISSION OF THE ARCHITECT.
© MODERN HOUSE

MODERN HOUSE
ARCHITECTURE & DESIGN
1265 Indiana St.
San Francisco Ca. 94107
P. 415.800.8520
C. 415.596.7281
modernhouse@mac.com
www.modernhousearchitects.com

REGISTERED PROFESSIONAL ENGINEER JEFFREY S. FITCH C64889 Exp. 06/30/21 CIVIL STATE OF CALIFORNIA

Curt Cline Architect

SFA Design Group, LLC
STRUCTURAL | CIVIL | GEOTECHNICAL | LAND USE PLANNING
9020 SW Washington Square Dr., Suite 505
Portland, Oregon 97223
1813 Rutan Dr., Suite C, Livermore, CA 94551
1912 S 146th St., Seattle, WA 98168
p: 503.641.8311 www.sfadg.com

BUILDING PERMIT REVIEW
029-35-005
PANGAN RESIDENCE
AUGUSTA CT
MILPITAS, CA

Revisions:
1 12.21.2018
2 11.24.2020

2ND FLOOR FRAMING PLAN

PROJECT : 17-079
DATE : 04.25.2018
SHEET : S2.2

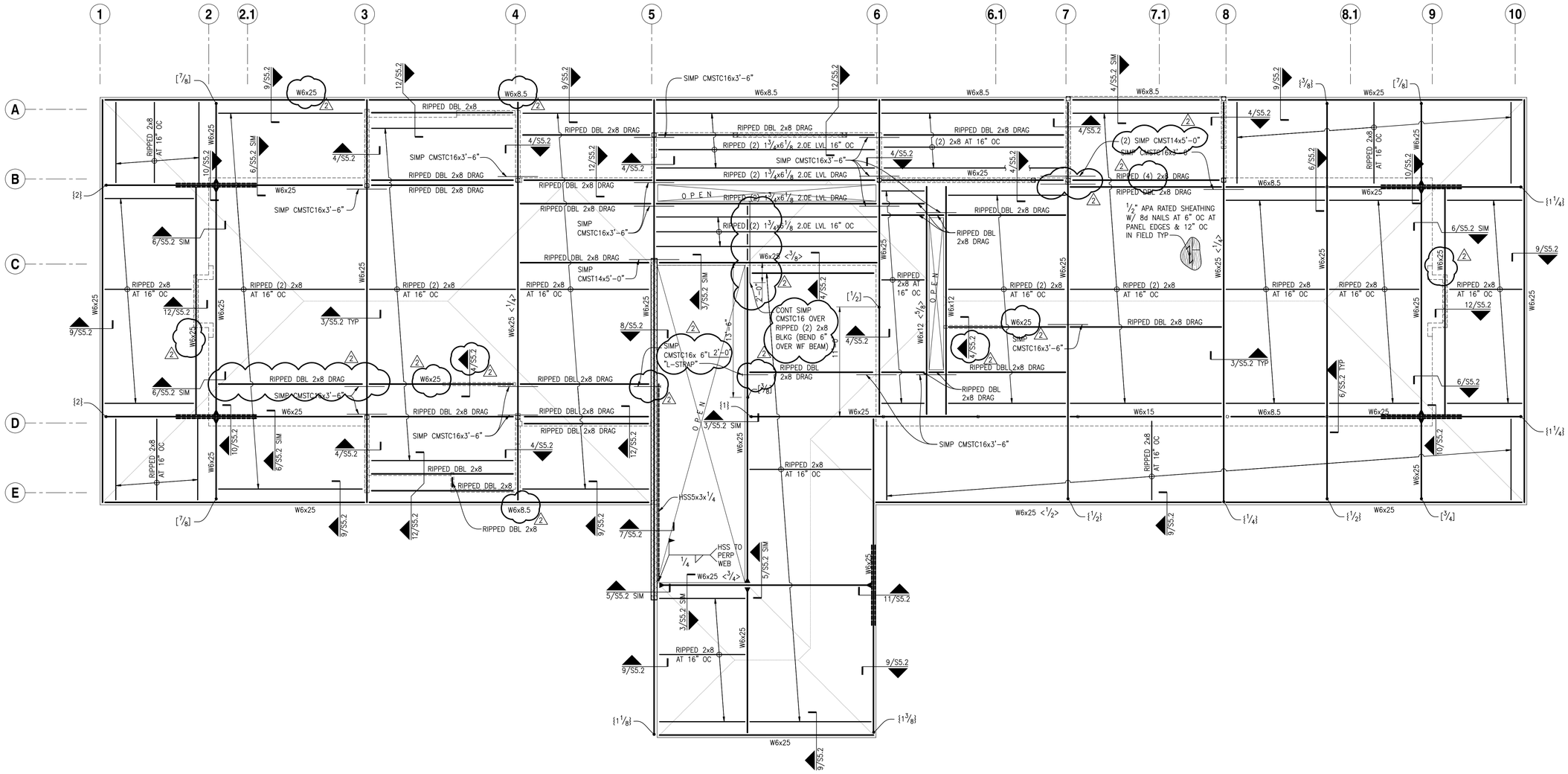

ROOF FRAMING PLAN

SCALE: 3/16"=1'-0"

N PLAN

ROOF FRAMING PLAN NOTES:

1. REFERENCE S1.1 & S1.2 FOR GENERAL STRUCTURAL NOTES, DESIGN CRITERIA, ABBREVIATIONS AND LEGEND.
2. PLYWOOD ROOF DECK TO BE 1/2" APA-RATED SHEATHING TO BE NAILED TO ROOF FRAMING MEMBERS WITH 8d NAILS AT 6" OC AT PANEL EDGES AND 8d NAILS AT 12" OC IN FIELD.
3. FOR ALL DUCTS, CHASES AND PIPES. REFERENCE MECHANICAL, PLUMBING, ELECTRICAL AND SPRINKLER DRAWINGS.
4. CONTRACTOR IS RESPONSIBLE FOR ALL TEMPORARY SHORING.
5. HANGERS: ALL 2x HANGERS TO BE SIMPSON LUS TYPE, UNO. ALL BEAM HANGERS TO BE SIMPSON HU OR HUC TYPE, UNO.
6. BLOCKING: PROVIDE SOLID BLOCKING OVER ALL SHEARWALLS AND BEARING WALLS. AT SHEARWALLS PARALLEL TO FRAMING, ALIGN MEMBER OVER SHEARWALL.
7. SIMPSON STRAP DRAG TIES INDICATED ON PLAN ARE TO BE CENTERED BETWEEN ELEMENTS CONNECTED UNO (TOP PLATE, BEAM, TRUSS, ETC).
8. <x> [x] {x} INDICATES CAMBER IN INCHES (POSITIVE IS UPWARD). WHERE INDICATED WITH A LEADER, MAX CAMBER OCCURS AT THAT SPECIFIC POINT. REF 7/S5.5 FOR ADD'L INFO.
9. 2x8 ROOF JOISTS MAY BE RIPPED TO 6 1/8" MIN DEPTH AT ROOF
10. ◄□► INDICATES MOMENT CONN – REF 5/S5.2
11. ○ INDICATES PIPE COLUMN BELOW.
12. □ INDICATES HSS COLUMN BELOW.
13. ⊧□⊧ INDICATES STRUCTURAL BEARING WALL BELOW.
14. ⊧▭⊧ INDICATES STRUCTURAL SHEARWALL BELOW.
15. X/SX.X SECTION CUT – DETAIL NUMBER/SHEET NUMBER.
16. CONTRACTOR SHALL ENSURE THAT ALL FASTENERS FROM ABOVE DO NOT FULLY PENETRATE DECKING SUCH THAT THEY ARE NOT VISIBLE FROM BELOW.
17. ALL STEEL TO STEEL CONNECTIONS TO USE A325N THRU-BOLTS TYP UNO.
18. ALL STEEL LOCATED OUTSIDE OF THE BUILDING ENVELOPE SHALL BE HOT-DIP GALVANIZED, UNO AND ALL WOOD LOCATED OUTSIDE OF THE BUILDING ENVELOPE TO BE PRESSURE TREATED, UNO.
19. NAIL SHEATHING TO DRAG MEMBERS WITH DIAPHRAGM PANEL EDGE NAILS PER PLAN.
20. NAIL ROOF SHEATHING TO DRAG MEMBERS, RIMS AND BLOCKING WITH DIAPHRAGM PANEL EDGE NAILING MINIMUM (TYPICAL UNO).
21. CONTRACTOR TO NOTIFY ENGINEER OF RECORD OF DISCREPANCIES BETWEEN FIELD CONDITIONS AND THOSE SHOWN IN THESE DOCUMENTS PRIOR TO CONSTRUCTION TYP.
22. REFERENCE FRAMING DETAILS FOR DETAILS DENOTED "TYPICAL" FOR ADDITIONAL INFORMATION.

THESE DRAWINGS ARE THE ORIGINAL UNPUBLISHED WORK OF THE ARCHITECT AND MAY NOT BE USED, DISCLOSED OR REPRODUCED WITHOUT THE WRITTEN PERMISSION OF THE ARCHITECT.
© 2018
© MODERN HOUSE

MODERN HOUSE

ARCHITECTURE & DESIGN
1265 Indiana St.
San Francisco Ca. 94107
P. 415.800.8520
C. 415.596.7281
modernhouse@mac.com
www.modernhousearchitects.com

REGISTERED PROFESSIONAL ENGINEER
JEFFREY S. FITCH
C64889
Exp. 06/30/21
CIVIL
STATE OF CALIFORNIA

Curt Cline Architect

SFA Design Group, LLC
STRUCTURAL | CIVIL | GEOTECHNICAL | LAND USE PLANNING
9020 SW Washington Square Dr., Suite 505
Portland, Oregon 97223
1813 Rutan Dr., Suite C, Livermore, CA 94551
1912 S 146th St., Seattle, WA 98168
p: 503.641.8311 www.sfadg.com

BUILDING PERMIT REVIEW
029-35-005
PANGAN RESIDENCE
AUGUSTA CT
MILPITAS, CA

Revisions:

1	12.21.2018
2	11.24.2020

ROOF FRAMING PLAN

PROJECT : 17-079

DATE : 04.25.2018

SHEET : **S2.3**

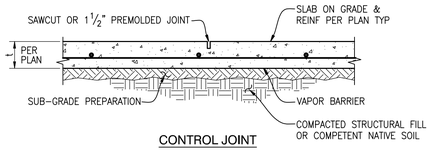

CONTROL JOINT

NOTES:
1. CONSTRUCTION OR CONTROL JOINT LOCATIONS PER FOUNDATION PLAN.
2. USE "SOFTCUT SAW" AS SOON AS POSSIBLE WITHOUT CAUSING RAVELING OF CONCRETE EDGES. SAWCUT ALONG SHORT DIRECTION OF POUR FIRST.
3. PROVIDE CONSTRUCTION/CONTROL JOINT TO ENCLOSE APPROXIMATE SQUARE AREAS OF 225ft² MAX.

TYPICAL SLAB ON GRADE & JOINT DETAILS — 1

SCALE: 1"=1'-0"

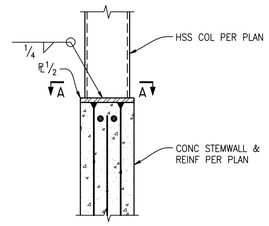

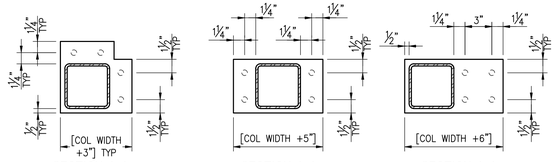

SECTION A-A (CORNER COND) | SECTION A-A (MID-WALL COND) | SECTION A-A (END OF WALL COND)

TYPICAL HSS COL BASEPLATE AT CONC STEMWALL — 2

SCALE: 1½"=1'-0"

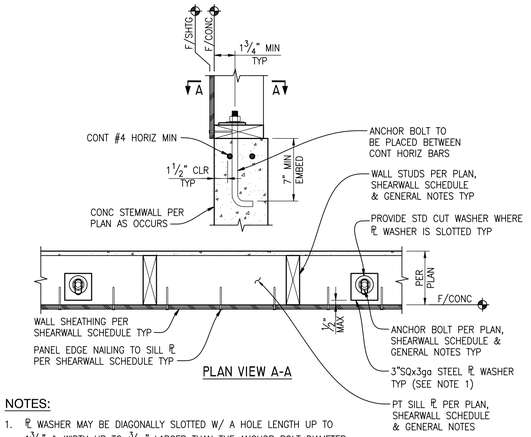

PLAN VIEW A-A

NOTES:
1. ℄ WASHER MAY BE DIAGONALLY SLOTTED W/ A HOLE LENGTH UP TO 1¾" & WIDTH UP TO 5/16" LARGER THAN THE ANCHOR BOLT DIAMETER.
2. ANCHOR BOLTS TO BE LOCATED A MINIMUM OF 15 BAR DIAMETERS FROM END OF CONC.

TYPICAL WOOD SILL PLATE CONNECTION — 3

SCALE: NTS

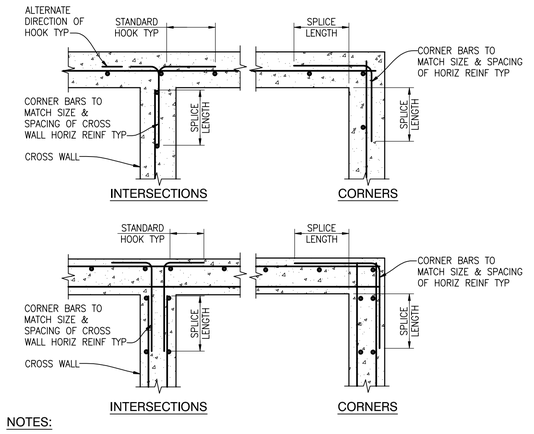

NOTES:
1. REF LAP SPLICE & DEVELOPMENT LENGTH SCHEDULE FOR REQUIRED SPLICE LENGTHS.
2. REF ELEVATIONS, SECTIONS, DETAILS, & GENERAL NOTES FOR WALL REINFORCING.
3. AT FOOTING & STEM WALLS, CORNER BARS TO MATCH FOOTING & STEM WALL HORIZONTAL BARS.

TYPICAL CONC WALL & FOOTING CORNER BARS — 4

SCALE: NTS

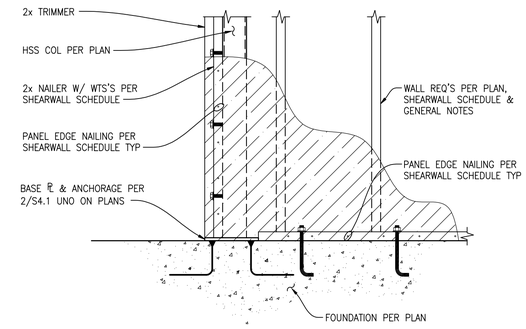

TYPICAL HSS HOLDOWN — 5

SCALE: 1"=1'-0"

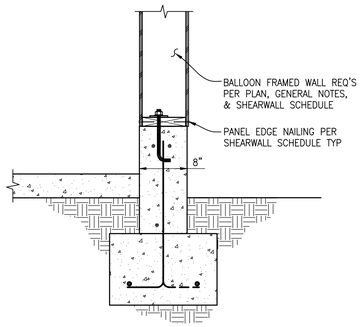

NOTE:
REF 8/S4.1 FOR CALLOUTS IN COMMON

BALLOON FRAMED WALL AT DECK FRAMING — 6

SCALE: 1"=1'-0"

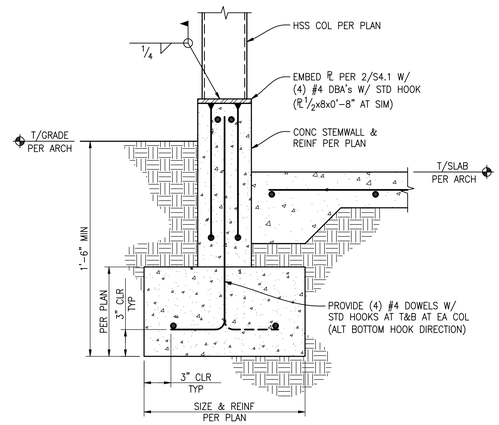

NOTES:
1. REF 8/S4.1 & 2/S4.1 FOR CALLOUTS IN COMMON
2. MAIN FOOTING REINF NOT SHOWN FOR CLARITY

HSS COL TO CONT FOOTING AT ADDL REINF — 7

SCALE: 1½"=1'-0"

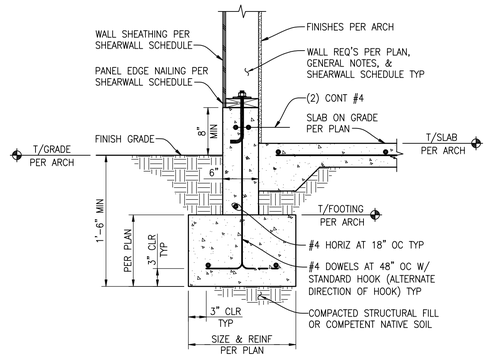

CONT FOOTING AT EXTERIOR WALL — 8

SCALE: 1"=1'-0"

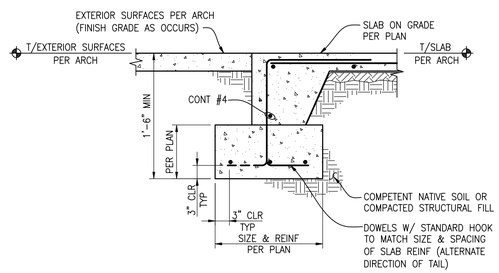

TURNED DOWN SLAB TO CONT FOOTING — 9

SCALE: ¾"=1'-0"

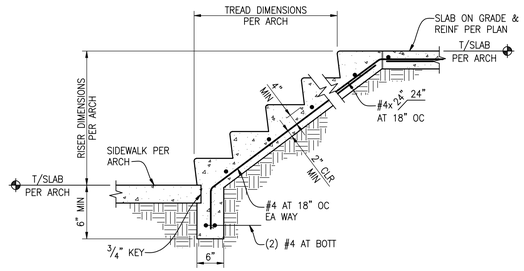

STAIR ON GRADE DETAIL — 10

SCALE: ¾"=1'-0"

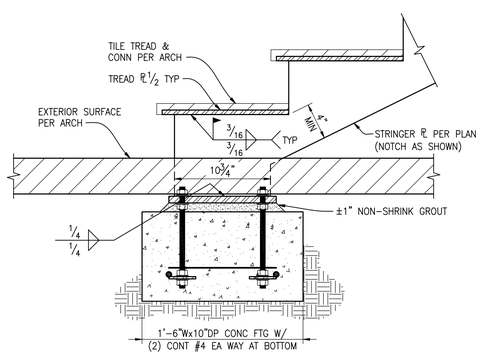

NOTE:
REF 12/S4.1 FOR CALLOUTS IN COMMON

EXTERIOR STAIR AT FOOTING — 11

SCALE: 1½"=1'-0"

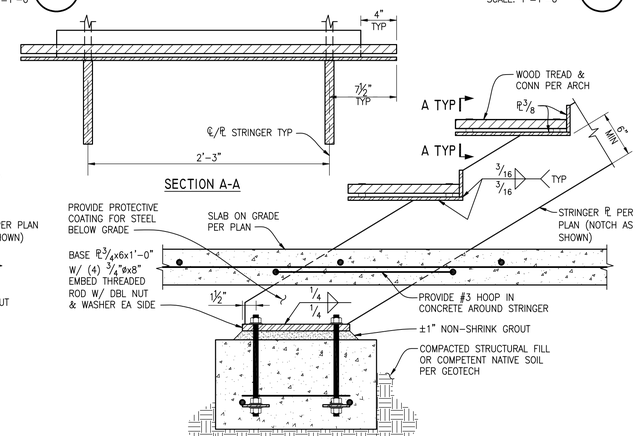

NOTE:
GLASS GUARDRAIL & CONN PER ARCH

INTERIOR STAIR AT FOOTING — 12

SCALE: 1½"=1'-0"

THESE DRAWINGS ARE THE ORIGINAL UNPUBLISHED WORK OF MODERN HOUSE AND MAY NOT BE USED OR REPRODUCED WITHOUT THE WRITTEN PERMISSION OF THE ARCHITECT.
© MODERN HOUSE

MODERN HOUSE
ARCHITECTURE & DESIGN
1265 Indiana St.
San Francisco Ca. 94107
P. 415.800.8520
C. 415.596.7281
modernhouse@mac.com
www.modernhousearchitects.com

REGISTERED PROFESSIONAL ENGINEER JEFFREY S. FITCH C64889 Exp. 06/30/21 CIVIL STATE OF CALIFORNIA

Curt Cline Architect

sfa
SFA Design Group, LLC
STRUCTURAL | CIVIL | GEOTECHNICAL | LAND USE PLANNING
9020 SW Washington Square Dr., Suite 505
Portland, Oregon 97223
1813 Rutan Dr., Suite C, Livermore, CA 94551
1912 S 146th St., Seattle, WA 98168
p: 503.641.8311 www.sfadg.com

BUILDING PERMIT REVIEW

029-35-005

PANGAN RESIDENCE

AUGUSTA CT
MILPITAS, CA

Revisions:

1	12.21.2018
2	11.24.2020

FOUNDATION DETAILS

PROJECT : 17-079

DATE : 04.25.2018

SHEET : S4.1

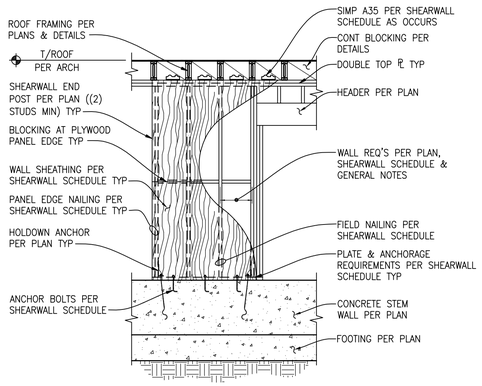

TYPICAL SHEARWALL ELEVATION

SCALE: NTS

1

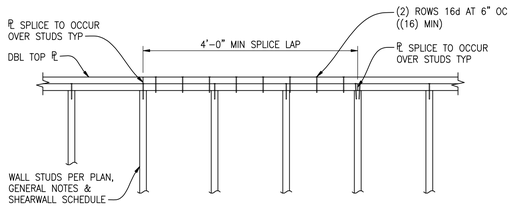

TYPICAL TOP PLATE SPLICE DETAIL

SCALE: $\frac{3}{4}$"=1'-0"

2

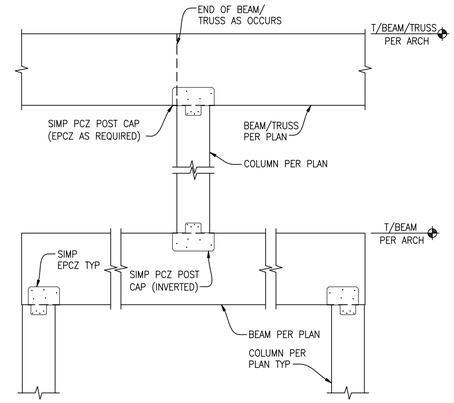

NOTES:
1. FRAMING NOT SHOWN FOR CLARITY
2. BEAMS MAY BE PARALLEL OR PERP

TYPICAL COLUMN & BEAM/TRUSS CONNECTIONS

SCALE: 1"=1'-0"

3

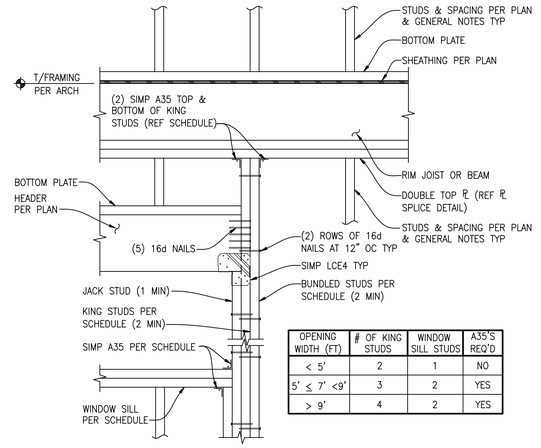

OPENING WIDTH (FT)	# OF KING STUDS	WINDOW SILL STUDS	A35'S REQ'D
< 5'	2	1	NO
5' ≤ 7' <9'	3	2	YES
> 9'	4	2	YES

TYPICAL HEADER FRAMING

SCALE: 1"=1'-0"

4

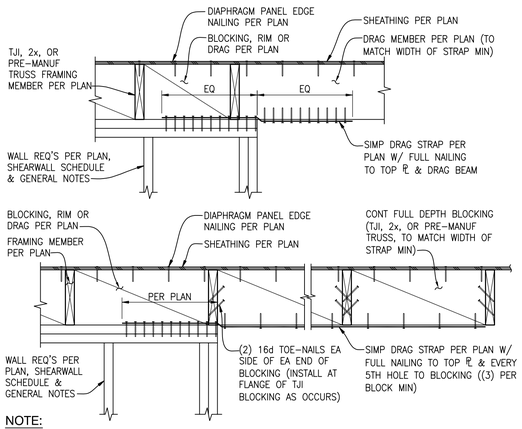

NOTE:

PROVIDE 8d x1$\frac{1}{2}$" NAILS FOR "CS" TYPE STRAPS AND 10d x 1$\frac{1}{2}$" NAILS FOR "CMST" AND "CMSTC" TYPE STRAPS MIN UNO

TYPICAL STRAP ORIENTATION

SCALE: 1"=1'-0"

5

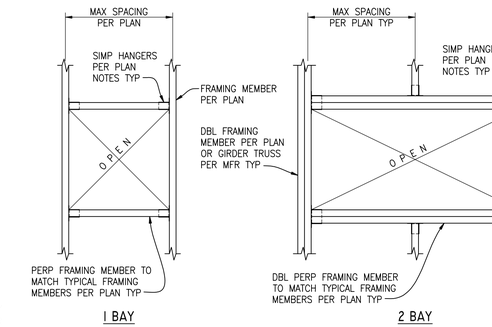

NOTES:
1. REF ARCH FOR OPENING DIMENSIONS
2. WHERE MEMBERS ARE SOLID WEB I-JOISTS PROVIDE CONT FILLER BLOCKS PER MFR OR USE DBL LSL's

TYP 1 & 2 BAY OPENINGS IN WOOD DIAPHRAGM

SCALE: $\frac{3}{4}$"=1'-0"

6

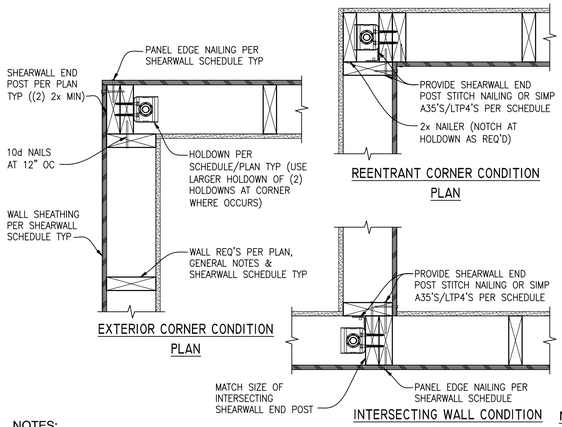

NOTES:
1. PROVIDE NAILER OR DRYWALL CLIPS FOR INTERIOR FINISHES AS REQ'D
2. HOLDOWN STRAP AS OCCURS

TYP HOLDOWN AT INTERSECTING SHEARWALLS

SCALE: 1$\frac{1}{2}$"=1'-0"

7

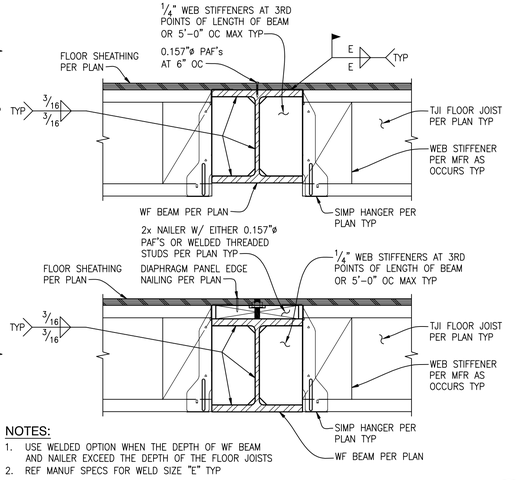

NOTES:
1. USE WELDED OPTION WHEN THE DEPTH OF WF BEAM AND NAILER EXCEED THE DEPTH OF THE FLOOR JOISTS
2. REF MANUF SPECS FOR WELD SIZE "t" TYP

TYP JOIST TO WF FLOOR BEAM CONNECTIONS

SCALE: 1$\frac{1}{2}$"=1'-0"

8

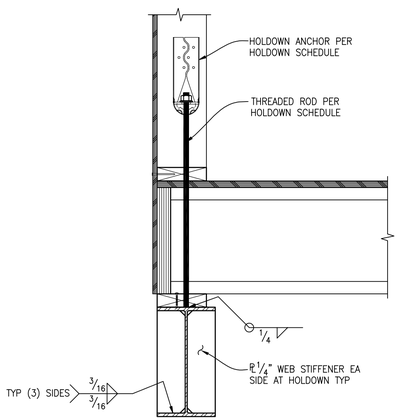

TYPICAL HOLDOWN AT STEEL BEAM

SCALE: 1$\frac{1}{2}$"=1'-0"

9

STANDARD BOLTED CONNECTION SCHEDULE "A"					
BEAM SIZE	BOLTS REQD	PLATE THICKNESS	WELD SIZE t	WELD SIZE t1	CONN CAPACITY
W8,C7,C8	(2) $\frac{7}{8}$"ø	$\frac{1}{4}$	$\frac{3}{16}$	$\frac{1}{4}$	19.0k
W10,C10	(2) $\frac{7}{8}$"ø	$\frac{1}{4}$	$\frac{3}{16}$	$\frac{1}{4}$	19.0k
W12,C12	(3) $\frac{7}{8}$"ø	$\frac{1}{4}$	$\frac{3}{16}$	$\frac{1}{4}$	37.9k
W14	(3) $\frac{7}{8}$"ø	$\frac{1}{4}$	$\frac{3}{16}$	$\frac{1}{4}$	37.9k

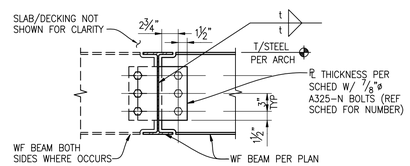

NOTES:
1. REF PLAN FOR BEAM & COLUMN SIZE.
2. PROVIDE STD BOLT HOLES PER AISC.
3. CAPACITIES BASED ON LRFD AISC-3rd EDITION A325N BOLTS, TABLE 10-9.
4. t = SIZE IN SCHEDULE FOR SHOP WELDS, FOR FIELD WELDS ADD $\frac{1}{8}$" TO SIZE IN SCHEDULE.

TYPICAL BOLTED WF FLOOR BEAM CONNECTION

SCALE: 1"=1'-0"

10

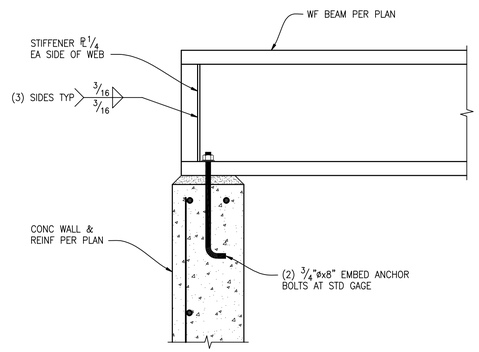

NOTE:

WOOD FRAMING & FINISHES NOT SHOWN FOR CLARITY

WF BEAM PERP TO CONC WALL

SCALE: 1$\frac{1}{2}$"=1'-0"

11

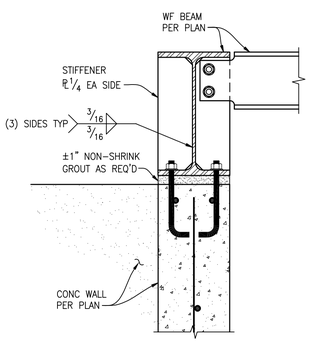

NOTES:
1. WOOD FRAMING NOT SHOWN FOR CLARITY
2. REF 11/S5.1 & 1/S5.2 FOR CALLOUTS IN COMMON

WF BEAM PERP TO CONC WALL

SCALE: 1$\frac{1}{2}$"=1'-0"

12

THESE DRAWINGS ARE THE ORIGINAL UNPUBLISHED WORK OF THE ARCHITECT AND MAY NOT BE USED OR PUBLISHED WITHOUT THE WRITTEN PERMISSION OF THE ARCHITECT.
© MODERN HOUSE

MODERN HOUSE

ARCHITECTURE & DESIGN
1265 Indiana St.
San Francisco Ca. 94107
P. 415.800.8520
C. 415.596.7281
modernhouse@mac.com
www.modernhousearchitects.com

REGISTERED PROFESSIONAL ENGINEER JEFFREY S. FITCH C64889 Exp. 06/30/21 CIVIL STATE OF CALIFORNIA

Curt Cline Architect

sfa
SFA Design Group, LLC
STRUCTURAL | CIVIL | GEOTECHNICAL | LAND USE PLANNING
9020 SW Washington Square Dr., Suite 505
Portland, Oregon 97223
1813 Rutan Dr., Suite C, Livermore, CA 94551
1912 S 146th St., Seattle, WA 98168
p: 503.641.8311 www.sfadg.com

BUILDING PERMIT REVIEW
029-35-005
PANGAN RESIDENCE
AUGUSTA CT
MILPITAS, CA

Revisions:

1	12.21.2018
2	11.24.2020

FRAMING DETAILS

PROJECT : 17-079

DATE : 04.25.2018

SHEET : S5.1

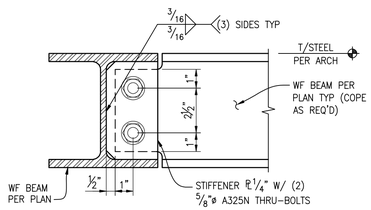

NOTE:
WOOD FRAMING NOT SHOWN FOR CLARITY

TYPICAL W6x BOLTED ROOF BEAM CONNECTION 1

SCALE: 3"=1'-0"

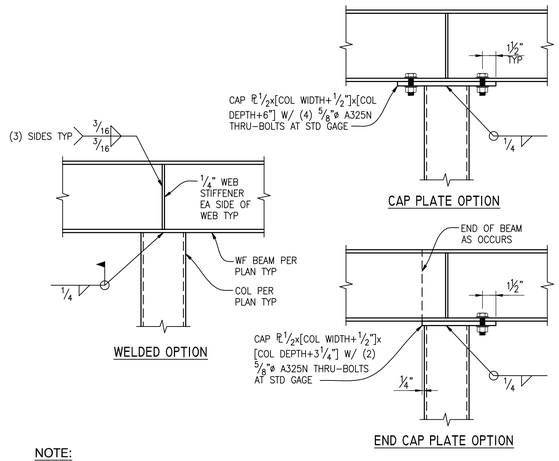

NOTE:
WOOD FRAMING NOT SHOWN FOR CLARITY

TYP WF BEAM TO HSS COLUMN CONNECTIONS 2

SCALE: 1½"=1'-0"

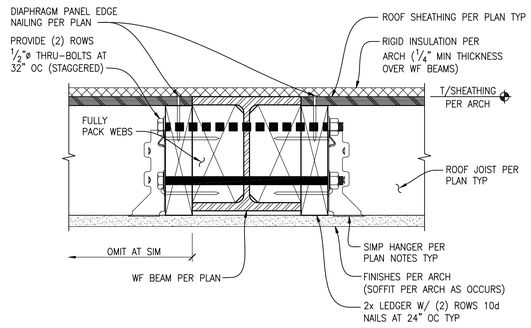

NOTES:
1. C'SINK BOLT HEADS AS REQ'D AT SIM
2. FRAMING PARALLEL AS OCCURS

ROOF FRAMING AT WF BEAM 3

SCALE: 3"=1'-0"

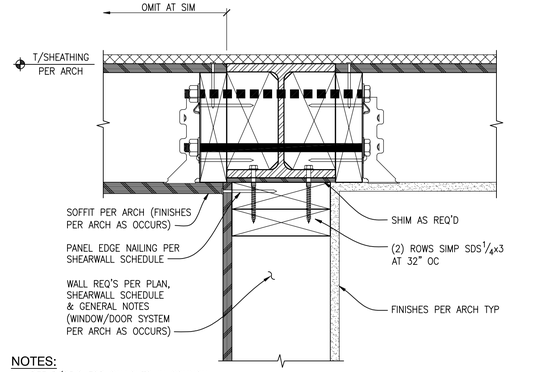

NOTES:
1. REF 3/S5.2 FOR CALLOUTS IN COMMON
2. FRAMING PARALLEL AS OCCURS

WF BEAM AT SHEARWALL 4

SCALE: 3"=1'-0"

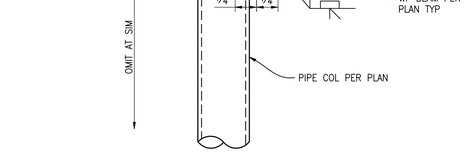

NOTES:
1. WOOD FRAMING NOT SHOWN FOR CLARITY
2. REF 2/S5.2 FOR CALLOUTS IN COMMON

MOMENT CONN AT WF BEAM 5

SCALE: 3"=1'-0"

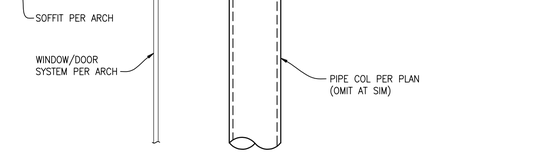

NOTE:
REF 2/S5.2 & 3/S5.2 FOR CALLOUTS IN COMMON

PIPE COLUMNS AT WF / WINDOW 6

SCALE: 3"=1'-0"

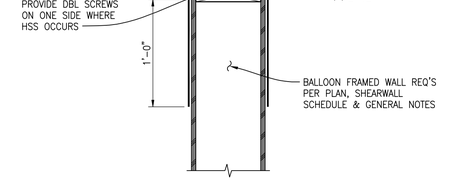

NOTE:
REF 4/S5.2 FOR CALLOUTS IN COMMON

WF BEAM AT BALLOON FRAMED WALL 7

SCALE: 1½"=1'-0"

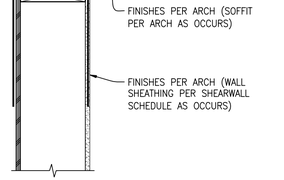

NOTE:
REF 4/S5.2 & 7/S5.2 FOR CALLOUTS IN COMMON

WF BEAM AT BALLOON FRAMED WALL 8

SCALE: 1½"=1'-0"

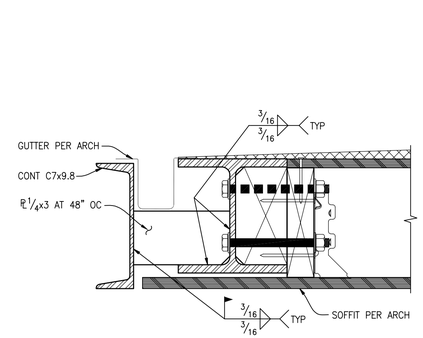

NOTES:
1. REF 3/S5.2 FOR CALLOUTS IN COMMON
2. FRAMING PARALLEL AS OCCURS
3. WATERPROOFING PER ARCH TYP

ROOF GUTTER AT WF FASCIA BEAM 9

SCALE: 3"=1'-0"

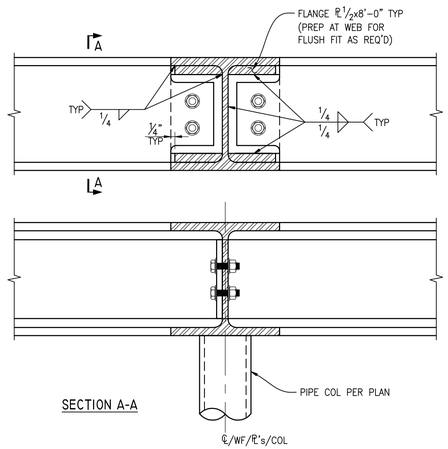

NOTE:
REF 5/S5.2 FOR CALLOUTS IN COMMON

PLATE STRENGTHENING AT WF MOMENT CONN 10

SCALE: 3"=1'-0"

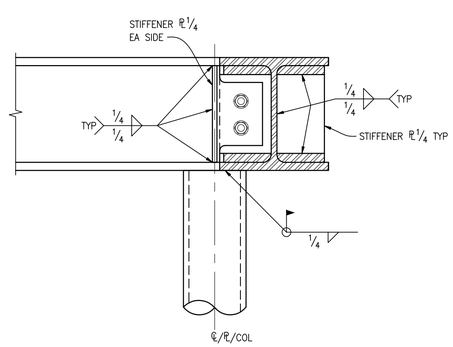

NOTE:
REF 5/S5.2 & 10/S5.2 FOR CALLOUTS IN COMMON

PLATE STRENGTHENING AT WF MOMENT CONN 11

SCALE: 3"=1'-0"

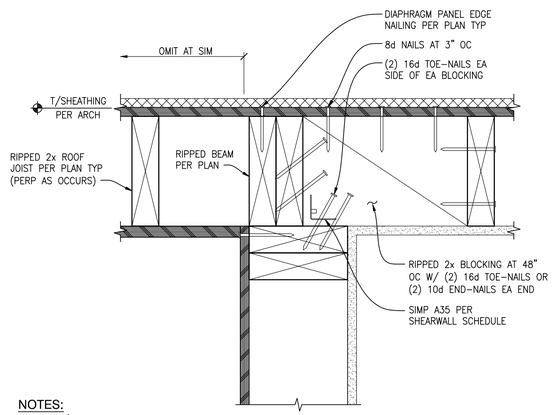

NOTES:
1. REF 4/S5.2 FOR CALLOUTS IN COMMON
2. OMIT SHEARWALL REFERENCES AT SIM

WOOD BEAM AT EXTERIOR WALL 12

SCALE: 3"=1'-0"

THESE DRAWINGS ARE THE ORIGINAL UNPUBLISHED WORK OF MODERN HOUSE AND MAY NOT BE USED OR DISCLOSED WITHOUT THE WRITTEN PERMISSION OF THE ARCHITECT.
© MODERN HOUSE

MODERN HOUSE
ARCHITECTURE & DESIGN
1265 Indiana St.
San Francisco Ca. 94107
P. 415.800.8520
C. 415.596.7281
modernhouse@mac.com
www.modernhousearchitects.com

REGISTERED PROFESSIONAL ENGINEER JEFFREY S. FITCH C64889 Exp. 06/30/21 CIVIL STATE OF CALIFORNIA

Curt Cline Architect

sfa
SFA Design Group, LLC
STRUCTURAL | CIVIL | GEOTECHNICAL | LAND USE PLANNING
9020 SW Washington Square Dr., Suite 505
Portland, Oregon 97223
1813 Rutan Dr., Suite C, Livermore, CA 94551
1912 S 146th St., Seattle, WA 98168
p: 503.641.8311 www.sfadg.com

BUILDING PERMIT REVIEW
029-35-005
PANGAN RESIDENCE
AUGUSTA CT
MILPITAS, CA

Revisions:

1	12.21.2018
2	11.24.2020

FRAMING DETAILS

PROJECT : 17-079

DATE : 04.25.2018

SHEET : S5.2

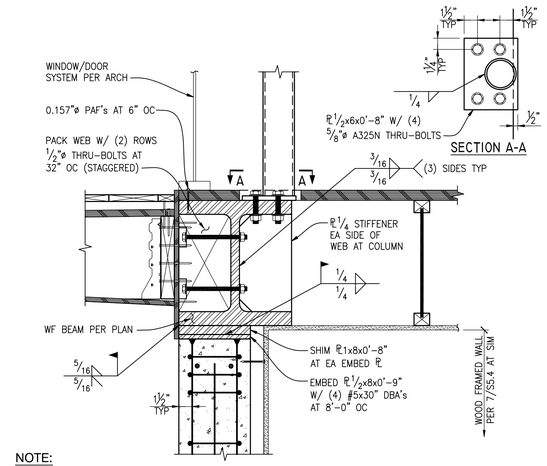

NOTE:
REF 5/S5.3, 8/S5.3 & 7/S5.4 FOR CALLOUTS IN COMMON

DECK FRAMING AT RETAINING WALL

SCALE: 1 1/2"=1'-0" — 1

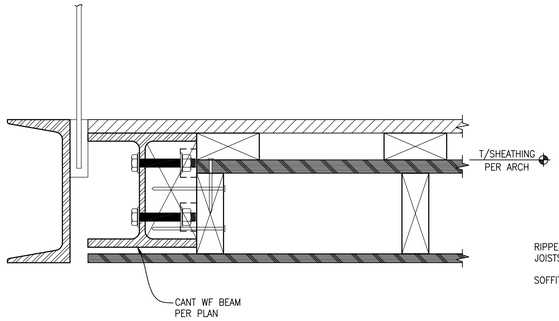

NOTE:
REF 3/S5.2 & 7/S5.3 FOR CALLOUTS IN COMMON

DECK FASCIA AT CANT WF BEAM

SCALE: 3"=1'-0" — 2

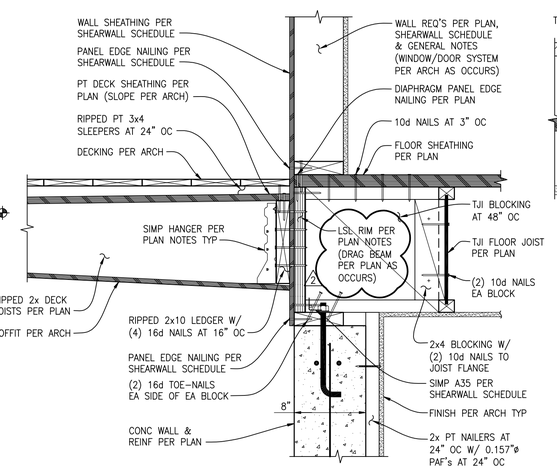

WOOD FRAMING AT DECK TRANSITION

SCALE: 1 1/2"=1'-0" — 3

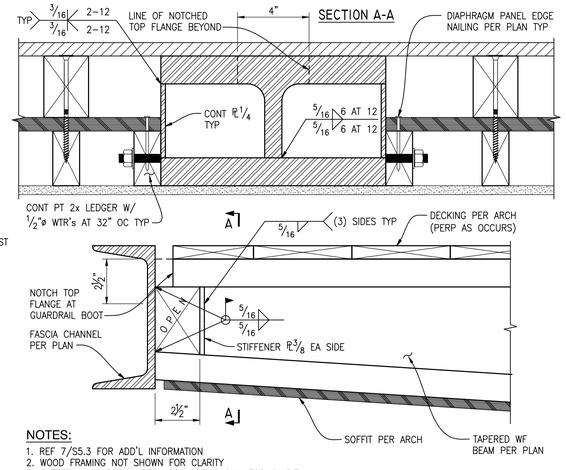

NOTES:
1. REF 7/S5.3 FOR ADD'L INFORMATION
2. WOOD FRAMING NOT SHOWN FOR CLARITY
3. GUTTER & GUARDRAIL PER ARCH NOT SHOWN FOR CLARITY

DECK FASCIA AT WF BEAM

SCALE: 3"=1'-0" — 4

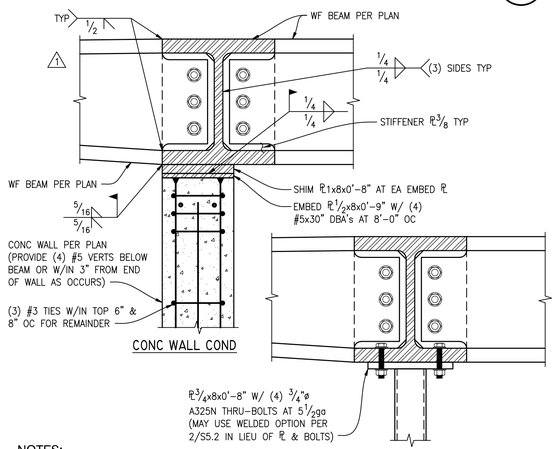

NOTES:
1. WOOD FRAMING NOT SHOWN FOR CLARITY
2. REF 10/S5.1 FOR CALLOUTS IN COMMON
3. DIAGONAL BEAM NOT SHOWN FOR CLARITY (REF 10/S5.4)

MOMENT CONNECTION AT WF BEAMS

SCALE: 1 1/2"=1'-0" — 5

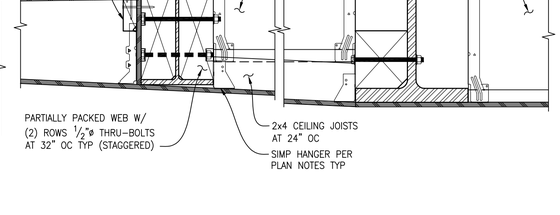

NOTE:
REF 8/S5.1 & 3/S5.3 FOR CALLOUTS IN COMMON

SHEARWALL AT CANT DECK

SCALE: 1 1/2"=1'-0" — 6

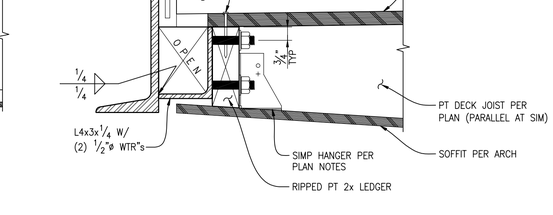

NOTE:
1. REF 4/S5.3 FOR ADD'L INFORMATION
2. GUTTER PER ARCH NOT SHOWN FOR CLARITY

DECK FASCIA AT DECK FRAMING

SCALE: 3"=1'-0" — 7

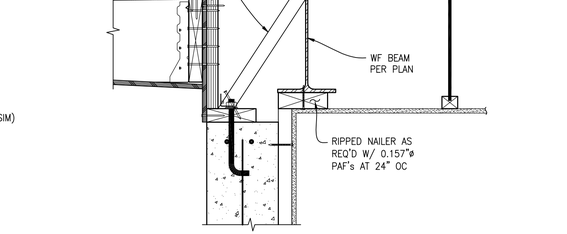

NOTE:
REF 3/S5.3 FOR CALLOUTS IN COMMON

DECK FRAMING AT RETAINING WALL

SCALE: 1 1/2"=1'-0" — 8

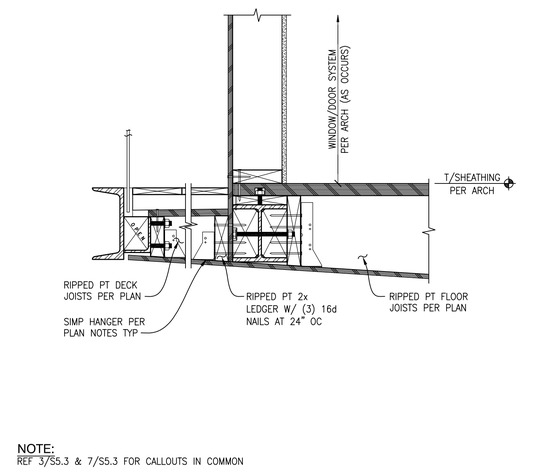

NOTE:
REF 3/S5.3 & 7/S5.3 FOR CALLOUTS IN COMMON

DECK FASCIA AT DECK FRAMING

SCALE: 1 1/2"=1'-0" — 9

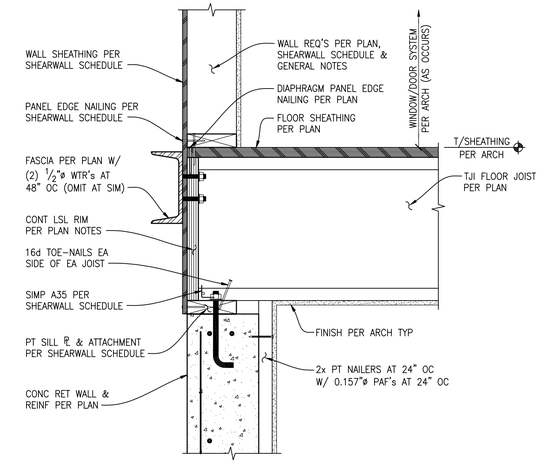

PERP FLOOR FRAMING AT EXT WALL/RET WALL

SCALE: 1 1/2"=1'-0" — 10

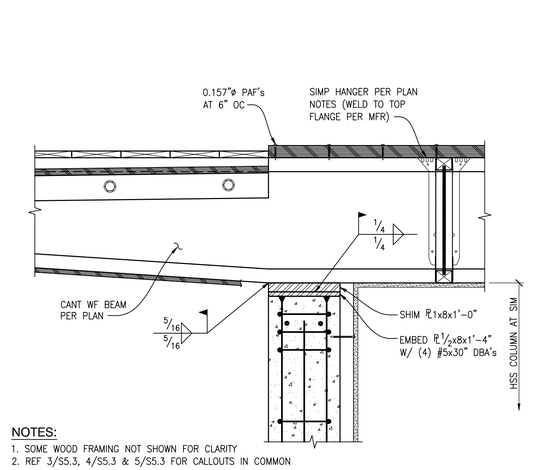

NOTES:
1. SOME WOOD FRAMING NOT SHOWN FOR CLARITY
2. REF 3/S5.3, 4/S5.3 & 5/S5.3 FOR CALLOUTS IN COMMON

CANT WF BEAM AT CONC WALL

SCALE: 1 1/2"=1'-0" — 11

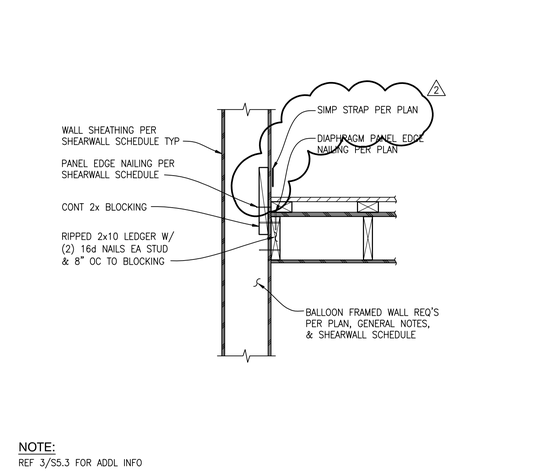

NOTE:
REF 3/S5.3 FOR ADDL INFO

BALLOON FRAMED WALL AT DECK FRAMING

SCALE: 1"=1'-0" — 12

THESE DRAWINGS ARE THE ORIGINAL UNPUBLISHED WORK OF THE MODERN HOUSE AND MAY NOT BE USED OR REPRODUCED WITHOUT THE WRITTEN PERMISSION OF THE ARCHITECT.
© MODERN HOUSE

MODERN HOUSE
ARCHITECTURE & DESIGN
1265 Indiana St.
San Francisco Ca. 94107
P. 415.800.8520
C. 415.596.7281
modernhouse@mac.com
www.modernhousearchitects.com

REGISTERED PROFESSIONAL ENGINEER — JEFFREY S. FITCH — C64889 — Exp. 06/30/21 — CIVIL — STATE OF CALIFORNIA

Curt Cline Architect
SFA Design Group, LLC
STRUCTURAL | CIVIL | GEOTECHNICAL | LAND USE PLANNING
9020 SW Washington Square Dr., Suite 505
Portland, Oregon 97223
1813 Rutan Dr., Suite C, Livermore, CA 94551
1912 S 146th St., Seattle, WA 98168
p: 503.641.8311 www.sfadg.com

BUILDING PERMIT REVIEW
029-35-005
PANGAN RESIDENCE
AUGUSTA CT
MILPITAS, CA

Revisions:

1	12.21.2018
2	11.24.2020

FRAMING DETAILS

PROJECT : 17-079

DATE : 04.25.2018

SHEET : **S5.3**

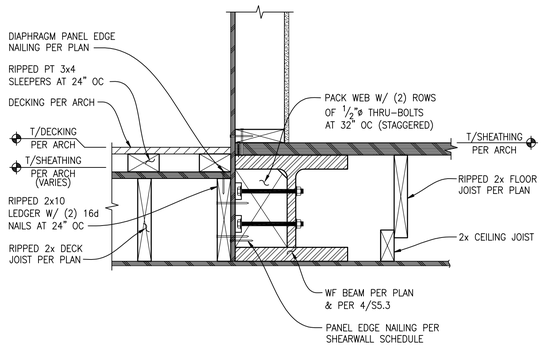

NOTES:
1. REF 3/S5.3 FOR CALLOUTS IN COMMON
2. REF 3/S5.3 & 4/S5.3 FOR ADDL INFORMATION

DECK FRAMING AT FLOOR FRAMING

SCALE: 1 1/2"=1'-0" — 1

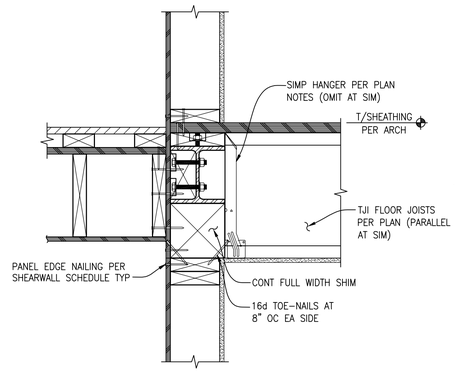

NOTES:
1. REF 12/S5.3 & 7/S5.4 FOR CALLOUTS IN COMMON
2. REF 3/S5.3 FOR ADDL INFO & CALLOUTS IN COMMON AT SIM
3. DECK FRAMING PERP AT SIM

FLOOR FRAMING AT DECK FRAMING

SCALE: 1 1/2"=1'-0" — 2

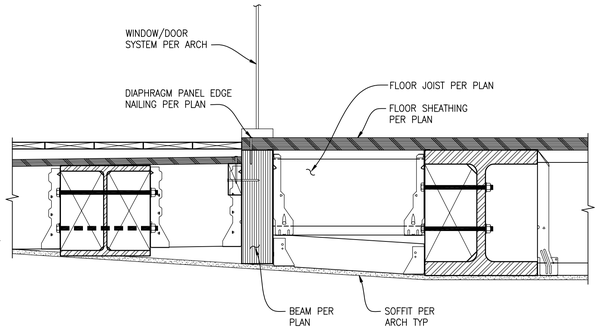

NOTE:
REF 6/S5.3 FOR CALLOUTS IN COMMON

FLOOR / DECK FRAMING TRANSITION

SCALE: 1 1/2"=1'-0" — 3

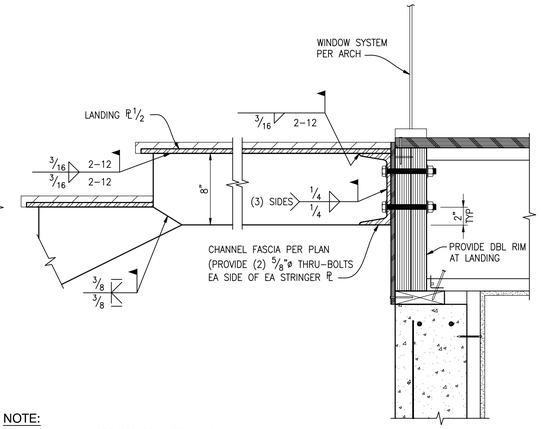

NOTE:
REF 11/S4.1 & 10/S5.3 FOR CALLOUTS IN COMMON

ENTRY LANDING FRAMING

SCALE: 1 1/2"=1'-0" — 4

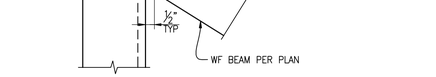

PLAN VIEW

NOTES:
1. DECK FRAMING NOT SHOWN FOR CLARITY
2. REF 1/S5.2 FOR CALLOUTS IN COMMON

CHANNEL FASCIA AT CORNER

SCALE: 3"=1'-0" — 5

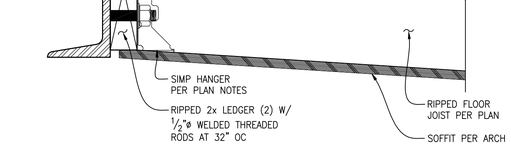

FLOOR FRAMING AT CHANNEL FASCIA

SCALE: 3"=1'-0" — 6

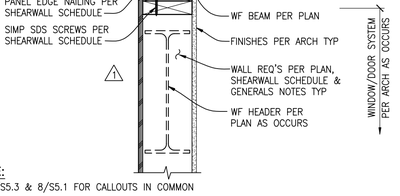

NOTE:
REF 3/S5.3 & 8/S5.1 FOR CALLOUTS IN COMMON

FLOOR FRAMING AT EXTERIOR WALL

SCALE: 1 1/2"=1'-0" — 7

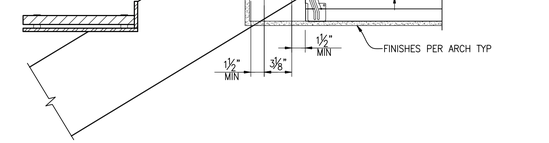

NOTE:
REF 12/S4.1 FOR CALLOUTS IN COMMON

INTERIOR STAIR AT FLOOR

SCALE: 1 1/2"=1'-0" — 8

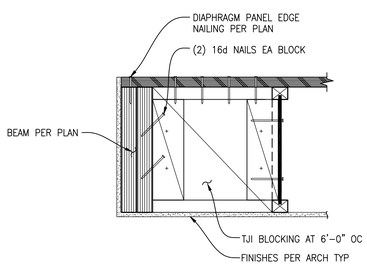

NOTES:
1. REF 3/S5.3 FOR CALLOUTS IN COMMON
2. GLASS WALL PER ARCH NOT SHOWN FOR CLARITY

FLOOR FRAMING AT STAIR OPENING

SCALE: 1 1/2"=1'-0" — 9

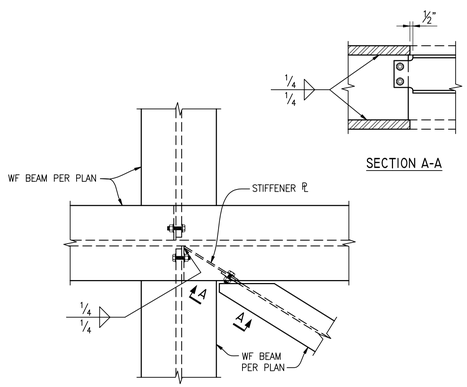

PLAN VIEW

NOTES:
1. REF 1/S5.2 FOR CALLOUTS IN COMMON
2. REF 5/S5.3 FOR ADDL INFO

DIAGONAL WF BEAM AT MOMENT CONNECTION

SCALE: 1"=1'-0" — 10

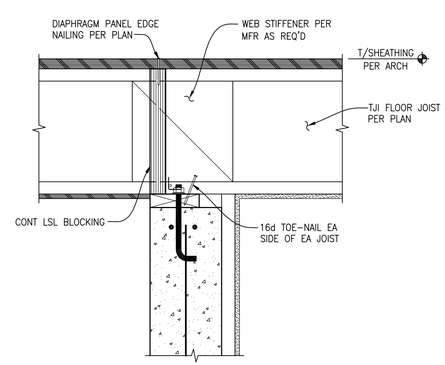

NOTE:
REF 3/S5.3 FOR CALLOUTS IN COMMON

FLOOR FRAMING AT CONCRETE WALL

SCALE: 1 1/2"=1'-0" — 11

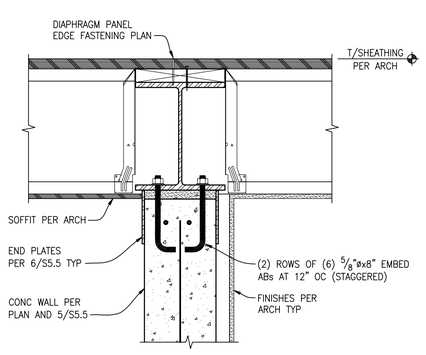

NOTE:
REF 8/S5.1 AND 3/S5.3 FOR CALLOUTS IN COMMON

FLOOR FRAMING AT WF BEAM/SHEARWALL

SCALE: 1 1/2"=1'-0" — 12

THESE DRAWINGS ARE THE ORIGINAL UNPUBLISHED WORK OF THE MODERN HOUSE AND MAY NOT BE USED OR REVISED WITHOUT THE WRITTEN PERMISSION OF THE ARCHITECT.
© MODERN HOUSE

MODERN HOUSE
ARCHITECTURE & DESIGN
1265 Indiana St.
San Francisco Ca. 94107
P. 415.800.8520
C. 415.596.7281
modernhouse@mac.com
www.modernhousearchitects.com

REGISTERED PROFESSIONAL ENGINEER JEFFREY S. FITCH C64889 Exp. 06/30/21 CIVIL STATE OF CALIFORNIA

Curt Cline Architect

SFA Design Group, LLC
STRUCTURAL | CIVIL | GEOTECHNICAL | LAND USE PLANNING
9020 SW Washington Square Dr., Suite 505
Portland, Oregon 97223
1813 Rutan Dr., Suite C, Livermore, CA 94551
1912 S 146th St., Seattle, WA 98168
p: 503.641.8311 www.sfadg.com

BUILDING PERMIT REVIEW

029-35-005

PANGAN RESIDENCE

AUGUSTA CT
MILPITAS, CA

Revisions:

1	12.21.2018
2	11.24.2020

FRAMING DETAILS

PROJECT : 17-079

DATE : 04.25.2018

SHEET : S5.4

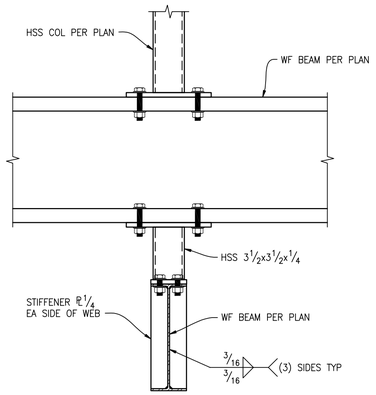

NOTE:
REF 2/S5.2 & 5/S5.3 FOR CALLOUTS IN COMMON

CANT WF BEAM AT GARAGE HEADER

SCALE: 1½"=1'-0" — 1

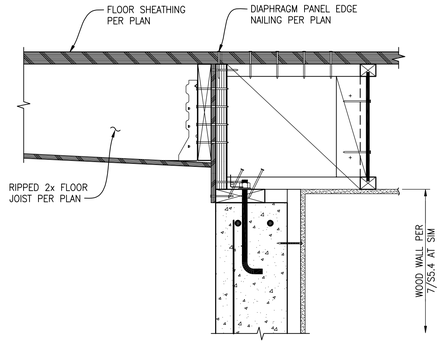

NOTE:
REF 3/S5.3 FOR CALLOUTS IN COMMON

FLOOR FRAMING AT EXTERIOR WALL

SCALE: 1½"=1'-0" — 2

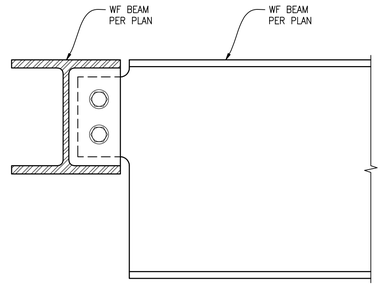

NOTES:
1. REF 1/S5.2 FOR CALLOUTS IN COMMON
2. WOOD FRAMING NOT SHOWN FOR CLARITY
3. DIAGONAL WF BEAM NOT SHOWN FOR CLARITY AT SIM (REF 10/S5.4 FOR ADD'L INFORMATION)

W12 BEAM AT W6 BEAM

SCALE: 3"=1'-0" — 3

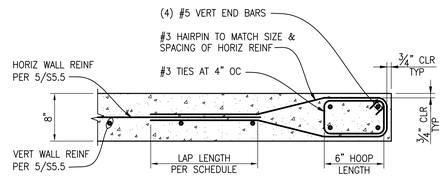

CONC SHEARWALL BOUNDARY REINFORCING

SCALE: 1"=1'-0" — 2 / 4

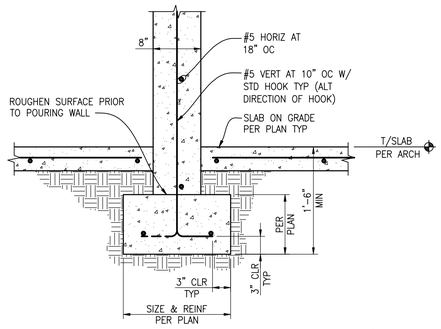

CONC SHEARWALL AT FOOTING

SCALE: 1"=1'-0" — 2 / 5

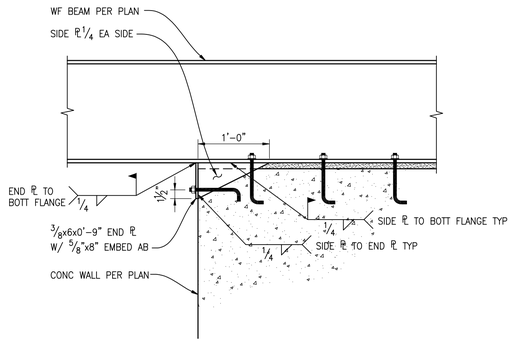

NOTE:
WOOD FRAMING AND CONC REINF NOT SHOWN FOR CLARITY

WF BEAM AT CONC SHEARWALL ENDS

SCALE: 1"=1'-0" — 2 / 6

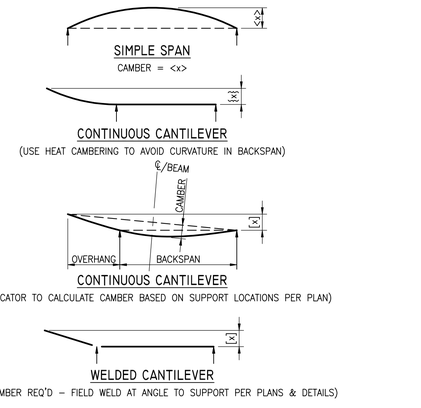

NOTES:
1. ARROWS INDICATE SUPPORT POINTS
2. 'x' INDICATES ELEVATION RELATIVE TO STRAIGHT LINE DRAWN BETWEEN SUPPORT POINTS (POSITIVE IS UPWARDS)
3. FABRICATOR TO VERIFY CAMBERS PER AISC QC PROCEDURES AND CODE OF STD PRACTICE PRIOR TO DELIVERY
4. CONTRACTOR TO VERIFY ELEVATIONS AFTER ERECTION PRIOR TO ADDING FRAMING

TYPICAL CAMBER DETAIL

SCALE: NONE — 2 / 7

THESE DRAWINGS ARE THE ORIGINAL, UNPUBLISHED WORK OF THE MODERN HOUSE AND MAY NOT BE USED OR REPRODUCED WITHOUT THE WRITTEN PERMISSION OF THE ARCHITECT.
© MODERN HOUSE

MODERN HOUSE
ARCHITECTURE & DESIGN
1265 Indiana St.
San Francisco Ca. 94107
P. 415.800.8520
C. 415.596.7281
modernhouse@mac.com
www.modernhousearchitects.com

REGISTERED PROFESSIONAL ENGINEER JEFFREY S. FITCH C64889 Exp. 06/30/21 CIVIL STATE OF CALIFORNIA

Curt Cline Architect

sfa
SFA Design Group, LLC
STRUCTURAL | CIVIL | GEOTECHNICAL | LAND USE PLANNING
9020 SW Washington Square Dr., Suite 505
Portland, Oregon 97223
1813 Rutan Dr., Suite C, Livermore, CA 94551
1912 S 146th St., Seattle, WA 98168
p: 503.641.8311 www.sfadg.com

BUILDING PERMIT REVIEW
029-35-005
PANGAN RESIDENCE
AUGUSTA CT
MILPITAS, CA

Revisions:

1	12.21.2018
2	11.24.2020

FRAMING DETAILS

PROJECT : 17-079

DATE : 04.25.2018

SHEET : S5.5