SITE PLAN: 1/16"=1'0"

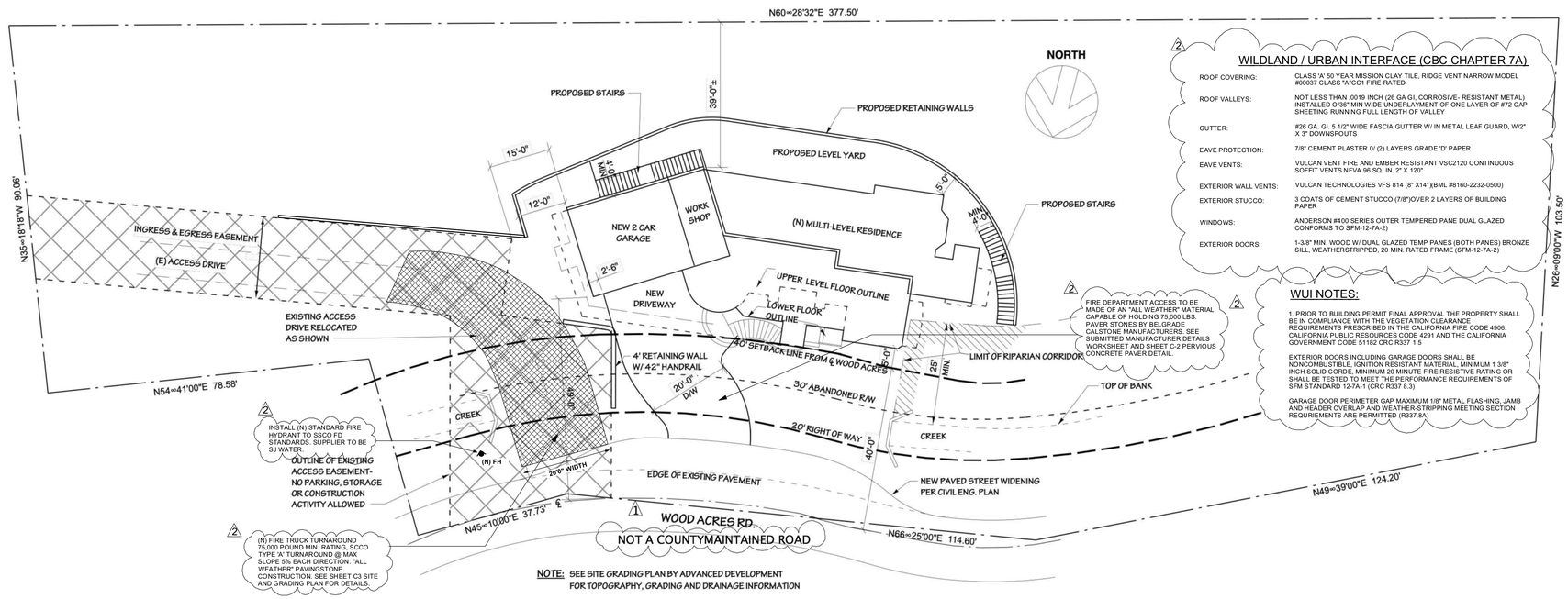

2 INSTALL (N) STANDARD FIRE HYDRANT TO SSCO FD STANDARDS. SUPPLIER TO BE SJ WATER.

OUTLINE OF EXISTING ACCESS EASEMENT- NO PARKING, STORAGE OR CONSTRUCTION ACTIVITY ALLOWED

2 (N) FIRE TRUCK TURNAROUND 75,000 POUND MIN. RATING, SCCO TYPE 'A' TURNAROUND @ MAX SLOPE 5% EACH DIRECTION. "ALL WEATHER" PAVINGSTONE CONSTRUCTION. SEE SHEET C3 SITE AND GRADING PLAN FOR DETAILS.

2 WILDLAND / URBAN INTERFACE (CBC CHAPTER 7A)

ROOF COVERING:	CLASS 'A' 50 YEAR MISSION CLAY TILE, RIDGE VENT NARROW MODEL #00037 CLASS "A"CC1 FIRE RATED
ROOF VALLEYS:	NOT LESS THAN .0019 INCH (26 GA GI, CORROSIVE- RESISTANT METAL) INSTALLED O/30" MIN WIDE UNDERLAYMENT OF ONE LAYER OF #72 CAP SHEETING RUNNING FULL LENGTH OF VALLEY
GUTTER:	#26 GA. GI. 5 1/2" WIDE FASCIA GUTTER W/ IN METAL LEAF GUARD, W/2" X 3" DOWNSPOUTS
EAVE PROTECTION:	7/8" CEMENT PLASTER O/ (2) LAYERS GRADE 'D' PAPER
EAVE VENTS:	VULCAN VENT FIRE AND EMBER RESISTANT VSC2120 CONTINUOUS SOFFIT VENTS NFVA 96 SQ. IN. 2"X 120"
EXTERIOR WALL VENTS:	VULCAN TECHNOLOGIES VFS 814 (8" X14")(BML #8160-2232-0500)
EXTERIOR STUCCO:	3 COATS OF CEMENT STUCCO (7/8")OVER 2 LAYERS OF BUILDING PAPER
WINDOWS:	ANDERSON #400 SERIES OUTER TEMPERED PANE DUAL GLAZED CONFORMS TO SFM-12-7A-2)
EXTERIOR DOORS:	1-3/8" MIN. WOOD W/ DUAL GLAZED TEMP PANES (BOTH PANES) BRONZE SILL, WEATHERSTRIPPED, 20 MIN. RATED FRAME (SFM-12-7A-2)

2 FIRE DEPARTMENT ACCESS TO BE MADE OF AN "ALL WEATHER" MATERIAL CAPABLE OF HOLDING 75,000 LBS. PAVER STONES BY BELGRADE CALSTONE MANUFACTURERS. SEE SUBMITTED MANUFACTURER DETAILS WORKSHEET AND SHEET C-2 PERVIOUS CONCRETE PAVER DETAIL.

2 WUI NOTES:

1. PRIOR TO BUILDING PERMIT FINAL APPROVAL THE PROPERTY SHALL BE IN COMPLIANCE WITH THE VEGETATION CLEARANCE REQUIREMENTS PRESCRIBED IN THE CALIFORNIA FIRE CODE 4906. CALIFORNIA PUBLIC RESOURCES CODE 4291 AND THE CALIFORNIA GOVERNMENT CODE 51182 CRC R337 1.5

EXTERIOR DOORS INCLUDING GARAGE DOORS SHALL BE NONCOMBUSTIBLE, IGNITION RESISTANT MATERIAL, MINIMUM 1 3/8" INCH SOLID CORDE, MINIMUM 20 MINUTE FIRE RESISTIVE RATING OR SHALL BE TESTED TO MEET THE PERFORMANCE REQUIREMENTS OF SFM STANDARD 12-7A-1 (CRC R337 8.3)

GARAGE DOOR PERIMETER GAP MAXIMUM 1/8" METAL FLASHING, JAMB AND HEADER OVERLAP AND WEATHER-STRIPPING MEETING SECTION REQUIREMENTS ARE PERMITTED (R337.8A)

1 DEFERRED SUBMITTALS

1. ROOF TRUSS PLAN AND CACULATIONS TO BE PROVIDED BY STRUCTURE ENGINEER. APPROVAL WILL BE A DEFERRED SUBMITTAL.

2 2. AN APPROVED AUTOMATIC FIRE SPRINKLER SYSTEM (NFPA 13D MINIMUM) SHALL BE PROVIDED FOR THE HOME AND GARAGE AREA. FIRE SPRINKLER PERMIT APPROVAL WILL BE A DEFERRED SUBMITTAL

3. SOLAR PV PANELS PLANS AND CACULATIONS TO MEET REQUIRMENTS OF T24 AND CF1R PAGE 2. SOLAR PANEL PERMIT WILL BE A DEFFERED SUBMITTAL.

2 4. (N) STANDARD FIRE HYDRANT TO MEET COUNTY FIRE DEPARMENT REQUIREMENTS

1 T24 & HERS REQUIREMENTS

TITLE 24 REQUIRED SPECIAL FEATURES-
* INDOOR AIR QUALITY, BALANCED FAN
*NON-STANDARD DUCT LOCATION (ANY LOCATION OTHER THAN ATTIC)

HERS FEATURE SUMMARY-
THE FOLLOWING IS A SUMMARY OF THE FEATURES THAT MUST BE FIELD VERIFIED BY A CERTIFIED HERS RATER AS A CONDITION FOR MEETING THE MODELED ENERGY PERFORMANCE FOR THIS COMPUTER ANALYSIS.
BUILDING LEVEL VERIFICATION
* QUALITY INSULATION INSTALLATION (QII)
* INDOOR AIR QUALITY VENTILATION
*KITCHEN RANGE HOOD
COOLING SYSTEM VERIFICATIONS:
*MINIMUM AIRFLOW
*FAN EFFICACY WATTS/CFM
HEATING SYSTEMS VERIFICATION:
*VERIFIED HEAT PUMP RATED HEATING CAPACITY
HVAC DISTRIBUTION SYSTEM VERIFICATIONS:
*DUCT LEAKAGE TESTING
*DUCTS LOCATED ENTIRELY IN CONDITIONED SPACE CONFIRMED BY DUCT LEAKAGE TESTING
DOMESTIC HOW WATER SYSTEM VERIFICATIONS:
*NONE

PROJECT INFORMATION

PROJECT ADDRESS:	16190 WOOD ACRES ROAD LOS GATOS CA 95030
JURISDICTION:	COUNTY OF SANTA CLARA
APN:	510-53-015
OWNER CONTACT:	MARGARET PHAM. PHONE NUMBER: (408)642-9108) EMAIL: MARGARET.PHAM@ELITERM.COM
ZONING:	HR-d1
BUILDING USE:	R3/U
CONSTRUCTION TYPE:	TYPE V-B
SCOPE OF WORK:	NEW 5000 SF SINGLE FAMILY RESIDENCE. CONSISTING OF THE FOLLOWING: 1 MASTER BEDROOM, 1 MASTER BATHROOM, 3 BEDROOMS,3 BATHROOMS, WET BAR, 2 LAUNDRY ROOMS, EXERCISE ROOM, 2 CAR GARAGE, MEDIA ROOM, KITCHEN, PANTRY, NOOK, DINING ROOM, 1 POWDER ROOM, GREAT ROOM, STUDY ALCOVE AND LIBRARY
LOT AREA:	42,233.43 SF
BUILDING FLOOR AREAS:	BASEMENT FLOOR: 879 SF, 1st STORY FLOOR: 2,423.71 SF, 2nd STORY FLOOR INCLUDING DOUBLE HEIGHT: 2145 SF, BALCONY (2):88 SF, GARAGE+ SHOP: 745.0 SF, TERRACE: 423 SF, TOTAL BUILDING FLOOR AREA= 6,658SF
TOTAL LIVEABLE FLOOR AREA:	5,000 SF
FLOOR AREA RATIO (FAR):	TOTAL BUILDING FLOOR AREA/ LOT AREA= FAR. (6,667/ 42,233.43)= 15.8%
TOP OF RIDGE HEIGHT:	31'3"
SETBACKS:	FRONT SETBACK: 40'0" REAR SETBACK: 39'0"
SEPTIC/SEWER:	SEWER
FIRE SPRINKLER:	AN APPROVED AUTOMATIC FIRE SPRINKLER SYSTEM (NFPA 13D MINIMUM) SHALL BE PROVIDED FOR THE HOME AND GARAGE AREA. FIRE SPRINKLER PERMIT APPROVAL WILL BE A DEFERRED SUBMITTAL

CONSULTANTS

OWNER/ DESIGNER/ MAIN CONTACT:
MARGARET PHAM
ELITE HOME DEVELOPMENT
2787 MOORPARK AVE
SAN JOSE CA 95128
TELEPHONE (408) 813-8760

STRUCTURE ENGINEER:
GEOTRINITY CONSULTANTS INC.
7770 PARDEE LANE, SUITE 101
OAKLAND CA 94621
TELEPHONE (510) 383-9950

CIVIL ENGINEER:
ADVANCED DEVELOPMENT
2933 BENJAMIN COURT
SAN JOSE CA 95124
TELEPHONE (408) 376-0570

GEOTECHNICAL ENGINEER:
AMERICAN SOIL TESTING INC.
2734 SOUTH BASCOM AVENUE
SAN JOSE, CALIFORNIA 95124
TELEPHONE: (408)559-6400

T24:
CARSTAIRS ENERGY
2238 BAYVIEW HEIGHTS DRIVE, SUITE E
LOS OSOS, CALIFORNIA 93402
TELEPHONE (805) 904-9048

2 # APPLICABLE CODES

2019 CALIFORNIA BUILDING CODE
2019 CALIFORNIA RESIDENTIAL CODE
2019 CALIFORNIA MECHANICAL CODE
2019 CALIFORNIA ELECTRICAL CODE
2019 CALIFONRIA PLUMBING CODE
2019 ENERGY CODE
2019 CALIFORNIA GREEN BUILDING CODE
2019 CALIFORNIA FIRE CODE
2019 CALIFORNIA REFERENCE CODE
WILDLAND / URBAN INTERFACE (CBC CHAPTER 7A)
COUNTY OF SANTA CLARA CODE

VICINITY MAP

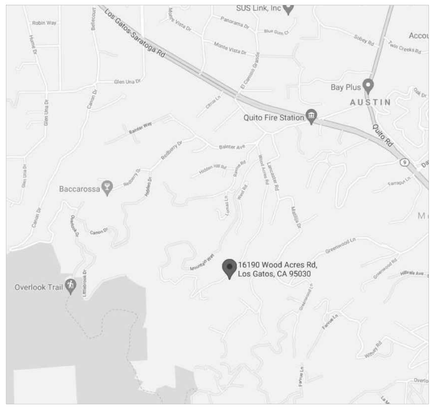

PARCEL MAP

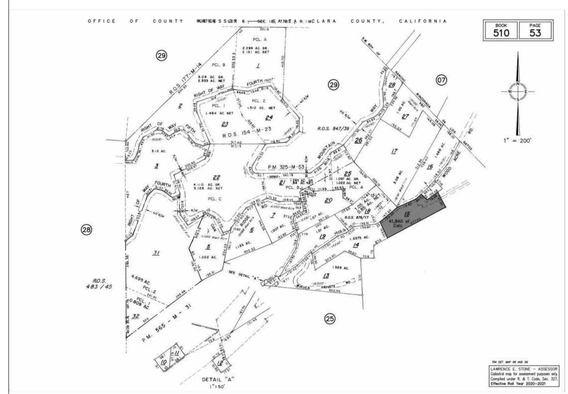

SHEET INDEX

A 1.0	COVER SHEET / SITE PLAN	C1	TITLE SHEET
A 2.0	AREA DIAGRAM CALC.	C2	RECORD BOUNDARY AND DETAILS
A 3.0	BASEMENT FLOOR PLAN	C3	PROPOSED GRADING AND DRAINAGE PLAN
A 4.0	FIRST FLOOR PLAN	C4	EROSION CONTROL PLAN
A 5.0	SECOND FLOOR PLAN	C5-6	EROSION CONTROL BMP'S
A 6.0	FIRST FLOOR ROOF PLAN	C7	TRAFFIC CONTROL PLAN
A 6.1	SECOND FLOOR ROOF PLAN	C8	LANDSCAPE PLAN
A 7.0	FRONT AND REAR ELEVATIONS		
A 8.0	SIDE ELEVATIONS		
A 9.0	ARCHITECTURAL SECTIONS	S 0	STRUCTURAL NOTES AND TYPICAL DETAILS
A 10.0	BASEMENT ELECTRICAL FLOOR PLAN	S 1.1	FOUNDATION PLAN AND DETAILS
A 11.0	FIRST FLOOR ELECTRICAL FLOOR PLAN	S 1.2	FIRST FLOOR FRAMING PLAN AND DETAILS
A 12.0	SECOND FLOOR ELECTRICAL FLOOR PLAN	S 1.3	SECOND FLOOR FRAMING PLAN AND DETAILS
1 T.24-1	TITLE 24	S 1.4	ROOF FRAMING PLAN AND DETAILS
CG-1	2019 CALGREEN RESIDENTIAL CHECKLIST (MANDATORY+TIER 1)	S 2.1	STRUCTURAL DETAILS
CG-2	CONSTRUCTION WASTE MANAGEMENT PLAN (CWM) PLAN	S 2.2	STRUCTURAL DETAILS
CG-3	CALGREEN 2019 NOTES- MANDATORY REQUIREMENTS	S 2.3	STRUCTURAL DETAILS
CG-4	CALGREEN 2019 NOTES- MANDATORY REQUIREMENTS	S 2.4	STRUCTURAL DETAILS
		S 2.5	STRUCTURAL DETAILS
		S 2.6	STRUCTURAL DETAILS
L-1.1	LANDSCAPE MATERIALS LAYOUT PLAN AND DOCUMENTATION PACKAGE COVER	S 2.7	STRUCTURAL DETAILS
L-1.2	TREE REMOVAL, REPLACEMENT, AND PROTECTION PLAN, SCREENING PLAN		
L-2.1	PLANTING PLAN		
L-2.2	LANDSCAPE DETAILS		
L-3.1	IRRIGATION PLAN, HYDROZONES, AND WATER BUDGET WORKSHEET		
L-3.2	IRRIGATION DETAILS		
L-4.1	RIPARIAN HABITAT ENHANCEMENT BY COAST ECOLOGY		
L-4.2	RIPARIAN HABITAT ENHANCEMENT BY COAST ECOLOGY		
L-4.3	RIPARIAN HABITAT ENHANCEMENT BY COAST ECOLOGY		
L-4.4	NESTING RAPTOR AND BAT REPORT BY COAST ECOLOGY		

REGISTERED PROFESSIONAL ENGINEER
JIYN-RONG YANG
No. C 48655
Exp. 06/30/22
CIVIL
STATE OF CALIFORNIA

Jerry Yang, P.E.; G.E.

REVISION TABLE

NUMBER	DATE	REVISED BY	DESCRIPTION
1	06.22.22	EDS	REVISION 1
2	05.12.24	EDS	REVISION 2

ELITE DESIGN STUDIO

PHAM RESIDENCE
16190 WOOD ACRES RD
LOS GATOS CA 95030

COVER SHEET/ SITE PLAN

DATE: 7/11/22

SCALE: NO SCALE

SHEET: A 1.0

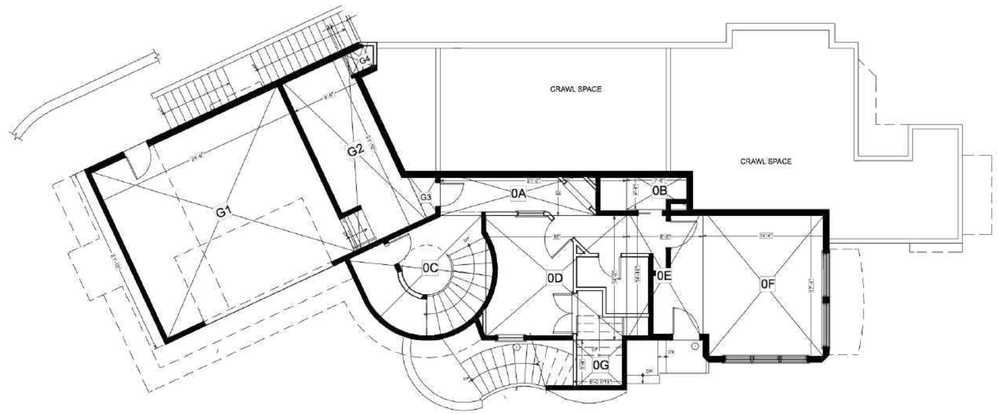

BASEMENT FLOOR – 1/8" = 1' 0"

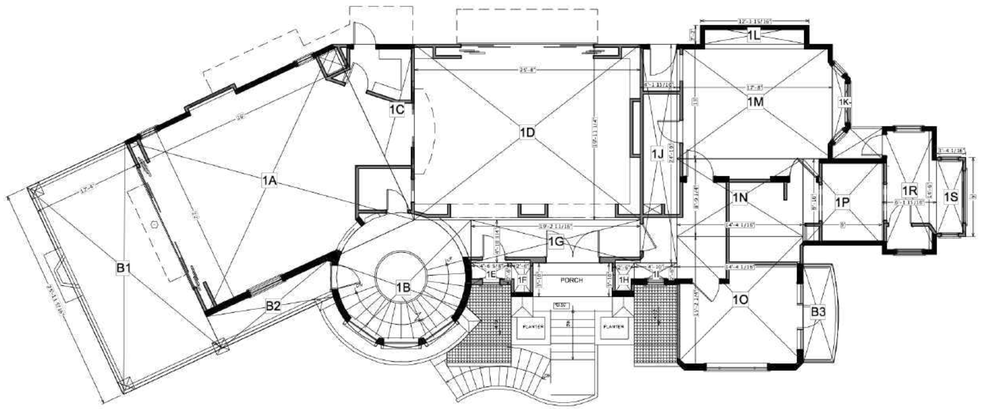

FIRST FLOOR – 1/8" = 1' 0"

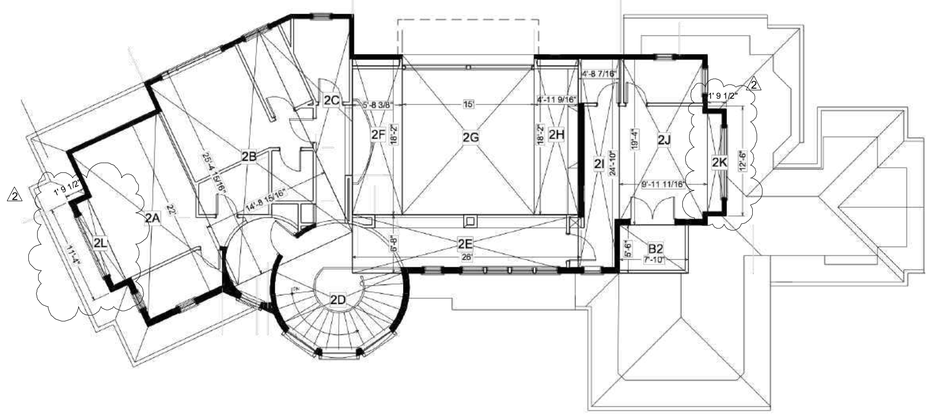

SECOND FLOOR – 1/8" = 1' 0"

BASEMENT FLOOR AREA CALCULATIONS

BASEMENT AREA–
OA– 21'2" x 5'0"= 105.83 SF
OB– 7'6" x 4'4"= 32.49 SF
OC– 170.47 SF
OD–16'0" x 14'2"= 226.66 SF
OE–8'8" x 14'10"= 128.53 SF
OF–14'4" x 17'4"= 247.88 SF
OG–6'0 7/16" x 5'8"= 34.23 SF

TOTAL BASEMENT LIVING AREA– 879 SF

GARAGE+SHOP–
G1– 24'6" x 21'10"= 534.97 SF
G2– 8'6"x 21'10"= 185.59 SF
G3= 14.60 SF
G4= 9.41 SF

GARAGE TOTAL AREA– 744.57 SF

TOTAL BASEMENT AREA +
TOTAL GARAGE & SHOP AREA= 1,623.57 SF

FIRST FLOOR AREA CALCULATIONS

1st FLOOR AREA–
1A–26'0" x 22'0"= 572 SF
1B– 183.30 SF
1C– 93.39 SF
1D– 25'8" x 19'11 1/4"= 511.76 SF
1E–4'6 5/8" x 2'6"= 11.38 SF
1F– 2'6" x 3'10"= 9.58 SF
1G–19'2 11/16" x 4'10 3/4"=94.09 SF
1H–2'6" x 3'10"= 9.58 SF
1I– 4'10" x 2'6"= 12.08 SF
1J–4'1 15/16" x 24'10"= 103.45 SF
1K– 15.49 SF
1L– 12'3 15/16" x 2'2"= 26.72 SF
1M– 17'8" x 13'0"= 229.68 SF
1N–14'4 1/16" x 8'9 3/4"= 126.30 SF
1O–14' 4 1/16" x 15'2 1/4"= 217.09 SF
1P– 9'0" x 9'10"= 88.50 SF
1R– 6'1 15/16" x 14'6"= 89.40 SF
1S–3'4 1/16" x 9'0"= 29.92 SF

1st FLOOR TOTAL LIVING FLOOR AREA– 2,423.71 SF

FIRST FLOOR TERRACE + BALCONY:

B1– 12'4" x 25' 11 5/16"= 319.90 SF
B2– 58.78 SF
B3–44 SF

TOTAL TERRACE+ BALCONY FLOOR AREA= 422.68 SF

SECOND FLOOR AREA CALCULATIONS

2nd FLOOR AREA
2A– 11'4" x22'0"= 249.37 SF
2B–14'8 15/16"x 25'4 15/16"= 362.23 SF
2C– 138.98 SF
2D–162.86 SF
2E– 26'0" x6'8"= 171.14 SF
2F–5'8 3/8" x 18'2"= 103.54 SF (DOUBLE HEIGHT NOT APPLIED TO LIVING AREA)
2G– 15'0" x 18'2"= 254.37 SF (DOUBLE HEIGHT NOT APPLIED TO LIVING AREA)
2H–4'11 9/16" x 18'2"= 90.20 SF (DOUBLE HEIGHT NOT APPLIED TO LIVING AREA)
2I– 4'8 7/16" x 24'10"= 116.81 SF
2J– 9'11 11/16" x 19'4"= 192.87 SF
2K– 1' 9 1/2" x 12' 6"= 21.79
2L– 1' 9 1/2" x 11'4"= 20.30

2nd FLOOR LIVING AREA TOTAL– 1697.35 SF

2nd FLOOR TOTAL AREA INCLUDING DOUBLE HEIGHT= 2145 SF

TOTAL SECOND FLOOR BALCONY:

B4–44 SF

TOTAL LIVEABLE AREA

TOTAL LIVEABLE AREA=

BASEMENT AREA+ FIRST FLOOR AREA+ SECOND FLOOR AREA=

879 SF + 2,423.71 SF + 1697.35 SF = 5,000 SF TOTAL LIVING AREA

FAR CALCULATIONS

FAR CALCULATION=

TOTAL BUILDING AREA/ TOTAL NET LOT AREA= FAR

TOTAL BUILDING AREA=
TOTAL BASEMENTS AREA+GARAGE & SHOP+ 1st FLORO TOTAL LIVING AREA + 1st FLOOR TERRACE & BALCONY+ 2nd FLOOR TOTAL AREA INCLUDING DOUBLE HEIGHT+ 2nd FLOOR BALCONY= 6,667 SF

TOTAL NET LOT AREA= 42,233.43 SF

PROPOSED TOTAL FLOOR AREA= 6,658 SF / 42,233.50 SF=

PROPOSED FLOOR AREA OKAY= 15.8 %

REGISTERED PROFESSIONAL ENGINEER JYH-RONG YANG No. C 48655 Exp. 06/30/22 CIVIL STATE OF CALIFORNIA

Jerry Yang, P.E.; G.E.

REVISION TABLE

NUMBER	DATE	REVISED BY	DESCRIPTION
1	06.22.22	EDS	REVISION 1
2	05.12.24	EDS	REVISION 2

ELITE DESIGN STUDIO

PHAM RESIDENCE
16190 WOOD ACRES RD
LOS GATOS CA 95030

AREA CALCULATIONS

DATE: 7/11/22

SCALE: 1/8" = 1'0"

SHEET: A 2.0

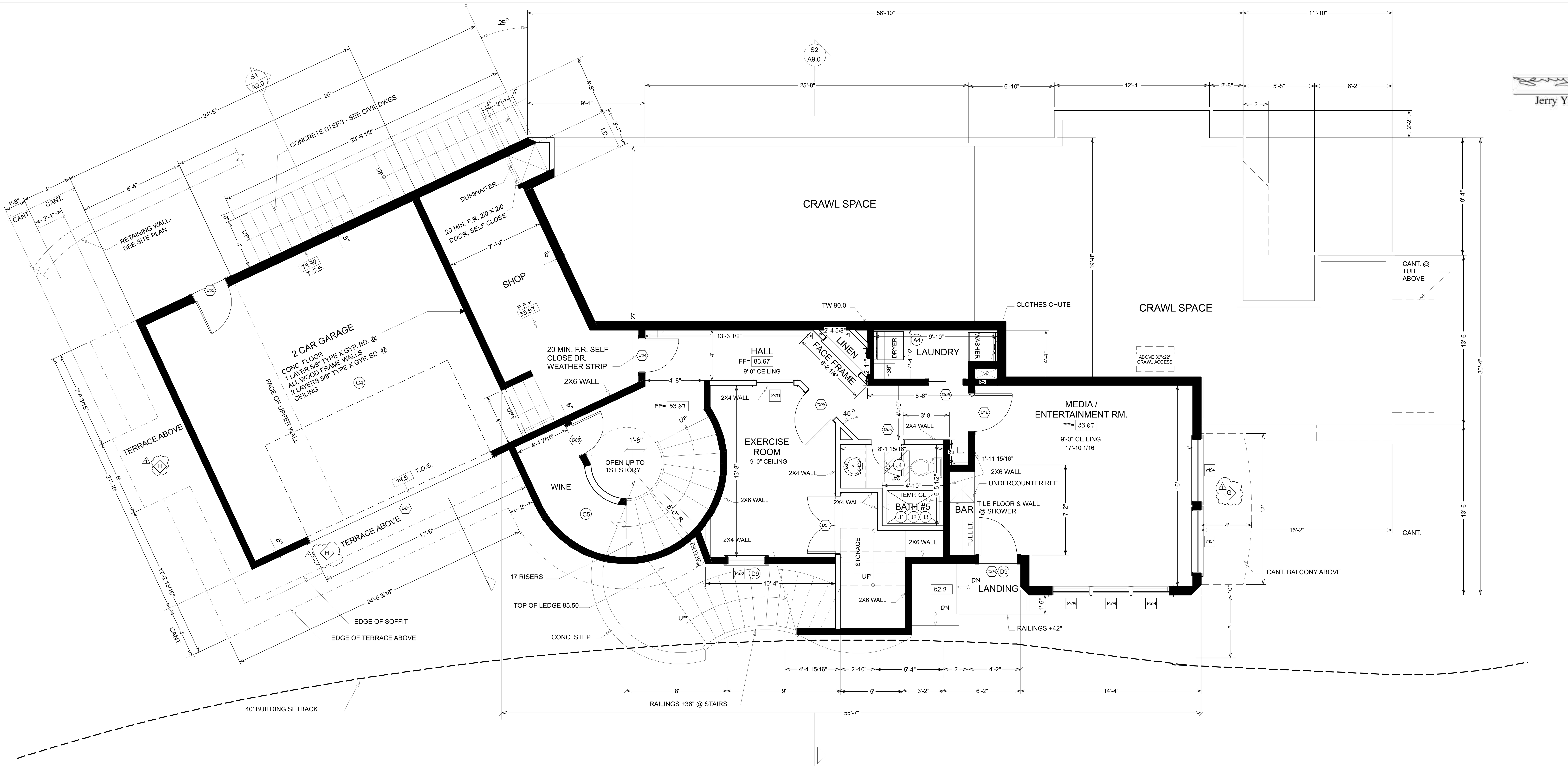

Jerry Yang, P.E.; G.E.

REVISION TABLE			
NUMBER	DATE	REVISED BY	DESCRIPTION
1	06.22.22	EDS	REVISION 1

ELITE DESIGN STUDIO

PHAM RESIDENCE
16190 WOOD ACRES RD
LOS GATOS CA 95030

BASEMENT FLOOR PLAN= 1/4" = 1'0"

LEGEND

- WOOD DECKING
- EXTERIOR TILE
- A1 BUILDING CODE NOTE
- W1 WINDOW SCHEDULE LABEL NUMBER
- D1 DOOR SCHEDULE LABEL NUMBER
- S1/A9.0 SECTION LABEL
- 2X8 WALL
- 2X6 WALL
- 2x4 WALL
- A WILD URBAN INTERFACE CALLOUT

BUILDING CODES

A. VENTILATION

1. LOCATION AND SIZE OF FOUNDATION VENTS TO CONFORM WITH 2019 CRC SECTION R 408.1 AND R 408.2
2. PROVIDE UNDER ROOF CROSS VENTILATION AT THE RATE OF 1/150 OF THE ATTIC AREA PER CRC 2019 R 806.2
3. ALL HABITABLE ROOMS SHALL HAVE AN AGGREGATE GLAZING AREA OF NOT LESS 8% OF THE FLOOR AREA, NATURAL VENTILATION SHALL BE PROVIDED WITH READY ACCESS OR SHALL OTHERWISE BE READILY CONTROLLED PER 2019 CRC R 303.1
4. PROVIDE CLOTHES DRYWER VENT TO THE OUSIDE PERM CMC 904.3.2

B.ACCESS

1. PROVIDE 22X30 ATTIC ACCESS TO FIRST FLOOR
2. EMERGENCY ESCAPE AND RESCUE OPENINGS SHALL HAVE A SILL HEIGHT OF NOT MORE THAN 44" ABOVE THE FLOOR AND PER SECTION R-301.1. ALL EMERGENCY ESCAPE SHALL HAVE A MIN. CLEAR OPENING 5.7SQ.FT. WITH A MIN. OF OPENING HEIGHT 24" AND MIN WIDTH 20". 2019 CRC SECTION 310.1,1,2, AND 3.
3. MINIMUM ONE EGRESS DOOR THAT IS HINGED SWINING DOOR WITH MINIMUM CLEAR WIDTH OF 32 INCHES MINIMUM HEIGHT OF 78 INCHES AND OPEN- ABLE FROM THE INSIDE OF THE DWELLING WITH- OUT USE OF KEY, SPECIAL KNOWLEDGE OR EFFORT. CRC SECTION R 311.2
4. THE EXTERIOR LANDING AT THE EXTERIOR DOOR SHALL BE A MAXIMUM OF 7-3/4" BELOW THE TOP OF THE THRESHOLD. CBC 1010.1.5, EXCEPTION 3.
5. MINIMUM 5'X5' LEVEL LANDING, NOT MORE THAN 1" OUT OF PLANE WITH THE IMMEDIATE INTERIOR FLOOR LEVEL WITH AN 18" CLEARANCE AT THE INTERIOR STRIKE EDGE, AS REQUIRED PER CITY TOWN RESIDENTIAL ACCESSIBILITY STANDARDS.
6. ENTRY DOOR SHALL BE READILY OPENABLE FROM THE INSIDE WITHOUT THE USE OF A KEY OR SPECIAL KNOWLEDGE OR EFFORT PER CRC R311.2.

C.FIRE PROTECTION

CARBON MONOXIDE ALARMS ARE REQUIRED, ALARMS TO BE INTERCONNECTED, HAVE TO BE PLACED IN EACH BEDROOM AND JUST OUTSIDE THE IMMEDIATE VINVINITY OF EACH SLEEPINGARA AT EACH LEVEL INLUDING BASEMENTS PER R 315 OF 2019 CRC OUTLETS.

1. INTERIOR AND EXTERIOR - PROVIDE TAMPER RESISTANT OUTLETS IN ALL 125 VOLTS, 15 AND 20 AMP RECEPTACLES FOR ALL AREAS OF SINGLE FAMILY HOME SECTION 408.11 AND 210.52 OF 2019 CEC
2. BATHROOM OUTLETS - PROVIDE DEDICATED CIRCUIT FOR BATHROOM OUTLETS SECTION 210.11 OF 2019 CEC.
3. DOOR BETWEEN THE GARAGE AND PRIVATE RESIDENCE SHALL BE SELF- CLOSING AND SELF LATCHING PER CRC R 302.5.1. DOOR SHALL BE MIN. 1 3/8" THICK, OR A 20- MINUTE FIRE RATED DOOR PER C.R.C.NOTE AIR BARRIER TO BE TIGHTLY SEALED PER 2019 CGBS CODE
4. PROVIDE MINIMUM1/2"GYPSUM BOARD TO THE GARAGE SIDE FOR SEPARATION BETWEEN GARAGE AND ATTIC SPACE PER CRC TABLE R302.6
5. THE ENCLOSED ACCESSIBLE SPACE UNDER STAIRS SHALL HAVE UNDER- STAIR PROTECTION WITH 1/2 INCH GYPSUM BOARD PER CRC SECTION R302.7

D.GLAZING

1.ALL GLASS AND GLAZING SHALL COMPLY WITH THE U.S. SAFETY STANDARDS FOR ACHITECTURAL GLAZING MATERIALS AND WITH FEDERAL SPECIFICATIONS 2019 CRC R308
2. VERIFY WINDOWS MEET EGRESS REQUIREMENTS PER 2019, SECTION 310.1.1. AT LEAST ONE ESCAPE ROUTE FROM EACH SLEEPING ROOM, 20" MIN. CLEAR WIDTH.24" CLEAR HEIGHT AND 5.7 SQ. FT. CLEAR OPENING, BOTTOM OF CLEAR OPENING HEIGHT SHALL NOT BE MORE THAN 44" ABOVE THE FLOOR.
3. GLAZING IN ANY DOOR OR GLAZING WITH 24" OF ANY DOOR WITHIN 60" OFF FLOORS TO BE TEMPERED GLASS. GLAZING WITHIN 18" OFF THE FLOOR AS PER ORAT ENCLOSED WALLS AT STAIRWAYS SHALLED BE TEMPERED GLASS, PER 2019 CRC SECTION R308.4.5. AND SECTION 308.4.7.
4. DOOR AND PANELS OF SHOWER AND BATHTUB ENCLOSURES SHALL BE FULLY TEMPERED LAMINATED SAFETY GLASS. CRC SECTION R308.4.5
5. WINDOWS WITHIN 60 INCHES ABOVE A STANDING SURFACE AND DRAIN INLET SHALL BE FULLY TEMPERED, LAMINATED SAFETY GLASS OR APPROVED PLASTIC. CRC SECTION R308.4.5
6. OPERATION SHALL BE FROM INSIDE THE ROOM WITHOUT THE USE OF SPECIAL KEYS, TOOLS, OR KNOWLEDGE. CRC R310.1.1
7. WINDOW SILL HEIGHT NO MORE THAN 44" ABOVE THE FINISH FLOOR FOR EGRESS WINDOW. CRC R310.1
8.PER CRC R308.4 GLAZING ADJACENT TO STAIRWAYS , LANDINGS AND RAMPS WITHIN 36 INCHES HORIZONTALLY OF A WALKING SURFACE WHEN THE EXPOSED SURACE OF THE GLAZING IS LESS THAN 60 INCHES ABOVE THE PLANE OF THE ADJACENT WALKING SURFACE SHALL BE TEMPERED
9. TEMPERED GLASS IN ALL HAZARDOUS LOCATIONS AS REQUIRED BY 2019 CRC SECTIONS R306.1-4. ANY WINDOW OPENINGS MEASURED AT WINDOW SILL THAT IS LOCATED MORE THAN 72" ABOVE THE EXTERIOR FINISHED GRADE AND WINDOW OPENINGS LOCATED LESS THAN 24" ABOVE THE FINISHED FLOOR SHALL EITHER HAVE FIXED GLAZING OR PROTECTIVE GUARDRAIL 2019 CRC R612.2

E. PERFORMANCE

1.ALL HARDWOOD FLOOR TO BE INSTALLED IN ACCORDANCE WITH THE LATEST NOFMA SPECIFICATIONS AND RECOMMENDATIONS.
2. ALL TILE WORK TO BE INSTALLED IN ACCORDANCE WITH THE CURRENT TILE CONTROL OF AMERICA SPECIFICATIONS AND RECOMMENDATIONS.
3. ALL PLUMBING WORK SHALL COMPLY WITH THE UNIFORM CODE, SAFETY ORDERS IF THE STATE OF CALIFORNIA AND ALL LOCAL CODES AND ORDINANCES.
4. ALL ELECTRICAL WORK SHALL CONFORM THE NATIONAL ELECTRIC CODE AND ALL OTHER APPLICABLE CODES AND REQUIREMENTS.
5. ALL HVAC WORK SHALL BE CONFORMANCE WITH THE APPLICABLE CODES, THE UNIFORMMECHANICAL CODE AND THE RECOMMENDED CODES AND ORDINANCES.

F. PLUMBING FIXTURES AND FITTINGS

1. PLUMBING FIXTURES AND FITTINGS SHALL MEET STANDARDS IN TABLE 4.303 OF 2019 CGBS CODE.
2. AUTOMATIC IRRIGATION SYSTEM CONTROLLERS FOR LANDSCAPING PROVIDED BY BUILDER AND INSTALLED AT THE TIME OF INSPECTION SHALL COMPLY WITH CGBS SECTION 4.304
3. PROVIDE WATER HAMMER ARESTOR ON WATER LINES TO ABSORB HIGH PRESSURES RESULTING FROM THE QUICK CLOSING OF QUICK-ACTING VALVES. IT SHALL BE LOCATEDAS CLOSE AS POSSIBLE TO QUICK ACTING-VALVES PER CPC SECTION 609.10.

G. BUILDING MAINTENANCE AND OPERATION

1.AT THE TIME OF FINAL INSPECTION, A MANUAL, COMPACT DISC, M WEB BASED REFERENCE OF OTHER MEDIA ACCEPTABLE TO THE ENFORCING AGENCY SHALL BE PLACED IN THE BUILDING PER 2019 CGBS SECTION 4.410, NO. 1,2,7,8
2. PROPERTY IDENTIFICATION SIZE TO BE CLEARLY VISIBLE AND LEGIBLE FROM THE ADJACENT PUBLIC WAY OR STREET. ADDRESS LETTER NUMBERS SHALL BE MINIMUM 4 INCHES HIGH, WITH A MINIMUM STROKE WIDTH OF 1/2 INCH, AND SHALL CONTRAST WITH THEIR BACKGROUND

H. FIREPLACES

ANY INSTALLED GAS FIREPLACE SHALL BE A DIRECT VENT SEALED-COMBUSTION TYPE AND SHALL COMPLY WITH U.S. EPA PHASE II EMISSION LIMITS WHERE APPLICABLE. PER 2019 CGBS, SECTION 4.503 (IF APPLICABLE).

I. POLLUTANT CONTROL

1. DUCT OPENING AND MECHANICAL, EQUIPMENT SHALL BE COVERED AND PROTECTED DURING CONSTRUCTION PER 2019 CGBS SECTION 4.504.1 AND 4.502.2 ADHESIVES, SEALANTS AND CAULKING MATERIAL SHALL MEET REQUIREMENTS PER 2019 CGBS, SECTION 4.502.1.
2. PAINTS AND COATINGS SHALL COMPLY WITH VOC LIMITS IN TABLE-1 OF THE ARB ARCHITECTURAL SUGGESTED CONTROL, MEASURE AS SHOWN ON TABLE 4.504.3 PER 2019 CGBS SECTION 4.504.2.2 AND VERIFICATION COMPLIANCE SHALL BE PROVIDED PER 2019 CGBS SECTION 4.504.2.4

J. BATHROOM

1. SHOWER /TUB WALLS TO SPECIFY A SMOOTH, HARD, NONABSORBENT SURFACE CERAMIC TILE OVER A MOISUTRE RESISTANT UNDERLAYMENT GLASS MAY GYMPSUM BACKER TO A HEIGHT OF 72" ABOVE THE DRAIN INLET. WATER RESISTANT GYPSUM BACKING BOARD SHALL NOT BE USED OVER A VAPOR RETARDER IN SHOWER OR BATHTUB COMPARTMENTS. CRC R307.2
2. 2x8 WOODEN BACKING IN ALL BATHROOM WALLS AT WATER CLOSET ,SHOWER, AND BATHTUB LOCATED AT 34 " FROM THE FLOOR TO CENTER OF BACKING, SUITABLE FOR ADDITION OF GRAB BARS.
3. REQUIRED CLEARANCE AT WATER CLOSETS- MINIMUM 30 INCHES WIDE CLEAR SPACE AT WATER CLOSET EXTENDING AT LEAST 24 INCHES IN FRONT OF THE WATER CLOSET IS REQUIRED CPC 402.5
4. SHOWERS SHALL HAVE A MINIMUM 22 INCHES DOOR FOR EGRESS CPC 408.5

K. BALCONIES AND DECKS

1. WATERPROOF MEMBRANE SHALL BE BALCONY ASSEMBLY 1 BY SHULTER SYSTEMS OR EQUAL INSTALLS PER MANUFACTURER ICC-ES-ESR-2467
2. TILE O/ GROUT 0/ WITH WATERPROOF MEMBRANE. SLOPE TO DRAIN TYPICAL.
3. COMBINATION 4" DRAIN WITH OVERFLOW DRAIN 2" MINIMUM ABOVE R.D. SET IN ROOF RECESS TYPICAL.
4. GUARDRAIL SHALL A MIN HEIGHT OF 42" AND SHALL MEET OPENING LIMITATIONS WHICH ALLOW PASSAGE OF A SPHERE 4" PER SECTION R- 312.3]

WILDAND URBAN INTERFACE REQUIREMENTS

A. Provide Class A roof per Section R337.5. Provide A noncombustible (tile or metal) or Class 'A' roofing assembly is required in SRA - Very High Fire Hazard Severity Zones.

B. Provide roof valleys and gutters per Section R337.5. Where valley flashing is installed, the flashing shall be not less than 0.019-inch (0.48 mm) No. 26 gage galvanized sheet corrosion-resistant metal installed over not less than one layer of minimum 72- pound (32.4 kg) mineral-surfaced nonperforated cap sheet complying with ASTM D3909, at least 36-inch-wide (914 mm) running the full length of the valley. Roof gutters shall be provided with the means to prevent the accumulation of leaves and debris in the gutter.

C. Attic ventilation should be protected per Section R337.6, eave or cornice vents are not allowed unless the products complying to exceptions of Section R337.6.3 are used. Ventilation openings for enclosed attics, enclosed eave soffit spaces, enclosed rafter spaces formed where ceilings are applied directly to the underside of roof rafters, and underfloor ventilation openings shall be fully covered with Wildland Flame and Ember Resistant (WUI) vents approved and listed by the California State Fire Marshal, or WUI vents listed to ASTM E2886. An exception allows vent 1/8" openings on top of sloped roofs that are corrosion-resistant, noncombustible wire mesh or equivalent.

D. Provide eave protections per Section R337.7.4 and 337.7.5. The exposed underside of enclosed roof eaves having either a boxed-in roof eave soffit with a horizontal underside, or sloping rafter tails with an exterior covering applied to the underside of the rafter tails, shall be protected by one layer of 5/8-inch Type X gypsum sheathing applied behind an exterior covering on the underside of the rafter tails or soffit.

E. Provide protections for exterior walls per Section R337.7.3. Provide noncombustible, listed ignition-resistant materials, 5/8" Type X gypsum sheathing behind exterior covering, exterior portion of 1-hr assembly.

F. Provide protections for exterior openings including doors and windows per Section R337.8. Windows to be constructed of multipane glazing with a minimum of one tempered pane meeting the requirements of Section R308 Safety Glazing. Exterior surface or cladding of exterior doors shall be tested to meet the performance requirements of Section R337.7.3.1 when tested in accordance with ASTM E2707

G. The underside of appendages (including undersides of porches), and floor projections should be protected per Section R337.7.6 through R337.7.9. Walking surfaces of decks, porches. balconies and stairs within 10 feet of the building must be constructed of noncombustible, fire-retardant treated or heavy-timber construction. Alternate materials can be used of they are ignition-resistant and pass performance requirements specified by the State Fire Marshal

H. Decking shall be protected per Section R337.9. The exposed underfloors, underside of cantilevered and overhanging decks, balconies and similar appendages shall be non-combustible, ignition resistant, 5/8" Type X gypsum sheathing behind exterior covering, exterior portion of 1-hr assembly, meet performance criteria SFM Standard 12-7A-3 or be enclosed to grade.

I. Accessory buildings and structures should be protected per Section R337.10. Accessory buildings that are less than 120 square feet in floor area and are located more than 30 feet but less than 50 feet from an applicable building shall be constructed of noncombustible materials.

WINDOW AND DOOR SCHEDULE

WINDOW SCHEDULE

NUMBER	QTY	FLOOR	ROOM NAME	BOTTOM	TOP	WIDTH	HEIGHT	DESCRIPTION	R/O	HEADER	EGRESS	TEMPERED
W01	1	1	HALL/EXERCISE ROOM	36"	96"	36 "	60 "	FIXED GLASS	37"X61"	2X6X40" (2)		
W02	1	1	EXERCISE ROOM	36"	96"	36 "	60 "	FIXED GLASS	37"X61"	2X6X40" (2)		YES
W03	3	1	ENTERTAINMENT ROOM	24"	96"	36 "	72 "	SINGLE CASEMENT-HR	37"X73"	2X6X40" (2)		YES
W04	2	1	ENTERTAINMENT ROOM	24"	96"	60 "	72 "	SINGLE CASEMENT-HR	61"X73"	2X8X64" (2)		YES

DOOR SCHEDULE

NUMBER	QTY	FLOOR	EX/IN	ROOM NAME	WIDTH	HEIGHT	DESCRIPTION	R/O	HEADER	THICKNESS
D01	1	1	EX	GARAGE	192 "	96 "	GARAGE-GARAGE DOOR CHD05	194"X99"	2X12X200" (2)	1 3/4"
D02	1	1	EX	GARAGE	34 "	96 "	EXT. HINGED-DOOR E21	36"X99"	2X6X39" (2)	1 3/8"
D03	1	1	EX	ENTERTAINMENT ROOM	36 "	96 "	EXT. HINGED-GLASS PANEL	38"X99"	2X6X41" (2)	1 3/4"
D04	1	1	IN	SHOP/HALL	32 "	96 "	HINGED-DOOR P04	34"X98 1/2"	2X6X37" (2)	1 3/8"
D05	1	1	IN	WINE STORAGE/STAIRWELL	30 "	96 "	HINGED-DOOR P04	32"X98 1/2"	2X6X35" (2)	1 3/8"
D06	1	1	IN	HALL/EXERCISE ROOM	36 "	96 "	HINGED-DOOR F05	38"X98 1/2"	2X6X41" (2)	1 3/8"
D07	1	1	IN	STORAGE/EXERCISE ROOM	54 "	80 "	DOUBLE HINGED-DOOR P04	56"X82 1/2"	2X8X59" (2)	1 3/4"
D08	1	1	IN	BATH #5/HALL	30 "	96 "	HINGED-DOOR P04	32"X98 1/2"	2X6X35" (2)	1 3/4"
D09	1	1	IN	LAUNDRY/HALL	32 "	96 "	POCKET-DOOR P04	66"X98 1/2"	2X6X69" (2)	1 3/8"
D10	1	1	IN	HALL/ENTERTAINMENT ROOM	36 "	96 "	HINGED-DOOR P04	38"X98 1/2"	2X6X41" (2)	1 3/4"

BASEMENT FLOOR PLAN

DATE: 7/11/22

SCALE: 1/4" = 1'0"

SHEET: A 3.0

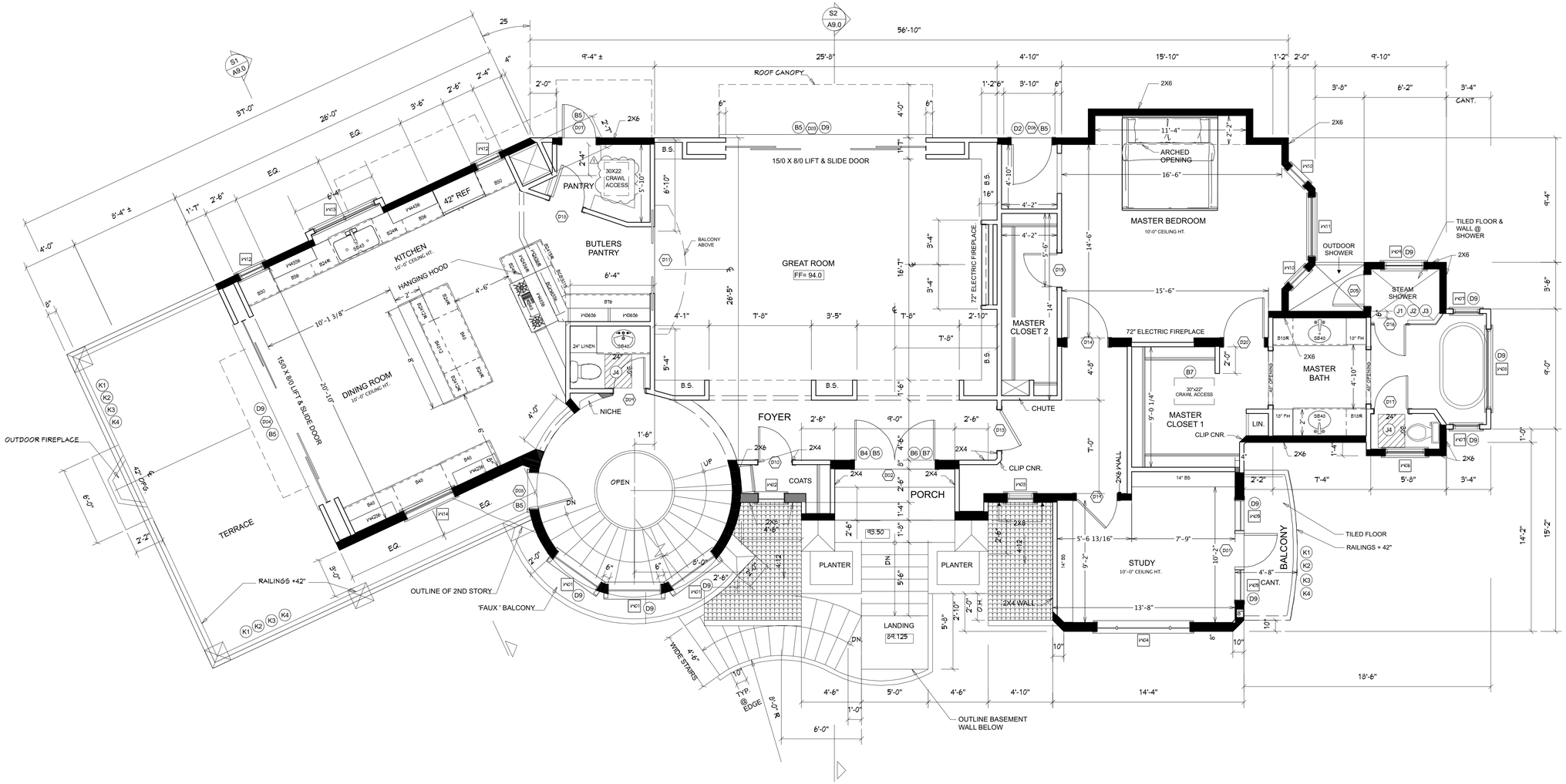

FIRST FLOOR PLAN= 1/4" = 1'0"

LEGEND

- WOOD DECKING
- EXTERIOR TILE
- A1 — BUILDING CODE NOTE
- W1 — WINDOW SCHEDULE LABEL NUMBER
- D1 — DOOR SCHEDULE LABEL NUMBER
- S1 / A9.0 — SECTION LABEL
- 2X8 WALL
- 2X6 WALL
- 2x4 WALL
- 1 / A — WILD URBAN INTERFACE CALLOUT

BUILDING CODES

A. VENTILATION

1. LOCATION AND SIZE OF FOUNDATION VENTS TO CONFORM WITH 2019 CRC SECTION R 408.1 AND R 408.2
2. PROVIDE UNDER ROOF CROSS VENTILATION AT THE RATE OF 1/150 OF THE ATTIC AREA PER CRC 2019 R 806.2
3. ALL HABITABLE ROOMS SHALL HAVE AN AGGREGATE GLAZING AREA OF NOT LESS 8% OF THE FLOOR AREA, NATURAL VENTILATION SHALL BE PROVIDED WITH READY ACCESS OR SHALL OTHERWISE BE READILY CONTROLLED PER 2019 CRC R 303.1
4. PROVIDE CLOTHES DRYWER VENT TO THE OUSIDE PERM CMC 904.3.2

B.ACCESS

1. PROVIDE 22X30 ATTIC ACCESS TO FIRST FLOOR
2. EMERGENCY ESCAPE AND RESCUE OPENINGS SHALL HAVE A SILL HEIGHT OF NOT MORE THAN 44" ABOVE THE FLOOR AND PER SECTION R-301.1; ALL EMERGENCY ESCAPE SHALL HAVE A MIN. CLEAR OPENING 5.75Q.FT. WITH A MIN. OF OPENING HEIGHT 24" AND MIN WIDTH 20". 2019 CRC SECTION 310.1,1.2, AND 3.
3. MINIMUM ONE EGRESS DOOR THAT IS HINGED SWINING DOOR WITH MINIMUM CLEAR WIDTH OF 32 INCHES MINIMUM HEIGHT OF 78 INCHES AND OPEN– ABLE FROM THE INSIDE OF THE DWELLING WITH– OUT USE OF KEY, SPECIAL KNOWLEDGE OR EFFORT. CRC SECTION R 311.2
4. THE EXTERIOR LANDING AT THE EXTERIOR DOOR SHALL BE A MAXIMUM OF 7–3/4" BELOW THE TOP OF THE THRESHOLD. CRC 1010.1.5, EXCEPTION 3.
5. MINIMUM 5'X5' LEVEL LANDING, NOT MORE THAN 1" OUT OF PLANE WITH THE IMMEDIATE INTERIOR FLOOR LEVEL WITH AN 18" CLEARANCE AT THE INTERIOR STRIKE EDGE, AS REQUIRED PER CITY TOWN RESIDENTIAL ACCESSIBILITY STANDARDS.
6. ENTRY DOOR SHALL BE READILY OPENABLE FROM THE INSIDE WITHOUT THE USE OF A KEY OR SPECIAL KNOWLEDGE OR EFFORT PER CRC R311.2.

C.FIRE PROTECTION

CARBON MONOXIDE ALARMS ARE REQUIRED, ALARMS TO BE INTERCONNECTED, HAVE TO BE PLACED IN EACH BEDROOM AND JUST OUTSIDE THE IMMEDIATE VINVINITY OF EACH SLEEPINGARA AT EACH LEVEL INLUDING BASEMENTS PER R 315 OF 2019 CRC OUTLETS.
1. INTERIOR AND EXTERIOR – PROVIDE TAMPER RESISTANT OUTLETS IN ALL 125 VOLTS, 15 AND 20 AMP RECEPTACLES FOR ALL AREAS OF SINGLE FAMILY HOME SECTION 408.11 AND 210.52 OF 2019 CEC.
2. BATHROOM OUTLETS – PROVIDE DEDICATED CIRCUIT FOR BATHROOM OUTLETS SECTION 210.11 OF 2019 CEC.
3. DOOR BETWEEN THE GARAGE AND PRIVATE RESIDENCE SHALL BE SELF– CLOSING AND SELF LATCHING PER CRC R 302.5.1. DOOR SHALL BE MIN. 1 3/8" THICK, OR A 20– MINUTE FIRE RATED DOOR PER C.R.C.NOTE AIR BARRIER TO BE TIGHTLY SEALED PER 2019 CGBS CODE
4. PROVIDE MINIMUM1/2"GYPSUM BOARD TO THE GARAGE SIDE FOR SEPARATION BETWEEN GARAGE AND ATTIC SPACE PER CRC TABLE R302.6
5. THE ENCLOSED ACCESSIBLE SPACE UNDER STAIRS SHALL HAVE UNDER– STAIR PROTECTION WITH 1/2 INCH GYPSUM BOARD PER CRC SECTION R302.7

D.GLAZING

1.ALL GLASS AND GLAZING SHALL COMPLY WITH THE U.S. SAFETY STANDARDS FOR ACHITECTURAL GLAZING MATERIALS AND WITH FEDERAL SPECIFICATIONS 2019 CRC R308
2. VERIFY WINDOWS MEET EGRESS REQUIREMENTS PER 2019, SECTION 310.1.1. AT LEAST ONE ESCAPE ROUTE FROM EACH SLEEPING ROOM, 20" MIN. CLEAR WIDTH,24" CLEAR HEIGHT AND 5.7 SQ. FT. CLEAR OPENING, BOTTOM OF CLEAR OPENING HEIGHT SHALL NOT BE MORE THAN 44" ABOVE THE FLOOR.
3. GLAZING IN ANY DOOR OR GLAZING WITH 24" OF ANY DOOR WITHIN 60" OFF FLOORS TO BE TEMPERED GLASS. GLAZING WITHIN 18" OFF THE FLOOR AS PER ORAT ENCLOSED WALLS AT STAIRWAYS SHALLED BE TEMPERED GLASS, PER 2019 CRC SECTION R308.4.5. AND SECTION 308.4.7.
4. DOOR AND PANELS OF SHOWER AND BATHTUB ENCLOSURES SHELL BE FULLY TEMPERED LAMINATED SAFETY GLASS. CRC SECTION R308.4.5
5. WINDOWS WITHIN 60 INCHES ABOVE A STANDING SURFACE AND DRAIN INLET SHALL BE FULLY TEMPERED, LAMINATED SAFETY GLASS OR APPROVED PLASTIC. CRC SECTION R308.4.5
6. OPERATION SHALL BE FROM INSIDE THE ROOM WITHOUT THE USE OF SPECIAL KEYS, TOOLS, OR KNOWLEDGE. CRC R310.1.3
7. WINDOW SILL HEIGHT NO MORE THAN 44" ABOVE THE FINISH FLOOR FOR EGRESS WINDOW. CRC R310.1
8.PER CRC R308.4 GLAZING ADJACENT TO STAIRWAYS , LANDINGS AND RAMPS
WITHIN 36 INCHES HORIZONTALLY OF A WALKING SURFACE WHEN THE EXPOSED SURACE OF THE GLAZING IS LESS THAN 60 INCHES ABOVE THE PLANE OF THE ADJACENT WALKING SURFACE SHALL BE TEMPERED
9. TEMPERED GLASS IN ALL HAZARDOUS LOCATIONS AS REQUIRED BY 2019 CRC SECTIONS R306.1–4. ANY WINDOW OPENINGS MEASURED AT WINDOW SILL THAT IS LOCATED MORE THAN 72" ABOVE THE EXTERIOR FINISHED GRADE AND WINDOW OPENINGS LOCATED LESS THAN 24" ABOVE THE FINISHED FLOOR SHALL EITHER HAVE FIXED GLAZING OR PROTECTIVE GUARDRAIL 2019 CRC R612.2

E. PERFORMANCE

1.ALL HARDWOOD FLOOR TO BE INSTALLED IN ACCORDANCE WITH THE LATEST NOFMA SPECIFICATIONS AND RECOMMENDATIONS.
2. ALL TILE WORK TO BE INSTALLED IN ACCORDANCE WITH THE CURRENT TILE CONTROL OF AMERICA SPECIFICATIONS AND RECOMMENDATIONS.
3. ALL PLUMBING WALLS SHALL COMPLY WITH THE UNIFORM CODE, SAFETY ORDERS IF THE STATE OF CALIFORNIA AND ALL LOCAL CODES AND ORDINANCES.
4. ALL ELECTRICAL WORK SHALL CONFORM THE NATIONAL ELECTRIC CODE AND ALL OTHER APPLICABLE CODES AND REQUIREMENTS.
5. ALL HVAC WORK SHALL BE CONFORMANCE WITH THE APPLICABLE CODES, THE UNIFORMMECHANICAL CODE AND THE RECOMMENDED CODES AND ORDINANCES.

F. PLUMBING FIXTURES AND FITTINGS

1. PLUMBING FIXTURES AND FITTINGS SHALL MEET STANDARDS IN TABLE 4.303 OF 2019 CGBS CODE.
2. AUTOMATIC IRRIGATION SYSTEM CONTROLLERS FOR LANDSCAPNG PROVIDED BY BUILDER AND INSTALLED AT THE TIME OF INSPECTION SHALL COMPLY WITH CGBS SECTION 4.304
3. PROVIDE WATER HAMMER ARESTOR ON WATER LINES TO ABSORB HIGH PRESSURES RESULTING FROM THE QUICK CLOSING OF QUICK–ACTING VALVES. IT SHALL BE LOCATEDAS CLOSE AS POSSIBLE TO QUICK ACTING–VALVES PER CPC SECTION 609.10.

G. BUILDING MAINTENANCE AND OPERATION

1.AT THE TIME OF FINAL INSPECTION, A MANUAL, COMPACT DISC, M WEB BASED REFERENCE OF OTHER MEDIA ACCEPTABLE TO THE ENFORCING AGENCY SHALL BE PLACED IN THE BUILDING PER 2019 CGBS SECTION 4.410, NO. 1,2,7,8.
2. PROPERTY IDENTIFICATION SIZE TO BE CLEARLY VISIBLE AND LEGIBLE FROM THE ADJACENT PUBLIC WAY OR STREET. ADDRESS LETTER NUMBERS SHALL BE MINIMUM 4 INCHES HIGH, WITH A MINIMUM STROKE WIDTH OF 1/2 INCH, AND SHALL CONTRAST WITH THEIR BACKGROUND

H. FIREPLACES

ANY INSTALLED GAS FIREPLACE SHALL BE A DIRECT VENT SEALED–COMBUSTION TYPE AND SHALL COMPLY WITH U.S. EPA PHASE II EMISSION LIMITS WHERE APPLICABLE. PER 2019 CGBS, SECTION 4.503 (IF APPLICABLE).

I. POLLUTANT CONTROL

1. DUCT OPENING AND MECHANICAL EQUIPMENT SHALL BE COVERED AND PROTECTED DURING CONSTRUCTION PER 2019 CGBS SECTION 4.504.1 AND 4.502.2 ADHESIVES, SEALANTS AND CAULKING MATERIAL SHALL MEET REQUIREMENTS PER 2019 CGBS, SECTION 4.502.1.
2. PAINTS AND COATINGS SHALL COMPLY WITH VOC LIMITS IN TABLE–1 OF THE ARB ARCHITECTURAL SUGGESTED CONTROL, MEASURE AS SHOWN ON TABLE 4.504.3 PER 2019 CGBS SECTION 4.504.2.2 AND VERIFICATION COMPLIANCE SHALL BE PROVIDED PER 2019 CGBS SECTION 4.504.2.4

J. BATHROOM

1. SHOWER /TUB WALLS TO SPECIFY A SMOOTH, HARD, NONABSOBBENT SURFACE CERAMIC TILE OVER A MOISUTRE RESISTANT UNDERLAYMENT GLASS MAY GYMPSUM BACKER TO A HEIGHT OF 72" ABOVE THE DRAIN INLET. WATER RESISTANT GYPSUM BACKING BOARD SHALL NOT BE USED OVER A VAPOR RETARDER IN SHOWER OR BATHTUB COMPARTMENTS. CRC R307.2.
2. 2x8 WOODEN BACKING IN ALL BATHROOM WALLS AT WATER CLOSET ,SHOWER, AND BATHTUB LOCATED AT 34 " FROM THE FLOOR TO CENTER OF BACKING, SUITABLE FOR ADDITION OF GRAB BARS.
3. REQUIRED CLEARANCE AT WATER CLOSETS– MINIMUM 30 INCHES WIDE CLEAR SPACE AT WATER CLOSET EXTENDING AT LEAST 24 INCHES IN FRONT OF THE WATER CLOSET IS REQUIRED CPC 402.5
4. SHOWERS SHALL HAVE A MINIMUM 22 INCHES DOOR FOR EGRESS CPC 408.5

K. BALCONIES AND DECKS

1. WATERPROOF MEMBRANE SHALL BE BALCONY ASSEMBLY 1 BY SHULTER SYSTEMS OR EQUAL INSTALLS PER MANUFACTURER ICC–ES–ESR–2467
2. TILE O/ GROUT O/ WITH WATERPROOF MEMBRANE. SLOPE TO DRAIN TYPICAL.
3. COMBINATION 4" DRAIN WITH OVERFLOW DRAIN 2" MINIMUM ABOVE R.D. SET IN ROOF RECESS TYPICAL.
4. GUARDRAIL SHALL A MIN HEIGHT OF 42" AND SHALL MEET OPENING LIMITATIONS WHICH ALLOW PASSAGE OF A SPHERE 4" PER SECTION R– 312.3]

WILDAND URBAN INTERFACE REQUIREMENTS

A. Provide Class A roof per Section R337.5. Provide A noncombustible (tile or metal) or Class 'A' roofing assembly is required in SRA - Very High Fire Hazard Severity Zones.

B. Provide roof valleys and gutters per Section R337.5. Where valley flashing is installed, the flashing shall be not less than 0.019-inch (0.48 mm) No. 26 gage galvanized sheet corrosion-resistant metal installed over not less than one layer of minimum 72- pound (32.4 kg) mineral-surfaced nonperforated cap sheet complying with ASTM D3909, at least.36-inch-wide (914 mm) running the full length of the valley. Roof gutters shall be provided with the means to prevent the accumulation of leaves and debris in the gutter.

C. Attic ventilation should be protected per Section R337.6, eave or cornice vents are not allowed unless the products complying to exceptions of Section R337.6.3 are used. Ventilation openings for enclosed attics, enclosed eave soffit spaces, enclosed rafter spaces formed where ceilings are applied directly to the underside of roof rafters, and underfloor ventilation openings shall be fully covered with Wildland Flame and Ember Resistant (WUI) vents approved and listed by the California State Fire Marshal, or WUI vents listed to ASTM E2886. An exception allows vent 1/8" openings on top of sloped roofs that are corrosion-resistant, noncombustible wire mesh or equivalent.

D. Provide eave protections per Section R337.7.4 and 337.7.5. The exposed underside of enclosed roof eaves having either a boxed-in roof eave soffit with a horizontal underside, or sloping rafter tails with an exterior covering applied to the underside of the rafter tails, shall be protected by one layer of 5/8-inch Type X gypsum sheathing applied behind an exterior covering on the underside of the rafter tails or soffit.

E. Provide protections for exterior walls per Section R337.7.3. Provide noncombustible, listed ignition-resistant materials, 5/8" Type X gypsum sheathing behind exterior covering, exterior portion of 1-hr assembly

F. Provide protections for exterior openings including doors and windows per Section R337.8. Windows to be constructed of multipane glazing with a minimum of one tempered pane meeting the requirements of Section R308 Safety Glazing. Exterior surface or cladding of exterior doors shall be tested to meet the performance requirements of Section R337.7.3.1 when tested in accordance with ASTM E2707

G. The underside of appendages (including undersides of porches), and floor projections should be protected per Section R337.7.6 through R337.7.9. Walking surfaces of decks, porches, balconies and stairs within 10 feet of the building must be constructed of noncombustible, fire-retardant treated or heavy-timber construction. Alternate materials can be used of they are ignition-resistant and pass performance requirements specified by the State Fire Marshal

H. Decking shall be protected per Section R337.9. The exposed underfloors, underside of cantilevered and overhanging decks, balconies and similar appendages shall be non-combustible, ignition resistant, 5/8" Type X gypsum sheathing behind exterior covering, exterior portion of 1-hr assembly, meet performance criteria SFM Standard 12-7A-3 or be enclosed to grade.

I. Accessory buildings and structures should be protected per Section R337.10. Accessory buildings that are less than 120 square feet in floor area and are located more than 30 feet but less than 50 feet from an applicable building shall be constructed of noncombustible materials.

WINDOW AND DOOR SCHEDULE

DOOR SCHEDULE

NUMBER	QTY	FLOOR	EXT/INT	ROOM NAME	WIDTH	HEIGHT	DESCRIPTION	R/O	HEADER	THICKNESS
D01	1	2	EX	BALCONY/STUDY	20 "	96 "	EXT. HINGED-GLASS PANEL	32"X99"	2X6X39" (2)	1 3/4"
D02	1	2	EX	ENTRY/FOYER	72 "	96 "	EXT. DOUBLE-HINGED-GLASS PANEL	74"X99"	2X10X77.5" (2)	1 3/8"
D03	1	2	IN		180 "	96 "	QUAD SLIDER-GLASS PANEL	182"X98 1/2"	2X12X188" (2)	1 3/4"
D04	1	2	IN	KITCHEN/ DINING	180 "	96 "	QUAD SLIDER-GLASS PANEL	182"X98 1/2"	2X12X188" (2)	1 3/4"
D05	1	2	EX	MASTER BATH	28 "	80 "	EXT. HINGED-GLASS PANEL	30"X83"	2X6X33" (2)	1 3/4"
D06	1	2	EX	MASTER BDRM	36 "	96 "	EXT. HINGED-GLASS PANEL	38"X99"	2X6X41" (2)	1 3/4"
D07	1	2	EX	PANTRY	30 "	96 "	EXT. HINGED-GLASS PANEL	32"X99"	2X6X39" (2)	1 3/4"
D08	1	2	IN	STAIRWELL/ KITCHEN/ DINING	32 "	96 "	HINGED-GLASS PANEL	34"X98 1/2"	2X6X37" (2)	1 3/8"
D09	1	2	IN	STAIRWELL/ BATH	28 "	96 "	HINGED-DOOR Pd4	30"X98 1/2"	2X6X33" (2)	1 3/8"
D10	1	2	IN	ENTRY/FOYER/ENTRY/FOYER	30 "	96 "	HINGED-DOOR Pd4	32"X98 1/2"	2X6X35" (2)	1 3/8"
D11	1	2	EX	BUTLER PANTRY	60 "	96 "	EXT. DOUBLE POCKET-DOOR Pd4	122" X98 1/2"	2X6X125" (2)	1 3/8"
D13	1	2	IN	HALL /ENTRY/FOYER	36 "	96 "	HINGED-DOOR Pd4	38"X98 1/2"	2X6X41" (2)	1 3/8"
D14	1	2	IN	HALL/MASTER BDRM	36 "	96 "	HINGED-DOOR Pd4	38"X98 1/2"	2X6X41" (2)	1 3/8"
D15	1	2	IN	MASTER BDRM/MASTER CLOSET 2	30 "	96 "	HINGED-DOOR Pd4	32"X98 1/2"	2X6X39" (2)	1 3/8"
D16	1	2	IN	MASTER BATH/MASTER BATH	28 "	96 "	HINGED-GLASS PANEL	30"X98 1/2"	2X6X33" (2)	1 3/8"
D17	1	2	IN	MASTER BATH/MASTER BATH	30 "	96 "	HINGED-DOOR Pd3	32"X98 1/2"	2X6X35" (2)	1 3/8"
D18	1	2	IN	PANTRY/BUTLER PANTRY	30 "	96 "	HINGED-DOOR Pd4	32"X98 1/2"	2X6X35" (2)	1 3/8"
D19	1	2	IN	STUDY/HALL	36 "	96 "	HINGED-DOOR Pd4	38"X98 1/2"	2X6X41" (2)	1 3/8"
D20	1	2	IN	UNSPECIFIED/MASTER BDRM	36 "	96 "	HINGED-DOOR Pd4	38"X98 1/2"	2X6X41" (2)	1 3/8"

WINDOW SCHEDULE

NUMBER	QTY	FLOOR	ROOM NAME	BOTTOM	TOP	WIDTH	HEIGHT	DESCRIPTION	R/O	HEADER	EGRESS	TEMPERED
W01	3	2	STAIRWELL	36"	96"	48 "	60 "	FIXED GLASS	49"X61"	2X8X52" (2)		YES
W02	1	2	ENTRY/FOYER	48"	96"	24 "	48 "	FIXED GLASS	25"X49"	2X6X26" (2)		YES
W03	1	2	HALL	48"	96"	24 "	48 "	SINGLE CASEMENT-HR	25"X49"	2X6X26" (2)		YES
W04	1	2	STUDY	48"	96"	54 "	48 "	TRIPLE CASEMENT-LH/LH/RH	55"X49"	2X10X58" (2)		YES
W05	2	2	BALCONY/STUDY	0"	96"	28 "	96 "	FIXED GLASS	29"X97"	2X6X30" (2)		YES
W06	1	2	MASTER BATH	48"	96"	36 "	48 "	SINGLE CASEMENT-HR	37"X49"	2X6X40" (2)		YES
W07	2	2	MASTER BATH	48"	96"	24 "	48 "	SINGLE CASEMENT-HR	25"X49"	2X6X26" (2)		YES
W08	1	2	MASTER BATH	36"	96"	72 "	60 "	FIXED GLASS	73"X61"	2X10X76" (2)		YES
W09	1	2	MASTER BATH	72"	96"	36 "	24 "	SINGLE AWNING	37"X25"	2X6X40" (2)		YES
W10	2	2	MASTER BDRM	48"	96"	20 "	48 "	SINGLE CASEMENT-HR	21"X49"	2X6X24" (2)		YES
W11	1	2	MASTER BDRM	48"	96"	54 "	48 "	FIXED GLASS	56"X49"	2X6X58" (2)		YES
W12	1	2	KITCHEN/ DINING	48"	96"	24 "	48 "	SINGLE CASEMENT-HR	25"X49"	2X6X26" (2)		YES
W13	1	2	KITCHEN/ DINING	48"	96"	60 "	48 "	DOUBLE CASEMENT-LH/LH/RH	61"X49"	2X6X64" (2)		YES
W14	1	2	KITCHEN/ DINING/KITCHEN/ DINING	48"	96"	48 "	48 "	SINGLE CASEMENT-HR	49"X49"	2X6X50" (2)		YES

REGISTERED PROFESSIONAL ENGINEER
JYH-RONG YANG
No. C 48655
Exp. 06/30/22
CIVIL
STATE OF CALIFORNIA
Jerry Yang, P.E.; G.E.

REVISION TABLE

NUMBER	DATE	REVISED BY	DESCRIPTION
1	06.22.22	EDS	REVISION 1

ELITE DESIGN STUDIO

PHAM RESIDENCE
16190 WOOD ACRES RD
LOS GATOS CA 95030

FIRST FLOOR PLAN

DATE: 7/11/22

SCALE: 1/4" = 1'0"

SHEET: A 4.0

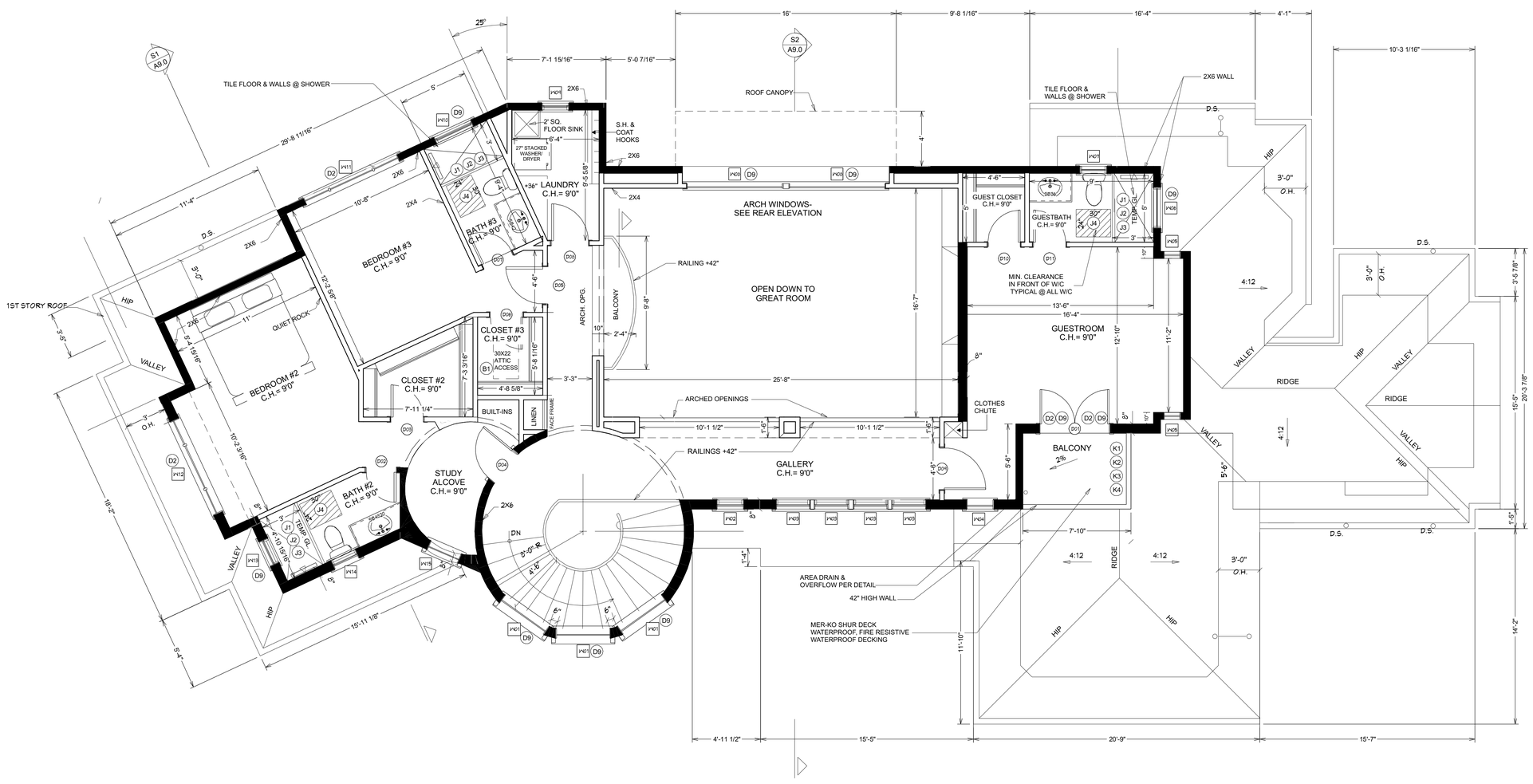

SECOND FLOOR PLAN= 1/4" = 1'0"

LEGEND

- WOOD DECKING
- EXTERIOR TILE
- A1 — BUILDING CODE NOTE
- W1 — WINDOW SCHEDULE LABEL NUMBER
- D1 — DOOR SCHEDULE LABEL NUMBER
- S1 / A9.0 — SECTION LABEL
- 2X8 WALL
- 2X6 WALL
- 2x4 WALL
- 1 / A — WILD URBAN INTERFACE CALLOUT

BUILDING CODES

A. VENTILATION

1. LOCATION AND SIZE OF FOUNDATION VENTS TO CONFORM WITH 2019 CRC SECTION R 408.1 AND R 408.2
2. PROVIDE UNDER ROOF CROSS VENTILATION AT THE RATE OF 1/150 OF THE ATTIC AREA PER CRC 2019 R 806.2
3. ALL HABITABLE ROOMS SHALL HAVE AN AGGREGATE GLAZING AREA OF NOT LESS 8% OF THE FLOOR AREA, NATURAL VENTILATION SHALL BE PROVIDED WITH READY ACCESS OR SHALL OTHERWISE BE READILY CONTROLLED PER 2019 CRC R 303.1.
4. PROVIDE CLOTHES DRYWER VENT TO THE OUSIDE PERM CMC 904.3.2

B.ACCESS

1. PROVIDE 22X30 ATTIC ACCESS TO FIRST FLOOR
2. EMERGENCY ESCAPE AND RESCUE OPENINGS SHALL HAVE A SILL HEIGHT OF NOT MORE THAN 44" ABOVE THE FLOOR AND PER SECTION R-310.1.1, ALL EMERGENCY ESCAPE SHALL HAVE A MIN. CLEAR OPENING 5.75Q.FT. WITH A MIN. OF OPENING HEIGHT 24" AND MIN WIDTH 20". 2019 CRC SECTION 310.1.1.2, AND 3.
3. MINIMUM ONE EGRESS DOOR THAT IS HINGED SWINING DOOR WITH MINIMUM CLEAR WIDTH OF 32 INCHES MINIMUM HEIGHT OF 78 INCHES AND OPEN- ABLE FROM THE INSIDE OF THE DWELLING WITH- OUT USE OF KEY, SPECIAL KNOWLEDGE OR EFFORT. CRC SECTION R 311.2
4. THE EXTERIOR LANDING AT THE EXTERIOR DOOR SHALL BE A MAXIMUM OF 7-3/4" BELOW THE TOP OF THE THRESHOLD. CBC 1010.1.5, EXCEPTION 3.
5. MINIMUM 5'X5' LEVEL LANDING, NOT MORE THAN 1" OUT OF PLANE WITH THE IMMEDIATE INTERIOR FLOOR LEVEL WITH AN 18" CLEARANCE AT THE INTERIOR STRIKE EDGE, AS REQUIRED PER CITY TOWN RESIDENTIAL ACCESSIBILITY STANDARDS.
6. ENTRY DOOR SHALL BE READILY OPENABLE FROM THE INSIDE WITHOUT THE USE OF A KEY OR SPECIAL KNOWLEDGE OR EFFORT PER CRC R311.2.

C.FIRE PROTECTION

CARBON MONOXIDE ALARMS ARE REQUIRED. ALARMS TO BE INTERCONNECTED, HAVE TO BE PLACED IN EACH BEDROOM AND JUST OUTSIDE THE IMMEDIATE VINVINITY OF EACH SLEEPINGARA AT EACH LEVEL INLUDING BASEMENTS PER R 315 OF 2019 CRC OUTLETS.
1. INTERIOR AND EXTERIOR – PROVIDE TAMPER RESISTANT OUTLETS IN ALL 125 VOLTS, 15 AND 20 AMP RECEPTACLES FOR ALL AREAS OF SINGLE FAMILY HOME SECTION 408.11 AND 210.52 OF 2019 CEC.
2. BATHROOM OUTLETS – PROVIDE DEDICATED CIRCUIT FOR BATHROOM OUTLETS SECTION 210.11 OF 2019 CEC.
3. DOOR BETWEEN THE GARAGE AND PRIVATE RESIDENCE SHALL BE SELF- CLOSING AND SELF LATCHING PER CRC R 302.5.1. DOOR SHALL BE MIN. 1 3/8" THICK. OR A 20– MINUTE FIRE RATED DOOR PER C.R.C.NOTE AIR BARRIER TO BE TIGHTLY SEALED PER 2019 CGBS CODE
4. PROVIDE MINIMUM1.2"CYPSUM BOARD TO THE GARAGE SIDE FOR SEPARATION BETWEEN GARAGE AND ATTIC SPACE PER CRC TABLE R302.6
5. THE ENCLOSED ACCESSIBLE SPACE UNDER STAIRS SHALL HAVE UNDER– STAIR PROTECTION WITH 1/2 INCH GYPSUM BOARD PER CRC SECTION R302.7

D.GLAZING

1.ALL GLASS AND GLAZING SHALL COMPLY WITH THE U.S. SAFETY STANDARDS FOR ACHITECTURAL GLAZING MATERIALS AND WITH FEDERAL SPECIFICATIONS 2019 CRC R308
2. VERIFY WINDOWS MEET EGRESS REQUIREMENTS PER 2019, SECTION 310.1.1. AT LEAST ONE ESCAPE ROUTE FROM EACH SLEEPING ROOM, 20" MIN. CLEAR WIDTH,24" CLEAR HEIGHT AND 5.7 SQ. FT. CLEAR OPENING; BOTTOM OF CLEAR OPENING HEIGHT SHALL NOT BE MORE THAN 44" ABOVE THE FLOOR.
3. GLAZING IN ANY DOOR OR GLAZING WITH 24" OF ANY DOOR WITHIN 60" OFF FLOORS TO BE TEMPERED GLASS. GLAZING WITHIN 18" OFF THE FLOOR AS PER ORAT ENCLOSED WALLS AT STAIRWAYS SHALLED BE TEMPERED GLASS, PER 2019 CRC SECTION R308.4.5. AND SECTION 308.4.7.
4. DOOR AND PANELS OF SHOWER AND BATHTUB ENCLOSURES SHALL BE FULLY TEMPERED LAMINATED SAFETY GLASS. CRC SECTION R308.4.5
5. WINDOWS WITHIN 60 INCHES ABOVE A STANDING SURFACE AND DRAIN INLET SHALL BE FULLY TEMPERED, LAMINATED SAFETY GLASS OR APPROVED PLASTIC. CRC SECTION R308.4.5
6. OPERATION SHALL BE FROM INSIDE THE ROOM WITHOUT THE USE OF SPECIAL KEYS, TOOLS, OR KNOWLEDGE. CRC R310.1.1
7. WINDOW SILL HEIGHT NO MORE THAN 44" ABOVE THE FINISH FLOOR FOR EGRESS WINDOW. CRC R310.1
8.PER CRC R308.4 GLAZING ADJACENT TO STAIRWAYS , LANDINGS AND RAMPS
WITHIN 36 INCHES HORIZONTALLY OF A WALKING SURFACE WHEN THE EXPOSED SURACE OF THE GLAZING IS LESS THAN 60 INCHES ABOVE THE PLANE OF THE ADJACENT WALKING SURFACE SHALL BE TEMPERED
9. TEMPERED GLASS IN ALL HAZARDOUS LOCATIONS AS REQUIRED BY 2019 CRC SECTIONS R306.1–4. ANY WINDOW OPENINGS MEASURED AT WINDOW SILL THAT IS LOCATED MORE THAN 72" ABOVE THE EXTERIOR FINISHED GRADE AND WINDOW OPENINGS LOCATED LESS THAN 24" ABOVE THE FINISHED FLOOR SHALL EITHER HAVE FIXED GLAZING OR PROTECTIVE GUARDRAIL 2019 CRC R612.2

E. PERFORMANCE

1.ALL HARDWOOD FLOOR TO BE INSTALLED IN ACCORDANCE WITH THE LATEST NOFMA SPECIFICATIONS AND RECOMMENDATIONS.
2. ALL TILE WORK TO BE INSTALLED IN ACCORDANCE WITH THE CURRENT TILE CONTROL OF AMERICA SPECIFICATIONS AND RECOMMENDATIONS.
3. ALL PLUMBING WORK SHALL COMPLY WITH THE UNIFORM CODE, SAFETY ORDERS IF THE STATE OF CALIFORNIA AND ALL LOCAL CODES AND ORDINANCES.
4. ALL ELECTRICAL WORK SHALL CONFORM THE NATIONAL ELECTRIC CODE AND ALL OTHER APPLICABLE CODES AND REQUIREMENTS.
5. ALL HVAC WORK SHALL BE CONFORMANCE WITH THE APPLICABLE CODES, THE UNIFORMMECHANICAL CODE AND THE RECOMMENDED CODES AND ORDINANCES.

F. PLUMBING FIXTURES AND FITTINGS

1. PLUMBING FIXTURES AND FITTINGS SHALL MEET STANDARDS IN TABLE 4.303 OF 2019 CGBS CODE.
2. AUTOMATIC IRRIGATION SYSTEM CONTROLLERS FOR LANDSCAPING PROVIDED BY BUILDER AND INSTALLED AT THE TIME OF INSPECTION SHALL COMPLY WITH CGBS SECTION 4.304
3. PROVIDE WATER HAMMER ARESTOR ON WATER LINES TO ABSORB HIGH PRESSURES RESULTING FROM THE QUICK CLOSING OF QUICK–ACTING VALVES. IT SHALL BE LOCATEDAS CLOSE AS POSSIBLE TO QUICK ACTING–VALVES PER CPC SECTION 609.10.

G. BUILDING MAINTENANCE AND OPERATION

1.AT THE TIME OF FINAL INSPECTION, A MANUAL, COMPACT DISC, M WEB BASED REFERENCE OF OTHER MEDIA ACCEPTABLE TO THE ENFORCING AGENCY SHALL BE PLACED IN THE BUILDING PER 2019 CGBS SECTION 4.410, NO. 1,2,7,8
2. PROPERTY IDENTIFICATION SIZE TO BE CLEARLY VISIBLE AND LECIBLE FROM THE ADJACENT PUBLIC WAY OR STREET. ADDRESS LETTER NUMBERS SHALL BE MINIMUM 4 INCHES HIGH, WITH A MINIMUM STROKE WIDTH OF 1/2 INCH, AND SHALL CONTRAST WITH THEIR BACKGROUND

H. FIREPLACES

ANY INSTALLED GAS FIREPLACE SHALL BE A DIRECT VENT SEALED–COMBUSTION TYPE AND SHALL COMPLY WITH U.S. EPA PHASE II EMISSION LIMITS WHERE APPLICABLE. PER 2019 CGBS, SECTION 4.503 (IF APPLICABLE).

I. POLLUTANT CONTROL

1. DUCT OPENING AND MECHANICAL, EQUIPMENT SHALL BE COVERED AND PROTECTED DURING CONSTRUCTION PER 2019 CGBS SECTION 4.504.1 AND 4.502.2 ADHESIVES, SEALANTS AND CAULKING MATERIAL SHALL MEET REQUIREMENTS PER 2019 CGBS, SECTION 4.502.1.
2. PAINTS AND COATINGS SHALL COMPLY WITH VOC LIMITS IN TABLE-1 OF THE ARB ARCHITECTURAL SUGGESTED CONTROL, MEASURE AS SHOWN ON TABLE 4.504.3 PER 2019 CGBS SECTION 4.504.2.2 AND VERIFICATION COMPLIANCE SHALL BE PROVIDED PER 2019 CGBS SECTION 4.504.2.4

J. BATHROOM

1. SHOWER /TUB WALLS TO SPECIFY A SMOOTH, HARD, NONABSORBENT SURFACE CERAMIC TILE OVER A MOISUTRE RESISTANT UNDERLAYMENT CLASS MAY GYMPSUM BACKER TO A HEIGHT OF 72" ABOVE THE DRAIN INLET. WATER RESISTANT GYPSUM BACKING BOARD SHALL NOT BE USED OVER A VAPOR RETARDER IN SHOWER OR BATHTUB COMPARTMENTS. CRC R307.2
2. 2×8 WOODEN BACKING IN ALL BATHROOM WALLS AT WATER CLOSET ,SHOWER, AND BATHTUB LOCATED AT 34 " FROM THE FLOOR TO CENTER OF BACKING, SUITABLE FOR ADDITION OF GRAB BARS.
3. REQUIRED CLEARANCE AT WATER CLOSETS– MINIMUM 30 INCHES WIDE CLEAR SPACE AT WATER CLOSET EXTENDING AT LEAST 24 INCHES IN FRONT OF THE WATER CLOSET IS REQUIRED CPC 402.5
4. SHOWERS SHALL HAVE A MINIMUM 22 INCHES DOOR FOR EGRESS CPC 408.5

K. BALCONIES AND DECKS

1. WATERPROOF MEMBRANE SHALL BE BALCONY ASSEMBLY 1 BY SHULTER SYSTEMS OR EQUAL INSTALLS PER MANUFACTURER ICC–ES–ESR–2467
2. TILE O/ GROUT O/ WITH WATERPROOF MEMBRANE. SLOPE TO DRAIN TYPICAL.
3. COMBINATION 4" DRAIN WITH OVERFLOW DRAIN 2" MINIMUM ABOVE R.D. SET IN ROOF RECESS TYPICAL.
4. GUARDRAIL SHALL A MIN HEIGHT OF 42" AND SHALL MEET OPENING LIMITATIONS WHICH ALLOW PASSAGE OF A SPHERE 4" PER SECTION R– 312.3]

WILDAND URBAN INTERFACE REQUIREMENTS

A. Provide Class A roof per Section R937.5. Provide A noncombustible (tile or metal) or Class 'A' roofing assembly is required in SRA – Very High Fire Hazard Severity Zones.

B. Provide roof valleys and gutters per Section R337.5. Where valley flashing is installed, the flashing shall be not less than 0.019-inch (0.48 mm) No. 26 gage galvanized sheet corrosion-resistant metal installed over not less than one layer of minimum 72- pound (32.4 kg) mineral-surfaced nonperforated cap sheet complying with ASTM D3909, at least 36-inch-wide (914 mm) running the full length of the valley. Roof gutters shall be provided with the means to prevent the accumulation of leaves and debris in the gutter.

C. Attic ventilation should be protected per Section R337.6, eave or cornice vents are not allowed unless the products complying to exceptions of Section R337.6.3 are used. Ventilation openings for enclosed attics, enclosed eave soffit spaces, enclosed rafter spaces formed where ceilings are applied directly to the underside of roof rafters, and underfloor ventilation openings shall be fully covered with Wildland Flame and Ember Resistant (WUI) vents approved and listed by the California State Fire Marshal, or WUI vents listed to ASTM E2886. An exception allows vent 1/8" openings on top of sloped roofs that are corrosion-resistant, noncombustible wire mesh or equivalent.

D. Provide eave protections per Section R337.7.4 and 337.7.5. The exposed underside of enclosed roof eaves having either a boxed-in roof eave soffit with a horizontal underside, or sloping rafter tails with an exterior covering applied to the underside of the rafter tails, shall be protected by one layer of 5/8-inch Type X gypsum sheathing applied behind an exterior covering on the underside of the rafter tails or soffit.

E. Provide protections for exterior walls per Section R337.7.3. Provide noncombustible, listed ignition-resistant materials, 5/8" Type X gypsum sheathing behind exterior covering, exterior portion of 1-hr assembly.

F. Provide protections for exterior openings including doors and windows per Section R337.8. Windows to be constructed of multipane glazing with a minimum of one tempered pane meeting the requirements of Section R308 Safety Glazing. Exterior surface or cladding of exterior doors shall be tested to meet the performance requirements of Section R337.7.3.1 when tested in accordance with ASTM E2707

G. The underside of appendages (including undersides of porches), and floor projections should be protected per Section R337.7.6 through R337.7.9. Walking surfaces of decks, porches, balconies and stairs within 10 feet of the building must be constructed of noncombustible, fire-retardant treated or heavy-timber construction. Alternate materials can be used if they are ignition-resistant and pass performance requirements specified by the State Fire Marshal

H. Decking shall be protected per Section R337.9. The exposed underfloors, underside of cantilevered and overhanging decks, balconies and similar appendages shall be non-combustible, ignition resistant, 5/8" Type X gypsum sheathing behind exterior covering, exterior portion of 1-hr assembly, meet performance criteria SFM Standard 12-7A-3 or be enclosed to grade.

I. Accessory buildings and structures should be protected per Section R337.10. Accessory buildings that are less than 120 square feet in floor area and are located more than 30 feet but less than 50 feet from an applicable building shall be constructed of noncombustible materials.

WINDOW AND DOOR SCHEDULE

WINDOW SCHEDULE

NUMBER	QTY	FLOOR	ROOM NAME	SILL HEIGHT	UNIT	FLOOR	WIDTH	HEIGHT	DESCRIPTION	U/O	HEADER	EGRESS	TEMPERED
W01	1	3	STAIRWELL	60"	96"	3	48"	96"	FIXED GLASS	40"X61"	2X6X52" (2)		YES
W02	1	3	GALLERY	60"	96"	3	48"	96"	DOUBLE HUNG	47"X61"	2X6X52" (2)		
W03	4	3	GALLERY	66"	96"	3	30"	30"	FIXED GLASS	31"X31"	2X6X34" (2)		
W04	1	3	GUESTROOM	54"	96"	3	24"	42"	SINGLE CASEMENT-HR	25"X43"	2X6X28" (2)		
W05	2	3	GUESTROOM	12"	48"	3	15"	48"	DOUBLE HUNG	16"X49"	2X6X19" (2)		
W06	1	3	GUESTBATH	72"	96"	3	36"	42"	SINGLE AWNING	37"X25"	2X6X40" (2)		YES
W07	1	3	GUEST BATH	54"	96"	3	24"	42"	SINGLE CASEMENT-HR	25"X43"	2X6X28" (2)		
W08	2	3	GREAT ROOM	12"	96"	3	24"	24"	FIXED GLASS	85"X25"	2X10X88" (2)		YES
W09	1	3	LAUNDRY	54"	96"	3	24"	42"	SINGLE CASEMENT-HR	25"X43"	2X6X28" (2)		
W10	1	3	BATH #3	72"	96"	3	36"	24"	SINGLE AWNING	37"X25"	2X6X40" (2)		YES
W11	1	3	BEDROOM #3	48"	96"	3	90"	48"	TRIPLE CASEMENT-CHLRHIR	91"X49"	2X10X94" (2)	YES	
W12	1	3	BEDROOM #2	36"	96"	3	90"	60"	TRIPLE CASEMENT-CHLRHIR	91"X61"	2X10X94" (2)	YES	
W13	1	3	BATH #2	72"	96"	3	24"	24"	SINGLE CASEMENT-HR	25"X25"	2X6X28" (2)		YES
W14	1	3	BATH #2	60"	96"	3	24"	36"	SINGLE CASEMENT-HR	25"X37"	2X6X28" (2)		
W15	1	3	STUDY	48"	96"	3	50"	48"	SINGLE CASEMENT-HR	51"X49"	2X6X34" (2)		

DOOR SCHEDULE

NUMBER	QTY	FLOOR	EXIN	ROOM NAME	WIDTH	HEIGHT	DESCRIPTION	R/O	HEADER	THICKNESS
D01	1	3	EX	GUESTROOM/BALCONY	60"	96"	EXT. DOUBLE HINGED-GLASS PANEL	62"X99"	2X8X65" (2)	1 3/8"
D02	1	3	IN	BEDROOM #2/BATH #2	26"	96"	HINGED-DOOR P04	28"X98.1/2"	2X6X31" (2)	1 3/4"
D03	1	3	IN	BEDROOM #2/CLOSET #2	28"	96"	HINGED-DOOR P04	30"X98.1/2"	2X6X33" (2)	1 3/4"
D04	1	3	IN	STUDY/STAIRWELL	32"	96"	HINGED-DOOR P04	34"X98.1/2"	2X6X37" (2)	1 3/8"
D05	1	3	IN	BEDROOM #3/HALL	32"	96"	HINGED-DOOR P04	34"X98.1/2"	2X6X37" (2)	1 3/4"
D06	1	3	IN	CLOSET #3/BEDROOM #3	28"	96"	HINGED-DOOR P04	30"X98.1/2"	2X6X33" (2)	1 3/8"
D07	1	3	IN	BEDROOM #3/BATH #3	28"	96"	HINGED-DOOR P04	30"X98.1/2"	2X6X33" (2)	1 3/8"
D08	1	3	IN	LAUNDRY/HALL	32"	96"	HINGED-PANEL	34"X98.1/2"	2X6X37" (2)	1 3/4"
D09	1	3	IN	GUESTROOM/GALLERY	36"	96"	HINGED-DOOR P04	38"X98.1/2"	2X6X41" (2)	1 3/8"
D10	1	3	IN	GUEST CLOSET/GUESTROOM	28"	96"	HINGED-DOOR P04	30"X98.1/2"	2X6X33" (2)	1 3/4"
D11	1	3	IN	GUEST BATH/GUESTROOM	28"	96"	HINGED-DOOR P04	30"X98.1/2"	2X6X33" (2)	1 3/4"

REGISTERED PROFESSIONAL ENGINEER
JYH-RONG YANG
No. C 48655
Exp. 06/30/22
STATE OF CALIFORNIA
CIVIL
Jerry Yang, P.E.; G.E.

REVISION TABLE

NUMBER	DATE	REVISED BY	DESCRIPTION
1	06.22.22	EDS	REVISION 1

ELITE DESIGN STUDIO

PHAM RESIDENCE
16190 WOOD ACRES RD
LOS GATOS CA 95030

SECOND FLOOR PLAN

DATE: 7/11/22

SCALE: 1/4" = 1'0"

SHEET: A 5.0

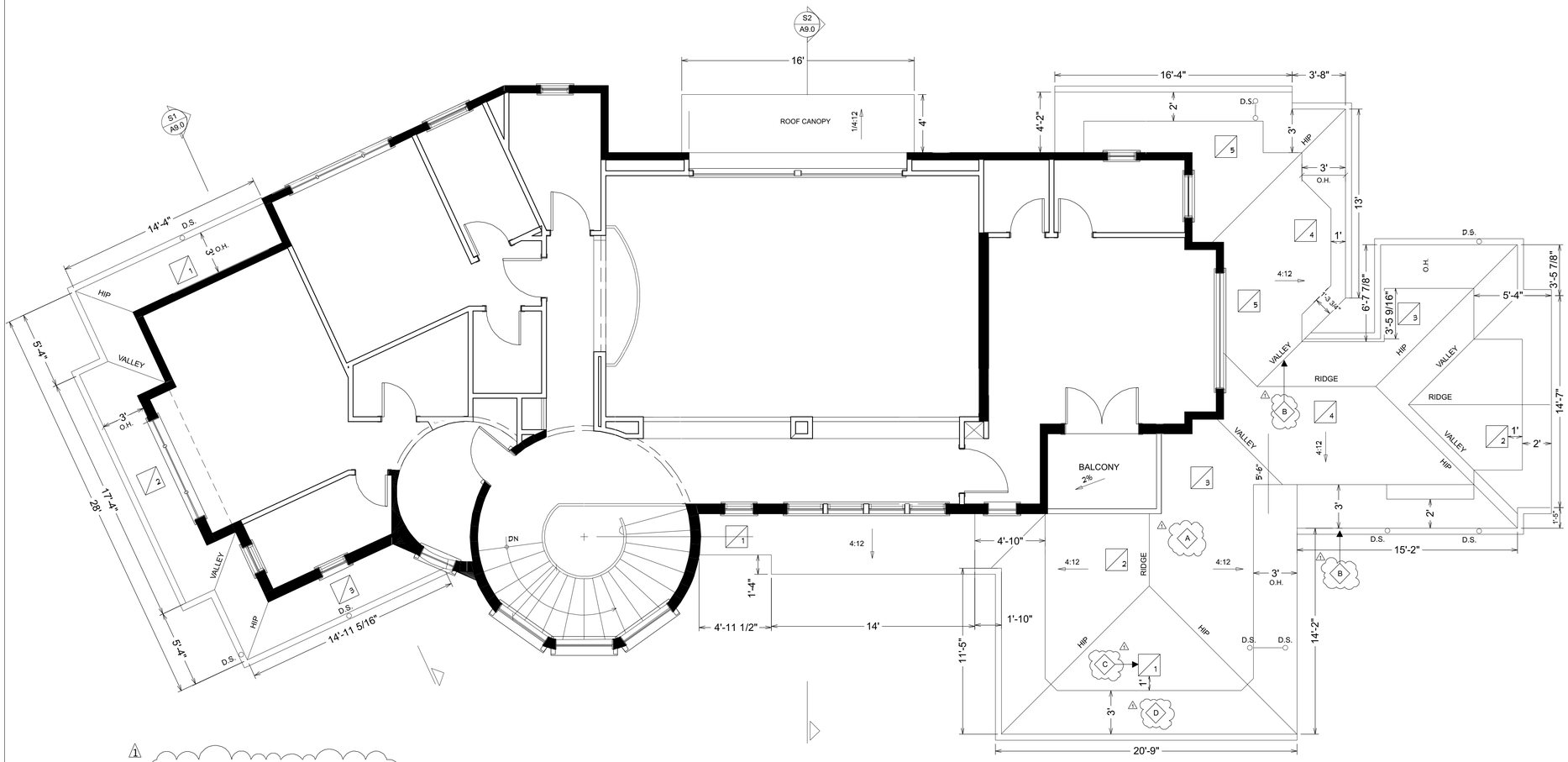

1 A WILDLAND URBAN INTERFACE REQUIREMENT CALLOUT

BUILDING CODES

PROVIDE CLASS "A" MATERIAL- 50 YEAR MISSION CLAY TILE ROOF PER CODE AND MANUFACTURER.

PROPOSED ROOF SLOPE- 4:12

OVERHANGS: VARIES 3'0", 2'0" AND 1'0"

INSTALL ROOFING MATERIAL W/ 30 FELT OVER 1/2" CDX PLYWOOD ROOF SHEATHING WITH 2X RAFTERS, MINIMUM R-30 INSULATION AND 2X CEILING JOISTS AND 1/2" ROOF MATERIAL SELECTION SHALL BE DURABLE AND NON-COMBUSTIBLE TO COMPLY WITH 2019 CGBS CODE

PROPOSED ADDITION VENTILATION CALCULATION=

RIGHT SIDE ROOF COVERAGE SF/ 150= 963 SF /150= 6.42 SF

HIGH VENT AREA / MIN 50% OF TOTAL REQUIRED:
PROVIDE #(5) 0' HAGINS CLAY "S" VENT W/
0.67 S.F. FREE FLOW AREA EACH
= 3.35 S.F. ATTIC HIGH VENT AREA PROVIDED

LOW VENT AREA / MIN 50% OF TOTAL REQUIRED:
PROVIDE #(5) 0' HAGINS CLAY "S" VENT W/
0.67 S.F. FREE FLOW AREA EACH
= 3.35 S.F. ATTIC HIGH VENT AREA PROVIDED

HIGH VENT AREA + LOW VENT AREA= 6.70 SF SF > MINIMUM 6.42 SF

LEFT SIDE ROOF COVERAGE SF/ 150= 163 SF /150= 1.08 SF

VENT AREA / MIN 50% OF TOTAL REQUIRED:
PROVIDE #(3) 0' HAGINS CLAY "S" VENT W/
0.67 S.F. FREE FLOW AREA EACH
= 2.01 S.F. ATTIC HIGH VENT AREA PROVIDED

VENT AREA= 2.01 SF > MINIMIMM 1.08 SF

1

WILDAND URBAN INTERFACE REQUIREMENTS

A. Provide Class A roof per Section R337.5. Provide A noncombustible (tile or metal) or Class 'A' roofing assembly is required in SRA - Very High Fire Hazard Severity Zones.

B. Provide roof valleys and gutters per Section R337.5. Where valley flashing is installed, the flashing shall be not less than 0.019-inch (0.48-mm) No. 26 gage galvanized sheet corrosion-resistant metal installed over not less than one layer of minimum 72- pound (32.4 kg) mineral-surfaced nonperforated cap sheet complying with ASTM D3909, at least 36-inch-wide (914 mm) running the full length of the valley. Roof gutters shall be provided with the means to prevent the accumulation of leaves and debris in the gutter.

C. Attic ventilation should be protected per Section R337.6, eave or cornice vents are not allowed unless the products complying to exceptions of Section R337.6.3 are used. Ventilation openings for enclosed attics, enclosed eave soffit spaces, enclosed rafter spaces formed where ceilings are applied directly to the underside of roof rafters, and underfloor ventilation openings shall be fully covered with Wildland Flame and Ember Resistant (WUI) vents approved and listed by the California State Fire Marshal, or WUI vents listed to ASTM E2886. An exception allows vent 1/8" openings on top of sloped roofs that are corrosion-resistant, noncombustible wire mesh or equivalent.

D. Provide eave protections per Section R337.7.4 and 337.7.5. The exposed underside of enclosed roof eaves having either a boxed-in roof eave soffit with a horizontal underside, or sloping rafter tails with an exterior covering applied to the underside of the rafter tails, shall be protected by one layer of 5/8-inch Type X gypsum sheathing applied behind an exterior covering on the underside of the rafter tails or soffit.

E. Provide protections for exterior walls per Section R337.7.3. Provide noncombustible, listed ignition-resistant materials, 5/8" Type X gypsum sheathing behind exterior covering, exterior portion of 1-hr assembly.

F. Provide protections for exterior openings including doors and windows per Section R337.8. Windows to be constructed of multipane glazing with a minimum of one tempered pane meeting the requirements of Section R308 Safety Glazing. Exterior surface or cladding of exterior doors shall be tested to meet the performance requirements of Section R337.7.3.1 when tested in accordance with ASTM E2707

G. The underside of appendages (including undersides of porches), and floor projections should be protected per Section R337.7.6 through R337.7.9. Walking surfaces of decks, porches, balconies and stairs within 10 feet of the building must be constructed of noncombustible, fire-retardant treated or heavy-timber construction. Alternate materials can be used of they are ignition-resistant and pass performance requirements specified by the State Fire Marshal

H. Decking shall be protected per Section R337.9. The exposed underfloors, underside of cantilevered and overhanging decks, balconies and similar appendages shall be non-combustible, ignition resistant, 5/8" Type X gypsum sheathing behind exterior covering, exterior portion of 1-hr assembly, meet performance criteria SFM Standard 12-7A-3 or be enclosed to grade.

I. Accessory buildings and structures should be protected per Section R337.10. Accessory buildings that are less than 120 square feet in floor area and are located more than 30 feet but less than 50 feet from an applicable building shall be constructed of noncombustible materials.

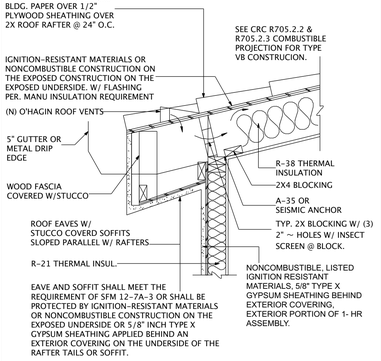

WILDLAND URBAN INTERFACE DETAIL
NO SCALE

1 A6.0 WILDLAND URBAN INTERFACE DETAIL

ROOF FLOOR PLAN= 1/4" = 1'0"

REGISTERED PROFESSIONAL ENGINEER
JYH-RONG YANG
No. C 48655
Exp. 06/30/22
CIVIL
STATE OF CALIFORNIA

Jerry Yang, P.E.; G.E.

REVISION TABLE			
NUMBER	DATE	REVISED BY	DESCRIPTION
1	06.22.22	EDS	REVISION 1

ELITE DESIGN STUDIO

PHAM RESIDENCE
16190 WOOD ACRES RD
LOS GATOS CA 95030

FIRST FLOOR
ROOF PLAN

DATE:
7/11/22

SCALE:

SHEET:
A 6.0

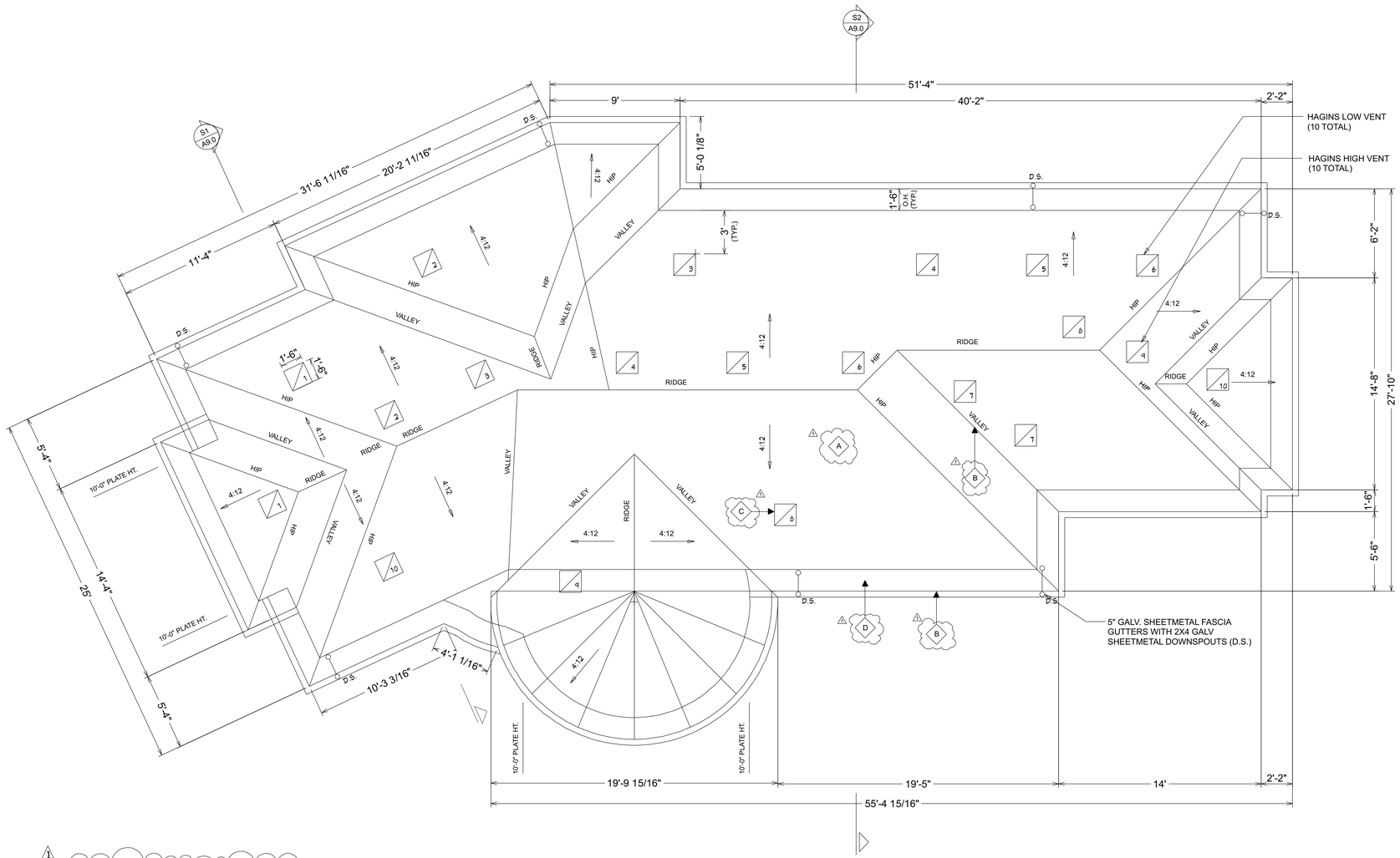

1 A WILDLAND URBAN INTERFACE REQUIREMENT CALLOUT

BUILDING CODES

PROVIDE CLASS "A" MATERIAL- 50 YEAR MISSION CLAY TILE ROOF PER CODE AND MANUFACTURER.

PROPOSED ROOF SLOPE- 4:12

OVERHANGS: VARIES 3'0", 2'0" AND 1'0"

INSTALL ROOFING MATERIAL W/ 30 FELT OVER 1/2" CDX PLYWOOD ROOF SHEATHING WITH 2X RAFTERS, MINIMUM
R-30 INSULATION AND 2X CEILING JOISTS AND 1/2" ROOF MATERIAL SELECTION SHALL BE DURABLE AND NON- COMBUSTIBLE TO COMPLY WITH 2019 CGBS CODE

ROOF VENTILATION
1853 S.F. / 150 = 12.3 S.F. VENT AREA REQUIRED

HIGH VENT AREA / MIN 50% OF TOTAL REQUIRED:
PROVIDE #(10) 0' HAGINS CLAY "S" VENT W/
0.67 S.F. FREE FLOW AREA EACH
= 6.67 S.F. ATTIC HIGH VENT AREA PROVIDED

LOW VENT AREA / MIN 50% OF TOTAL REQUIRED:
PROVIDE #(10) 0' HAGINS CLAY "S" VENT W/
0.67 S.F. FREE FLOW AREA EACH
= 6.67 S.F. ATTIC HIGH VENT AREA PROVIDED

HIGH VENT AREA + LOW AREA VENT= 13.34 SF > MINIMUM 12.30 SF

1

WILDAND URBAN INTERFACE REQUIREMENTS

A. Provide Class A roof per Section R337.5. Provide A noncombustible (tile or metal) or Class 'A' roofing assembly is required in SRA - Very High Fire Hazard Severity Zones.

B. Provide roof valleys and gutters per Section R337.5. Where valley flashing is installed, the flashing shall be not less than 0.019-inch (0.48 mm) No. 26 gage galvanized sheet corrosion-resistant metal installed over not less than one layer of minimum 72- pound (32.4 kg) mineral-surfaced nonperforated cap sheet complying with ASTM D3909, at least 36-inch-wide (914 mm) running the full length of the valley. Roof gutters shall be provided with the means to prevent the accumulation of leaves and debris in the gutter.

C. Attic ventilation should be protected per Section R337.6, eave or cornice vents are not allowed unless the products complying to exceptions of Section R337.6.3 are used. Ventilation openings for enclosed attics, enclosed eave soffit spaces, enclosed rafter spaces formed where ceilings are applied directly to the underside of roof rafters, and underfloor ventilation openings shall be fully covered with Wildland Flame and Ember Resistant (WUI) vents approved and listed by the California State Fire Marshal, or WUI vents listed to ASTM E2886. An exception allows vent 1/8" openings on top of sloped roofs that are corrosion-resistant, noncombustible wire mesh or equivalent.

D. Provide eave protections per Section R337.7.4 and 337.7.5. The exposed underside of enclosed roof eaves having either a boxed-in roof eave soffit with a horizontal underside, or sloping rafter tails with an exterior covering applied to the underside of the rafter tails, shall be protected by one layer of 5/ 8-inch Type X gypsum sheathing applied behind an exterior covering on the underside of the rafter tails or soffit.

E. Provide protections for exterior walls per Section R337.7.3. Provide noncombustible, listed ignition-resistant materials, 5/8" Type X gypsum sheathing behind exterior covering, exterior portion of 1-hr assembly.

F. Provide protections for exterior openings including doors and windows per Section R337.8. Windows to be constructed of multipane glazing with a minimum of one tempered pane meeting the requirements of Section R308 Safety Glazing. Exterior surface or cladding of exterior doors shall be tested to meet the performance requirements of Section R337.7.3.1 when tested in accordance with ASTM E2707.

G. The underside of appendages (including undersides of porches), and floor projections should be protected per Section R337.7.6 through R337.7.9. Walking surfaces of decks, porches. balconies and stairs within 10 feet of the building must be constructed of noncombustible, fire-retardant treated or heavy-timber construction. Alternate materials can be used of they are ignition-resistant and pass performance requirements specified by the State Fire Marshal

H. Decking shall be protected per Section R337. 9. The exposed underfloors, underside of cantilevered and overhanging decks, balconies and similar appendages shall be non-combustible, ignition resistant, 5/8" Type X gypsum sheathing behind exterior covering, exterior portion of 1-hr assembly, meet performance criteria SFM Standard 12-7A-3 or be enclosed to grade.

I. Accessory buildings and structures should be protected per Section R337.10. Accessory buildings that are less than 120 square feet in floor area and are located more than 30 feet but less than 50 feet from an applicable building shall be constructed of noncombustible materials.

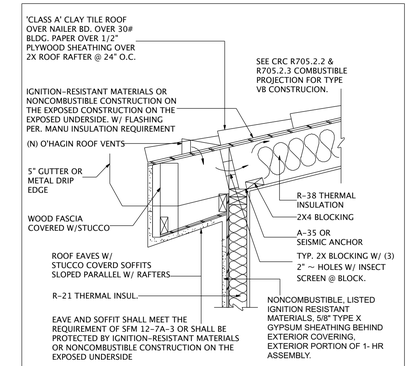

WILDLAND URBAN INTERFACE DETAIL
NO SCALE

1 A6.1 WILDLAND URBAN INTERFACE DETAIL

ROOF FLOOR PLAN= 1/4" = 1'0"

REGISTERED PROFESSIONAL ENGINEER
JYH-RONG YANG
No. C 48655
Exp. 06/30/22
CIVIL
STATE OF CALIFORNIA

Jerry Yang, P.E.; G.E.

REVISION TABLE			
NUMBER	DATE	REVISED BY	DESCRIPTION
1	06.22.22	EDS	REVISION 1

ELITE DESIGN STUDIO

PHAM RESIDENCE
16190 WOOD ACRES RD
LOS GATOS CA 95030

SECOND FLOOR
ROOF PLAN

DATE: 7/11/22

SCALE: 1/4" = 1'0"

SHEET: A 6.1



FRONT ELEVATION 1/4" = 1'0"

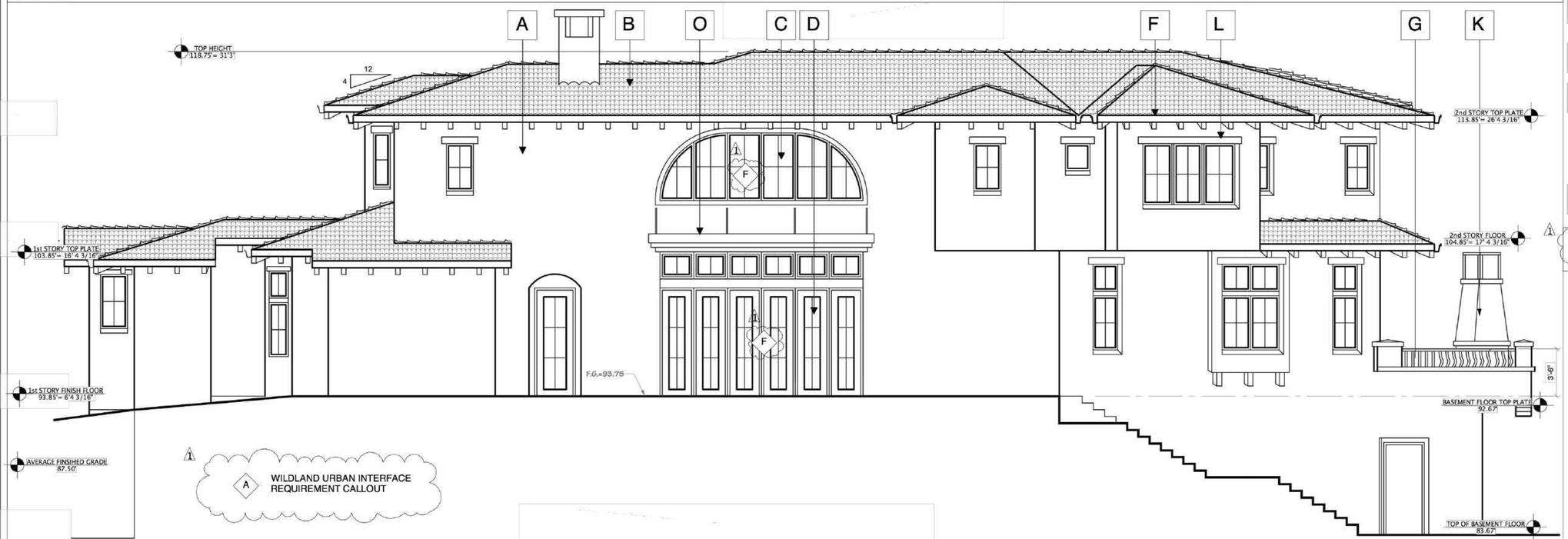

REAR ELEVATION 1/4" = 1'0"

ELEVATION NOTES

- A — EXTERIOR WALL MATERIAL: 3 COATS SMOOTH STUCCO FINISH - EXTERIOR WALL FINISH WITH METAL LATH, TYVEK BUILDING PAPER (2 LAYERS OF BUILDING PAPER) OVER METAL LATHIN, AND PLYWOOD EXTERIOR WITH 2 X 16" O.C. STUDS AND THERMAL INSULATION (R-13 OR R-19) WEEP SCREED TO BE LOCATED MIN. 2 INCHES ABOVE PAVED AREAS.
- B — PROVIDE CLASS "A" MATERIAL- 50 YEAR CLAY MISSION TILE ROOF PER CODE AND MANUFACTURER.
  PROPOSED ROOF SLOPE- 4:12
  OVERHANGS: VARIES 3'0", 2'0" AND 1'0"
  INSTALL ROOFING MATERIAL W/ 30 FELT OVER 1/ 2" CDX PLYWOOD ROOF SHEATHING WITH 2X RAFTERS, MINIMUM R-30 INSULATION AND 2X CEILING JOISTS AND 1/2" ROOF MATERIAL SELECTION SHALL BE DURABLE AND NON- COMBUSTIBLE TO COMPLY WITH 2019 CBSC CODE
- C — 400 SERIES ANDERSON DOORS, COLOR DARK BRONZE, LRV-10.41 TRIM- BENJAMIN MOORE/CSP-270/ DARK CHOCALATE/ LRV-10.41
- D — 400 SERIES ANDERSON WINDOWS, COLOR DARK BRONZE, LRV-10.41 TRIM- BENJAMIN MOORE/CSP-270/ DARK CHOCALATE/ LRV-10.41
- E — CORONADO STONE/ TUSCAN VILLA/ COLOR- PRARIE MOSS/ LRV-28.42
- F — 2x4 WOOD CORBELS
- G — ENTRY KEYSTONE
- H — 42" HIGH WROUGHT IRON HANDRAILS
- I — STONE CAPS
- J — 4" MOLDING
- K — EXTERIOR WOOD FIREPLACE
- L — 4" WINDOW WOOD LINTELS
- M — CONCRETE STEPS / TILED STEPS: STAIRS CONSTRUCTION MUST MEET MINIMUM REQUIREMENTS AS SET BY CURRENT CODES FOR MIN. RISE AND RUN CBC 1003.3.3
- N — CRAWL SPACE VENTILATION CALCULATION=
  CRAWL SPACE COVERAGE SF/ 150= 879 SF / 150= 5.86 SF
  #7 (N) 6" x 14" VENTS @.58 N.F.V.= 3.92 SF
  #1 (N) 30"x22" CRAWL SPACE VENT @ 4.58 SF= 4.58 SF
  3.92 SF + 4.58 SF= 8.50 >5.86 SF MINIMUM REQUIRED
- O — ROOF CANOPY

WILDAND URBAN INTERFACE REQUIREMENTS

A. Provide Class A roof per Section R337.5. Provide A noncombustible (tile or metal) or Class 'A' roofing assembly is required in SRA - Very High Fire Hazard Severity Zones.

B. Provide roof valleys and gutters per Section R337.5. Where valley flashing is installed, the flashing shall be not less than 0.019-inch (0.48 mm) No. 26 gage galvanized sheet corrosion-resistant metal installed over not less than one layer of minimum 72- pound (32.4 kg) mineral-surfaced nonperforated cap sheet complying with ASTM D3909, at least 36-inch-wide (914 mm) running the full length of the valley. Roof gutters shall be provided with the means to prevent the accumulation of leaves and debris in the gutter.

C. Attic ventilation should be protected per Section R337.6, eave or cornice vents are not allowed unless the products comprying to exceptions of Section R337.6.3 are used. Ventilation openings for enclosed attics, enclosed eave soffit spaces, enclosed rafter spaces formed where ceilings are applied directly to the underside of roof rafters, and underfloor ventilation openings shall be fully covered with Wildland Flame and Ember Resistant (WUI) vents approved and listed by the California State Fire Marshal, or WUI vents listed to ASTM E2886. An exception allows vent. 1/8" openings on top of sloped roofs that are corrosion-resistant, noncombustible wire mesh or equivalent.

D. Provide eave protections per Section R337.7.4 and 337.7.5. The exposed underside of enclosed roof eaves having either a boxed-in roof eave soffit with a horizontal underside, or sloping rafter tails with an exterior covering applied to the underside of the rafter tails, shall be protected by one layer of 5/8-inch Type X gypsum sheathing applied behind an exterior covering on the underside of the rafter tails or soffit.

E. Provide protections for exterior walls per Section R337.7.3. Provide noncombustible, listed ignition-resistant materials, 5/8" Type X gypsum sheathing behind exterior covering, exterior portion of 1-hr assembly.

F. Provide protections for exterior openings including doors and windows per Section R337.8. Windows to be constructed of multipane glazing with a minimum of one tempered pane meeting the requirements of Section R308 Safety Glazing. Exterior surface or cladding of exterior doors shall be tested to meet the performance requirements of Section R337.7.3.1 when tested in accordance with ASTM E2707

G. The underside of appendages (including undersides of porches), and floor projections should be protected per Section R337.7.6 through R337.7.5. Walking surfaces of decks, porches, balconies and stairs within 10 feet of the building must be constructed of noncombustible, fire-retardant treated or heavy-timber construction. Alternate materials can be used of they are ignition-resistant and pass performance requirements specified by the State Fire Marshal

H. Decking shall be protected per Section R337.9. The exposed undersfloors, underside of cantilevered and overhanging decks, balconies and similar appendages shall be non-combustible, ignition resistant, 5/8" Type X gypsum sheathing behind exterior covering, exterior portion of 1-hr assembly, meet performance criteria SFM Standard 12-7A-3 or be enclosed to grade.

I. Accessory buildings and structures should be protected per Section R337.10. Accessory buildings that are less than 120 square feet in floor area and are located more than 50 feet but less than 50 feet from an applicable building shall be constructed of noncombustible materials.

REGISTERED PROFESSIONAL ENGINEER JYH-RONG YANG No. C 48655 Exp. 06/30/22 CIVIL STATE OF CALIFORNIA
Jerry Yang, P.E.; G.E.

REVISION TABLE			
NUMBER	DATE	REVISED BY	DESCRIPTION
1	06.22.22	EDS	REVISION 1
2	05.12.24	EDS	REVISION 2

ELITE DESIGN STUDIO

PHAM RESIDENCE
16190 WOOD ACRES RD
LOS GATOS CA 95030

FRONT AND REAR ELEVATIONS

DATE: 7/11/22

SCALE: 1/4" = 1'0"

SHEET: A 7.0

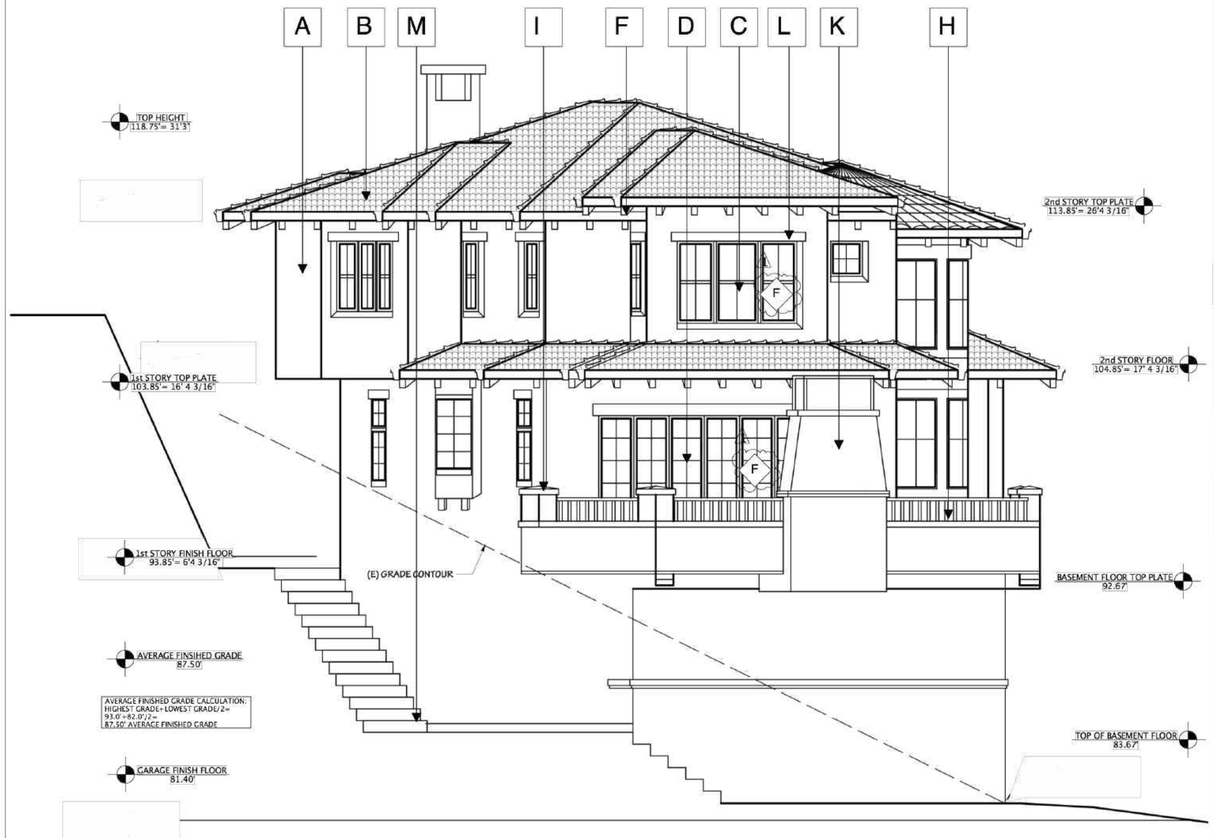

LEFT SIDE ELEVATION= 1/4" = 1'0"

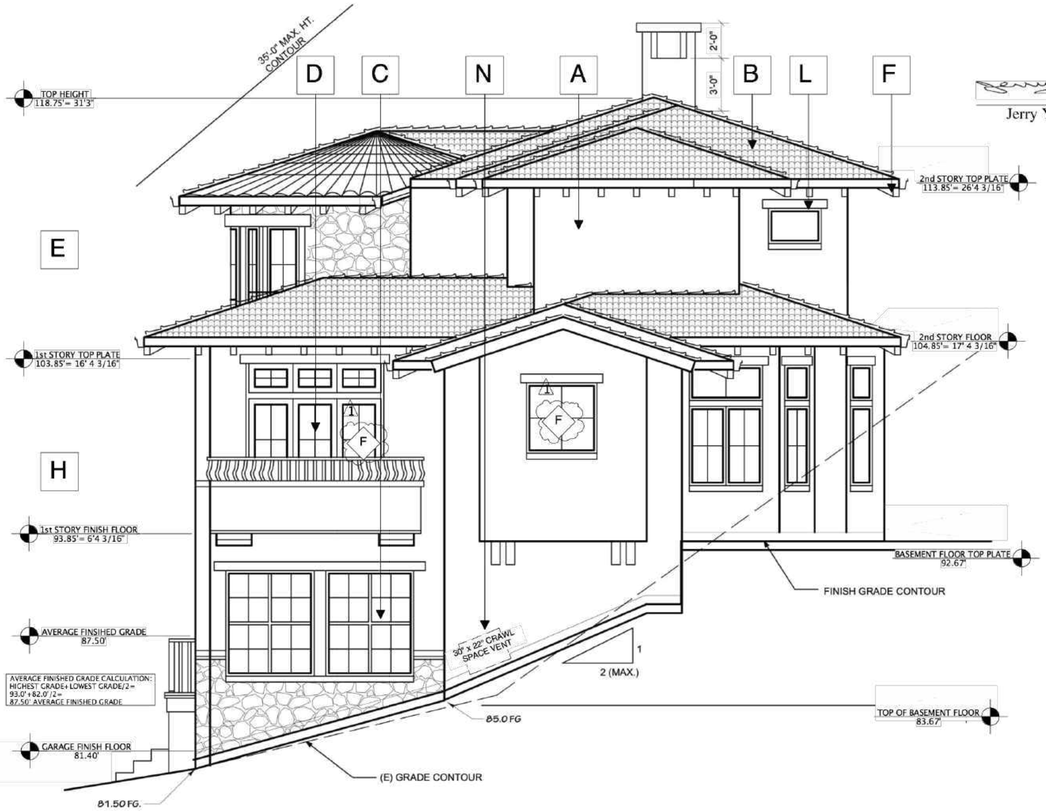

RIGHT SIDE ELEVATION= 1/4"= 1'0"

ELEVATION NOTES

A. EXTERIOR WALL MATERIAL:
3 COATS SMOOTH STUCCO FINISH -
EXTERIOR WALL FINISH WITH METAL LATH, TYVEK BUILDING PAPER (2 LAYERS OF BUILDING PAPER) OVER METAL LATHIN, AND PLYWOOD EXTERIOR WITH 2 X 16" O.C. STUDS AND THERMAL INSULATION (R-13 OR R-19) WEEP SCREED TO BE LOCATED MIN. 2 INCHES ABOVE PAVED AREAS.
PAINT COLOR- BENJAMIN MOORE/ 1047/ DEER PATH/ LRV-39.82

B. PROVIDE CLASS "A" MATERIAL- 50 YEAR CLAY MISSION TILEROOF PER CODE AND MANUFACTURER.

PROPOSED ROOF SLOPE- 4:12

OVERHANGS: VARIES 3'0", 2'0" AND 1'0"

INSTALL ROOFING MATERIAL W/ 30 FELT OVER 1/ 2" CDX PLYWOOD ROOF SHEATHING WITH 2X RAFTERS, MINIMUM
R-30 INSULATION AND 2X CEILING JOISTS AND 1/2" ROOF MATERIAL SELECTION SHALL BE DURABLE AND NON- COMBUSTIBLE TO COMPLY WITH 2019 CGBS CODE.
MCA CLAY TILE ROOF/ F22 BURNT SIENNA COWN FLASH
SOLAR REFLECTANCE 0.31

C. 400 SERIES ANDERSON DOORS, COLOR DARK BRONZE, LRV-10.41
TRIM- BENJAMIN MOORE/CSP-270/ DARK CHOCALATE/ LRV-10.41

D. 400 SERIES ANDERSON WINDOWS, COLOR DARK BRONZE, LRV-10.41
TRIM- BENJAMIN MOORE/CSP-270/ DARK CHOCALATE/ LRV-10.41

E. CORONADO STONE/ TUSCAN VILLA/ COLOR- PRARIE MOSS/ LRV-28.42

F. 2x4 WOOD CORBELS

G. ENTRY KEYSTONE

H. 42" HIGH WROUGHT IRON HANDRAILS

I. STONE CAPS

J. 4" MOLDING

K. EXTERIOR WOOD FIREPLACE

L. 4" WINDOW WOOD LINTELS

M. CONCRETE STEPS / TILED STEPS:
STAIRS CONSTRUCTION MUST MEET MINIMUM REQUIREMENTS AS SET BY CURRENT CODES FOR MIN. RISE AND RUN CBC 1003.3.3

N. CRAWL SPACE VENTILATION CALCULATION=
CRAWL SPACE COVERAGE SF/ 150= 879 SF /150= 5.86 SF
#7 (N) 6" x 14" VENTS @.58 N.F.V.= 3.92 SF
#1 (N) 30"x22" CRAWL SPACE VENT@ 4.58 SF= 4.58 SF
3.92 SF + 4.58 SF= 8.50 >5.86 SF MINIMUM REQUIRED

O. ROOF CANOPY

WILDAND URBAN INTERFACE REQUIREMENTS

A. Provide Class A roof per Section R337.5. Provide A noncombustible (tile or metal) or Class 'A' roofing assembly is required in ERA - Very High Fire Hazard Severity Zones.

B. Provide roof valleys and gutters per Section R337.5. Where valley flashing is installed, the flashing shall be not less than 0.019-inch (0.48 mm) No. 26 gage galvanized sheet corrosion-resistant metal installed over not less than one layer of minimum 72- pound (32.4 kg) mineral-surfaced nonperforated cap sheet complying with ASTM D3909, at least 36-inch-wide (914 mm) running the full length of the valley. Roof gutters shall be provided with the means to prevent the accumulation of leaves and debris in the gutter.

C. Attic ventilation should be protected per Section R337.6, eave or cornice vents are not allowed unless the products complying to exceptions of Section R337.6.3 are used. Ventilation openings for enclosed attics, enclosed eave soffit spaces, enclosed rafter spaces formed where ceilings are applied directly to the underside of roof rafters, and underfloor ventilation openings shall be fully covered with Wildland Flame and Ember Resistant (WUI) vents approved and listed by the California State Fire Marshal, or WUI vents listed to ASTM E2886. An exception allows vent 1/8" openings on top of sloped roofs that are corrosion-resistant, noncombustible wire mesh or equivalent.

D. Provide eave protections per Section R337.7.4 and 337.7.5. The exposed underside of enclosed roof eaves having either a boxed-in roof eave soffit with a horizontal underside, or sloping rafter tails with an exterior covering applied to the underside of the rafter tails, shall be protected by one layer of 5/8-inch Type X gypsum sheathing applied behind an exterior covering on the underside of the rafter tails or soffit.

E. Provide protections for exterior walls per Section R337.7.3. Provide noncombustible, listed ignition-resistant materials, 5/8" Type X gypsum sheathing behind exterior covering, exterior portion of 1-hr assembly.

F. Provide protections for exterior openings including doors and windows per Section R337.8. Windows to be constructed of multipane glazing with a minimum of one tempered pane meeting the requirements of Section R308 Safety Glazing. Exterior surface or cladding of exterior doors shall be tested to meet the performance requirements of Section R337.7.5.1 when tested in accordance with ASTM E2707

G. The underside of appendages (including undersides of porches), and floor projections should be protected per Section R337.7.6 through R337.7.9. Walking surfaces of decks, porches, balconies and stairs within 10 feet of the building must be constructed of noncombustible, fire-retardant treated or heavy-timber construction. Alternate materials can be used of they are ignition-resistant and pass performance requirements specified by the State Fire Marshal

H. Decking shall be protected per Section R337.9. The exposed underfloors, underside of cantilevered and overhanging decks, balconies and similar appendages shall be non-combustible, ignition resistant, 5/8" Type X gypsum sheathing behind exterior covering, exterior portion of 1-hr assembly, meet performance criteria SFM Standard 12-7A-3 or be enclosed to grade.

I. Accessory buildings and structures should be protected per Section R337.10. Accessory buildings that are less than 120 square feet in floor area and are located more than 30 feet but less than 50 feet from an applicable building shall be constructed of noncombustible materials.

A WILDLAND URBAN INTERFACE REQUIREMENT CALLOUT

Jerry Yang, P.E.; G.E.

REVISION TABLE

NUMBER	DATE	REVISED BY	DESCRIPTION
1	06.22.22	EDS	REVISION 1
2	05.12.24	EDS	REVISION 2

ELITE DESIGN STUDIO

PHAM RESIDENCE
16190 WOOD ACRES RD
LOS GATOS CA 95030

SIDE ELEVATIONS

DATE: 7/11/22

SCALE:

SHEET: A 8.0

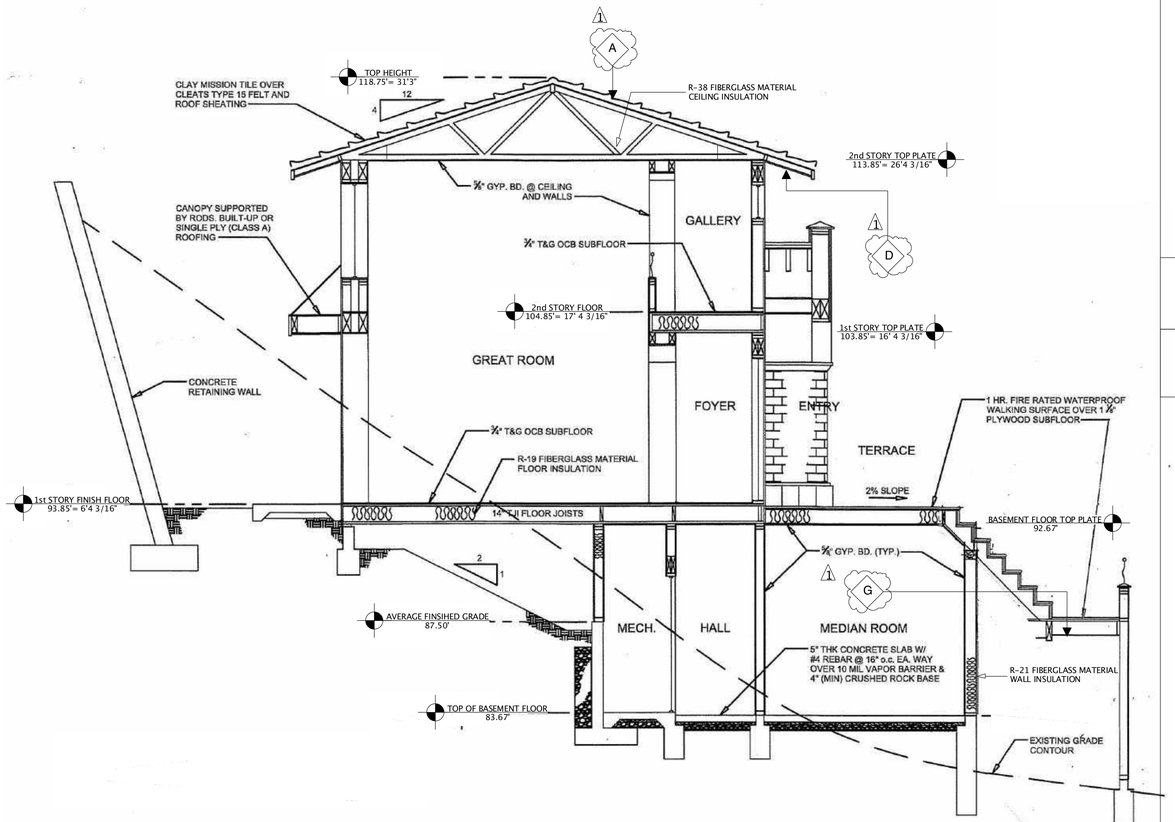

S2- SECTION 2= 1/4" = 1'0"

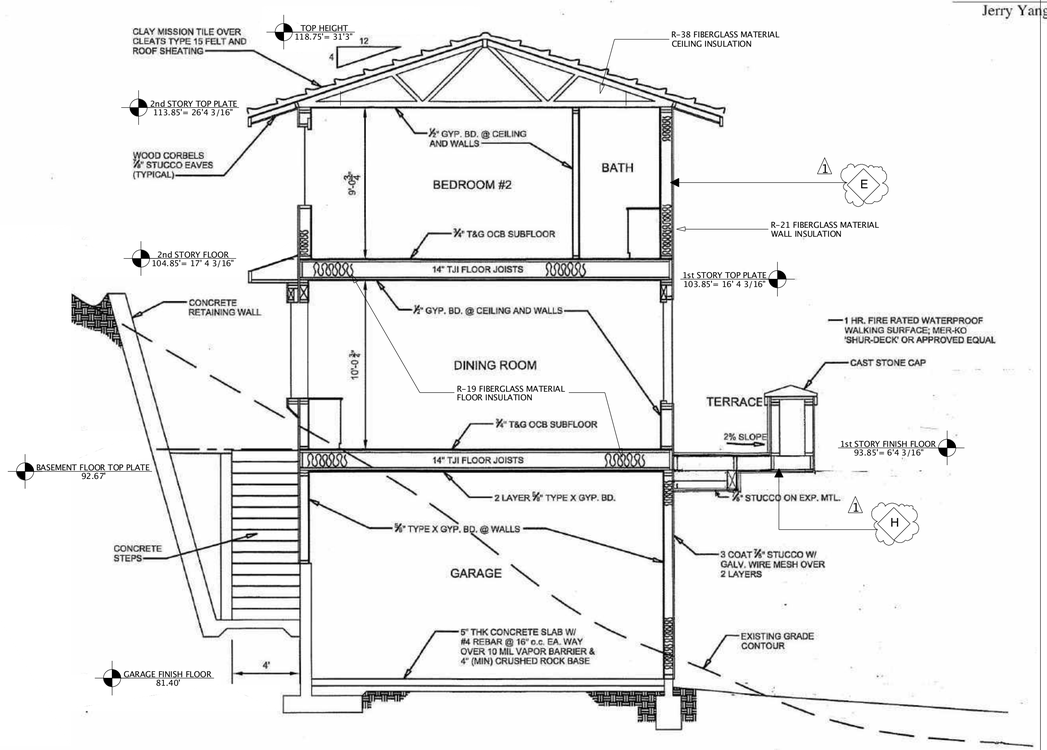

S1- SECTION 1= 1/4" = 1'0"

WILDAND URBAN INTERFACE REQUIREMENTS

A. Provide Class A roof per Section R337.5. Provide A noncombustible (tile or metal) or Class 'A' roofing assembly is required in SRA - Very High Fire Hazard Severity Zones.

B. Provide roof valleys and gutters per Section R337.5. Where valley flashing is installed, the flashing shall be not less than 0.019-inch (0.48 mm) No. 26 gage galvanized sheet-corrosion-resistant metal installed over not less than one layer of minimum 72- pound (32.4 kg) mineral-surfaced nonperforated cap sheet complying with ASTM D3909, at least 36-inch-wide (914 mm) running the full length of the valley. Roof gutters shall be provided with the means to prevent the accumulation of leaves and debris in the gutter.

C. Attic ventilation should be protected per Section R337.6, eave or cornice vents are not allowed unless the products complying to exceptions of Section R337.6.3 are used. Ventilation openings for enclosed attics, enclosed eave soffit spaces, enclosed rafter spaces formed where ceilings are applied directly to the underside of roof rafters, and underfloor ventilation openings shall be fully covered with Wildland Flame and Ember Resistant (WUI) vents approved and listed by the California State Fire Marshal, or WUI vents listed to ASTM E2886. An exception allows vent 1/8" openings on top of sloped roofs that are corrosion-resistant, noncombustible wire mesh or equivalent.

D. Provide eave protections per Section R337.7.4 and 337.7.5. The exposed underside of encbsed roof eaves having either a boxed-in roof eave soffit with a horizontal underside, or sloping rafter tails with an exterior covering applied to the underside of the rafter tails, shall be protected by one layer of 5/8-inch Type X gypsum sheathing applied behind an exterior covering on the underside of the rafter tails or soffit.

E. Provide protections for exterior walls per Section R337.7.3. Provide noncombustible, listed ignition-resistant materials. 5/8" Type X gypsum sheathing behind exterior covering, exterior portion of 1-hr assembly.

F. Provide protections for exterior openings including doors and windows per Section R337.8. Windows to be constructed of multipane glazing with a minimum of one tempered pane meeting the requirements of Section R308 Safety Glazing. Exterior surface or cladding of exterior doors shall be tested to meet the performance requirements of Section R337.7.3.1 when tested in accordance with ASTM E2707

G. The underside of appendages (including undersides of porches), and floor projections should be protected per Section R337.7.6 through R337.7.9. Walking surfaces of decks, porches, balconies and stairs within 10 feet of the building must be constructed of noncombustible, fire-retardant treated or heavy-timber construction. Alternate materials can be used of they are ignition-resistant and pass performance requirements specified by the State Fire Marshal

H. Decking shall be protected per Section R337.9. The exposed underfloors, underside of cantilevered and overhanging decks, balconies and similar appendages shall be non-combustible, ignition resistant, 5/8" Type X gypsum sheathing behind exterior covering, exterior portion of 1-hr assembly, meet performance criteria SFM Standard 12-7A-3 or be enclosed to grade.

I. Accessory buildings and structures should be protected per Section R337.10. Accessory buildings that are less than 120 square feet in floor area and are located more than 30 feet but less than 50 feet from an applicable building shall be constructed of noncombustible materials.

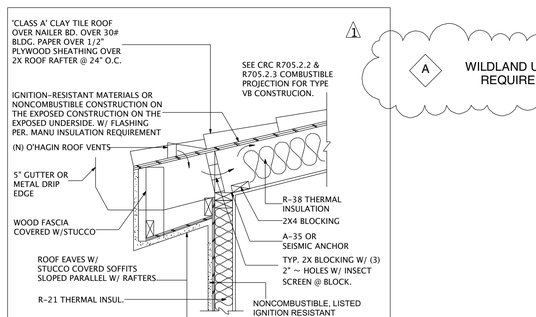

WILDLAND URBAN INTERFACE DETAIL
NO SCALE

1 / A9.0 WILDLAND URBAN INTERFACE DETAIL

A WILDLAND URBAN INTERFACE REQUIREMENT CALLOUT

REGISTERED PROFESSIONAL ENGINEER
JYH-RONG YANG
No. C 48655
Exp. 06/30/22
CIVIL
STATE OF CALIFORNIA

Jerry Yang, P.E.; G.E.

REVISION TABLE			
NUMBER	DATE	REVISED BY	DESCRIPTION
1	06.22.22	EDS	REVISION 1

ELITE DESIGN STUDIO

PHAM RESIDENCE
16190 WOOD ACRES RD
LOS GATOS CA 95030

ARCHITECTURAL SECTIONS

DATE: 7/11/22

SCALE: 1/4" = 1'0"

SHEET: A 9.0

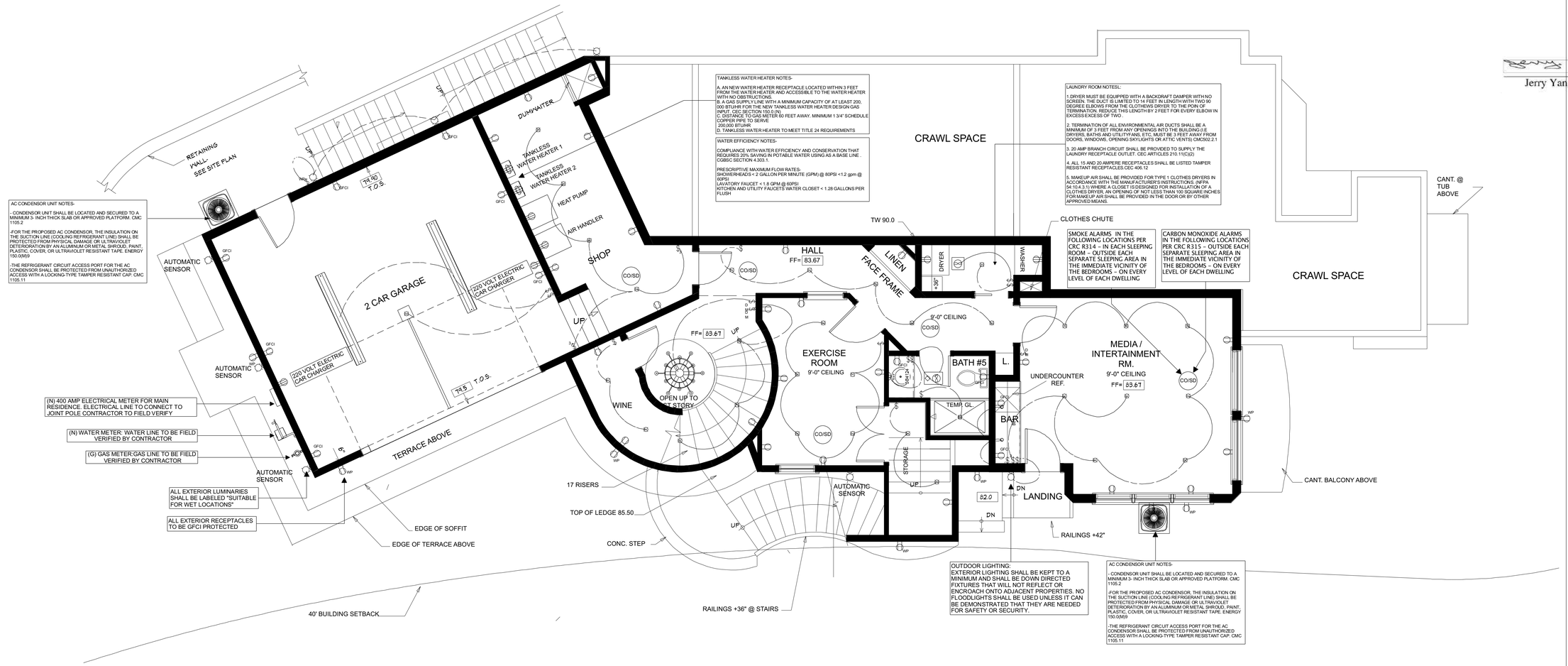

BASEMENT ELECTRICAL PLANS 1/4" = 1'0"

ELECTRICAL - DATA - AUDIO LEGEND

SYMBOL	DESCRIPTION
	Ceiling Fan
	Ventilation Fans: Ceiling Mounted, Wall Mounted
	Ceiling Mounted Light Fixtures: Surface/Pendant, Recessed, Heat Lamp, Low Voltage
	Wall Mounted Light Fixtures: Flush Mounted, Wall Sconce
	Chandelier Light Fixture
	Fluorescent Light Fixture
	240V Receptacle
	110V Receptacles: Duplex, Weather Proof, GFCI
	Switches: Single Pole, Weather Proof, 3-Way, 4-Way
	Switches: Dimmer, Timer
AV Control	Audio Video: Control Panel, Switch
	Speakers: Ceiling Mounted, Wall Mounted
	Wall Jacks: CAT5, CAT5 + TV, TV/Cable
	Telephone Jack
	Intercom
	Thermostat
	Door Chime, Door Bell Button
	Carbon Monoxide and Smoke Detectors
	Electrical Breaker Panel

ELECTRICAL GENERAL NOTES

1. LOCATION OF POWER UNIT AND OUTLETS TO BE FIELD LOCATED BY OWNER. PROVIDE ALLOWANCE FOR ONE OUTLET PER 450 SQ. FT.

2. VERIFY ELECTRICAL REQUIREMENTS FOR WATER HEATERS AND MECHANICAL EQUIPMENT.

3. PROVIDE GASKETS ON ELECTRICAL OUTLETS AND SWITCH BOXES AT ALL EXTERIOR AND SOUND INSULATED WALLS.

4. PROVIDE FOUNDATION GROUND ELECTRODE AND ELECTRICAL SERVICE LOCATION

5. INSTALL GROUND FAULT INTERRUPTOR OUTLETS AT EXTERIOR, GARAGE, BATHS, KITCHEN AND LAUNDRY.

6. GENERAL LIGHTING AT BATHS AND KITCHEN TO HAVE FLORESCENT LAMPS, COLOR TEMP. PER OWNER SPECS.

7. RECESSED CEILING LIGHTS ARE (IC) RATED.

8. PROVIDE DUAL SWITCHING THROUGHOUT THE ROOMS IN COMPLIANCE TO ENERGY CODE PER SECTION 131- B.

9. PROVIDE TAMPER RESISTANT OUTLETS IN ALL 125-VOLT, 15, AND 20 AMP RECEPTACLES FOR ALL AREAS OF SINGLE FAMILY HOME (EXTERIOR TOO) SECTION 406.11 AND 210 CEC.

10. PROVIDE A LISTED WEATHER RESISTANT OUTLETS FOR ALL OUTLETS IN WET LOCATIONS. TH IS IN ADDITION TO WEATHER PROOF CAP. SECTION 406.6 OF 2019 CEC

11. CEC ARTICLES 210.11 C (1) AND 210.52 B PROVIDE TWO SMALL APPLIANCES BRANCH CIRCUITS ARE REQUIRED FOR THE KITCHEN AND ARE LIMITED TO SUPPLYING WALL AND COUNTER SPACE OUTLETS FOR THE KITCHEN, PANTRY, BREAKFAST ROOM, DINING ROOM, AND SIMILAR AREAS. NOTE: THE CIRCUITS CANNOT SERVE OUTSIDE PLUGS, RANGE HOOD, DISPOSALS, DISHWASHERS, OR MICROWAVES- ONLY THE REQUIRED COUNTERTOP WALL OUTLETS INCLUDING THE REFRIDGERATOR.

12. KITCHEN LIGHTING- ALL LIGHTS SHALL BE HIGH EFFIANCY LUMINAIRES OR COMPLY WITH THE EXCEPTION AS FOLLOWS:
1. AT LEAST 50% OF THE INSTALLED WATTAGE MUST BE HIGH EFFICIANCY.
2. HIGH EFFICIANCY LIGHTING MUST BE SWITCHED SEPARATELY FROM LOW EFFICIANCY LIGHTING, CLEARLY SHOW AND IDENTIFY SWITCH TYPES AND LOCATIONS ON THE PLANS.
NOTE: LIGHTING IN AREAS ADJACENT TO THE KITCHEN, INCLUDING BUT NOT LIMITED TO DINING AND NOOK AREAS ARE CONSIDERED KITCHEN LIGHTING. IF THEY ARE NOT SEPARTELY SWITCHED FROM KITCHEN LIGHTING.

13. BATHROOM, GARAGE, LAUNDRY ROOM, AND UTILITY ROOM LIGHTING:
ALL LIGHTS SHALL BE HIGH EFFICIANCY LUMINAIRES OR COMPLY WITH THE EXCEPTIONS AS FOLLOWS:
1. PROVIDE A MANUAL- ON-OCCUPANCY SENSOR AND MOTION THAT COMPLIES WITH CEC SECTION 119 (D) AND SHALL NO THAVE A CONTROL THAT ALLOWS THE
LUMINAIRES TO BE TURNED OUT ON AUTOMATICALLY OR THAT HAS AN OVERRIDE ALLOWING THE LUMINAIRES TO BE ALWAYS ON.
2.PROVIDE DEDICATED CURCUIT FOR THE BATHROOM OUTLETS OER SECTION B 210. 11C OF THE 2019 CEC.3. FAN LIGHTS MUST HAVE SEPARATE SWITCHES. THIS INCLUDES FAN/ LIGHTS COMBO, UNLESS EXCEPTION FROM CODE IS USED (FAN CONTRIBUTING FOR
EXTENDED PERIOD OF TIME IS USED. INDICATE AS SUCH, AND IT MUST BE A LISTED PRODUCT FOR SUCH USE FOR A RECOGNIZEDAPPROVAL LISTING AGENCY. PER 2019 ENERGY CODE SECTION 105 (K) (B). 4. ALL OUTLETS IN GARAGE TO BE GFCI INCLUDING THE GARAGE OPENER AT CEILING.

14. OUTDOOR LIGHTING:
ALL LIGHTS TO BE PERMANENTLY MOUNTED TO THE RESIDENTIAL BUILDING OR TO OTHER BUILDINGS ON THE SAME LOT ARE HIGH EFFICIANCY LUMINAIRES OR COMPLY WITH THE EXCEPTIONS AS FOLLOWS: 1. LIGHTS TO BE CONTROLLED BY A MOTION SENSOR WITH INTEGRAL PHOTO CONTROL. 2. LIGHTING NOT ATTACHED TO THE BUILDING (IE. LANDSCAPE LIGHTING ARE NOT EXEMPT).

15. BEDROOMS, HALLWAYS, STAIRS, DINING ROOMS, ETC... LIGHTING :
ALL LIGHTS IN THESE ROOMS ARE HIGH EFFICANCY LUMINAIRES OR COMPLY WITH TEH EXCEPTION AS FOLLOWS:
1. PROVIDE DIMMER SWITCH
2. PROVIDE MANUAL ON OCCUPANCY SENSOR AND MOTION SENSOR THAT COMPLIES WITH CEC SECTION 119 (D) AND SHALL NOT AHVE A CONTROL THAT ALLOW THE LUMINAIRES TO BE TURNED ON AUTOMATICALLY OR THAT HAS AN OVERRIDE ALLOWING THE LUMINAIRES TO BE ALWAYS ON.
3. CLOSETS LESS THAN 70 SQ. FT. ARE EXEMPT FROM LIGHTING REQUIREMENT.
4. INDICATE THAT LUMINAIRES IN CLOSETS SHALL BE LISTED FOR SUCH USE, AND WILL FOLLOW ALL DIMENSIONS CLEARANCES. SURFACE MOUNTED INCANDESCENT REQUIRED 12" CLEARANCE FROM SHELVES AND STORAGE SPACE, SURFACE MOUNTED FLOURESCENT REQUIRE 6" FROM SHELEVES AND STORAGE SPACE.
5. ALL BRANCH CIRCUITS THAT SUPPLY 120- VOLT, SINGLE PHASE, 15- AND 20- AMPERE OUTLETS INSTALLED IN DWELLING UNIT BEDROOM, FAMILY ROOMS, DINING ROOMS, LIVING ROOMS, PARLORS, LIBRARIES, DENS, SUNROOMS, RECREATION ROOMS, CLOSET, HALLWAYS, OR SIMILAR ROOMS, OR AREAS SHALL BE ARC- FAULT CIRCUIT INTERRUPTER (AFCI) PROTECTED PER CEC 210.12 (B)

16. FIRE PROTECTION NOTE:
CARBON MONOXIDE AND SMOKE ALARMS ARE REQUIRED, ALARMS TO BE INTERCONNECTED, HAVE TO BE PLACED IN EACH BEDROOM AND JUST OUTSIDE THE IMMEDIATE VICINITY OF EACH SLEEPING AREA. AT EACH LEVEL, INCLUDING BASEMENTS PER 315 OF 2019 CRC OUTLETS.
1) INTERIOR AND EXTERIOR PROVIDE AMPLE RESISTANT OUTLETS IN ALL 125 VOLT, 15, AND 20 AMP RECEPTACLES FOR ALL AREAS OF SINGLE FAMILY HOME, SECTION 406.11 AND 2019 CEC.
2.) BATHROOM OUTLETS- PROVIDE DEDICATED CIRCUIT FOR BATHROOM OUTLETS SECTION 210. 11 OF 2019 CEC.

CAL GREEN MANDATORY CHECKLIST

4.303.1 Water conserving plumbing fixtures and fittings.
Plumbing fixtures (water closets and urinals) and fittings (faucets and showerheads) installed in residential buildings shall comply with the prescriptive requirements of Sections 4303.1.1 through 4303.1.4.4

4.303.2 Standards for plumbing fixtures and fittings.
Plumbing fixtures and fittings required in Section 4.303.1 shall be installed in accordance with the California PlumbingCode, and shall meet the applicable referenced standards

4.507.2 Heating and air-conditioning system design.
Duct systems are sized, designed, and equipment is selected using the following methods:
1. Establish heat loss and heat gain values according to ANSIIACCA 2 Manual J-2004 or equivalent.
2. Size duct systems according to ANSI! ACCA 1 Manu
al D-2009 or equivalent.
3. Select heating and cooling equipment according to ANSI ACCA 3 Manual S-2004 or equivalent.

702.1 Installer Training.
HVAC system installers are trained and certified in the proper installation of HVAC systems.

702.2 Special Inspection.
Special inspectors employed by the enforcing agency must be qualified and able to demonstrate competence in the discipline they are inspecting.

703.1 Documentation.
Verification of compliance with this code may include construction docu- ments, plans, specifications builder or installer certification, inspection reports, or other methods
acceptable to the enforcing agency which show substantial confomance.

4.506. Exhaust Fans
Exhaust fans terminate outside building are provided in every bathroom

4.507.1
Whole house exhaust fan

4.507.2
Duct system sized and designed per ACCA manual D, J , and S

REGISTERED PROFESSIONAL ENGINEER
JYH-RONG YANG
No. C 48655
Exp. 06/30/22
CIVIL
STATE OF CALIFORNIA

Jerry Yang, P.E.; G.E.

REVISION TABLE

NUMBER	DATE	REVISED BY	DESCRIPTION
1	06.22.22	EDS	REVISION 1

ELITE DESIGN STUDIO

PHAM RESIDENCE
16190 WOOD ACRES RD
LOS GATOS CA 95030

BASEMENT ELECTRICAL PLAN

DATE: 7/11/22

SCALE: 1/4" = 1'0"

SHEET: A 10.0

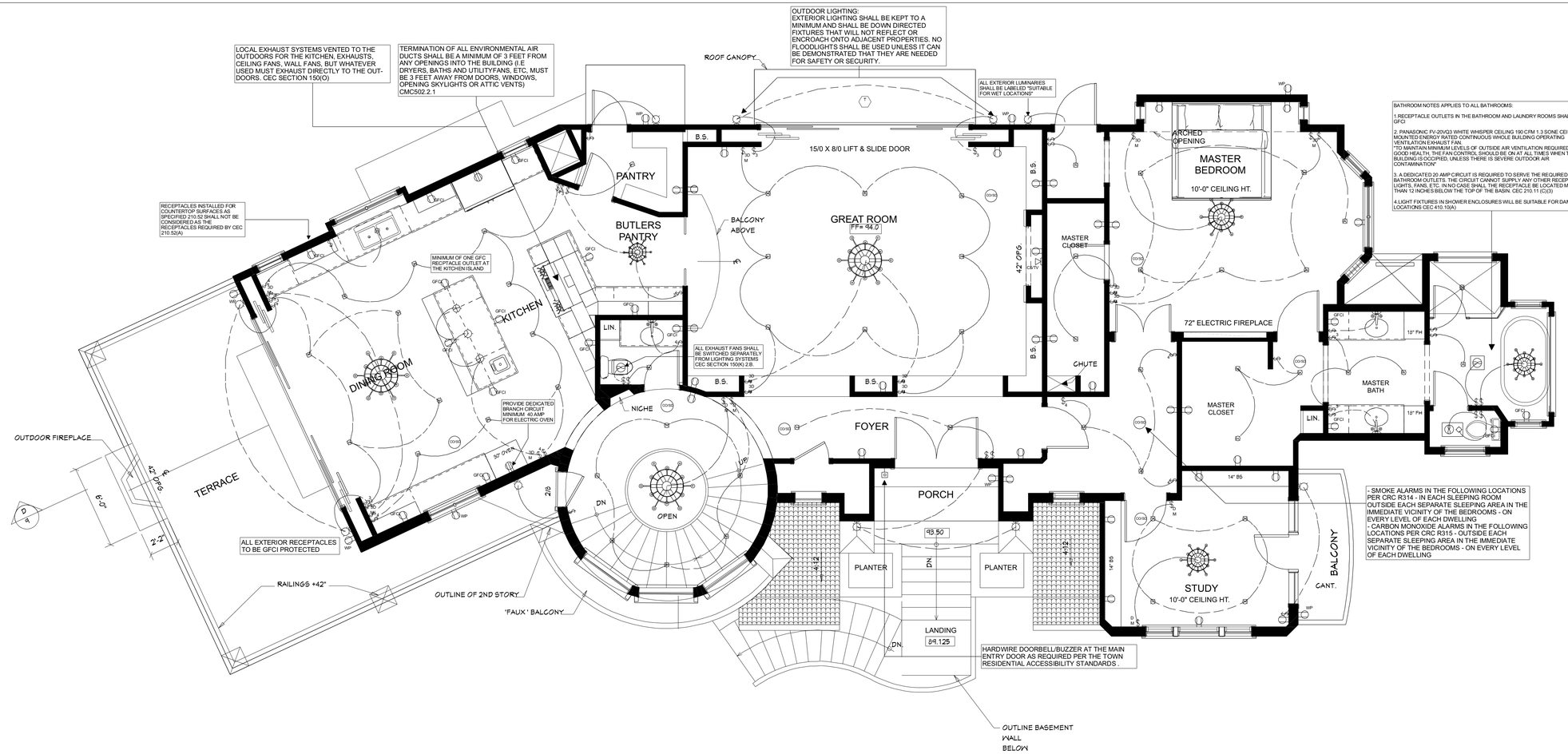

FIRST FLOOR ELECTRICAL PLANS 1/4" = 1'0"

ELECTRICAL - DATA - AUDIO LEGEND

SYMBOL	DESCRIPTION
	Ceiling Fan
	Ventilation Fans: Ceiling Mounted, Wall Mounted
	Ceiling Mounted Light Fixtures: Surface/Pendant, Recessed, Heat Lamp, Low Voltage
	Wall Mounted Light Fixtures: Flush Mounted, Wall Sconce
	Chandelier Light Fixture
	Fluorescent Light Fixture
	240V Receptacle
WP GFCI	110V Receptacles: Duplex, Weather Proof, GFCI
$ $ WP $3 $4	Switches: Single Pole, Weather Proof, 3-Way, 4-Way
DIM $	Switches: Dimmer, Timer
AV Control $	Audio Video: Control Panel, Switch
SP SP	Speakers: Ceiling Mounted, Wall Mounted
CAT5 CAT5/6 TV	Wall Jacks: CAT5, CAT5 + TV, TV/Cable
	Telephone Jack
	Intercom
	Thermostat
	Door Chime, Door Bell Button
CO SD	Carbon Monoxide and Smoke Detectors
EP	Electrical Breaker Panel

ELECTRICAL GENERAL NOTES

1. LOCATION OF POWER UNIT AND OUTLETS TO BE FIELD LOCATED BY OWNER. PROVIDE ALLOWANCE FOR ONE OUTLET PER 450 SQ. FT.

2. VERIFY ELECTRICAL REQUIREMENTS FOR WATER HEATERS AND MECHANICAL EQUIPMENT.

3. PROVIDE GASKETS ON ELECTRICAL OUTLETS AND SWITCH BOXES AT ALL EXTERIOR AND SOUND INSULATED WALLS.

4. PROVIDE FOUNDATION GROUND ELECTRODE AND ELECTRICAL SERVICE LOCATION

5. INSTALL GROUND FAULT INTERRUPTOR OUTLETS AT EXTERIOR, GARAGE, BATHS, KITCHEN AND LAUNDRY.

6. GENERAL LIGHTING AT BATHS AND KITCHEN TO HAVE FLORESCENT LAMPS, COLOR TEMP. PER OWNER SPECS.

7. RECESSED CEILING LIGHTS ARE (IC) RATED.

8. PROVIDE DUAL SWITCHING THROUGHOUT THE ROOMS IN COMPLIANCE TO ENERGY CODE PER SECTION 131- B.

9. PROVIDE TAMPER RESISTANT OUTLETS IN ALL 125-VOLT, 15, AND 20 AMP RECEPTACLES FOR ALL AREAS OF SINGLE FAMILY HOME (EXTERIOR TOO) SECTION 406.11 AND 210 CEC.

10. PROVIDE A LISTED WEATHER RESISTANT OUTLETS FOR ALL OUTLETS IN WET LOCATIONS. TH IS IN ADDITION TO WEATHER PROOF CAP. SECTION 406.6 OF 2019 CEC

11. CEC ARTICLES 210.11 C (1) AND 210.52 B PROVIDE TWO SMALL APPLIANCES BRANCH CIRCUITS ARE REQUIRED FOR THE KITCHEN AND ARE LIMITED TO SUPPLYING WALL AND COUNTER SPACE OUTLETS FOR THE KITCHEN, PANTRY, BREAKFAST ROOM, DINING ROOM, AND SIMILAR AREAS. NOTE: THE CIRCUITS CANNOT SERVE OUTSIDE PLUGS, RANGE HOOD, DISPOSALS, DISHWASHERS, OR MICROWAVES- ONLY THE REQUIRED COUNTERTOP WALL OUTLETS INCLUDING THE REFRIDGERATOR.

12. KITCHEN LIGHTING- ALL LIGHTS SHALL BE HIGH EFFIANCY LUMINAIRES OR COMPLY WITH THE EXCEPTION AS FOLLOWS:
1. AT LEAST 50% OF THE INSTALLED WATTAGE MUST BE HIGH EFFICIANCY.
2. HIGH EFFICIANCY LIGHTING MUST BE SWITCHED SEPARATELY FROM LOW EFFICIANCY LIGHTING, CLEARLY SHOW AND IDENTIFY SWITCH TYPES AND LOCATIONS ON THE PLANS.
NOTE: LIGHTING IN AREAS ADJACENT TO THE KITCHEN, INCLUDING BUT NOT LIMITED TO DINING AND NOOK AREAS ARE CONSIDERED KITCHEN LIGHTING. IF THEY ARE NOT SEPARTELY SWITCHED FROM KITCHEN LIGHTING.

13. BATHROOM, GARAGE, LAUNDRY ROOM, AND UTILITY ROOM LIGHTING:
ALL LIGHTS SHALL BE HIGH EFFICIANCY LUMINAIRES OR COMPLY WITH THE EXCEPTIONS AS FOLLOWS:
1. PROVIDE A MANUAL- ON-OCCUPANCY SENSOR AND MOTION THAT COMPLIES WITH CEC SECTION 119 (D) AND SHALL NO THAVE A CONTROL THAT ALLOWS THE
LUMINAIRES TO BE TURNED OUT ON AUTOMATICALLY OR THAT HAS AN OVERRIDE ALLOWING THE LUMINAIRES TO BE ALWAYS ON.
2.PROVIDE DEDICATED CURCUIT FOR THE BATHROOM OUTLETS OER SECTION B 210. 11C OF THE 2019 CEC.3. FAN LIGHTS MUST HAVE SEPARATE SWITCHES. THIS INCLUDES FAN/ LIGHTS COMBO, UNLESS EXCEPTION FROM CODE IS USED (FAN CONTRIBUTING FOR
EXTENDED PERIOD OF TIME IS USED. INDICATE AS SUCH, AND IT MUST BE A LISTED PRODUCT FOR SUCH USE FOR A RECOGNIZEDAPPROVAL LISTING AGENCY. PER 2019 ENERGY CODE SECTION 105 (K) (B). 4. ALL OUTLETS IN GARAGE TO BE GFCI INCLUDING THE GARAGE OPENER AT CEILING.

14. OUTDOOR LIGHTING:
ALL LIGHTS TO BE PERMANENTLY MOUNTED TO THE RESIDENTIAL BUILDING OR TO OTHER BUILDINGS ON THE SAME LOT ARE HIGH EFFICIANCY LUMINAIRES OR COMPLY WITH THE EXCEPTIONS AS FOLLOWS: 1. LIGHTS TO BE CONTROLLED BY A MOTION SENSOR WITH INTEGRAL PHOTO CONTROL. 2. LIGHTING NOT ATTACHED TO THE BUILDING (IE. LANDSCAPE LIGHTING ARE NOT EXEMPT).

15. BEDROOMS, HALLWAYS, STAIRS, DINING ROOMS, ETC... LIGHTING :
ALL LIGHTS IN THESE ROOMS ARE HIGH EFFICANCY LUMINAIRES OR COMPLY WITH TEH EXCEPTION AS FOLLOWS:
1. PROVIDE DIMMER SWITCH
2. PROVIDE MANUAL ON OCCUPANCY SENSOR AND MOTION SENSOR THAT COMPLIES WITH CEC SECTION 119 (D) AND SHALL NOT AHVE A CONTROL THAT ALLOW THE LUMINAIRES TO BE TURNED ON AUTOMATICALLY OR THAT HAS AN OVERRIDE ALLOWING THE LUMINAIRES TO BE ALWAYS ON.
3. CLOSETS LESS THAN 70 SQ. FT. ARE EXEMPT FROM LIGHTING REQUIREMENT.
4. INDICATE THAT LUMINAIRES IN CLOSETS SHALL BE LISTED FOR SUCH USE, AND WILL FOLLOW ALL DIMENSIONS CLEARANCES. SURFACE MOUNTED INCANDESCENT REQUIRED 12" CLEARANCE FROM SHELVES AND STORAGE SPACE, SURFACE MOUNTED FLOURESCENT REQUIRE 6" FROM SHELEVES AND STORAGE SPACE.
5. ALL BRANCH CIRCUITS THAT SUPPLY 120- VOLT, SINGLE PHASE, 15- AND 20- AMPERE OUTLETS INSTALLED IN DWELLING UNIT BEDROOM, FAMILY ROOMS, DINING ROOMS, LIVING ROOMS, PARLORS, LIBRARIES, DENS, SUNROOMS, RECREATION ROOMS, CLOSET, HALLWAYS, OR SIMILAR ROOMS, OR AREAS SHALL BE ARC- FAULT CIRCUIT INTERRUPTER (AFCI) PROTECTED PER CEC 210.12 (B)

16. FIRE PROTECTION NOTE:
CARBON MONOXIDE AND SMOKE ALARMS ARE REQUIRED, ALARMS TO BE INTERCONNECTED, HAVE TO BE PLACED IN EACH BEDROOM AND JUST OUTSIDE THE IMMEDIATE VICINITY OF EACH SLEEPING AREA. AT EACH LEVEL, INCLUDING BASEMENTS PER 315 OF 2019 CRC OUTLETS.
1) INTERIOR AND EXTERIOR PROVIDE AMPLE RESISTANT OUTLETS IN ALL 125 VOLT, 15, AND 20 AMP RECEPTACLES FOR ALL AREAS OF SINGLE FAMILY HOME, SECTION 406.11 AND 2019 CEC.
2.) BATHROOM OUTLETS- PROVIDE DEDICATED CIRCUIT FOR BATHROOM OUTLETS SECTION 210. 11 OF 2019 CEC.

CAL GREEN MANDATORY CHECKLIST

4.303.1 Water conserving plumbing fixtures and fittings.
Plumbing fixtures (water closets and urinals) and fittings (faucets and showerheads) installed in residential buildings shall comply with the prescriptive requirements of Sections 4303.1.1 through 4303.1.4.4

4.303.2 Standards for plumbing fixtures and fittings.
Plumbing fixtures and fittings required in Section 4.303.1 shall be installed in accordance with the California PlumbingCode, and shall meet the applicable referenced standards

4.507.2 Heating and air-conditioning system design.
Duct systems are sized, designed, and equipment is selected using the following methods:
1. Establish heat loss and heat gain values according to ANSIIACCA 2 Manual J-2004 or equivalent.
2. Size duct systems according to ANSI! ACCA 1 Manu
al D-2009 or equivalent.
3. Select heating and cooling equipment according to ANSI ACCA 3 Manual S-2004 or equivalent.

702.1 Installer Training.
HVAC system installers are trained and certified in the proper installation of HVAC systems.

702.2 Special Inspection.
Special inspectors employed by the enforcing agency must be qualified and able to demonstrate competence in the discipline they are inspecting.

703.1 Documentation.
Verification of compliance with this code may include construction docu- ments, plans, specifications builder or installer certification, inspection reports, or other methods
acceptable to the enforcing agency which show substantial confomance.

4.506. Exhaust Fans
Exhaust fans terminate outside building are provided in every bathroom

4.507.1
Whole house exhaust fan

4.507.2
Duct system sized and designed per ACCA manual D, J , and S

REGISTERED PROFESSIONAL ENGINEER
JYH-RONG YANG
No. C 48655
Exp. 06/30/22
CIVIL
STATE OF CALIFORNIA

Jerry Yang, P.E.; G.E.

REVISION TABLE			
NUMBER	DATE	REVISED BY	DESCRIPTION
1	06.22.22	EDS	REVISION 1

ELITE DESIGN STUDIO

PHAM RESIDENCE
16190 WOOD ACRES RD
LOS GATOS CA 95030

FIRST FLOOR
ELECTRICAL PLAN

DATE:
7/11/22

SCALE:
1/4" = 1'0"

SHEET:
A 11.0

LAUNDRY ROOM NOTESL:

1.DRYER MUST BE EQUIPPED WITH A BACKDRAFT DAMPER WITH NO SCREEN. THE DUCT IS LIMITED TO 14 FEET IN LENGTH WITH TWO 90 DEGREE ELBOWS FROM THE CLOTHEWS DRYER TO THE POIN OF TERMINATION. REDUCE THIS LENGTH BY 2 FEET FOR EVERY ELBOW IN EXCESS EXCESS OF TWO .

2. TERMINATION OF ALL ENVIRONMENTAL AIR DUCTS SHALL BE A MINIMUM OF 3 FEET FROM ANY OPENINGSI INTO THE BUILDING I.E DRYERS, BATHS AND UTILITYFANS, ETC. MUST BE 3 FEET AWAY FROM DOORS, WINDOWS, OPENING SKYLIGHTS OR ATTIC VENTS) CMC502.2.1

3. 20 AMP BRANCH CIRCUIT SHALL BE PROVIDED TO SUPPLY THE LAUNDRY RECEPTACLE OUTLET. CEC ARTICLES 210.11C)(2)

4. ALL 15 AND 20 AMPERE RECEPTACLES SHALL BE LISTED TAMPER RESISTANT RECEPTACLES.CEC 406.12

5. MAKEUP AIR SHALL BE PROVIDED FOR TYPE 1 CLOTHES DRYERS IN ACCORDANCE WITH THE MANUFACTURERFS INSTRUCTIONS. (NFPA 54:10.4.3.1) WHERE A CLOSET IS DESIGNED FOR INSTALLATION OF A CLOTHES DRYER, AN OPENING OF NOT LESS THAN 100 SQUARE INCHES FOR MAKEUP AIR SHALL BE PROVIDED IN THE DOOR OR BY OTHER APPROVED MEANS.

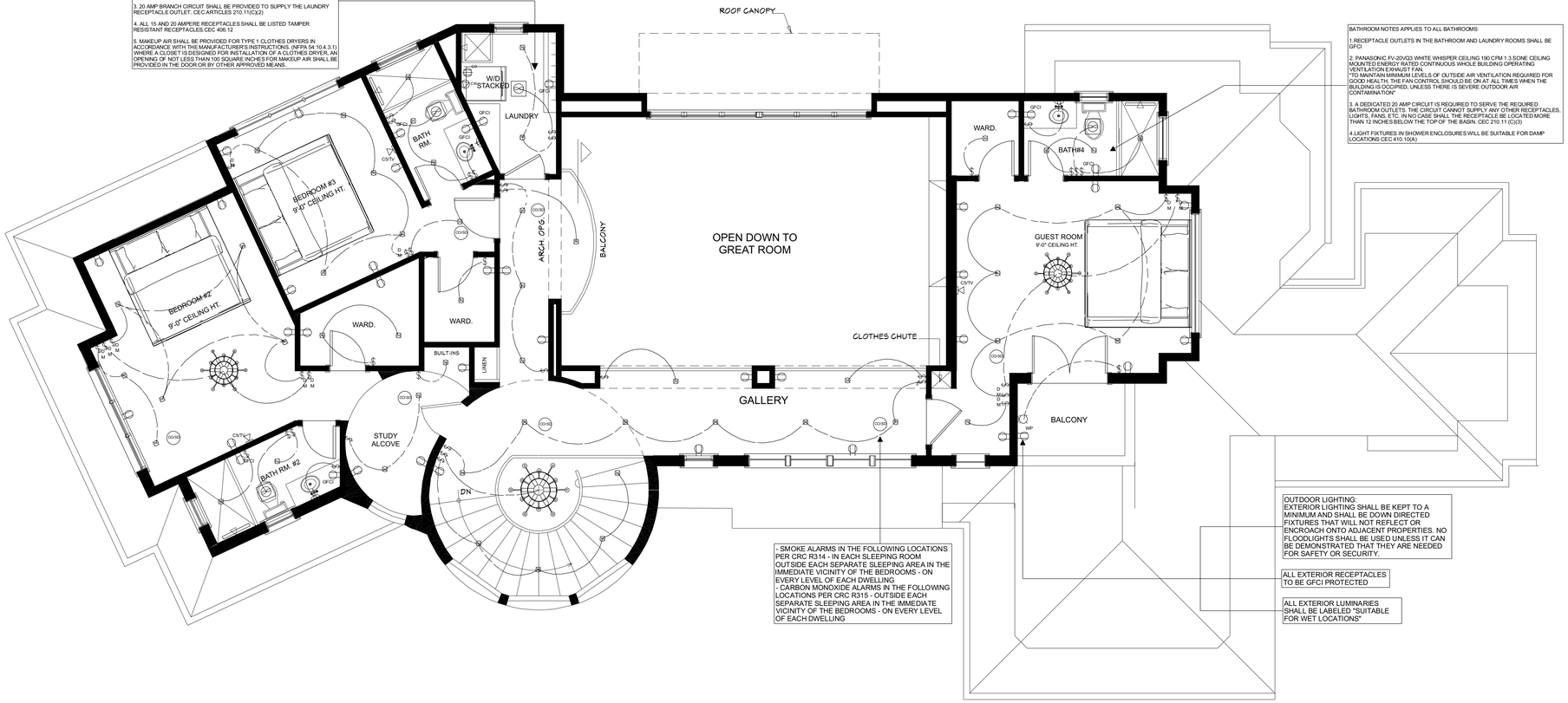

BATHROOM NOTES APPLIES TO ALL BATHROOMS:

1.RECEPTACLE OUTLETS IN THE BATHROOM AND LAUNDRY ROOMS SHALL BE GFCI

2. PANASONIC FV-20VQ3 WHITE WHISPER CEILING 190 CFM 1.3 SONE CEILING MOUNTED ENERGY RATED CONTINUOUS WHOLE BUILDING OPERATING VENTILATION EXHUST FAN.
"TO MAINTAIN MINIMUM LEVELS OF OUTSIDE AIR VENTILATION REQUIRED FOR GOOD HEALTH. THE FAN CONTROL SHOULD BE ON AT ALL TIMES WHEN THE BUILDING IS OCCUPIED, UNLESS THERE IS SEVERE OUTDOOR AIR CONTAMINATION"

3. A DEDICATED 20 AMP CIRCUIT IS REQUIRED TO SERVE THE REQUIRED BATHROOM OUTLETS. THE CIRCUIT CANNOT SUPPLY ANY OTHER RECEPTACLES, LIGHTS, FANS, ETC. IN NO CASE SHALL THE RECEPTACLE BE LOCATED MORE THAN 12 INCHES BELOW THE TOP OF THE BASIN. CEC 210.11 (C)(3)

4.LIGHT FIXTURES IN SHOWER ENCLOSURES WILL BE SUITABLE FOR DAMP LOCATIONS CEC 410.10(A)

- SMOKE ALARMS IN THE FOLLOWING LOCATIONS PER CRC R314 - IN EACH SLEEPING ROOM OUTSIDE EACH SEPARATE SLEEPING AREA IN THE IMMEDIATE VICINITY OF THE BEDROOMS - ON EVERY LEVEL OF EACH DWELLING
- CARBON MONOXIDE ALARMS IN THE FOLLOWING LOCATIONS PER CRC R315 - OUTSIDE EACH SEPARATE SLEEPING AREA IN THE IMMEDIATE VICINITY OF THE BEDROOMS - ON EVERY LEVEL OF EACH DWELLING

OUTDOOR LIGHTING:
EXTERIOR LIGHTING SHALL BE KEPT TO A MINIMUM AND SHALL BE DOWN DIRECTED FIXTURES THAT WILL NOT REFLECT OR ENCROACH ONTO ADJACENT PROPERTIES. NO FLOODLIGHTS SHALL BE USED UNLESS IT CAN BE DEMONSTRATED THAT THEY ARE NEEDED FOR SAFETY OR SECURITY.

ALL EXTERIOR RECEPTACLES TO BE GFCI PROTECTED

ALL EXTERIOR LUMINARIES SHALL BE LABELED "SUITABLE FOR WET LOCATIONS"

SECOND FLOOR ELECTRICAL PLANS 1/4" = 1'0"

ELECTRICAL - DATA - AUDIO LEGEND

SYMBOL	DESCRIPTION
	Ceiling Fan
	Ventilation Fans: Ceiling Mounted, Wall Mounted
	Ceiling Mounted Light Fixtures: Surface/Pendant, Recessed, Heat Lamp, Low Voltage
	Wall Mounted Light Fixtures: Flush Mounted, Wall Sconce
	Chandelier Light Fixture
	Fluorescent Light Fixture
	240V Receptacle
WP GFCI	110V Receptacles: Duplex, Weather Proof, GFCI
WP	Switches: Single Pole, Weather Proof, 3-Way, 4-Way
DM	Switches: Dimmer, Timer
AV Control	Audio Video: Control Panel, Switch
SP	Speakers: Ceiling Mounted, Wall Mounted
CAT5 CAT5/TV TV	Wall Jacks: CAT5, CAT5 + TV, TV/Cable
	Telephone Jack
	Intercom
	Thermostat
	Door Chime, Door Bell Button
CO SM	Carbon Monoxide and Smoke Detectors
EP	Electrical Breaker Panel

ELECTRICAL GENERAL NOTES

1. LOCATION OF POWER UNIT AND OUTLETS TO BE FIELD LOCATED BY OWNER. PROVIDE ALLOWANCE FOR ONE OUTLET PER 450 SQ. FT.

2. VERIFY ELECTRICAL REQUIREMENTS FOR WATER HEATERS AND MECHANICAL EQUIPMENT.

3. PROVIDE GASKETS ON ELECTRICAL OUTLETS AND SWITCH BOXES AT ALL EXTERIOR AND SOUND INSULATED WALLS.

4. PROVIDE FOUNDATION GROUND ELECTRODE AND ELECTRICAL SERVICE LOCATION

5. INSTALL GROUND FAULT INTERRUPTOR OUTLETS AT EXTERIOR, GARAGE, BATHS, KITCHEN AND LAUNDRY.

6. GENERAL LIGHTING AT BATHS AND KITCHEN TO HAVE FLORESCENT LAMPS, COLOR TEMP. PER OWNER SPECS.

7. RECESSED CEILING LIGHTS ARE (IC) RATED.

8. PROVIDE DUAL SWITCHING THROUGHOUT THE ROOMS IN COMPLIANCE TO ENERGY CODE PER SECTION 131- B.

9. PROVIDE TAMPER RESISTANT OUTLETS IN ALL 125-VOLT, 15, AND 20 AMP RECEPTACLES FOR ALL AREAS OF SINGLE FAMILY HOME (EXTERIOR TOO) SECTION 406.11 AND 210 CEC.

10. PROVIDE A LISTED WEATHER RESISTANT OUTLETS FOR ALL OUTLETS IN WET LOCATIONS. TH IS IN ADDITION TO WEATHER PROOF CAP. SECTION 406.6 OF 2019 CEC

11. CEC ARTICLES 210.11 C (1) AND 210.52 B PROVIDE TWO SMALL APPLIANCES BRANCH CIRCUITS ARE REQUIRED FOR THE KITCHEN AND ARE LIMITED TO SUPPLYING WALL AND COUNTER SPACE OUTLETS FOR THE KITCHEN, PANTRY, BREAKFAST ROOM, DINING ROOM, AND SIMILAR AREAS. NOTE: THE CIRCUITS CANNOT SERVE OUTSIDE PLUGS, RANGE HOOD, DISPOSALS, DISHWASHERS, OR MICROWAVES- ONLY THE REQUIRED COUNTERTOP WALL OUTLETS INCLUDING THE REFRIDGERATOR.

12. KITCHEN LIGHTING- ALL LIGHTS SHALL BE HIGH EFFIANCY LUMINAIRES OR COMPLY WITH THE EXCEPTION AS FOLLOWS:
1. AT LEAST 50% OF THE INSTALLED WATTAGE MUST BE HIGH EFFICIANCY.
2. HIGH EFFICIANCY LIGHTING MUST BE SWITCHED SEPARATELY FROM LOW EFFICIANCY LIGHTING, CLEARLY SHOW AND IDENTIFY SWITCH TYPES AND LOCATIONS ON THE PLANS.
NOTE: LIGHTING IN AREAS ADJACENT TO THE KITCHEN, INCLUDING BUT NOT LIMITED TO DINING AND NOOK AREAS ARE CONSIDERED KITCHEN LIGHTING. IF THEY ARE NOT SEPARTELY SWITCHED FROM KITCHEN LIGHTING.

13. BATHROOM, GARAGE, LAUNDRY ROOM, AND UTILITY ROOM LIGHTING:
ALL LIGHTS SHALL BE HIGH EFFICIANCY LUMINAIRES OR COMPLY WITH THE EXCEPTIONS AS FOLLOWS:
1. PROVIDE A MANUAL- ON-OCCUPANCY SENSOR AND MOTION THAT COMPLIES WITH CEC SECTION 119 (D) AND SHALL NO THAVE A CONTROL THAT ALLOWS THE
LUMINAIRES TO BE TURNED OUT ON AUTOMATICALLY OR THAT HAS AN OVERRIDE ALLOWING THE LUMINAIRES TO BE ALWAYS ON.
2.PROVIDE DEDICATED CURCUIT FOR THE BATHROOM OUTLETS OER SECTION B.210. 11C OF THE 2019 CEC.3. FAN LIGHTS MUST HAVE SEPARATE SWITCHES. THIS INCLUDES FAN/ LIGHTS COMBO, UNLESS EXCEPTION FROM CODE IS USED (FAN CONTRIBUTING FOR
EXTENDED PERIOD OF TIME IS USED. INDICATE AS SUCH, AND IT MUST BE A LISTED PRODUCT FOR SUCH USE FOR A RECOGNIZEDAPPROVAL LISTING AGENCY. PER 2019 ENERGY CODE SECTION 105 (K) (B). 4. ALL OUTLETS IN GARAGE TO BE GFCI INCLUDING THE GARAGE OPENER AT CEILING.

14. OUTDOOR LIGHTING:
ALL LIGHTS TO BE PERMANENTLY MOUNTED TO THE RESIDENTIAL BUILDING OR TO OTHER BUILDINGS ON THE SAME LOT ARE HIGH EFFICIANCY LUMINAIRES OR COMPLY WITH THE EXCEPTIONS AS FOLLOWS: 1. LIGHTS TO BE CONTROLLED BY A MOTION SENSOR WITH INTEGRAL PHOTO CONTROL. 2. LIGHTING NOT ATTACHED TO THE BUILDING (IE. LANDSCAPE LIGHTING ARE NOT EXEMPT).

15. BEDROOMS, HALLWAYS, STAIRS, DINING ROOMS, ETC... LIGHTING :
ALL LIGHTS IN THESE ROOMS ARE HIGH EFFICANCY LUMINAIRES OR COMPLY WITH TEH EXCEPTION AS FOLLOWS:
1. PROVIDE DIMMER SWITCH
2. PROVIDE MANUAL ON OCCUPANCY SENSOR AND MOTION SENSOR THAT COMPLIES WITH CEC SECTION 119 (D) AND SHALL NOT AHVE A CONTROL THAT ALLOW THE LUMINAIRES TO BE TURNED ON AUTOMATICALLY OR THAT HAS AN OVERRIDE ALLOWING THE LUMINAIRES TO BE ALWAYS ON.
3. CLOSETS LESS THAN 70 SQ. FT. ARE EXEMPT FROM LIGHTING REQUIREMENT.
4. INDICATE THAT LUMINAIRES IN CLOSETS SHALL BE LISTED FOR SUCH USE, AND WILL FOLLOW ALL DIMENSIONS CLEARANCES. SURFACE MOUNTED INCANDESCENT REQUIRED 12" CLEARANCE FROM SHELVES AND STORAGE SPACE, SURFACE MOUNTED FLOURESCENT REQUIRE 6" FROM SHELEVES AND STORAGE SPACE.
5. ALL BRANCH CIRCUITS THAT SUPPLY 120- VOLT, SINGLE PHASE, 15- AND 20- AMPERE OUTLETS INSTALLED IN DWELLING UNIT BEDROOM, FAMILY ROOMS, DINING ROOMS, LIVING ROOMS, PARLORS, LIBRARIES, DENS, SUNROOMS, RECREATION ROOMS, CLOSET, HALLWAYS, OR SIMILAR ROOMS, OR AREAS SHALL BE ARC- FAULT CIRCUIT INTERRUPTER (AFCI) PROTECTED PER CEC 210.12 (B)

16. FIRE PROTECTION NOTE:
CARBON MONOXIDE AND SMOKE ALARMS ARE REQUIRED, ALARMS TO BE INTERCONNECTED, HAVE TO BE PLACED IN EACH BEDROOM AND JUST OUTSIDE THE IMMEDIATE VICINITY OF EACH SLEEPING AREA. AT EACH LEVEL, INCLUDING BASEMENTS PER 315 OF 2019 CRC OUTLETS.
1) INTERIOR AND EXTERIOR PROVIDE AMPLE RESISTANT OUTLETS IN ALL 125 VOLT, 15, AND 20 AMP RECEPTACLES FOR ALL AREAS OF SINGLE FAMILY HOME, SECTION 406.11 AND 2019 CEC.
2.) BATHROOM OUTLETS- PROVIDE DEDICATED CIRCUIT FOR BATHROOM OUTLETS SECTION 210. 11 OF 2019 CEC.

CAL GREEN MANDATORY CHECKLIST

4.303.1 Water conserving plumbing fixtures and fittings.
Plumbing fixtures (water closets and urinals) and fittings (faucets and showerheads) installed in residential buildings shall comply with the prescriptive requirements of Sections 4303.1.1 through 4303.1.4.4

4.303.2 Standards for plumbing fixtures and fittings.
Plumbing fixtures and fittings required in Section 4.303.1 shall be installed in accordance with the California PlumbingCode, and shall meet the applicable referenced standards

4.507.2 Heating and air-conditioning system design.
Duct systems are sized, designed, and equipment is selected using the following methods:
1. Establish heat loss and heat gain values according to ANSIIACCA 2 Manual J-2004 or equivalent.
2. Size duct systems according to ANSII ACCA 1 Manu
al D-2009 or equivalent.
3. Select heating and cooling equipment according to ANSI ACCA 3 Manual S-2004 or equivalent.

702.1 Installer Training.
HVAC system installers are trained and certified in the proper installation of HVAC systems.

702.2 Special Inspection.
Special inspectors employed by the enforcing agency must be qualified and able to demonstrate competence in the discipline they are inspecting.

703.1 Documentation.
Verification of compliance with this code may include construction docu- ments, plans, specifications builder or installer certification, inspection reports, or other methods
acceptable to the enforcing agency which show substantial confomance.

4.506. Exhaust Fans
Exhaust fans terminate outside building are provided in every bathroom

4.507.1
Whole house exhaust fan

4.507.2
Duct system sized and designed per ACCA manual D, J , and S

REGISTERED PROFESSIONAL ENGINEER
JYH-RONG YANG
No. C 48655
Exp. 06/30/22
CIVIL
STATE OF CALIFORNIA

Jerry Yang, P.E.; G.E.

REVISION TABLE			
NUMBER	DATE	REVISED BY	DESCRIPTION
1	06.22.22	EDS	REVISION 1

ELITE DESIGN STUDIO

PHAM RESIDENCE
16190 WOOD ACRES RD
LOS GATOS CA 95030

SECOND FLOOR
ELECTRICAL PLAN

DATE:
7/11/22

SCALE:
1/4" = 1'0"

SHEET:
A 12.0

CERTIFICATE OF COMPLIANCE — CF1R-PRF-01E (Page 1 of 13)

Project Name: Wood Acres Road Residence — **Calculation Date/Time:** 2021-10-27T10:57:33-07:00
Calculation Description: Title 24 Analysis — **Input File Name:** Wood Acres Road Residence (16190).ribd19x

GENERAL INFORMATION					
01	Project Name	Wood Acres Road Residence			
02	Run Title	Title 24 Analysis			
03	Project Location	16190 Wood Acres Rd			
04	City	Los Gatos	05	Standards Version	2013
06	Zip code	95030	07	Software Version	EnergyPro 8.2
08	Climate Zone	4	09	Front Orientation (deg/ Cardinal)	0
10	Building Type	Single-family	11	Number of Dwelling Units	1
12	Project Scope	New Construction	13	Number of Bedrooms	4
14	Addition Cond. Floor Area (ft²)	0	15	Number of Stories	1
16	Existing Cond. Floor Area (ft²)	0	17	Fenestration Average U-factor	0.3
18	Total Cond. Floor Area (ft²)	5099	19	Glazing Percentage (%)	23.14%
20	Addition Conditioned Floor Area	0	21	Altid Conditioned Floor Area	n/a
22	Is Natural Gas Available?	Yes			

COMPLIANCE RESULTS	
01	**Building Complies with Computer Performance**
02	This building incorporates features that require field testing and/or verification by a certified HERS rater under the supervision of a CEC-approved HERS provider.
03	This building incorporates one or more Special Features shown below

Registration Number: 221-P010088840-000-000-0000000-0000 — Registration Date/Time: 2020-05-04 11:14:30 — HERS Provider: CalCERTS Inc.
CA Building Energy Efficiency Standards - 2013 Residential Compliance — Report Version: 2019.3.300 — Schema Version: rev 20190901 — Report Generated: 2021-10-27 11:00:24

CERTIFICATE OF COMPLIANCE — CF1R-PRF-01E (Page 2 of 13)

Project Name: Wood Acres Road Residence — **Calculation Date/Time:** 2021-10-27T10:57:33-07:00
Calculation Description: Title 24 Analysis — **Input File Name:** Wood Acres Road Residence (16190).ribd19x

ENERGY DESIGN RATING				
	Energy Design Ratings		Compliance Margins	
	Efficiency[1] (EDR)	Total[2] (EDR)	Efficiency[1] (EDR)	Total[2] (EDR)
Standard Design	19.2	25.8		
Proposed Design	19.7	25.3	2.5	2.5

RESULT: [3] COMPLIES

1. Efficiency EDR includes improvements to the building envelope and more efficient equipment.
2. Total EDR includes efficiency and demand response measures such as photovoltaic (PV) systems and batteries
3. Building complies when efficiency and total compliance margins are greater than or equal to zero

- Standard Design PV Capacity: 2.85 kWdc
- PV System resized to 2.85 kWdc (a factor of 2.599) to achieve 'Standard Design PV PV' scaling

ENERGY USE SUMMARY				
Energy Use (kTDV/ft² yr)	Standard Design	Proposed Design	Compliance Margin	Percent Improvement
Space Heating	37.58	15.31	4.77	15.5
Space Cooling	4.53	4.04	0.49	10.8
IAQ Ventilation	1.21	1.21	0	0
Water Heating	5.23	5.93	-0.71	-13.6
Self Utilization/Flexibility Credit	n/a	0	0	n/a
Compliance Energy Total	48.54	26.49	4.05	10.5

REQUIRED PV SYSTEMS - SUMMARY												
01	02	03	04	05	06	07	08	09	10	11	12	
DC System Size (kWdc)	Exception	Module Type	Array Type	Power Electronics	CFI	Azimuth (deg)	Tilt: Input	Array Angle (deg)	Tilt: Ix in 12	Inverter Eff. (%)	Annual Solar Access (%)	
2.91	N/A	Standard	Fixed	none	none	150-ENV	n/a	n/a	<=3:12	96	100	

Registration Number: 221-P010088840-000-000-0000000-0000 — Registration Date/Time: 2020-05-04 11:14:30 — HERS Provider: CalCERTS Inc.
CA Building Energy Efficiency Standards - 2013 Residential Compliance — Report Version: 2019.3.300 — Schema Version: rev 20190901 — Report Generated: 2021-10-27 11:00:24

CERTIFICATE OF COMPLIANCE — CF1R-PRF-01E (Page 3 of 13)

Project Name: Wood Acres Road Residence — **Calculation Date/Time:** 2021-10-27T10:57:33-07:00
Calculation Description: Title 24 Analysis — **Input File Name:** Wood Acres Road Residence (16190).ribd19x

REQUIRED SPECIAL FEATURES
The following are features that must be installed as condition for meeting the modeled energy performance for this compliance analysis.
• Indoor air quality: balanced fan • Non-standard duct location (any location other than attic)

HERS FEATURE SUMMARY
The following is a summary of the features that must be field verified by a certified HERS Rater as a condition for meeting the modeled energy performance for this compliance analysis. Additional detail is provided in the building tables below. Registered CF2Rs and CF3Rs are required to be completed in the HERS Registry
Building-level Verifications: • Quality insulation installation (QII) • Indoor air quality ventilation • Kitchen range hood Cooling System Verifications: • Minimum Airflow • Fan Efficacy (W/cfm) Heating System Verifications: • Verified heat pump rated heating capacity HVAC Distribution System Verifications: • Duct leakage testing • Ducts located entirely in conditioned space confirmed by duct leakage testing Domestic Hot Water System Verifications: • None

BUILDING - FEATURES INFORMATION						
01	02	03	04	05	06	07
Project Name	Conditioned Floor Area (ft²)	Number of Dwelling Units	Number of Bedrooms	Number of Zones	Number of Ventilation Cooling Systems	Number of Water Heating Systems
Wood Acres Road Residence	5099	1	3	1	0	1

ZONE INFORMATION						
01	02	03	04	05	06	07
Zone Name	Zone Type	HVAC System Name	Zone Floor Area (ft²)	Avg. Ceiling Height	Water Heating System 1	Water Heating System 2
Living Area	Conditioned	HVAC System1	5099	9	Bldg Sys 1	N/A

Registration Number: 221-P010088840-000-000-0000000-0000 — Registration Date/Time: 2020-05-04 11:14:30 — HERS Provider: CalCERTS Inc.
CA Building Energy Efficiency Standards - 2013 Residential Compliance — Report Version: 2019.3.300 — Schema Version: rev 20190901 — Report Generated: 2021-10-27 11:00:24

CERTIFICATE OF COMPLIANCE — CF1R-PRF-01E (Page 4 of 13)

Project Name: Wood Acres Road Residence — **Calculation Date/Time:** 2021-10-27T10:57:33-07:00
Calculation Description: Title 24 Analysis — **Input File Name:** Wood Acres Road Residence (16190).ribd19x

OPAQUE SURFACES							
01	02	03	04	05	06	07	08
Name	Zone	Construction	Azimuth	Orientation	Gross Area (ft²)	Window and Door Area (ft2)	Tilt (deg)
Front Wall	Living Area	R-21 Wall	0	Front	990	93	90
Left Wall	Living Area	R-21 Wall	90	Left	72	0	90
Rear Wall	Living Area	R-21 Wall	180	Back	936	0	90
Right Wall	Living Area	R-21 Wall	270	Right	343	60	90
NC Wall	Living Area	R-21 Wall	45	n/a	117	0	90
NW Wall	Living Area	R-21 Wall	315	n/a	45	0	90
Front Wall 2	Living Area	R-21 Wall	0	Front	630	126	90
Left Wall 2	Living Area	R-21 Wall	90	Left	390	36.8	90
Rear Wall 2	Living Area	R-21 Wall	180	Back	720	170	90
Right Wall 2	Living Area	R-21 Wall	270	Right	450	101.4	90
NW Wall 2	Living Area	R-21 Wall	315	n/a	855	43.7	90
NC Wall 2	Living Area	R-21 Wall	45	n/a	270	140	90
SC Wall	Living Area	R-21 Wall	135	n/a	990	56	90
SW Wall	Living Area	R-21 Wall	225	n/a	49	6.7	90
Front Wall 3	Living Area	R-21 Wall	0	Front	378	99.2	90
Rear Wall 3	Living Area	R-21 Wall	180	Back	450	78	90
Right Wall 3	Living Area	R-21 Wall	270	Right	915	26	90
NW Wall 3	Living Area	R-21 Wall	315	n/a	162	24	90
NC Wall 3	Living Area	R-21 Wall	45	n/a	342	71.5	90
SE Wall 2	Living Area	R-21 Wall	135	n/a	288	36	90
Interior Surface	Living Area+__Garage__	R-21 Wall3	n/a	n/a	152	21.3	n/a
Roof	Living Area	R-38 Roof Attic	n/a	n/a	185	n/a	n/a
Roof 2	Living Area	R-38 Roof Attic	n/a	n/a	3012	n/a	n/a
Roof 3	Living Area	R-38 Roof Attic	n/a	n/a	1766	n/a	n/a

Registration Number: 221-P010088840-000-000-0000000-0000 — Registration Date/Time: 2020-05-04 11:14:30 — HERS Provider: CalCERTS Inc.
CA Building Energy Efficiency Standards - 2013 Residential Compliance — Report Version: 2019.3.300 — Schema Version: rev 20190901 — Report Generated: 2021-10-27 11:00:24

CERTIFICATE OF COMPLIANCE — CF1R-PRF-01E (Page 5 of 13)

Project Name: Wood Acres Road Residence — **Calculation Date/Time:** 2021-10-27T10:57:33-07:00
Calculation Description: Title 24 Analysis — **Input File Name:** Wood Acres Road Residence (16190).ribd19x

OPAQUE SURFACES							
01	02	03	04	05	06	07	08
Name	Zone	Construction	Azimuth	Orientation	Gross Area (ft²)	Window and Door Area (ft2)	Tilt (deg)
Raised Floor	Living Area	R-19 Floor Crawlspace	n/a	n/a	1255	n/a	n/a
Interior Surface 2	Living Area	R-13 Floor No Crawlspace	n/a	n/a	560	n/a	n/a
Front Wall 4	__Garage__	R-0 Wall	0	Front	315	0	90
Left Wall 3	__Garage__	R-0 Wall	90	Left	198	0	90
Rear Wall 4	__Garage__	R-0 Wall	180	Back	315	0	90
Right Wall 4	__Garage__	R-0 Wall	270	Right	198	0	90

ATTIC							
01	02	03	04	05	06	07	08
Name	Construction	Type	Roof Rise (x in 12)	Roof Reflectance	Roof Emittance	Radiant Barrier	Cool Roof
Attic Gable Area	Attic Roof/Living Attic	Vented	7.0704	0.1	0.85	Yes	No

FENESTRATION / GLAZING													
01	02	03	04	05	06	07	08	09	10	11	12	13	14
Name	Type	Surface	Orientation	Azimuth	Width (ft)	Height (ft)	Mult.	Area (ft²)	U-factor	U-factor Source	SHGC	SHGC Source	Exterior Shading
WO3	Window	Front Wall	Front	0			1	18	0.3	NFRC	0.23	NFRC	Bug Screen
WO3 2	Window	Front Wall	Front	0			1	18	0.3	NFRC	0.23	NFRC	Bug Screen
WO3 3	Window	Front Wall	Front	0			1	18	0.3	NFRC	0.23	NFRC	Bug Screen
Door D39	Window	Front Wall	Front	0			1	24	0.3	NFRC	0.23	NFRC	Bug Screen
WO2	Window	Front Wall	Front	0			1	11	0.3	NFRC	0.23	NFRC	Bug Screen
WO4	Window	Right Wall	Right	270			1	50	0.3	NFRC	0.23	NFRC	Bug Screen
WO4 2	Window	Right Wall	Right	270			1	30	0.3	NFRC	0.23	NFRC	Bug Screen
WO7	Window	Front Wall 2	Front	0			1	8	0.3	NFRC	0.23	NFRC	Bug Screen
WO6	Window	Front Wall 2	Front	0			1	8	0.3	NFRC	0.23	NFRC	Bug Screen
WO4 3	Window	Front Wall 2	Front	0			1	28	0.3	NFRC	0.23	NFRC	Bug Screen

Registration Number: 221-P010088840-000-000-0000000-0000 — Registration Date/Time: 2020-05-04 11:14:30 — HERS Provider: CalCERTS Inc.
CA Building Energy Efficiency Standards - 2013 Residential Compliance — Report Version: 2019.3.300 — Schema Version: rev 20190901 — Report Generated: 2021-10-27 11:00:24

CERTIFICATE OF COMPLIANCE — CF1R-PRF-01E (Page 6 of 13)

Project Name: Wood Acres Road Residence — **Calculation Date/Time:** 2021-10-27T10:57:33-07:00
Calculation Description: Title 24 Analysis — **Input File Name:** Wood Acres Road Residence (16190).ribd19x

FENESTRATION / GLAZING													
01	02	03	04	05	06	07	08	09	10	11	12	13	14
Name	Type	Surface	Orientation	Azimuth	Width (ft)	Height (ft)	Mult.	Area (ft²)	U-factor	U-factor Source	SHGC	SHGC Source	Exterior Shading
WO3 4	Window	Front Wall 2	Front	0			1	4	0.3	NFRC	0.23	NFRC	Bug Screen
Door D30	Window	Front Wall 2	Front	0			1	40	0.3	NFRC	0.23	NFRC	Bug Screen
WO3 7	Window	Front Wall 2	Front	0			1	4	0.3	NFRC	0.23	NFRC	Bug Screen
WO1	Window	Front Wall 2	Front	0			1	20	0.3	NFRC	0.23	NFRC	Bug Screen
Door D38	Window	Left Wall 2	Left	90			1	21.3	0.3	NFRC	0.23	NFRC	Bug Screen
Door D35	Window	Left Wall 2	Left	90			1	13.5	0.3	NFRC	0.23	NFRC	Bug Screen
Door D37	Window	Rear Wall 2	Back	180			1	20	0.3	NFRC	0.23	NFRC	Bug Screen
Door D33 2	Window	Rear Wall 2	Back	180			1	120	0.3	NFRC	0.23	NFRC	Bug Screen
Door D36	Window	Rear Wall 2	Back	180			1	24	0.3	NFRC	0.23	NFRC	Bug Screen
WO9	Window	Rear Wall 2	Back	180			1	6	0.3	NFRC	0.23	NFRC	Bug Screen
WO7 2	Window	Rear Wall 2	Back	180			1	4	0.3	NFRC	0.23	NFRC	Bug Screen
WO11	Window	Right Wall 2	Right	270			1	18	0.3	NFRC	0.23	NFRC	Bug Screen
WO8	Window	Right Wall 2	Right	270			1	30	0.3	NFRC	0.23	NFRC	Bug Screen
WO5	Window	Right Wall 2	Right	270			1	18.7	0.3	NFRC	0.23	NFRC	Bug Screen
Door D31	Window	Right Wall 2	Right	270			1	30	0.3	NFRC	0.23	NFRC	Bug Screen
WO5 2	Window	Right Wall 2	Right	270			1	18.7	0.3	NFRC	0.23	NFRC	Bug Screen
WO3 2	Window	NE Wall 2	Right	315			1	20	0.3	NFRC	0.23	NFRC	Bug Screen
WO14	Window	NW Wall 2		315			1	16	0.3	NFRC	0.23	NFRC	Bug Screen
WO10	Window	NW Wall 2		315			1	6.7	0.3	NFRC	0.23	NFRC	Bug Screen
WO3 3	Window	NE Wall 2		45			1	20	0.3	NFRC	0.23	NFRC	Bug Screen
Door D34	Window	NE Wall 2		45			1	120	0.3	NFRC	0.23	NFRC	Bug Screen
WO12	Window	SE Wall		135			1	8	0.3	NFRC	0.22	NFRC	Bug Screen
WO13	Window	SE Wall		135			1	20	0.3	NFRC	0.23	NFRC	Bug Screen
WO12 2	Window	SE Wall		135			1	8	0.3	NFRC	0.23	NFRC	Bug Screen
WO9 2	Window	SW Wall		225			1	9.7	0.3	NFRC	0.23	NFRC	Bug Screen

Registration Number: 221-P010088840-000-000-0000000-0000 — Registration Date/Time: 2020-05-04 11:14:30 — HERS Provider: CalCERTS Inc.
CA Building Energy Efficiency Standards - 2013 Residential Compliance — Report Version: 2019.3.300 — Schema Version: rev 20190901 — Report Generated: 2021-10-27 11:00:24

CERTIFICATE OF COMPLIANCE — CF1R-PRF-01E (Page 7 of 13)

Project Name: Wood Acres Road Residence — **Calculation Date/Time:** 2021-10-27T10:57:33-07:00
Calculation Description: Title 24 Analysis — **Input File Name:** Wood Acres Road Residence (16190).ribd19x

FENESTRATION / GLAZING													
01	02	03	04	05	06	07	08	09	10	11	12	13	14
Name	Type	Surface	Orientation	Azimuth	Width (ft)	Height (ft)	Mult.	Area (ft²)	U-factor	U-factor Source	SHGC	SHGC Source	Exterior Shading
Door D01 2	Window	Front Wall 3	Front	0			1	49	0.3	NFRC	0.23	NFRC	Bug Screen
WO4 4	Window	Front Wall 3	Front	0			1	7	0.3	NFRC	0.23	NFRC	Bug Screen
WO3 5	Window	Front Wall 3	Front	0			1	6.3	0.3	NFRC	0.23	NFRC	Bug Screen
WO3 6	Window	Front Wall 3	Front	0			1	6.3	0.3	NFRC	0.23	NFRC	Bug Screen
WO3 7	Window	Front Wall 3	Front	0			1	6.3	0.3	NFRC	0.23	NFRC	Bug Screen
WO3 8	Window	Front Wall 3	Front	0			1	6.3	0.3	NFRC	0.23	NFRC	Bug Screen
WO2 3	Window	Front Wall 3	Front	0			1	7	0.3	NFRC	0.23	NFRC	Bug Screen
WO1 4	Window	Front Wall 3	Front	0			1	28	0.3	NFRC	0.23	NFRC	Bug Screen
WO9 2	Window	Rear Wall 3	Back	180			1	7	0.3	NFRC	0.23	NFRC	Bug Screen
WO8 2	Window	Rear Wall 3	Back	180			1	42	0.3	NFRC	0.23	NFRC	Bug Screen
WO8 3	Window	Rear Wall 3	Back	180			1	32	0.3	NFRC	0.23	NFRC	Bug Screen
WO7 3	Window	Rear Wall 3	Back	180			1	7	0.3	NFRC	0.23	NFRC	Bug Screen
WO6 2	Window	Right Wall 3	Right	270			1	5	0.3	NFRC	0.23	NFRC	Bug Screen
WO5 3	Window	Right Wall 3	Right	270			1	29	0.3	NFRC	0.23	NFRC	Bug Screen
WO1 5	Window	RW Wall 3		315			1	29	0.3	NFRC	0.23	NFRC	Bug Screen
WO4 2	Window	RW Wall 3		315			1	6	0.3	NFRC	0.23	NFRC	Bug Screen
WO1 6	Window	NE Wall 3		45			1	28	0.3	NFRC	0.23	NFRC	Bug Screen
WO1	Window	NE Wall 3		45			1	18	0.3	NFRC	0.23	NFRC	Bug Screen
WO1 2	Window	NE Wall 3		45			1	4	0.3	NFRC	0.23	NFRC	Bug Screen
WO2 5	Window	NE Wall 3		45			1	37.5	0.3	NFRC	0.23	NFRC	Bug Screen
WO1 2	Window	SE Wall 2		135			1	28	0.3	NFRC	0.23	NFRC	Bug Screen
WO3 3	Window	SE Wall 2		135			1	6	0.3	NFRC	0.23	NFRC	Bug Screen

Registration Number: 221-P010088840-000-000-0000000-0000 — Registration Date/Time: 2020-05-04 11:14:30 — HERS Provider: CalCERTS Inc.
CA Building Energy Efficiency Standards - 2013 Residential Compliance — Report Version: 2019.3.300 — Schema Version: rev 20190901 — Report Generated: 2021-10-27 11:00:24

CERTIFICATE OF COMPLIANCE — CF1R-PRF-01E (Page 8 of 13)

Project Name: Wood Acres Road Residence — **Calculation Date/Time:** 2021-10-27T10:57:33-07:00
Calculation Description: Title 24 Analysis — **Input File Name:** Wood Acres Road Residence (16190).ribd19x

OPAQUE DOORS				
01	02	03	04	
Name	Side of Building	Area (ft²)	U-factor	
D04	Interior Surface	21.3	0.2	

SLAB FLOORS							
01	02	03	04	05	06	07	08
Name	Zone	Area (ft²)	Perimeter (ft)	Edge Insul. R-value and Depth	Edge Insul. R-value and Depth	Carpeted Fraction	Heated
Slab	Living Area	879	141	none	0	85%	No
Slab 2	__Garage__	718	114	none	0	0%	No

OPAQUE SURFACE CONSTRUCTIONS							
01	02	03	04	05	06	07	08
Construction Name	Surface Type	Construction Type	Framing	Total Cavity R-value	Interior / Exterior Continuous R-value	U-factor	Assembly Layers
R-0 Wall	Exterior Walls	Wood Framed Wall	2x4 @ 16 in. O. C.	R-0	None / None	0.263	Inside Finish: Gypsum Board Cavity / Frame: no insul. / 2x4 Exterior Finish: 7/8 Cool Stucco
R-21 Wall	Exterior Walls	Wood Framed Wall	2x6 @ 16 in. O. C.	R-21	None / None	0.069	Inside Finish: Gypsum Board Cavity / Frame: R-21 / 2x6 Exterior Finish: 7/8 Cool Stucco
R-21 Wall1	Interior Walls	Wood Framed Wall	2x6 @ 16 in. O.C.	R-21	None / None	0.064	Inside Finish: Gypsum Board Cavity / Frame: R-21 / 2x6 Other Side Finish: Gypsum Board
Attic Roof/Living Area	Attic Roofs	Wood Framed Ceiling	2x4 @ 24 in. O. C.	R-0	None / None	0.610	Roofing: Light Roof (Asphalt Shingle) Roof Deck: Wood Siding/Sheathing/Decking Cavity / Frame: no insul. / 2x4

Registration Number: 221-P010088840-000-000-0000000-0000 — Registration Date/Time: 2020-05-04 11:14:30 — HERS Provider: CalCERTS Inc.
CA Building Energy Efficiency Standards - 2013 Residential Compliance — Report Version: 2019.3.300 — Schema Version: rev 20190901 — Report Generated: 2021-10-27 11:00:24

CERTIFICATE OF COMPLIANCE — CF1R-PRF-01E (Page 9 of 13)

Project Name: Wood Acres Road Residence — **Calculation Date/Time:** 2021-10-27T10:57:33-07:00
Calculation Description: Title 24 Analysis — **Input File Name:** Wood Acres Road Residence (16190).ribd19x

OPAQUE SURFACE CONSTRUCTIONS							
01	02	03	04	05	06	07	08
Construction Name	Surface Type	Construction Type	Framing	Total Cavity R-value	Interior / Exterior Continuous R-value	U-factor	Assembly Layers
R-19 Floor Crawlspace	Floors Over Crawlspace	Wood Framed Floor	2x10 @ 16 in. O. C.	R-19	None / None	0.096	Floor Surface: Carpeted Floor Deck: Wood Siding/Sheathing/Decking Cavity / Frame: R-19 / 2x10
R-38 Roof Attic	Ceilings (below attic)	Wood Framed Ceiling	2x8 @ 24 in. O. C.	R-38	None / None	0.025	Over Ceiling Joists: R-38.5 Insul. Cavity / Frame: R-9.5 / 2x8 Inside Finish: Gypsum Board
R-13 Floor No Crawlspace	Interior Floors	Wood Framed Floor	2x10 @ 16 in. O. C.	R-19	None / None	0.045	Floor Surface: Carpeted Floor Deck: Wood Siding/sheathing/decking Cavity / Frame: R-19 / 2x10 Ceiling Below Finish: Gypsum Board

BUILDING ENVELOPE - HERS VERIFICATION			
01	02	03	04
Cavity Insulation Installation (QII)	High R-value Spray Foam Insulation	Building Envelope Air Leakage	CFMF50
Required	Not Required	Not Required	n/a

WATER HEATING SYSTEMS						
01	02	03	04	05	06	07
Name	Systems Type	Distribution Type	Water Heater Name (#)	Solar Heating System	Compact Distribution	HERS Verification
DHW Sys 1	Domestic Hot Water (DHW)	Standard Distribution System	DHW Heater 1 (1)	n/a	None	n/a

Registration Number: 221-P010088840-000-000-0000000-0000 — Registration Date/Time: 2020-05-04 11:14:30 — HERS Provider: CalCERTS Inc.
CA Building Energy Efficiency Standards - 2013 Residential Compliance — Report Version: 2019.3.300 — Schema Version: rev 20190901 — Report Generated: 2021-10-27 11:00:24

CERTIFICATE OF COMPLIANCE — CF1R-PRF-01E (Page 10 of 13)

Project Name: Wood Acres Road Residence — **Calculation Date/Time:** 2021-10-27T10:57:33-07:00
Calculation Description: Title 24 Analysis — **Input File Name:** Wood Acres Road Residence (16190).ribd19x

WATER HEATERS											
01	02	03	04	05	06	07	08	09	10	11	12
Name	Heating Element Type	Tank Type	# of Units	Tank Vol. (gal)	Energy Factor or Efficiency	Input Rating or Pilot	Tank Insulation: R-value (ver/hor)	Standby Loss or Recovery Eff	1st Hr Rating or Flow Rate	NREA Heat Pump Brand or Model	Tank Location or Ambient Condition
DHW Heater 1	Gas	Consumer Instantaneous	2	0	0.93 UEF	<= 200 kBtu/hr	0	n/a	n/a	n/a	n/a

WATER HEATING - HERS VERIFICATION								
01	02	03	04	05	06	07	08	
Name	Pipe Insulation	Parallel Piping	Compact Distribution	Compact Distribution Type	Recirculation Control	Central DHW Distribution	Shower Drain Water Heat Recovery	
DHW Sys 1 - 1/2	Not Required	Not Required	Not Required	None	Not Required	Not Required	Not Required	

SPACE CONDITIONING SYSTEMS											
01	02	03	04	05	06	07	08	09	10	11	
Name	System Type	Heating Unit Name	Cooling Unit Name	Fan Name	Distribution Name	Required Thermostat Type	Status	Verified Existing Condition	Heating Equipment Count	Cooling Equipment Count	
HVAC System1	Heat pump heating cooling	Heat Pump System 1	Heat Pump System 1	HVAC Fan 1	Air Distribution System 1	Setback	New	NA	1	1	

HVAC - HEAT PUMPS											
01	02	03	04	05	06	07	08	09	10	11	
Name	System Type	Number of Units	Heating		Cooling			Zonally Controlled	Compressor Type	HERS Verification	
			HSPF/COP	Cap 47	Cap 17	SEER	EER/CEER				
Heat Pump System 1	Central split HP	1	8.2	60000	58000	14	11.7	Not Zonal	Single Speed	Heat Pump System 1-hers-Hpump	

Registration Number: 221-P010088840-000-000-0000000-0000 — Registration Date/Time: 2020-05-04 11:14:30 — HERS Provider: CalCERTS Inc.
CA Building Energy Efficiency Standards - 2013 Residential Compliance — Report Version: 2019.3.300 — Schema Version: rev 20190901 — Report Generated: 2021-10-27 11:00:24

CERTIFICATE OF COMPLIANCE — CF1R-PRF-01E (Page 11 of 13)

Project Name: Wood Acres Road Residence — **Calculation Date/Time:** 2021-10-27T10:57:33-07:00
Calculation Description: Title 24 Analysis — **Input File Name:** Wood Acres Road Residence (16190).ribd19x

HVAC HEAT PUMPS - HERS VERIFICATION								
01	02	03	04	05	06	07	08	09
Name	Verified Airflow	Airflow Target	Verified EER	Verified SEER	Verified Refrigerant Charge	Verified HSPF	Verified Heating Cap 47	Verified Heating Cap 17
Heat Pump System 1-hers-Hpump	Required	350	Not Required	Not Required	No	No	Yes	Yes

HVAC - DISTRIBUTION SYSTEMS											
01	02	03	04	05	06	07	08	09	10	11	12
Name	Type	Design Type	Duct Ins. R-value		Duct Location		Surface Area		Bypass Duct	Duct Leakage	HERS Verification
			Supply	Return	Supply	Return	Supply	Return			
Air Distribution System 1	Conditioned space-entirely	Non-Verified	R-6	R-6	Conditio ned Zone	Conditio ned Zone	n/a	n/a	No Bypass Duct	Sealed and Tested	Air Distribution System 1-hers-dist

HVAC DISTRIBUTION - HERS VERIFICATION									
01	02	03	04	05	06	07	08	09	
Name	Duct Leakage Verification	Duct Leakage Target (%)	Verified Duct Location	Verified Duct Design	Buried Ducts	Deeply Buried Ducts	Low-leakage Air Handler	Low Leakage Ducts Entirely in Conditioned Space	
Air Distribution System 1-hers-dist	Yes	5.0	Required	Not Required	Not Required	Could not Leave	Not Required	No	

HVAC - FAN SYSTEMS			
01	02	03	04
Name	Type	Fan Power (Watts/CFM)	Name
HVAC Fan 1	HVAC Fan	0.45	HVAC Fan 1-hers-fan

Registration Number: 221-P010088840-000-000-0000000-0000 — Registration Date/Time: 2020-05-04 11:14:30 — HERS Provider: CalCERTS Inc.
CA Building Energy Efficiency Standards - 2013 Residential Compliance — Report Version: 2019.3.300 — Schema Version: rev 20190901 — Report Generated: 2021-10-27 11:00:24

CERTIFICATE OF COMPLIANCE — CF1R-PRF-01E (Page 12 of 13)

Project Name: Wood Acres Road Residence — **Calculation Date/Time:** 2021-10-27T10:57:33-07:00
Calculation Description: Title 24 Analysis — **Input File Name:** Wood Acres Road Residence (16190).ribd19x

HVAC FAN SYSTEMS - HERS VERIFICATION		
01	02	03
Name	Verified Fan Watt Draw	Required Fan Efficacy (Watts/CFM)
HVAC Fan 1-hers-fan	Required	0.45

IAQ (INDOOR AIR QUALITY) FAN					
01	02	03	04	05	06
Dwelling Unit	IAQ CFM	IAQ Watts/CFM	IAQ Fan Type	IAQ Recovery Effectiveness (%)	IAQ Recovery Effectiveness - SRE&L Recovery Effectiveness - MA
Shen IAQVentRat 1 1	225	0.3	Balanced HRV	80	n/a

Registration Number: 221-P010088840-000-000-0000000-0000 — Registration Date/Time: 2020-05-04 11:14:30 — HERS Provider: CalCERTS Inc.
CA Building Energy Efficiency Standards - 2013 Residential Compliance — Report Version: 2019.3.300 — Schema Version: rev 20190901 — Report Generated: 2021-10-27 11:00:24

CERTIFICATE OF COMPLIANCE — CF1R-PRF-01E (Page 13 of 13)

Project Name: Wood Acres Road Residence — **Calculation Date

COUNTY OF SANTA CLARA

2019 CALGREEN RESIDENTIAL CHECKLIST (MANDATORY+TIER 1)

County Amendments to CALGreen are in Italics.

- Designer to cross out items that are not applicable to the project.
- Installer or designer shall verify all applicable requirements have been satisfied and sign and date each row. County Inspectors will verify completion signatures and supporting documentation DURING CONSTRUCTION.

ITEM #	CALGreen CODE SECTION	REQUIREMENT	APPLICANT TO COMPLETE Plan Check Review Data: REFERENCE SHEET	Note or Detail No.	Installer or Designer Verification: Date	Installer or Designer Signature
PLANNING AND DESIGN: MANDATORY REQUIRMENTS						
1	4.106.2	A plan is developed and implemented to manage storm water drainage during construction.	CG-3	NOTE 1	6.09.22	
2	4.106.3	Construction plans indicates how site grading or a drainage system will manage all surface water flows to keep water from entering buildings.	CG-3	NOTE 2	6.09.22	
3	4.106.4.1	For new dwellings and the ***rebuild*** *of existing dwellings that include a panel upgrade or construction between panel and parking area,* a raceway to a dedicated 208/240-volt branch circuit meeting the requirements, is installed.	CG-3	NOTES 3 & 4	6.09.22	
PLANNING AND DESIGN: TIER 1 MANDATORY REQUIREMENTS						
4	A4.106.2.3	Displaced topsoil is stockpiled for reuse in a designated area and covered or protected from erosion.	CG-4	NOTE 7	6.09.22	
5	A4.106.4	Not less than 20 percent of the total parking, walking or patio surfaces are permeable.	CG-4	NOTE 9	6.09.22	
6	A4.106.8.1	For new dwellings with attached private garages, a dedicated 208/240-volt branch circuit including an overcurrent protective device is installed in the raceway, meeting the applicable requirements.	CG-4	NOTE 12	6.09.22	
PLANNING AND DESIGN: TIER 1 ELECTIVE REQUIREMENTS						
Comply with at least two Tier 1 elective measures - Cross out the rows not applicable	7	A4.103.1	An infill site, greyfield site or EPA-recognized and Brownfield site is applicable.	CG-4	NOTE 1		
	8	A4.103.2	Community connectivity is facilitated by one of the approved methods.	CG-4	NOTE 2		
	9	A4.104.1	An individual with oversight responsibility for the project has participated in an educational program promoting environmentally friendly design or development and has provided instruction to appropriate entities.	CG-4	NOTE 3		
	10	A4.106.2	Existing buildings are disassembled for reuse or recycling of building materials. The proposed structure utilizes at least one of the listed materials.	CG-4	NOTE 4		
	11	A4.106.2.1	Soil analysis is performed by a licensed design professional and the findings are utilized in the structural design of the building.	CG-4	NOTE 5	6.09.22	
	12	A4.106.2.2	Soil disturbance and erosion are minimized by using one or more of the methods listed	CG-4	NOTE 6	6.09.22	
	13	A4.106.3	Landscape areas disrupted during construction are restored to be consistent with native vegetation and/or at least 75% native California or drought tolerant plant and tree are utilized.	CG-4	NOTE 8	6.09.22	
	14	A4.106.6	A vegetated roof for at least 50% of the roof area is installed. Vegetated roof complies with CBC chapters 15 and 16.	CG-4	NOTE 10		
	15	A4.106.7	Nonroof heat islands are reduced for 50% of sidewalks, patios, driveways, or other paved areas by using one or more of the methods listed.	CG-4	NOTE 11	6.09.22	
	16	A4.106.10	Outdoor lighting systems are designed and installed to comply with one of the methods listed.	CG-4 CG-1	NOTE 13 TABLE A4.106.10	6.09.22	
ENERGY EFFICIENCY: MANDATORY REQUIRMENTS							
17	4.201.1	Building meets or exceeds the requirements of the California Building Energy Efficiency Standards.	T24 SHEETS		6.09.22	
WATER EFFICIENCY & CONSERVATION: MANDATORY REQUIREMENTS							
18	4.303.1	Plumbing fixtures (water closets and urinals) and fittings (faucets and showerheads) installed in residential buildings comply with CALGreen Sections 4.303.1.1 through 4.303.1.4.4.	CG-3	NOTE 5	6.09.22	
19	4.303.2	Plumbing fixtures and fittings required in CALGreen Section 4.303.1 are installed in accordance with the CPC and meet the applicable referenced standards.	CG-3	Note 6	6.09.22	
20	4.304.1	Outdoor potable water use in landscape areas comply with a local water efficient landscape or the current California DWR MWELO, whichever is more stringent	CG-3	Note 7	6.09.22	
21	4.305.1	For new dwellings where disinfected tertiary recycled water is available, installation of recycled water supply system is required per CPC chapter 15.	CG-3	Note 8	6.09.22	

ITEM #	CALGreen CODE SECTION	REQUIREMENT	APPLICANT TO COMPLETE Plan Check Review Data: REFERENCE SHEET	Note or Detail No.	Installer or Designer Verification: Date	Installer or Designer Signature
WATER EFFICIENCY & CONSERVATION : TIER 1 ELECTIVE REQUIREMENTS						
Comply with at least two Tier 1 elective measures - Cross out the rows not applicable	22	A4.303.1	Kitchen faucet maximum flow rate does not exceed 1.5 gpm at 60 psi. See exceptions.	CG-4	NOTE 14	6.09.22	
	23	A4.303.2	Alternate nonpotable water resources are used for indoor potable water reduction and are installed in accordance with CPC.	CG-4	NOTE 15		
	24	A4.303.3	At least one qualified ENERGY STAR dishwasher or clothes washer is installed.	CG-4	NOTE 16	6.09.22	
	25	A4.303.4	Nonwater urinals or composting toilets are installed.	CG-4	NOTE 17		
	26	A4.303.5	Dwelling is equipped with a demand hot water recirculation system. The system is installed per CPC, CEnC, and the manufacturer's installation instructions.	CG-4	NOTE 18		
	27	A4.304.1	An approved rainwater catchment system is designed and installed to use rainwater generated by at least 65% the available roof area. The system is installed per CPC	CG-4	NOTE 19		
	28	A4.304.2	A water efficient landscape irrigation design that eliminates the use of potable water, is provided. Method used to accomplish the requirements comply with California Building Standards Code and one or more of listed methods.	CG-4	NOTE 20		
	29	A4.304.3	Separate submeters or metering devices for outdoor potable water use is provided for landscape areas less than 5000 sq ft.	CG-4	NOTE 21	6.09.22	
	30	A4.305.1	Alternative plumbing piping is installed to permit the discharge from the clothes washer or other fixtures to be used for an irrigation system in compliance with CPC.	CG-4	NOTE 22		
	31	A4.305.2	Dual water piping is installed for future use of recycled water at listed locations.	CG-4	NOTE 23		
	32	A4.305.3	Recycled water is used for landscape irrigation.	CG-4	Note 24		
MATERIAL CONSERVATION & RESOURCE EFFICIENCY: MANDATORY REQUIREMENTS							
	33	4.406.1	Annular spaces around pipes, electric cables, conduits or other openings in plates at exterior walls are protected against the passage of rodents by closing such openings with cement mortar, concrete masonry or similar method acceptable to the County of Santa Clara.	CG-3	Note 9	6.09.22	
	34	4.408.1	Recycle and/or salvage for reuse a minimum of 65 percent of the nonhazardous construction and demolition waste. Submit either a Construction Waste management plan (CALGreen 4.408.2) or Utilize a waste management company (CALGreen 4.408.3).	CG-3	Note 10	6.09.22	
	35	4.408.5	Documentation is provided to County of Santa Clara which demonstrates compliance with CALGreen sections 4.408.2 or 4.408.3.	CG-2 CG-3	Construction Waste Management Forms Note 11	6.09.22	
	36	4.410.1	An operation and maintenance manual is placed in the building at the time of final inspection.	CG-3	Note 12	6.09.22	
MATERIAL CONSERVATION & RESOURCE EFFICIENCY: TIER 1 MANDATORY REQUIREMENTS							
	37	A4.403.2	Reduction in cement use in foundation mix design is not less than 20 percent.	CG-4	Note 26	6.09.22	
	38	A4.405.3.1	Use materials with a total RCV (recycled content value) not less than a 10-percent of the total material cost of the project except structural framing material.	CG-4	Note 33	6.09.22	
	39	A4.408.1	Reduce construction waste by at least 65%. Documentation is submitted to the County of Santa Clara demonstrating compliance.	CG-2 CG-34	Construction Waste Management Forms Note 41	6.09.22	
MATERIAL CONSERVATION & RESOURCE EFFICIENCY: TIER 1 ELECTIVE REQUIREMENTS							
Comply with at least two Tier 1 elective measures - Cross out the rows not applicable	40	A4.403.1	A Frost-Protected Shallow Foundation (FPSF) is utilized in compliance with CRC. The required manual includes instructions to the owner or occupant regarding the necessity for heating the structure per CRC R403.3.	CG-4	NOTE 25		
	41	A4.404.1	Beams, headers and trimmers are sized and installed as specified in Chapter 23 of CBC or Chapter 6 of CRC.	CG-4	NOTE 27		
	42	A4.404.2	Building dimensions and layouts are designed to minimize waste by one or more of the listed measures in at least 80% of the structure.	CG-4	NOTE 28		
	43	A4.404.3	Prefabricated building system, as listed, is used to eliminate solid sawn lumber	CG-4	NOTE 29		
	44	A4.404.4	Material lists are included in the plans which specify the material quantity and direction for on-site cuts, for the listed systems.	CG-4	NOTE 30		
	45	A4.405.1	Prefinished building materials are utilized which do not require additional painting or staining. Acceptable material list is per CALGreen A4.405.1.	CG-4	NOTE 31		
	46	A4.405.2	Concrete floors that do not require additional coverings are used.	CG-4	NOTE 32		
	47	A4.405.4	One or more of the listed materials from rapidly renewable sources or agricultural byproducts are used.	CG-4	NOTE 34		
	48	A4.407.1	Foundation and landscape drains with discharge to an approved on-site location is installed.	CG-4	NOTE 35	6.09.22	
	49	A4.407.2	Roof gutter and downspout system is installed to route water at least 5 feet away from the foundation or connect to landscape drains with approved on-site discharge.	CG-4	NOTE 36	6.09.22	
	50	A4.407.3	Flashing details complying with accepted industry standards or manufacturer's instructions are provided on the plans.	CG-4	NOTE 37	6.09.22	
	51	A4.407.4	Building materials delivered to the construction site are protected from rain and other sources of moisture.	CG-4	NOTE 38	6.09.22	
	52	A4.407.5	Exterior doors are covered to prevent water intrusion by one or more listed methods.	CG-4	NOTE 39	6.09.22	
	53	A4.407.7	A permanent overhang or awning at least two feet in depth is provided at all exterior walls.	CG-4	Note 40		

ITEM #	CALGreen CODE SECTION	REQUIREMENT	APPLICANT TO COMPLETE Plan Check Review Data: REFERENCE SHEET	Note or Detail No.	Installer or Designer Verification: Date	Installer or Designer Signature
ENVIRONMENTAL QUALITY: MANDATORY REQUIREMENTS						
54	4.503.1	Any installed gas fireplace is a direct-vent sealed-combustion type. Any installed woodstove or pellet stove comply with US EPA Phase II emission limits where applicable.	CG-3	Note 13	6.09.22	
55	4.504.1	Duct openings and other related air distribution component openings are covered during construction until final startup of the HVAC equipment.	CG-3	Note 14	6.09.22	
56	4.504.2.1	Adhesives, sealants and caulks are compliant with VOC and other toxic compound limits.	CG-2 CG-2	Table 4.504.1 Table 4.504.2 Note 15	6.09.22	
57	4.504.2.2	Architectural paints and coatings are compliant with VOC limits.	CG-2 CG-3	Table 4.504.3 Note 16	6.09.22	
58	4.504.2.3	Aerosol paints and coatings are compliant with product weighted MIR limits for ROC and other toxic compounds.	CG-3	Note 17	6.09.22	
59	4.504.2.4	Documentation are provided to the County of Santa Clara to verify that compliant VOC limit finish materials have been used.	CG-3	Note 18	6.09.22	
60	4.504.3	Carpet and carpet systems meet the applicable testing and product requirements.	CG-2 CG-3	Table 4.504.1 Note 19	6.09.22	
61	4.504.5	Hardwood plywood, particleboard and medium density fiberboard composite wood meet formaldehyde limits.	CG-1 CG-3	Table 4.504.5 Note 21	6.09.22	
62	4.504.5.1	Documentation is provided to the County of Santa Clara to verify composite wood meets applicable formaldehyde limits.	CG-3	Note 22	6.09.22	
63	4.505.2	Vapor retarder and capillary break is installed at slab-on-grade foundations.	CG-3	Note 23	6.09.22	
64	4.505.3	Moisture content of building materials used in wall and floor framing do not exceed 19% prior to enclosure and is checked before enclosure. Insulation products are dry prior to enclosure.	CG-3	Note 24	6.09.22	
65	4.506.1	Each bathroom is mechanically ventilated and comply with applicable requirements.	CG-3	Note 25	6.09.22	
66	4.507.2	Heating and air-conditioning systems are sized, designed, and equipment is selected by using one of the methods listed.	CG-3	Note 26	6.09.22	
ENVIROMENTAL QUALITY: TIER 1 MANDATORY REQUIREMENTS						
67	A4.504.2	At least 90% of resilient flooring complies with applicable VOC limits.	CG-4	Note 43	6.09.22	
68	A4.504.3	Thermal insulation in the building is installed in compliance with applicable standards.	CG-4	Note 44	6.09.22	
ENVIROMENTAL QUALITY: TIER 1 ELECTIVE REQUIREMENTS						
Comply with at least one Tier 1 elective measures - Cross out the rows not applicable	69	A4.504.1	Composite wood products made with NAF or ULEF resins are used.	CG-4	Note 42		
	70	A4.506.2	Filters at MERV 8 or higher are used on return air openings, during construction.	CG-4	Note 45		
	71	A4.506.3	Direct vent heating and cooling equipment are utilized where the equipment will be located in the conditioned space or the space heating and water heating equipment is installed in an isolated mechanical room.	CG-4	Note 46	6.09.22	
INSTALLER AND SPECIAL INSPECTOR QUALIFICATIONS: MANDATORY REQUIREMENTS							
72	702.1	HVAC system installers are trained and certified in the proper installation of HVAC systems.	CG-3	Note 27	6.09.22	
73	702.2	If required by County of Santa Clara, owner or owner's agent shall employ special inspector who are qualified and able to demonstrate competence in the discipline they are inspecting.	CG-3	Note 28	6.09.22	
74	703.1	Documentation used to show compliance with this code may include construction documents, plans, specifications, builder or installer certification, inspection reports, or other methods acceptable to County of Santa Clara which show substantial conformance.	CG-3	Note 29	6.09.22	

TABLE 4.504.5
FORMALDEHYDE LIMITS[1]
Maximum Formaldehyde Emissions in Parts per Million

PRODUCT	CURRENT LIMIT
Hardwood plywood veneer core	0.05
Hardwood plywood composite core	0.05
Particleboard	0.09
Medium density fiberboard	0.11
Thin medium density fiberboard[2]	0.13

1. Values in this table are derived from those specified by the California Air Resources Board, Air Toxics Control Measure for Composite Wood as tested in accordance with ASTM E1333. For additional information, see *California Code of Regulations*, Title 17, Sections 93120 through 93120.12.
2. Thin medium density fiberboard has a maximum thickness of $\frac{5}{16}$ inch (8 mm).

TABLE A4.106.10
MAXIMUM ALLOWABLE BACKLIGHT, UPLIGHT AND GLARE (BUG) RATINGS[1,2]

ALLOWABLE RATING	LIGHTING ZONE 1	LIGHTING ZONE 2	LIGHTING ZONE 3	LIGHTING ZONE 4
Maximum Allowable Backlight Rating[3]				
Luminaire greater than 2 mounting heights (MH) from property line	No Limit	No Limit	No Limit	No Limit
Luminaire back hemisphere is 1 – 2 MH from property line	B2	B3	B4	B4
Luminaire back hemisphere is 0.5 – 1 MH from property line	B1	B2	B3	B3
Luminaire back hemisphere is less than 0.5 MH from property line	B0	B0	B1	B2
Maximum Allowable Uplight Rating				
For area lighting[4]	U0	U0	U0	U0
For all other outdoor lighting, including decorative luminaires	U1	U2	U3	U4
Maximum Allowable Glare Rating[5]				
Luminaire greater than 2 MH from property line	G1	G2	G3	G4
Luminaire front hemisphere is 1 – 2 MH from property line	G0	G1	G1	G2
Luminaire front hemisphere is 0.5 – 1 MH from property line	G0	G0	G1	G1
Luminaire back hemisphere is less than 0.5 MH from property line	G0	G0	G0	G1

1. IESNA Lighting Zones 0 and 5 are not applicable; refer to Lighting Zones as defined in the *California Energy Code* and Chapter 10 of the *California Administrative Code*.
2. For property lines that abut public walkways, bikeways, plazas and parking lots, the property line may be considered to be 5 feet beyond the actual property line for purpose of determining compliance with this section. For property lines that abut public roadways and public transit corridors, the property line may be considered to be the centerline of the public roadway or public transit corridor for the purpose of determining compliance with this section.
3. If the nearest property line is less than or equal to two mounting heights from the back hemisphere of the luminaire distribution, the applicable reduced Backlight rating shall be met.
4. General lighting luminaires in areas such as outdoor parking, sales or storage lots shall meet these reduced ratings. Decorative luminaires located in these areas shall meet U-value limits for "all other outdoor lighting."
5. If the nearest property line is less than or equal to two mounting heights from the front hemisphere of the luminaire distribution, the applicable reduced Glare rating shall be met.

CALGreen One or Two Family Residential Project Mandatory and Tier1 Requirements
County of Santa Clara

CG-1
03/30/2020

REGISTERED PROFESSIONAL ENGINEER JYH-RONG YANG No. C 48655 Exp. 06/30/22 CIVIL STATE OF CALIFORNIA

Jerry Yang, P.E.; G.E.

REVISION TABLE			
NUMBER	DATE	REVISED BY	DESCRIPTION
1	06.22.22	EDS	REVISION 1

ELITE DESIGN STUDIO

Project Information

PHAM RESIDENCE
16190 WOOD ACRES RD
LOS GATOS CA 95030

DATE: 7/11/22

SCALE:

SHEET:

TABLE 4.504.1
ADHESIVE VOC LIMIT[1, 2]
Less Water and Less Exempt Compounds in Grams per Liter

ARCHITECTURAL APPLICATIONS	VOC LIMIT
Indoor carpet adhesives	50
Carpet pad adhesives	50
Outdoor carpet adhesives	150
Wood flooring adhesive	100
Rubber floor adhesives	60
Subfloor adhesives	50
Ceramic tile adhesives	65
VCT and asphalt tile adhesives	50
Drywall and panel adhesives	50
Cove base adhesives	50
Multipurpose construction adhesives	70
Structural glazing adhesives	100
Single-ply roof membrane adhesives	250
Other adhesives not specifically listed	50
SPECIALTY APPLICATIONS	
PVC welding	510
CPVC welding	490
ABS welding	325
Plastic cement welding	250
Adhesive primer for plastic	550
Contact adhesive	80
Special purpose contact adhesive	250
Structural wood member adhesive	140
Top and trim adhesive	250
SUBSTRATE SPECIFIC APPLICATIONS	
Metal to metal	30
Plastic foams	50
Porous material (except wood)	50
Wood	30
Fiberglass	80

1. If an adhesive is used to bond dissimilar substrates together, the adhesive with the highest VOC content shall be allowed.
2. For additional information regarding methods to measure the VOC content specified in this table, see South Coast Air Quality Management District Rule 1168.

TABLE 4.504.2
SEALANT VOC LIMIT
Less Water and Less Exempt Compounds in Grams per Liter

SEALANTS	VOC LIMIT
Architectural	250
Marine deck	760
Nonmembrane roof	300
Roadway	250
Single-ply roof membrane	450
Other	420
SEALANT PRIMERS	
Architectural Nonporous Porous	250 775
Modified bituminous	500
Marine deck	760
Other	750

TABLE 4.504.3
VOC CONTENT LIMITS FOR ARCHITECTURAL COATINGS[1, 2]
Grams of VOC per Liter of Coating, Less Water and Less Exempt Compounds

COATING CATEGORY	VOC LIMIT
Flat coatings	50
Nonflat coatings	100
Nonflat-high gloss coatings	150
SPECIALTY COATINGS	
Aluminum roof coatings	400
Basement specialty coatings	400
Bituminous roof coatings	50
Bituminous roof primers	350
Bond breakers	350
Concrete curing compounds	350
Concrete/masonry sealers	100
Driveway sealers	50
Dry fog coatings	150
Faux finishing coatings	350
Fire resistive coatings	350
Floor coatings	100
Form-release compounds	250
Graphic arts coatings (sign paints)	500
High temperature coatings	420
Industrial maintenance coatings	250
Low solids coatings[3]	120
Magnesite cement coatings	450
Mastic texture coatings	100
Metallic pigmented coatings	500
Multicolor coatings	250
Pretreatment wash primers	420
Primers, sealers, and undercoaters	100
Reactive penetrating sealers	350
Recycled coatings	250
Roof coatings	50
Rust preventative coatings	250
Shellacs Clear Opaque	730 550
Specialty primers, sealers and undercoaters	100
Stains	250
Stone consolidants	450
Swimming pool coatings	340
Traffic marking coatings	100
Tub and tile refinish coatings	420
Waterproofing membranes	250
Wood coatings	275
Wood preservatives	350
Zinc-rich primers	340

1. Grams of VOC per liter of coating, including water and including exempt compounds.
2. The specified limits remain in effect unless revised limits are listed in subsequent columns in the table.
3. Values in this table are derived from those specified by the California Air Resources Board, Architectural Coatings Suggested Control Measure, February 1, 2000. More information is available from the Air Resources Board.

Construction Waste Management (CWM) Plan

Fill out the form including diversion rate and facility names and addresses

Project Name: PHAM RESIDENCE
Job #: DEV21-1318
Project Manager: DUC NGUYEN
Waste Hauling Company: FRANCO PAYLESS SERVICES
Contact Name: MARTIN FRANCO

Legend:
Hauling Company
Sorting Facility Name and Location
Disposal Service Company

All Subcontractors shall comply with the project's Construction Waste Management Plan.
All Subcontractor foremen shall sign the CWM Plan Acknowledgment Sheet.

Subcontractors who fail to comply with the Waste Management Plan will be subject to backcharges or withholding of payment, as deemed appropriate. For instance, Subcontractors who contaminate debris boxes that have been designated for a single material type will be subject to backcharge or withheld payment, as deemed appropriate.

1. The project's overall rate of waste diversion will be 65 %.
2. This project shall generate the least amount of waste possible by planning and ordering carefully; following all proper storage and handling procedures to reduce broken and damaged materials and reusing materials whenever possible. The majority of the waste that is generated on this jobsite will be diverted from the landfill and recycled for other use.
3. Spreadsheet 1, enclosed, identifies the waste materials that will be generated on this project, the diversion strategy for each waste type and the anticipated diversion rate.
4. Waste prevention and recycling activities will be discussed at the beginning of weekly subcontractor meetings. As each new subcontractor comes on-site, the WMP Coordinator will present him/her with a copy of the CWM Plan and provide a tour of the jobsite to identify materials to be salvaged and the procedures for handling jobsite debris. All Subcontractor foremen will acknowledge in writing that they have read and will abide by the CWM Plan. Subcontractor Acknowledgment Sheet enclosed. The CWM Plan will be posted at the jobsite trailer.
5. Salvage: Excess materials that cannot be used in the project, nor returned to the vendor, will be offered to site workers, the owner, or donated to charity if feasible.
6. FRANCO PAYLESS SERVICES will provide a commingled drop box at the jobsite for most of the construction waste. These commingled drop boxes will be taken to MISSION TRAIL WASTE SYSTEMS. The average diversion rate for commingled waste will be 65 %. As site conditions permit, additional drop boxes will be used for particular phases of construction (e.g., concrete and wood waste) to ensure the highest waste diversion rate possible.
7. In the event that the waste diversion rate achievable via the strategy described in (6) above, is projected to be lower than what is required, then a strategy of source-separated waste diversion and/or waste stream reduction will be implemented. Source separated waste refers to jobsite waste that is not commingled but is instead allocated to a debris box designated for a single material type, such as clean wood or metal.

   Notes:
   1. Waste stream reduction refers to efforts taken by the builder to reduce the amount of waste generated by the project to below four (4) pounds per square foot of building area.
   2. When using waste stream reduction measures, the gross weight of the product is subtracted from a base weight of four (4) pounds per square foot of building area. This reduction is considered additional diversion and can be used in the waste reduction percentage calculations.
8. FRANCO PAYLESS SERVICES will track and calculate the quantity (in tons) of all waste leaving the project and calculate the waste diversion rate for the project. FRANCO PAYLESS SERVICES will provide Project Manager with an updated monthly report on gross weight hauled and the waste diversion rate being achieved on the project. FRANCO PAYLESS SERVICES monthly report will track separately the gross weights and diversion rates for commingled debris and for each source-separated waste stream leaving the project. In the event that FRANCO PAYLESS SERVICES does not service any or all of the debris boxes on the project, the FRANCO PAYLESS SERVICES will work with the responsible parties to track the material type and weight (in tons) in such debris boxes in order to determine waste diversion rates for these materials.
9. In the event that Subcontractors furnish their own debris boxes as part of their scope of work, such Subcontractors shall not be excluded from complying with the CWM Plan and will provide FRANCO PAYLESS SERVICES weight and waste diversion data for their debris boxes.
10. In the event that site use constraints (such as limited space) restrict the number of debris boxes that can be used for collection of designated waste the project Superintendent will, as deemed appropriate, allocate specific areas onsite where individual material types are to be consolidated. These collection points are not to be contaminated with non designated waste types.
11. Debris from jobsite office and meeting rooms will be collected by FRANCO PAYLESS SERVICES FRANCO PAYLESS SERVICES FRANCO PAYLESS SERVICES will, at a minimum, recycle office paper, plastic, metal and cardboard.

Construction Waste Management (CWM) Worksheet

Project Name: PHAM RESIDENCE
Job Number: DEV21-1318
Project Manager: DUC NGUYEN
Waste Hauling Company: FRANCO PAYLESS SERVICES
Construction Waste Management (CWM) Plan

WASTE MATERIAL TYPE	DIVERSION METHOD: COMMINGLED AND SORTED OFF SITE	DIVERSION METHOD: SOURCE SEPARATED ON SITE	PROJECTED DIVERSION RATE
Asphalt			
Concrete			
Shoterete			
Metals			
Wood			
Rigid insulation			
Fiberglass insulation			
Acoustic ceiling tile			
Gypsum drywall			
Carpet/carpet pad			
Plastic pipe			
Plastic buckets			
Plastic			
Hardiplank siding and boards			
Glass			
Cardboard			
Pallets			
Job office trash, paper, glass & plastic bottles, cans, plastic			
Alkaline and rechargeable batteries, toner cartridges, and electronic devices			
Other:			
Other:			
Other:			
Other:			

Construction Waste Management (CWM) Acknowledgment

Note: This sample form may be used to assist in documenting compliance with the waste management plan.

Project Name: PHAM RESIDENCE
Job Number: DEV21-1318
Project Manager: DUC NGUYEN
Waste Hauling Company: FRANCO PAYLESS SERVICES
CWM Plan Acknowledgment

The Foreman for each new Subcontractor that comes on site is to receive a copy of the Construction Waste Management Plan and complete this Acknowledgment Form.

I have read the Waste Management Plan for the project; I understand the goals of this plan and agree to follow the procedures described in this plan.

DATE	SUBCONTRACTOR COMPANY NAME	FOREMAN NAME	SIGNATURE

CALGREEN 2019 NOTES – MANDATORY REQUIREMENTS:

1. PROJECTS WHICH DISTURB LESS THAN ONE ACRE OF SOIL AND ARE NOT PART OF A LARGER COMMON PLAN OF DEVELOPMENT WHICH IN TOTAL DISTURBS ONE ACRE OR MORE, SHALL MANAGE STORM WATER DRAINAGE DURING CONSTRUCTION. SEE CALGREEN 4.106.2 FOR FURTHER DETAILS.

2. CONSTRUCTION PLANS SHALL INDICATE HOW THE SITE GRADING OR DRAINAGE SYSTEM WILL MANAGE ALL SURFACE WATER FLOWS TO KEEP WATER FROM ENTERING BUILDINGS. SWALES, WATER COLLECTION AND DISPOSAL SYSTEMS, FRENCH DRAINS, WATER RETENTION GARDENS, AND OTHER MEASURES CAN BE USED. EXCEPTION: ADDITIONS AND ALTERATIONS NOT ALTERING THE DRAINAGE PATH.

3. NEW CONSTRUCTION SHALL COMPLY WITH CALGREEN SECTION 4.106.4.1 TO FACILITATE FUTURE INSTALLATION AND USE OF EV CHARGERS. ELECTRIC VEHICLE SUPPLY EQUIPMENT (EVSE) SHALL BE INSTALLED IN ACCORDANCE WITH THE CALIFORNIA ELECTRICAL CODE, ARTICLE 625.

EXCEPTIONS:

A. WHERE COUNTY OF SANTA CLARA HAS DETERMINED EV CHARGING AND INFRASTRUCTURE ARE NOT FEASIBLE.
B. ACCESSORY DWELLING UNITS (ADU) AND JUNIOR ACCESSORY DWELLING UNITS (JADU) WITHOUT ADDITIONAL PARKING FACILITIES.

4. FOR EACH DWELLING UNIT, INSTALL A LISTED RACEWAY TO ACCOMMODATE A DEDICATED 208/240-VOLT BRANCH CIRCUIT. THE RACEWAY SHALL NOT BE LESS THAN TRADE SIZE 1 (NOMINAL 1-INCH INSIDE DIAMETER). THE RACEWAY SHALL ORIGINATE AT THE MAIN SERVICE OR SUBPANEL AND SHALL TERMINATE INTO A LISTED CABINET, BOX OR OTHER ENCLOSURE IN CLOSE PROXIMITY TO THE PROPOSED LOCATION OF AN EV CHARGER. RACEWAYS ARE REQUIRED TO BE CONTINUOUS AT ENCLOSED, INACCESSIBLE OR CONCEALED AREAS AND SPACES. THE SERVICE PANEL AND/OR SUBPANEL SHALL PROVIDE CAPACITY TO INSTALL A 40-AMPERE MINIMUM DEDICATED BRANCH CIRCUIT AND SPACE(S) RESERVED TO PERMIT INSTALLATION OF A BRANCH CIRCUIT OVERCURRENT PROTECTIVE DEVICE. THE RACEWAY TERMINATION LOCATION SHALL BE PERMANENTLY AND VISIBLY MARKED AS "EV CAPABLE".

THE SERVICE PANEL OR SUB-PANEL CIRCUIT DIRECTORY SHALL IDENTIFY THE OVER CURRENT PROTECTIVE DEVICE SPACE(S) RESERVED FOR FUTURE EV CHARGING AS "EV CAPABLE". THE RACEWAY TERMINATION LOCATION SHALL BE PERMANENTLY AND VISIBLY MARKED AS "EV CAPABLE".

5. ALL NONCOMPLIANT PLUMBING FIXTURES SHALL BE REPLACED WITH WATER-CONSERVING PLUMBING FIXTURES. PLUMBING FIXTURE REPLACEMENT IS REQUIRED PRIOR TO ISSUANCE OF A CERTIFICATE OF FINAL COMPLETION, CERTIFICATE OF OCCUPANCY, OR FINAL PERMIT APPROVAL BY BUILDING AND INSPECTION DIVISION. SEE CIVIL CODE SECTION 1101.1, ET SEQ., FOR THE DEFINITION OF A NONCOMPLIANT PLUMBING FIXTURE, TYPES OF RESIDENTIAL BUILDINGS AFFECTED AND OTHER IMPORTANT ENACTMENT DATES.

A. THE EFFECTIVE FLUSH VOLUME OF ALL WATER CLOSETS SHALL NOT EXCEED 1.28 GALLONS PER FLUSH. TANK-TYPE WATER CLOSETS SHALL BE CERTIFIED TO THE PERFORMANCE CRITERIA OF THE U.S. EPA WATERSENSE SPECIFICATION FOR TANK-TYPE TOILETS.
B. SHOWERHEADS SHALL HAVE A MAXIMUM FLOW RATE OF NOT MORE THAN 1.8 GALLONS PER MINUTE AT 80 PSI. SHOWERHEADS SHALL BE CERTIFIED TO THE PERFORMANCE CRITERIA OF THE U.S. EPA WATERSENSE SPECIFICATION FOR SHOWERHEADS.
C. WHEN A SHOWER IS SERVED BY MORE THAN ONE SHOWERHEAD, THE COMBINED FLOW RATE OF ALL SHOWER-HEADS AND/OR OTHER SHOWER OUTLETS CONTROLLED BY A SINGLE VALVE SHALL NOT EXCEED 1.8 GALLONS PER MINUTE AT 80 PSI, OR THE SHOWER SHALL BE DESIGNED TO ALLOW ONLY ONE SHOWER OUTLET TO BE IN OPERATION AT A TIME. A HAND-HELD SHOWER SHALL BE CONSIDERED A SHOWERHEAD.
D. THE MAXIMUM FLOW RATE OF RESIDENTIAL LAVATORY FAUCETS SHALL NOT EXCEED 1.2 GALLONS PER MINUTE AT 60 PSI. THE MINIMUM FLOW RATE OF RESIDENTIAL LAVATORY FAUCETS SHALL NOT BE LESS THAN 0.8 GALLONS PER MINUTE AT 20 PSI.
E. THE MAXIMUM FLOW RATE OF KITCHEN FAUCETS SHALL NOT EXCEED 1.8 GALLONS PER MINUTE AT 60 PSI. KITCHEN FAUCETS MAY TEMPORARILY INCREASE THE FLOW ABOVE THE MAXIMUM RATE, BUT NOT TO EXCEED 2.2 GALLONS PER MINUTE AT 60 PSI, AND MUST DEFAULT TO A MAXIMUM FLOW RATE OF 1.8 GALLONS PER MINUTE AT 60 PSI.

6. PLUMBING FIXTURES AND FITTINGS SHALL BE INSTALLED IN ACCORDANCE WITH THE CALIFORNIA PLUMBING CODE, AND SHALL MEET THE APPLICABLE STANDARDS REFERENCED IN TABLE 1701.1 OF THE CALIFORNIA PLUMBING CODE.

7. RESIDENTIAL DEVELOPMENTS SHALL COMPLY WITH A LOCAL WATER EFFICIENT LANDSCAPE ORDINANCE OR THE CURRENT CALIFORNIA DEPARTMENT OF WATER RESOURCES' MODEL WATER EFFICIENT LANDSCAPE ORDINANCE (MWELO), WHICHEVER IS MORE STRINGENT.

8. NEWLY CONSTRUCTED RESIDENTIAL DEVELOPMENTS, WHERE DISINFECTED TERTIARY RECYCLED WATER IS AVAILABLE FROM A MUNICIPAL SOURCE TO A CONSTRUCTION SITE, MAY BE REQUIRED TO HAVE RECYCLED WATER SUPPLY SYSTEMS INSTALLED, ALLOWING THE USE OF RECYCLED WATER FOR RESIDENTIAL LANDSCAPE IRRIGATION SYSTEMS. SEE CHAPTER 15 OF THE CALIFORNIA PLUMBING CODE.

9. ANNULAR SPACES AROUND PIPES, ELECTRIC CABLES, CONDUITS OR OTHER OPENINGS IN SOLE/BOTTOM PLATES AT EXTERIOR WALLS SHALL BE PROTECTED AGAINST THE PASSAGE OF RODENTS BY CLOSING SUCH OPENINGS WITH CEMENT MORTAR, CONCRETE MASONRY OR A SIMILAR METHOD ACCEPTABLE TO THE COUNTY OF SANTA CLARA.

10. RECYCLE AND/OR SALVAGE FOR REUSE A MINIMUM OF 65 PERCENT OF THE NONHAZARDOUS CONSTRUCTION AND DEMOLITION WASTE IN ACCORDANCE WITH CALGREEN SECTION 4.408.2 OR 4.408.3.

A. A CONSTRUCTION WASTE MANAGEMENT PLAN IS PROVIDED. THE CONSTRUCTION WASTE MANAGEMENT PLAN SHALL BE UPDATED AS NECESSARY AND SHALL BE AVAILABLE DURING CONSTRUCTION FOR EXAMINATION BY THE COUNTY OF SANTA CLARA.
   1. IDENTIFY THE CONSTRUCTION AND DEMOLITION WASTE MATERIALS TO BE DIVERTED FROM DISPOSAL BY RECYCLING, REUSE ON THE PROJECT OR SALVAGE FOR FUTURE USE OR SALE.
   2. SPECIFY IF CONSTRUCTION AND DEMOLITION WASTE MATERIALS WILL BE SORTED ON-SITE (SOURCE-SEPARATED) OR BULK MIXED (SINGLE STREAM).
   3. IDENTIFY DIVERSION FACILITIES WHERE THE CONSTRUCTION AND DEMOLITION WASTE MATERIAL WILL BE TAKEN.
   4. IDENTIFY CONSTRUCTION METHODS EMPLOYED TO REDUCE THE AMOUNT OF CONSTRUCTION AND DEMOLITION WASTE GENERATED.
   5. Specify that the amount of construction and demolition waste materials diverted shall be calculated by weight or volume, but not by both.
B. A WASTE MANAGEMENT COMPANY CAN BE UTILIZED IF APPROVED BY THE COUNTY OF SANTA CLARA. SEE CALGREEN 4.408.3 FOR FURTHER .DETAILS

11. DOCUMENTATION SHALL BE PROVIDED TO THE COUNTY OF SANTA CLARA WHICH DEMONSTRATES COMPLIANCE WITH NOTE 10.

12. AT THE TIME OF FINAL INSPECTION, A MANUAL, COMPACT DISC, WEB-BASED REFERENCE OR OTHER MEDIA ACCEPTABLE TO THE COUNTY OF SANTA CLARA INCLUDES ALL OF THE REQUIRED INFORMATION, SHALL BE PLACED IN THE BUILDING. SEE CALGREEN 4.410.1 FOR DETAILS OF REQUIRED INFORMATION.

13. ANY INSTALLED GAS FIREPLACE SHALL BE A DIRECT-VENT SEALED-COMBUSTION TYPE. ANY INSTALLED WOODSTOVE OR PELLET STOVE SHALL COMPLY WITH U.S. EPA NEW SOURCE PERFORMANCE STANDARDS (NSPS) EMISSION LIMITS AS APPLICABLE, AND SHALL HAVE A PERMANENT LABEL INDICATING THEY ARE CERTIFIED TO MEET THE EMISSION LIMITS. WOODSTOVES, PELLET STOVES AND FIREPLACES SHALL ALSO COMPLY WITH APPLICABLE SANTA CLARA COUNTY ORDINANCES AND BAY AREA AIR QUALITY MANAGEMENT DISTRICT REGULATION 6, RULE 3.

14. AT THE TIME OF ROUGH INSTALLATION, DURING STORAGE ON THE CONSTRUCTION SITE AND UNTIL FINAL STARTUP OF THE HEATING, COOLING AND VENTILATING EQUIPMENT, ALL DUCT AND OTHER RELATED AIR DISTRIBUTION COMPONENT OPENINGS SHALL BE COVERED WITH TAPE, PLASTIC, SHEET METAL OR OTHER METHODS ACCEPTABLE TO THE COUNTY OF SANTA CLARA TO REDUCE THE AMOUNT OF WATER, DUST AND DEBRIS, WHICH MAY ENTER THE SYSTEM.

15. ADHESIVES, SEALANTS AND CAULKS USED ON THE PROJECT SHALL MEET THE REQUIREMENTS OF CALGREEN TABLES 4.504.1 OR 4.504.2 AS REPRODUCED ON SHEET CG-1. SUCH PRODUCTS ALSO SHALL COMPLY WITH THE RULE 1168 PROHIBITION ON THE USE OF CERTAIN TOXIC COMPOUNDS (CHLOROFORM, ETHYLENE DICHLORIDE, METHYLENE CHLORIDE, PERCHLOROETHYLENE AND TRICHLOROETHYLENE), EXCEPT FOR AEROSOL PRODUCTS, AS SPECIFIED BELOW.

AEROSOL ADHESIVES, AND SMALLER UNIT SIZES OF ADHESIVES, AND SEALANT OR CAULKING COMPOUNDS (IN UNITS OF PRODUCT, LESS PACKAGING, WHICH DO NOT WEIGH MORE THAN 1 POUND AND DO NOT CONSIST OF MORE THAN 16 FLUID OUNCES) SHALL COMPLY WITH STATEWIDE VOC STANDARDS AND OTHER REQUIREMENTS, INCLUDING PROHIBITIONS ON USE OF CERTAIN TOXIC COMPOUNDS, OF CALIFORNIA CODE OF REGULATIONS, TITLE 17, COMMENCING WITH SECTION 94507.

16. ARCHITECTURAL PAINTS AND COATINGS SHALL COMPLY WITH VOC LIMITS AS SHOWN IN TABLE 4.504.3 SHEET CG-1. THE VOC CONTENT LIMIT FOR COATINGS THAT DO NOT MEET THE DEFINITIONS FOR THE SPECIALTY COATINGS CATEGORIES LISTED IN TABLE 4.504.3 SHALL BE DETERMINED BY CLASSIFYING THE COATING AS A FLAT, NONFLAT OR NONFLAT-HIGH GLOSS COATING, BASED ON ITS GLOSS, AS DEFINED IN SUBSECTIONS 4.21, 4.36, AND 4.37 OF THE 2007 CALIFORNIA AIR RESOURCES BOARD, SUGGESTED CONTROL MEASURE, AND THE CORRESPONDING FLAT, NONFLAT OR NON-FLAT-HIGH GLOSS VOC LIMIT IN TABLE 4.504.3, SHEET CG-1 SHALL APPLY.

17. AEROSOL PAINTS AND COATINGS SHALL MEET THE PRODUCT-WEIGHTED MIR LIMITS FOR ROC IN SECTION 94522(A)(2) AND OTHER REQUIREMENTS, INCLUDING PROHIBITIONS ON USE OF CERTAIN TOXIC COMPOUNDS AND OZONE DEPLETING SUBSTANCES, IN SECTIONS 94522(E)(1) AND (F)(1) OF CALIFORNIA CODE OF REGULATIONS, TITLE 17, COMMENCING WITH SECTION 94520; AND IN AREAS UNDER THE JURISDICTION OF THE BAY AREA AIR QUALITY MANAGEMENT DISTRICT ADDITIONALLY COMPLY WITH THE PERCENT VOC BY WEIGHT OF PRODUCT LIMITS OF REGULATION 8, RULE 49.

18. VERIFICATION OF COMPLIANCE WITH NOTES 15, 16, AND 17 SHALL BE PROVIDED AT THE REQUEST OF THE COUNTY OF SANTA CLARA.

19. ALL CARPET INSTALLED IN THE BUILDING INTERIOR SHALL MEET THE TESTING AND PRODUCT REQUIREMENTS OF ONE OF THE FOLLOWING:

A. CARPET AND RUG INSTITUTE'S GREEN LABEL PLUS PROGRAM.
B. CALIFORNIA DEPARTMENT OF PUBLIC HEALTH, "STANDARD METHOD FOR THE TESTING AND EVALUATION OF VOLATILE ORGANIC CHEMICAL EMISSIONS FROM INDOOR SOURCES USING ENVIRONMENTAL CHAMBERS," VERSION 1.1, FEBRUARY 2010 (ALSO KNOWN AS SPECIFICATION 01350.)
C. NSF/ANSI 140 AT THE GOLD LEVEL.
D. SCIENTIFIC CERTIFICATIONS SYSTEMS INDOOR ADVANTAGE GOLD.

ALL CARPET CUSHION INSTALLED IN THE BUILDING INTERIOR SHALL MEET THE REQUIREMENTS OF THE CARPET AND RUG INSTITUTE'S GREEN LABEL PROGRAM. ALL CARPET ADHESIVE SHALL MEET THE REQUIREMENTS OF TABLE 4.504.1, SHEET CG-1.

20. WHERE RESILIENT FLOORING IS INSTALLED, AT LEAST 80 PERCENT OF FLOOR AREA RECEIVING RESILIENT FLOORING SHALL COMPLY WITH ONE OR MORE OF THE FOLLOWING:

A. PRODUCTS COMPLIANT WITH THE CALIFORNIA DEPARTMENT OF PUBLIC HEALTH, "STANDARD METHOD FOR THE TESTING AND EVALUATION OF VOLATILE ORGANIC CHEMICAL EMISSIONS FROM INDOOR SOURCES USING ENVIRONMENTAL CHAMBERS," VERSION 1.1, FEBRUARY 2010 (ALSO KNOWN AS SPECIFICATION 01350), CERTIFIED AS A CHPS LOW-EMITTING MATERIAL IN THE COLLABORATIVE FOR HIGH PERFORMANCE SCHOOLS (CHPS) HIGH PERFORMANCE PRODUCTS DATABASE.
B. PRODUCTS CERTIFIED UNDER UL GREENGUARD GOLD (FORMERLY THE GREENGUARD CHILDREN & SCHOOLS PROGRAM).
C. CERTIFICATION UNDER THE RESILIENT FLOOR COVERING INSTITUTE (RFCI) FLOORSCORE PROGRAM.
D. MEET THE CALIFORNIA DEPARTMENT OF PUBLIC HEALTH, "STANDARD METHOD FOR THE TESTING AND EVALUATION OF VOLATILE ORGANIC CHEMICAL EMISSIONS FROM INDOOR SOURCES USING ENVIRONMENTAL CHAMBERS," VERSION 1.1, FEBRUARY 2010 (ALSO KNOWN AS SPECIFICATION 01350).

21. HARDWOOD PLYWOOD, PARTICLEBOARD AND MEDIUM DENSITY FIBERBOARD COMPOSITE WOOD PRODUCTS USED ON THE INTERIOR OR EXTERIOR OF THE BUILDING SHALL MEET THE REQUIREMENTS FOR FORMALDEHYDE AS SPECIFIED IN TABLE 4.504.5 SHEET CG-1.

22. VERIFICATION OF COMPLIANCE WITH NOTE 21 SHALL BE PROVIDED AT THE REQUEST OF THE COUNTY OF SANTA CLARA.

23. CONCRETE SLAB FOUNDATIONS REQUIRED TO HAVE A VAPOR RETARDER BY CBC, CHAPTER 19 OR CONCRETE SLAB-ON-GROUND FLOORS REQUIRED TO HAVE A VAPOR RETARDER BY CRC CHAPTER 5, SHALL COMPLY WITH FOLLOWING REQUIREMENT:

A CAPILLARY BREAK SHALL BE INSTALLED IN COMPLIANCE WITH AT LEAST ONE OF THE FOLLOWING:

A. A 4-INCH-THICK BASE OF 1/2 INCH OR LARGER CLEAN AGGREGATE SHALL BE PROVIDED WITH A VAPOR RETARDER IN DIRECT CONTACT WITH CONCRETE AND A CONCRETE MIX DESIGN, WHICH WILL ADDRESS BLEEDING, SHRINKAGE, AND CURLING, SHALL BE USED.
B. A SLAB DESIGN SPECIFIED BY THE LICENSED DESIGN PROFESSIONAL.

24. BUILDING MATERIALS WITH VISIBLE SIGNS OF WATER DAMAGE SHALL NOT BE INSTALLED. WALL AND FLOOR FRAMING SHALL NOT BE ENCLOSED WHEN THE FRAMING MEMBERS EXCEED 19 PERCENT MOISTURE CONTENT. INSULATION PRODUCTS WHICH ARE VISIBLY WET OR HAVE A HIGH MOISTURE CONTENT SHALL BE REPLACED OR ALLOWED TO DRY PRIOR TO ENCLOSURE IN WALL OR FLOOR CAVITIES. WET-APPLIED INSULATION PRODUCTS SHALL FOLLOW THE MANUFACTURERS' DRYING RECOMMENDATIONS PRIOR TO ENCLOSURE.

25. EACH BATHROOM SHALL BE MECHANICALLY VENTILATED AND SHALL COMPLY WITH THE FOLLOWING:

A. FANS SHALL BE ENERGY STAR COMPLIANT AND BE DUCTED TO TERMINATE OUTSIDE THE BUILDING.
B. UNLESS FUNCTIONING AS A COMPONENT OF A WHOLE HOUSE VENTILATION SYSTEM, FANS MUST BE CONTROLLED BY A HUMIDITY CONTROL.
   1. HUMIDITY CONTROLS SHALL BE CAPABLE OF ADJUSTMENT BETWEEN A RELATIVE HUMIDITY RANGE OF ≤ 50 PERCENT TO A MAXIMUM OF 80 PERCENT. A HUMIDITY CONTROL MAY UTILIZE MANUAL OR AUTOMATIC MEANS OF ADJUSTMENT.
   2. A HUMIDITY CONTROL MAY BE A SEPARATE COMPONENT TO THE EXHAUST FAN AND IS NOT REQUIRED TO BE INTEGRAL.

26. HEATING AND AIR-CONDITIONING SYSTEMS SHALL BE SIZED, DESIGNED AND HAVE THEIR EQUIPMENT SELECTED USING THE FOLLOWING METHODS:

A. THE HEAT LOSS AND HEAT GAIN IS ESTABLISHED ACCORDING TO ANSI/ACCA 2 MANUAL J—2016 (RESIDENTIAL LOAD CALCULATION), ASHRAE HANDBOOKS OR OTHER EQUIVALENT DESIGN SOFTWARE OR METHODS.
B. DUCT SYSTEMS ARE SIZED ACCORDING TO ANSI/ACCA 1 MANUAL D—2016 (RESIDENTIAL DUCT SYSTEMS), ASHRAE HANDBOOKS OR OTHER EQUIVALENT DESIGN SOFTWARE OR METHODS.
C. SELECT HEATING AND COOLING EQUIPMENT ACCORDING TO ANSI/ACCA 3 MANUAL S—2014 (RESIDENTIAL EQUIPMENT SELECTION) OR OTHER EQUIVALENT DESIGN SOFTWARE OR METHODS.

27. HVAC SYSTEM INSTALLERS SHALL BE TRAINED AND CERTIFIED IN THE PROPER INSTALLATION OF HVAC SYSTEMS INCLUDING DUCTS AND EQUIPMENT BY A NATIONALLY OR REGIONALLY RECOGNIZED TRAINING OR CERTIFICATION PROGRAM. UNCERTIFIED PERSONS MAY PERFORM HVAC INSTALLATIONS WHEN UNDER THE DIRECT SUPERVISION AND RESPONSIBILITY OF A PERSON TRAINED AND CERTIFIED TO INSTALL HVAC SYSTEMS OR CONTRACTOR LICENSED TO INSTALL HVAC SYSTEMS.

28. IF REQUIRED BY THE COUNTY OF SANTA CLARA, THE OWNER OR THE RESPONSIBLE ENTITY ACTING AS THE OWNER'S AGENT SHALL EMPLOY ONE OR MORE SPECIAL INSPECTORS TO PROVIDE INSPECTION OR OTHER DUTIES NECESSARY TO SUBSTANTIATE COMPLIANCE WITH THIS CODE. SPECIAL INSPECTORS SHALL DEMONSTRATE COMPETENCE TO THE SATISFACTION OF THE COUNTY OF SANTA CLARA FOR THE PARTICULAR TYPE OF INSPECTION OR TASK TO BE PERFORMED. SPECIAL INSPECTORS SHALL BE INDEPENDENT ENTITIES WITH NO FINANCIAL INTEREST IN THE MATERIALS OR THE PROJECT THEY ARE INSPECTING FOR COMPLIANCE WITH THIS CODE.

29. DOCUMENTATION USED TO SHOW COMPLIANCE WITH THIS CODE SHALL INCLUDE BUT IS NOT LIMITED TO, CONSTRUCTION DOCUMENTS, PLANS, SPECIFICATIONS, BUILDER OR INSTALLER CERTIFICATION, INSPECTION REPORTS, OR OTHER METHODS ACCEPTABLE TO THE COUNTY OF SANTA CLARA WHICH DEMONSTRATE SUBSTANTIAL CONFORMANCE. WHEN SPECIFIC DOCUMENTATION OR SPECIAL INSPECTION IS NECESSARY TO VERIFY COMPLIANCE, THAT METHOD OF COMPLIANCE WILL BE SPECIFIED IN THE APPROPRIATE SECTION OR IDENTIFIED IN THE APPLICATION CHECKLIST.

Project Information

REGISTERED PROFESSIONAL ENGINEER
JYH-RONG YANG
No. C 48655
Exp. 06/30/22
CIVIL
STATE OF CALIFORNIA
Jerry Yang, P.E.; G.E.

REVISION TABLE

NUMBER	DATE	REVISED BY	DESCRIPTION
1	06.22.22	EDS	REVISION 1

ELITE DESIGN STUDIO

PHAM RESIDENCE
16190 WOOD ACRES RD
LOS GATOS CA 95030

DATE:
7/11/22

SCALE:

SHEET:

CALGREEN 2019 NOTES – TIER 1 REQUIREMENTS:

1. SITE WHICH COMPLIES WITH AT LEAST ONE OF THE FOLLOWING CHARACTERISTICS SHALL BE SELECTED:

A. AN INFILL SITE.
B. A GREYFIELD SITE.
C. AN EPA-RECOGNIZED AND REMEDIATED BROWNFIELD SITE.

2. FACILITATE COMMUNITY CONNECTIVITY BY ONE OF THE FOLLOWING METHODS:

A. LOCATE PROJECT WITHIN A ¼ MILE TRUE WALKING DISTANCE OF AT LEAST FOUR BASIC SERVICES, READILY ACCESSIBLE BY PEDESTRIANS.
B. LOCATE PROJECT WITHIN A ½ MILE TRUE WALKING DISTANCE OF AT LEAST SEVEN BASIC SERVICES, READILY ACCESSIBLE BY PEDESTRIANS.
C. OTHER METHODS INCREASING ACCESS TO ADDITIONAL RESOURCES.

EXAMPLES OF SERVICES INCLUDE, BUT ARE NOT LIMITED TO, BANK, PLACE OF WORSHIP, CONVENIENCE GROCERY, DAY CARE, CLEANERS, FIRE STATION, BARBER SHOP, BEAUTY SHOP, HARDWARE STORE, LAUNDRY, LIBRARY, MEDICAL CLINIC, DENTAL CLINIC, SENIOR CARE FACILITY, PARK, PHARMACY, POST OFFICE, RESTAURANT, SCHOOL, SUPERMARKET, THEATER, COMMUNITY CENTER, FITNESS CENTER, MUSEUM OR FARMERS MARKET.

3. INDIVIDUALS WITH OVERSIGHT AUTHORITY ON THE PROJECT WHO HAVE BEEN TRAINED IN AREAS RELATED TO ENVIRONMENTALLY FRIENDLY DEVELOPMENT SHALL TEACH GREEN CONCEPTS TO OTHER MEMBERS OF THE DEVELOPMENT STAFF AND ENSURE THAT TRAINING IS PROVIDED TO ALL PARTIES ASSOCIATED WITH THE DEVELOPMENT OF THE PROJECT.

PRIOR TO BEGINNING THE CONSTRUCTION ACTIVITIES, ALL PARTIES INVOLVED WITH THE DEVELOPMENT PROCESS SHALL RECEIVE A WRITTEN GUIDELINE AND INSTRUCTION SPECIFYING THE GREEN GOALS OF THE PROJECT.

4. THE SALVAGED MATERIALS FROM DECONSTRUCTION OF EXISTING BUILDINGS ON THE SITE SHALL BE REUSED. REUSED MATERIALS OR PRODUCTS MUST COMPLY WITH CURRENT BUILDING STANDARDS REQUIREMENTS OR BE AN ACCEPTED ALTERNATE METHOD OR MATERIAL.

MATERIALS WHICH CAN BE EASILY REUSED INCLUDE BUT ARE NOT LIMITED TO THE FOLLOWING:

A. LIGHT FIXTURES.
B. PLUMBING FIXTURES.
C. DOORS AND TRIM.
D. MASONRY.
E. ELECTRICAL DEVICES.
F. APPLIANCES.
G. FOUNDATIONS OR PORTIONS OF FOUNDATIONS.

REUSED MATERIAL MUST BE IN COMPLIANCE WITH THE APPROPRIATE TITLE 24 REQUIREMENTS.

5. BUILDING SITE SOIL ANALYSIS SHALL BE PERFORMED BY A LICENSED DESIGN PROFESSIONAL AND THE FINDINGS SHALL BE UTILIZED IN THE STRUCTURAL DESIGN OF THE BUILDING.

6. THE EFFECT OF DEVELOPMENT ON BUILDING SITES SHALL BE EVALUATED AND THE SOIL SHALL BE PROTECTED BY ONE OR MORE OF THE FOLLOWING:

A. NATURAL DRAINAGE PATTERNS SHALL BE EVALUATED AND EROSION CONTROLS SHALL BE IMPLEMENTED TO MINIMIZE EROSION DURING CONSTRUCTION AND AFTER OCCUPANCY.
B. SITE ACCESS SHALL BE ACCOMPLISHED BY MINIMIZING THE AMOUNT OF CUT AND FILL NEEDED TO INSTALL ACCESS ROADS AND DRIVEWAYS.
C. AS ALLOWED BY OTHER PARTS OF THE CALIFORNIA BUILDING STANDARDS CODE, UNDERGROUND CONSTRUCTION ACTIVITIES SHALL BE COORDINATED TO UTILIZE THE SAME TRENCH, MINIMIZE THE AMOUNT OF TIME THE DISTURBED SOIL IS EXPOSED AND THE SOIL SHALL BE REPLACED USING ACCEPTED COMPACTION METHODS.

7. TOPSOIL SHALL BE PROTECTED OR SAVED FOR REUSE. DISPLACED TOPSOIL SHALL BE STOCKPILED FOR REUSE IN A DESIGNATED AREA AND COVERED OR PROTECTED FROM EROSION. PROTECTION FROM EROSION INCLUDES COVERING WITH TARPS, STRAW, MULCH, CHIPPED WOOD, VEGETATIVE COVER, OR OTHER MEANS ACCEPTABLE TO THE COUNTY OF SANTA CLARA TO PROTECT THE TOPSOIL FOR LATER USE.

8. POSTCONSTRUCTION LANDSCAPE DESIGNS SHALL ACCOMPLISH ONE OR MORE OF THE FOLLOWING:

A. AREAS DISRUPTED DURING CONSTRUCTION SHALL BE RESTORED TO BE CONSISTENT WITH NATIVE VEGETATION SPECIES AND PATTERNS.
B. UTILIZE AT LEAST 75 PERCENT NATIVE CALIFORNIA OR DROUGHT TOLERANT PLANT AND TREE SPECIES APPROPRIATE FOR THE CLIMATE ZONE REGION.

9. PERMEABLE PAVING SHALL BE UTILIZED FOR NOT LESS THAN 20 PERCENT OF THE TOTAL PARKING, WALKING OR PATIO SURFACES

THE PRIMARY DRIVEWAY, PRIMARY ENTRY WALKWAY AND ENTRY PORCH OR LANDING SHALL NOT BE INCLUDED WHEN CALCULATING THE AREA REQUIRED TO BE A PERMEABLE SURFACE.

10. INSTALL A VEGETATED ROOF FOR AT LEAST 50 PERCENT OF THE ROOF AREA. VEGETATED ROOFS SHALL COMPLY WITH REQUIREMENTS FOR ROOF GARDENS AND LANDSCAPED ROOFS IN THE CALIFORNIA BUILDING CODE, CHAPTER 15 AND CHAPTER 16.

11. REDUCE NONROOF HEAT ISLANDS FOR 50 PERCENT OF SIDEWALKS, PATIOS, DRIVEWAYS OR OTHER PAVED AREAS BY USING ONE OR MORE OF THE METHODS LISTED.

A. TREES OR OTHER PLANTINGS TO PROVIDE SHADE AND THAT MATURE WITHIN 15 YEARS OF PLANTING. TREES SHOULD BE NATIVE OR ADAPTIVE TO THE REGION AND CLIMATE ZONES AND NONINVASIVE; HARDY AND RESISTANT TO DROUGHT, INSECTS AND DISEASE; EASY TO MAINTAIN (NO FREQUENT SHEDDING OF TWIGS, BRANCHES, UNWANTED FRUIT OR SEED PODS); AND SUITABLE IN MATURE SIZE AND ENVIRONMENTAL REQUIREMENTS FOR THE SITE. TREE SELECTION AND PLACEMENT SHOULD CONSIDER LOCATION AND SIZE OF AREAS TO BE SHADED, LOCATION OF UTILITIES, VIEWS FROM THE STRUCTURE, DISTANCE TO SIDEWALKS AND FOUNDATIONS, OVERHANGS ONTO ADJACENT PROPERTIES AND STREETS; OTHER INFRASTRUCTURE AND ADJACENT TO LANDSCAPING. IN ADDITION, SHADING SHALL NOT CAST A SHADOW, AS SPECIFIED, ON ANY NEIGHBORING SOLAR COLLECTORS PURSUANT TO PUBLIC RESOURCES CODE SECTION 25981, ET SEQ. (SOLAR SHADE CONTROL ACT).
B. USE HIGH ALBEDO MATERIALS WITH AN INITIAL SOLAR REFLECTANCE VALUE OF AT LEAST 0.30 AS DETERMINED IN ACCORDANCE ASTM E1918 OR C1549.
C. USE OPEN GRID PAVEMENT SYSTEM OR PERVIOUS OR PERMEABLE PAVEMENT SYSTEM.
D. LOCATE 50 PERCENT OF PARKING UNDERGROUND OR USE MULTILEVEL PARKING.
E. OTHER METHODS OF REDUCING HEAT ISLAND EFFECTS ACCEPTABLE TO THE COUNTY OF SANTA CLARA.

12. FOR EACH DWELLING UNIT, INSTALL A DEDICATED 208/240-VOLT BRANCH CIRCUIT IN THE RACEWAY REQUIRED BY CALGREEN SECTION 4.106.4.1 (SEE SHEET GB-2 NOTE 4). THE BRANCH CIRCUIT AND ASSOCIATED OVERCURRENT PROTECTIVE DEVICE SHALL BE RATED AT 40 AMPERES MINIMUM. OTHER ELECTRICAL COM-PONENTS, INCLUDING A RECEPTACLE OR BLANK COVER, RELATED TO THIS SECTION SHALL BE INSTALLED IN ACCORDANCE WITH THE CALIFORNIA ELECTRICAL CODE.

THE SERVICE PANEL OR SUB-PANEL CIRCUIT DIRECTORY SHALL IDENTIFY THE OVERCURRENT PROTECTIVE DEVICE DESIGNATED FOR FUTURE EV CHARGING PURPOSES AS "EV READY" IN ACCORDANCE WITH THE CALIFORNIA ELECTRICAL CODE. THE RECEPTACLE OR BLANK COVER SHALL BE IDENTIFIED AS "EV READY."

13. OUTDOOR LIGHTING SYSTEMS SHALL BE DESIGNED AND INSTALLED TO COMPLY WITH THE FOLLOWING:

A. THE MINIMUM REQUIREMENTS IN THE CALIFORNIA ENERGY CODE FOR LIGHTING ZONES 1-4 AS DEFINED IN CHAPTER 10 OF THE CALIFORNIA ADMINISTRATIVE CODE; AND
B. BACKLIGHT, UPLIGHT AND GLARE (BUG) RATINGS AS DEFINED IN IES TM-15-11; AND
C. ALLOWABLE BUG RATINGS NOT EXCEEDING THOSE SHOWN IN CALGREEN TABLE A4.106.10

EXCEPTIONS:

1. LUMINAIRES THAT QUALIFY AS EXCEPTIONS IN THE CALIFORNIA ENERGY CODE.
2. EMERGENCY LIGHTING.
3. ONE- AND TWO-FAMILY DWELLINGS.

14. THE MAXIMUM FLOW RATE OF KITCHEN FAUCETS SHALL NOT EXCEED 1.5 GALLONS PER MINUTE AT 60 PSI. KITCHEN FAUCETS MAY TEMPORARILY INCREASE THE FLOW ABOVE THE MAXIMUM RATE, BUT NOT TO EXCEED 2.2 GALLONS PER MINUTE AT 60 PSI, AND MUST DEFAULT TO A MAXIMUM FLOW RATE OF 1.5 GAL-LONS PER MINUTE AT 60 PSI. WHERE COMPLYING FAUCETS ARE UNAVAILABLE, AERATORS OR OTHER MEANS MAY BE USED TO ACHIEVE REDUCTION.

15. ALTERNATE NONPOTABLE WATER SOURCES SHALL BE USED FOR INDOOR POTABLE WATER REDUCTION. ALTERNATE NONPOTABLE WATER SOURCES SHALL BE INSTALLED IN ACCORDANCE WITH THE CALIFORNIA PLUMBING Code.

16. INSTALL AT LEAST ONE QUALIFIED ENERGY STAR DISHWASHER OR CLOTHES WASHER.

17. NONWATER URINALS OR COMPOSTING TOILETS SHALL BE INSTALLED. WHERE APPROVED, HYBRID URINALS, AS DEFINED IN CALGREEN CHAPTER 2, SHALL BE CONSIDERED NONWATER URINALS.

18. ONE- AND TWO-FAMILY DWELLINGS SHALL BE EQUIPPED WITH A DEMAND HOT WATER RECIRCULATION SYSTEM, AS DEFINED IN CALGREEN CHAPTER 2. THE DEMAND HOT WATER RECIRCULATION SYSTEM SHALL BE INSTALLED IN ACCORDANCE WITH THE CALIFORNIA PLUMBING CODE, CALIFORNIA ENERGY CODE, AND THE MANUFACTURER'S INSTALLATION INSTRUCTIONS.

19. AN APPROVED RAINWATER CATCHMENT SYSTEM SHALL BE DESIGNED AND INSTALLED TO USE RAINWATER GENERATED BY AT LEAST 65 PERCENT OF THE AVAILABLE ROOF AREA. RAINWATER CATCHMENT SYSTEMS SHALL BE DESIGNED AND INSTALLED IN ACCORDANCE WITH THE CALIFORNIA PLUMBING CODE.

20. WHEN LANDSCAPING IS PROVIDED AND AS ALLOWED BY LOCAL ORDINANCE, A WATER EFFICIENT LANDSCAPE IRRIGATION DESIGN THAT ELIMINATES THE USE OF POTABLE WATER BEYOND THE INITIAL REQUIREMENTS FOR PLANT INSTALLATION AND ESTABLISHMENT SHALL BE PROVIDED. METHODS USED TO ACCOM-PLISH THE REQUIREMENTS OF THIS SECTION SHALL COMPLY WITH THE REQUIREMENTS OF THE CALIFORNIA BUILDING STANDARDS CODE AND SHALL INCLUDE, BUT NOT BE LIMITED TO, THE FOLLOWING:

A. USE OF CAPTURED RAINWATER.
B. USE OF RECYCLED WATER.
C. WATER TREATED FOR IRRIGATION PURPOSES AND CONVEYED BY A WATER DISTRICT OR PUBLIC ENTITY.
D. USE OF GRAYWATER.
E. USE OF DROUGHT TOLERANT PLANTS.

21. FOR NEW WATER SERVICE CONNECTIONS, LANDSCAPED IRRIGATED AREAS LESS THAN 5,000 SQUARE FEET SHALL BE PROVIDED WITH SEPARATE SUBMETERS OR METERING DEVICES FOR OUTDOOR POTABLE WATER USE.

22. ALTERNATIVE PLUMBING PIPING SHALL BE INSTALLED TO PERMIT THE DISCHARGE FROM THE CLOTHES WASHER OR OTHER FIXTURES TO BE USED FOR AN IRRIGATION SYSTEM IN COMPLIANCE WITH THE CALIFORNIA PLUMBING CODE.

23. BASED ON PROJECTED AVAILABILITY, DUAL WATER PIPING SHALL BE INSTALLED FOR FUTURE USE OF RECYCLED WATER AT THE FOLLOWING LOCATIONS:

A. INTERIOR PIPING FOR THE USE OF RECYCLED WATER SHALL BE INSTALLED TO SERVE ALL WATER CLOSETS, URINALS AND FLOOR DRAINS.
B. EXTERIOR PIPING IS INSTALLED TO TRANSPORT RECYCLED WATER FROM THE POINT OF CONNECTION TO THE STRUCTURE. RECYCLED WATER SYSTEMS SHALL BE DESIGNED AND INSTALLED IN ACCORDANCE WITH THE CALIFORNIA PLUMBING CODE.

24. RECYCLED WATER SHALL BE USED FOR LANDSCAPE IRRIGATION.

25. AS ALLOWED BY LOCAL CONDITIONS, UTILIZE A FROST-PROTECTED SHALLOW FOUNDATION (FPSF) IN COMPLIANCE WITH THE CALIFORNIA RESIDENTIAL CODE (CRC). WHEN AN FPSF FOUNDATION SYSTEM IS INSTALLED, THE MANUAL REQUIRED BY CALGREEN SECTION 4.410.1 SHALL INCLUDE INSTRUCTIONS TO THE OWNER OR OCCUPANT REGARDING THE NECESSITY FOR HEATING THE STRUCTURE AS REQUIRED IN SECTION R403.3 OF THE CALIFORNIA RESIDENTIAL CODE.

26. AS ALLOWED BY THE COUNTY OF SANTA CLARA, CEMENT USED IN FOUNDATION MIX DESIGN SHALL BE REDUCED NOT LESS THAN 20 PERCENT. RODUCTS COMMONLY USED TO REPLACE CEMENT IN CONCRETE MIX DESIGNS INCLUDE, BUT ARE NOT LIMITED TO:

A. FLY ASH.
B. SLAG.
C. SILICA FUME.
D. RICE HULL ASH.

27. BEAMS, HEADERS AND TRIMMERS SHALL BE SIZED AND INSTALLED AS SPECIFIED IN CHAPTER 23 OF THE CALIFORNIA BUILDING CODE, OR CHAPTER 6 OF THE CALIFORNIA RESIDENTIAL CODE, AS APPLICABLE. OTHER CALCULATIONS ACCEPTABLE TO THE COUNTY OF SANTA CLARA WHICH USE THE MINIMUM SIZE MEMBER FOR THE TRIBUTARY LOAD IS ACCEPTABLE.

28. BUILDING DIMENSIONS AND LAYOUTS SHALL BE DESIGNED TO MINIMIZE WASTE BY ONE OR MORE OF THE FOLLOWING MEASURES IN AT LEAST 80 PERCENT OF THE STRUCTURE:

A. BUILDING DESIGN DIMENSIONS IN 2-FOOT INCREMENTS ARE USED.
B. WINDOWS AND DOORS ARE LOCATED AT REGULAR 16" OR 24" STUD POSITIONS.
C. OTHER METHODS ACCEPTABLE TO THE COUNTY OF SANTA CLARA.

29. PREMANUFACTURED BUILDING SYSTEMS SHALL BE USED TO ELIMINATE SOLID SAWN LUMBER WHENEVER POSSIBLE. ONE OR MORE OF THE FOLLOWING PREMANUFACTURED BUILDING SYSTEMS IS USED:

A. COMPOSITE FLOOR JOIST OR PREMANUFACTURED FLOOR FRAMING SYSTEM.
B. COMPOSITE ROOF RAFTERS OR PREMANUFACTURED ROOF FRAMING SYSTEM.
C. PANELIZED (SIPS, ICF OR SIMILAR) FRAMING SYSTEMS.
D. OTHER METHODS APPROVED BY THE COUNTY OF SANTA CLARA.

30. MATERIAL LISTS SHALL BE INCLUDED IN THE PLANS WHICH SPECIFY THE MATERIAL QUANTITY AND PROVIDE DIRECTION FOR ON-SITE CUTS TO BE MADE FROM THE MATERIAL PROVIDED. MATERIAL LISTS AND DIRECTION SHALL BE PROVIDED FOR THE FOLLOWING SYSTEMS:

A. FLOOR FRAMING.
B. WALL FRAMING.
C. CEILING AND ROOF FRAMING.
D. STRUCTURAL PANELS AND ROOF SHEATHING.

31. UTILIZE PREFINISHED BUILDING MATERIALS WHICH DO NOT REQUIRE ADDITIONAL PAINTING OR STAINING WHEN POSSIBLE. ONE OR MORE OF THE FOLLOWING BUILDING MATERIALS THAT DO NOT REQUIRE ADDITIONAL RESOURCES FOR FINISHING ARE USED:

A. EXTERIOR TRIM NOT REQUIRING PAINT OR STAIN.
B. WINDOWS NOT REQUIRING PAINT OR STAIN.
C. SIDING OR EXTERIOR WALL COVERINGS WHICH DO NOT REQUIRE PAINT OR STAIN.

32. CONCRETE FLOORS THAT DO NOT REQUIRE ADDITIONAL COVERINGS SHALL BE USED INCLUDING BUT NOT LIMITED TO STAINED, NATURAL OR STAMPED CONCRETE FLOORS.

33. USE MATERIALS, EQUIVALENT IN PERFORMANCE TO VIRGIN MATERIALS WITH A TOTAL (COMBINED) RECYCLED CONTENT VALUE (RCV) OF NOT BE LESS THAN 10 PERCENT OF THE TOTAL MATERIAL COST OF THE PROJECT.

REQUIRED TOTAL RCV (DOLLARS) = TOTAL MATERIAL COST(DOLLARS) × 10 PERCENT

FOR THE PURPOSES OF THIS SECTION, MATERIALS USED AS COMPONENTS OF THE STRUCTURAL FRAME SHALL NOT BE USED TO CALCULATE RECYCLED CONTENT. THE STRUCTURAL FRAME INCLUDES THE LOAD BEARING STRUCTURAL ELEMENTS, SUCH AS WALL STUDS, PLATES,SILLS, COLUMNS, BEAMS, GIRDERS, JOISTS, RAFTERS AND TRUSSES. SAMPLE FORMS WHICH ALLOW USER INPUT, LOCATED AT SHEET CG-4, MAY BE USED TO SIMPLIFY DOCUMENTING COMPLIANCE WITH THIS SECTION AND FOR CALCULATING RECYCLED CONTENT VALUE OF MATERIALS OR ASSEMBLY PRODUCTS.

SOURCES AND RECYCLED CONTENT OF SOME RECYCLED MATERIALS CAN BE OBTAINED FROM CALRECYCLE IF NOT PROVIDED BY THE MANUFACTURER.

FOR FURTHER INSTRUCTION SEE CALGREEN A4.405.3.

34. ONE OR MORE OF THE FOLLOWING MATERIALS MANUFACTURED FROM RAPIDLY RENEWABLE SOURCES OR AGRICULTURAL BY-PRODUCTS SHALL BE USED:

A. INSULATION.
B. BAMBOO OR CORK.
C. ENGINEERED PRODUCTS.
D. AGRICULTURAL BASED PRODUCTS.
E. OTHER PRODUCTS ACCEPTABLE TO THE ENFORCING AGENCY.

THE INTENT OF THIS SECTION IS TO UTILIZE BUILDING MATERIALS AND PRODUCTS WHICH ARE TYPICALLY HARVESTED WITHIN A 10-YEAR OR SHORTER CYCLE.

35. INSTALL FOUNDATION AND LANDSCAPE DRAINS WHICH DISCHARGE TO A DRY WELL, SUMP, BIOSWALE OR OTHER APPROVED ON-SITE LOCATION.

36. INSTALL GUTTER AND DOWNSPOUT SYSTEMS TO ROUTE WATER AT LEAST 5 FEET AWAY FROM THE FOUNDATION OR CONNECT TO LANDSCAPE DRAINS WHICH DISCHARGE TO A DRY WELL, SUMP, BIOSWALE, RAINWATER CAPTURE SYSTEM OR OTHER APPROVED ON-SITE LOCATION.

37. PROVIDE FLASHING DETAILS ON THE BUILDING PLANS WHICH COMPLY WITH ACCEPTED INDUSTRY STANDARDS OR MANUFACTURER'S INSTRUCTIONS. DETAILS SHALL BE SHOWN ON HOUSE PLANS AT ALL OF THE FOLLOWING LOCATIONS:

A. AROUND WINDOWS AND DOORS.
B. ROOF VALLEYS.
C. DECK CONNECTIONS TO THE STRUCTURE.
D. ROOF-TO-WALL INTERSECTIONS.
E. CHIMNEYS TO ROOF INTERSECTIONS.
F. DRIP CAPS ABOVE WINDOWS AND DOORS WITH ARCHITECTURAL PROJECTIONS.

38. PROTECT BUILDING MATERIALS DELIVERED TO THE CONSTRUCTION SITE FROM RAIN AND OTHER SOURCES OF MOISTURE.

39. EXTERIOR DOORS TO THE DWELLING SHALL BE COVERED TO PREVENT WATER INTRUSION BY ONE OR MORE OF THE FOLLOWING:

A. AN AWNING AT LEAST 4 FEET IN DEPTH IS INSTALLED.
B. THE DOOR IS PROTECTED BY A ROOF OVERHANG AT LEAST 4 FEET IN DEPTH.
C. THE DOOR IS RECESSED AT LEAST 4 FEET.
D. OTHER METHODS WHICH PROVIDE EQUIVALENT PROTECTION.

40. A PERMANENT OVERHANG OR AWNING AT LEAST 2 FEET IN DEPTH SHALL BE PROVIDED AT ALL EXTERIOR WALLS.

41. NON-HAZARDOUS CONSTRUCTION AND DEMOLITION DEBRIS GENERATED AT THE SITE SHALL BE DIVERTED TO RECYCLE OR SALVAGE IN COMPLIANCE WITH THE FOLLOWING:

AT LEAST A 65 PERCENT REDUCTION. ANY MIXED RECYCLABLES THAT ARE SENT TO MIXED-WASTE RECYCLING FACILITIES SHALL INCLUDE A QUALIFIED THIRD PARTY VERIFIED FACILITY AVERAGE DIVERSION RATE. VERIFICATION OF DIVERSION RATES SHALL MEET MINIMUM CERTIFICATION ELIGIBILITY GUIDELINES, ACCEPTABLE TO THE COUNTY OF SANTA CLARA.

DOCUMENTATION SHALL BE PROVIDED TO THE COUNTY OF SANTA CLARA WHICH DEMONSTRATES COMPLIANCE WITH THIS SECTION. DOCUMENTATION SHALL BE IN COMPLIANCE WITH CALGREEN SECTION 4.408.5.

42. USE COMPOSITE WOOD PRODUCTS MADE WITH EITHER CALIFORNIA AIR RESOURCES BOARD APPROVED NO-ADDED FORMALDEHYDE (NAF) RESINS OR ULTRA-LOW EMITTING FORMALDEHYDE (ULEF) RESINS.

DOCUMENTATION MUST BE PROVIDED THAT VERIFIES THAT FINISH MATERIALS ARE CERTIFIED TO MEET THE POLLUTANT EMISSION LIMITS.

43. AT LEAST 90 PERCENT OF THE TOTAL AREA OF RESILIENT FLOORING SYSTEMS INSTALLED IN THE BUILDING SHALL COMPLY WITH THE VOC-EMISSION LIMITS DEFINED IN AT LEAST ONE OF THE FOLLOWING:

A. PRODUCTS COMPLIANT WITH THE CALIFORNIA DEPARTMENT OF PUBLIC HEALTH, "STANDARD METHOD FOR THE TESTING AND EVALUATION OF VOLATILE ORGANIC CHEMICAL EMISSIONS FROM INDOOR SOURCES USING ENVIRONMENTAL CHAMBERS,"VERSION 1.1, FEBRUARY 2010 (ALSO KNOWN AS SPECIFICATION 01350), CERTIFIED AS A CHPS LOW-EMITTING MATERIAL IN THE COLLABORATIVE FOR HIGH PERFORMANCE SCHOOLS (CHPS) HIGH PERFORMANCE PRODUCTS DATABASE.
B. PRODUCTS CERTIFIED UL GREENGUARD GOLD (FORMERLY THE GREENGUARD CHILDREN & SCHOOLS PROGRAM.)
C. CERTIFICATION UNDER THE RESILIENT FLOOR COVERING INSTITUTE (RFCI) FLOORSCORE PROGRAM.
D. MEET THE CALIFORNIA DEPARTMENT OF PUBLIC HEALTH,"STANDARD METHOD FOR THE TESTING AND EVALUATION OF VOLATILE ORGANIC CHEMICAL EMISSIONS FROM INDOOR SOURCES USING ENVIRONMENTAL CHAMBERS," VERSION 1.1,FEBRUARY 2010 (ALSO KNOWN AS SPECIFICATION 01350.)

DOCUMENTATION MUST BE PROVIDED THAT VERIFIES THAT FINISH MATERIALS ARE CERTIFIED TO MEET THE POLLUTANT EMISSION LIMITS IN THIS SECTION.

44. INSTALL THERMAL INSULATION IN COMPLIANCE WITH THE CALIFORNIA DEPARTMENT OF PUBLIC HEALTH, "STANDARD METHOD FOR THE TESTING AND EVALUATION OF VOLATILE ORGANIC CHEMICAL EMISSIONS FROM INDOOR SOURCES USING ENVIRONMENTAL CHAMBERS," VERSION 1.1, FEBRUARY 2010 (ALSO KNOWN AS SPECIFICATION 01350), CERTIFIED AS A CHPS LOW-EMITTING MATERIAL IN THE COLLABORATIVE FOR HIGH PERFORMANCE SCHOOLS (CHPS) HIGH PERFORMANCE PRODUCTS DATABASE; PRODUCTS CERTIFIED UNDER THE UL GREENGUARD GOLD (FORMERLY GREENGUARD CHILDREN & SCHOOLS PROGRAM); OR MEET CALIFORNIA DEPARTMENT OF PUBLIC HEALTH, "STANDARD METHOD FOR THE TESTING AND EVALUATION OF VOLATILE ORGANIC CHEMICAL EMISSIONS FROM INDOOR SOURCES USING ENVIRONMENTAL CHAMBERS," VERSION 1.1, FEBRUARY 2010 (ALSO KNOWN AS SPECIFICATION 01350).

DOCUMENTATION MUST BE PROVIDED THAT VERIFIES THE MATERIALS ARE CERTIFIED TO MEET THE POLLUTANT EMISSION LIMITS IN THIS SECTION.

45. PROVIDE FILTERS ON RETURN AIR OPENINGS RATED AT MERV 8 OR HIGHER DURING CONSTRUCTION.

46. DIRECT-VENT HEATING AND COOLING EQUIPMENT SHALL BE UTILIZED IF THE EQUIPMENT WILL BE LOCATED IN THE CONDITIONED SPACE OR INSTALL THE SPACE HEATING AND WATER HEATING EQUIPMENT IN AN ISOLATED MECHANICAL ROOM.

Project Information

CALGreen One or Two Family Residential Project Mandatory and Tier1 Requirements
County of Santa Clara

CG-4
03/30/2020

REGISTERED PROFESSIONAL ENGINEER
JYH-RONG YANG
No. C 48655
Exp. 06/30/22
CIVIL
STATE OF CALIFORNIA

Jerry Yang, P.E.; G.E.

REVISION TABLE			
NUMBER	DATE	REVISED BY	DESCRIPTION
1	06.22.22	EDS	REVISION 1

ELITE DESIGN STUDIO

PHAM RESIDENCE
16190 WOOD ACRES RD
LOS GATOS CA 95030

CAL GREEN CHECKLIST

DATE: 7/11/22

SCALE: NO SCALE

SHEET: CGC

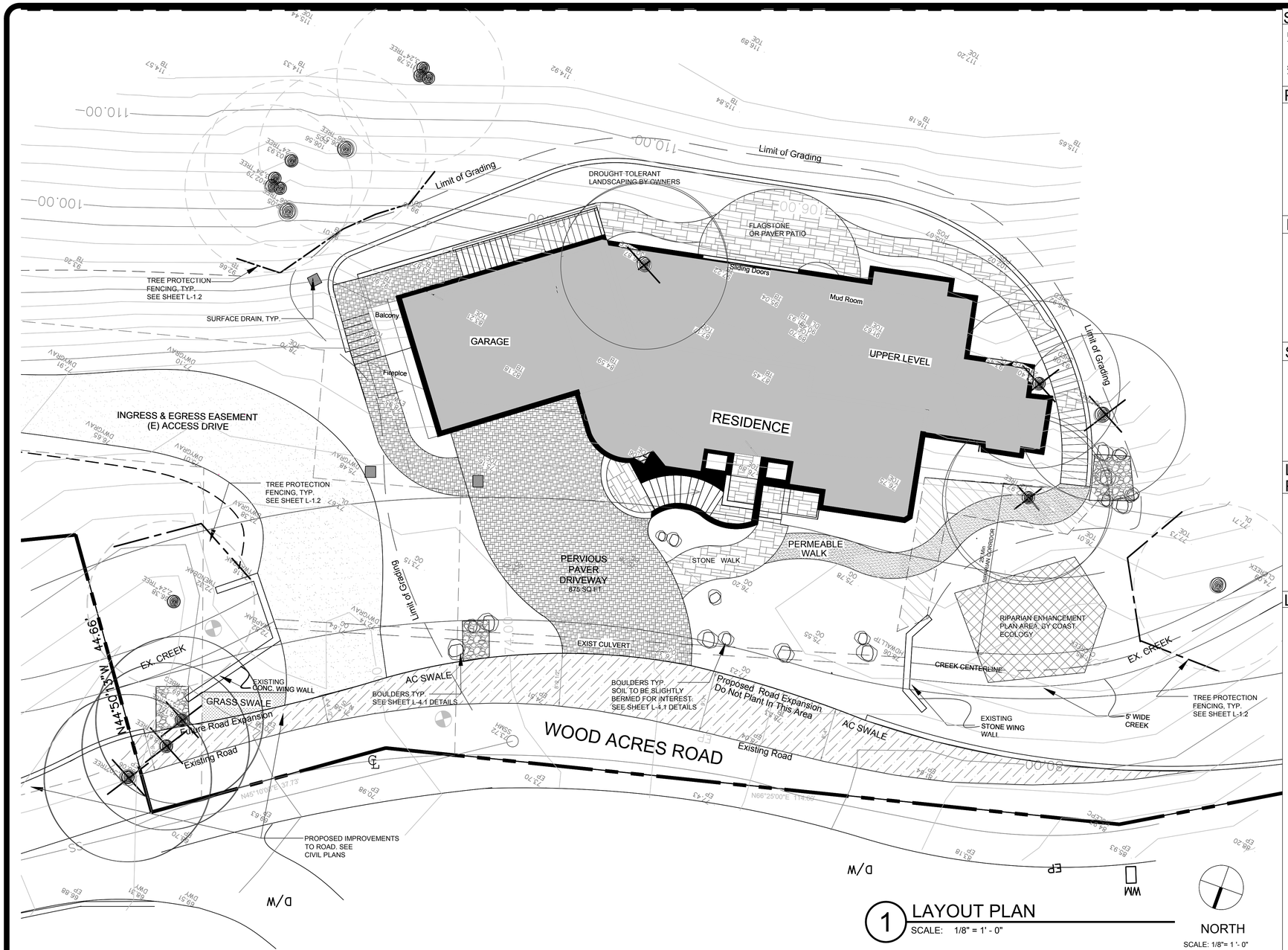

1 LAYOUT PLAN
SCALE: 1/8" = 1' - 0"

NORTH
SCALE: 1/8"= 1 '- 0"

SYMBOLS AND ABBREVIATIONS LEGEND

- 12" - 30" BOULDERS- GRANITE OR FIELD STONE
- EXISTING TREE TO REMAIN
- EXISTING TREE TO BE REMOVED
- TREE PROTECTION ZONE (TPZ) See Tree Plan for more Details
- LIMIT OF GRADING
- EASEMENT
- EXISTING CULVERT
- RIPARIAN CORRIDOR AREA
- RIPARIAN ENHANCEMENT AREA (Plan By Coast Ecology)
- E — ELECTRICAL OUTLET
- G — GAS
- HB — HOSE BIB
- CUT STONE PAVING - ASHLAR PATTERN PENNSYLVANIA BLUESTONE (OR SIMILAR)
- PERVIOUS PAVERS CALSTONE QUARRYSTONE - CHACO CANYON (OR SIMILAR)
- PERMEABLE PATH (CRUSHED GRAVEL OR SIMILAR)
- COBBLES AT DRAINAGE DISSIPATOR
- ℄ — CENTERLINE
- WM — WATER METER
- typ. — TYPICAL (UNLESS OTHERWISE SPECIFIED)

Drake Design Associates, LLC grants Client Lucas Nguyen and Margaret Pham a nonexclusive license to use Drake Design Associates' documents as provided in the Landscape Architecture Plans for the Improvements at 16190 Wood Acres Road, Los Gatos, CA. No other permission is implied or granted. All instruments of professional service prepared by Drake Design Associates., including but not limited to, drawings and specifications, are the property of Drake Design Associates, LLC. These documents shall not be reused on other projects or by other professionals without written permission. Drake Design Associates LLC retains all rights in its documents.

STATEMENTS OF COMPLIANCE

DESIGNER STATEMENT
THIS PLAN COMPLIES WITH THE CRITERIA OF THE WATER EFFICIENT LANDSCAPING ORDINANCE AND APPLIES THEM ACCORDINGLY FOR THE EFFICIENT USE OF WATER IN THIS IRRIGATION DESIGN PLAN.

SIGNED BY:
TITLE: LANDSCAPE ARCHITECT, LIC # 6081 DATE: APRIL 12, 2022

PROJECT INFORMATION

PROPERTY OWNERS: LUCAS NGUYEN AND MARGARET PHAM
ELITE REALTY, 2787 MOORPARK AVE, SAN JOSE, CA 95128
PHONE: 408.625.1500

PROJECT TYPE: NEW RESIDENCE BY OWNER FILE NUMBER: 4167-15G

TOTAL LANDSCAPED AREA: 5,402 sq ft

100% DRIP IRRIGATION

100% CLIMATE ADAPTED DROUGHT TOLERANT PLANTS

0% TURF

MUNICIPAL WATER SUPPLY BY SANTA CLARA VALLEY WATER DISTRICT

LANDSCAPE PACKAGE CHECKLIST:

- [x] 1. PROJECT INFORMATION (SHEET L-1.1)
- [x] 2. WATER EFFICIENT LANDSCAPE WORKSHEETS & HYDROZONE INFORMATION (SHEET L-3.1)
- [ ] 3. SOIL MANAGEMENT REPORT (TO BE PROVIDED BEFORE INSTALLATION, IF NECESSARY)
- [x] 4. LANDSCAPE DESIGN PLAN (SHEETS L-1.1, L-1.2, L-2.1, L-2.2)
- [x] 5. IRRIGATION DESIGN PLAN (SHEETS L-3.1, L-3.2)
- [ ] 6. GRADING DESIGN PLAN- SEE CIVIL PLANS
- [x] 7. RIPARIAN HABITAT ENHANCEMENT PLAN (By Coast Ecology)
- [x] 6. NESTING RAPTOR & BAT REPORT (By Coastal Ecology)

SHEET INDEX

L-1.1	LANDSCAPE MATERIALS LAYOUT PLAN, AND DOCUMENTATION PACKAGE COVER
L-1.2	TREE REMOVAL, REPLACEMENT & PROTECTION PLAN, SCREENING PLAN
L-2.1	PLANTING PLAN
L-2.2	LANDSCAPE DETAILS
L-3.1	IRRIGATION PLAN, HYDROZONES AND WATER BUDGET WORKSHEET
L-3.2	IRRIGATION DETAILS
L-4.1	RIPARIAN HABITAT ENHANCEMENT PLAN, BY COAST ECOLOGY
L-4.2	RIPARIAN HABITAT ENHANCEMENT PLAN, BY COAST ECOLOGY
L-4.3	RIPARIAN HABITAT ENHANCEMENT PLAN, BY COAST ECOLOGY
L-4.4	NESTING RAPTOR AND BAT REPORT, BY COAST ECOLOGY

LANDSCAPE SUBMITTALS REQUIRED PRIOR TO FINAL INSPECTION:

- [ ] 1. PRIOR TO FINAL INSPECTION, THE WELO CERTIFICATE OF COMPLETION SHALL BE SUBMITTED TO THE PLANNING DIVISION AS REQUIRED IN SECTION 153.160.140
- [ ] 2. AS BUILT/ RECORD DRAWINGS
- [ ] 3. LANDSCAPE AND IRRIGATION MAINTENANCE SCHEDULE
- [ ] 4. 3RD PARTY IRRIGATION AUDIT REPORT
- [ ] 5. SOIL AMENDMENT VERIFICATION
- [ ] 6. INSTALLATION CERTIFICATION

LANDSCAPE LAYOUT PLAN NOTES

1. SEE CIVIL ENGINEER'S GRADING PLAN INCLUDED IN BUILDING PERMIT SUBMITTAL SET FOR LANDSCAPE GRADING AND DRAINAGE.
2. CONTRACTOR SHALL COORDINATE ALL WORK WITH OTHER TRADES PRIOR TO INSTALLATION.
3. TREES TO BE REMOVED WITHIN THE LIMITS OF GRADING SHALL BE REPLACED PER THE COUNTY OF SANTA CLARA'S CONDITIONS OF APPROVAL, AS LISTED ON THE SHEET L-1.2.
4. SEE TREE PROTECTION AND MAINTENANCE SPECIFICATIONS, THIS SHEET, FOR PROTECTION MEASURES FOR TREES TO REMAIN,
5. ALL LAYOUT WORK SHALL BE APPROVED BY THE PROJECT MANAGER PRIOR TO THE START OF ANY EXCAVATION.
6. ALL ADJUSTMENTS OF THE LAYOUT SHALL BE APPROVED BY THE PROJECT MANAGER AND LANDSCAPE ARCHITECT PRIOR TO CONSTRUCTION.
7. ALL TRANSITIONS OF WALKS AND CURBS SHALL BE CONSTRUCTED TO A SMOOTH SURFACE.
9. THE CONTRACTOR SHALL CONSTRUCT ALL CONCRETE WORK USING FORM LUMBER AND STAKES STRONG ENOUGH AND AT INTERVALS TO ENSURE A SMOOTH CURVE WHERE CURVES ARE DRAWN. ALL FORM WORK MUST BE APPROVED BY THE PROJECT MANAGEMENT TEAM PRIOR TO POURING OF ANY CONCRETE
10. IN AREAS WHERE NEW CONCRETE IS JOINED WITH EXISTING CONCRETE, THE CONNECTION SHALL BE MADE AT THE NEAREST SCORE LINE OR EXPANSION JOINT.
11. ALL EXTERIOR LANDSCAPE LIGHTING SHALL BE LOW VOLTAGE AND PLACED SO LUMENS DO NOT SHINE UPWARDS INTO NOR IN A WAY THAT WOULD DISRUPT THE NATURAL HABITAT. SEE LIGHTING FIXTURES AND SPECIFICATIONS SHEET.
12. FINISH GRADE SHALL BE 3.5" BELOW TOP OF PAVING AND 9.5" BELOW TOP OF FOUNDATION TO ALLOW FOR 3" MULCH.
13. A MINIMUM OF 3" ORGANIC RECYCLED BARK SOIL STABILIZING MULCH SHALL BE APPLIED ON ALL EXPOSED SOIL SURFACES OF PLANTING AREAS. LEAVE 1" AROUND TREE TRUNKS CLEAR OF MULCH.
14. REFER TO SHEET L-2 FOR ALL SOIL PREPARATION AND PLANTING DETAILS.
15. HARDSCAPE MATERIALS SUCH AS PAVERS, TILES AND COLORS, PATTERNS, SHALL BE CHOSEN OR APPROVED BY PROJECT LANDSCAPE ARCHITECT OR OWNER.
16. PLACEMENT OF BOULDERS SHALL BE APPROVED BY PROJECT LANDSCAPE ARCHITECT OR OWNER.
17. CONTRACTOR SHALL COMPLY WITH 2016 CALIFORNA BUILDING, MECHANICAL, ELECTRICAL, PLUMBING AND FIRE CODES AND 2016 CALIFORNIA ENERGY CODES.

GRADING AND DRAINAGE NOTES

1. SEE CIVIL ENGINEER PLANS FOR SITE DRAINAGE PLANS.
2. LANDSCAPE CONTRACTOR SHALL BE RESPONSIBLE FOR THE FINAL GRADING AND PROPER SURFACE DRAINAGE IN ALL LANDSCAPED AREAS.
3. LANDSCAPE CONTRACTOR SHALL VERIFY THE LOCATION OF ALL UTILITIES AND PROTECT AT ALL TIMES. TELEPHONE U.S. ALERT TO LOCATE ANY UTILITIES IN DOUBT.
4. PROTECT ALL EXISTING TREES AND SHRUBS TO REMAIN DURING GRADING AND DRAINAGE OPERATIONS.
5. CONTRACTOR SHALL TRY TO ACHIEVE A MINIMUM OF 2% SLOPE IN ALL SOFTSCAPE AREAS AND GUARANTEE POSITIVE DRAINAGE IN ALL AREAS UNDER CONTRACT.
6. FINISH GRADES SHALL BE 6" BELOW TOP OF FOUNDATIONS AT ALL TIMES. PITCH PER UNIFORM BUILDING CODES.
7. ALL AREA DRAINS AND CATCH BASINS ARE TO BE FREE FROM OBSTRUCTIONS AND MAINTAINED OPEN AND FREE RUNNING DURING AND AT COMPLETION OF WORK.

DRAKE DESIGN ASSOCIATES, LLC
LANDSCAPE ARCHITECTURE STUDIO, RLA #6081
51 UNIVERSITY AVENUE, SUITE I, LOS GATOS, CA. 95030
WWW.DRAKEDESIGNASSOC.COM
408.688.7651

NEW RESIDENCE FOR:
NGUYEN RESIDENCE
16190 Wood Acres Road
Los Gatos, CA

LANDSCAPE PLAN

DRAWN	LD
CHECKED	LD
DATE	4/12/2022
SCALE	1/8" = 1'-0"
REV	PLANNING 12/13/2021
SHEET	L- 1.1
OF	– SHEETS

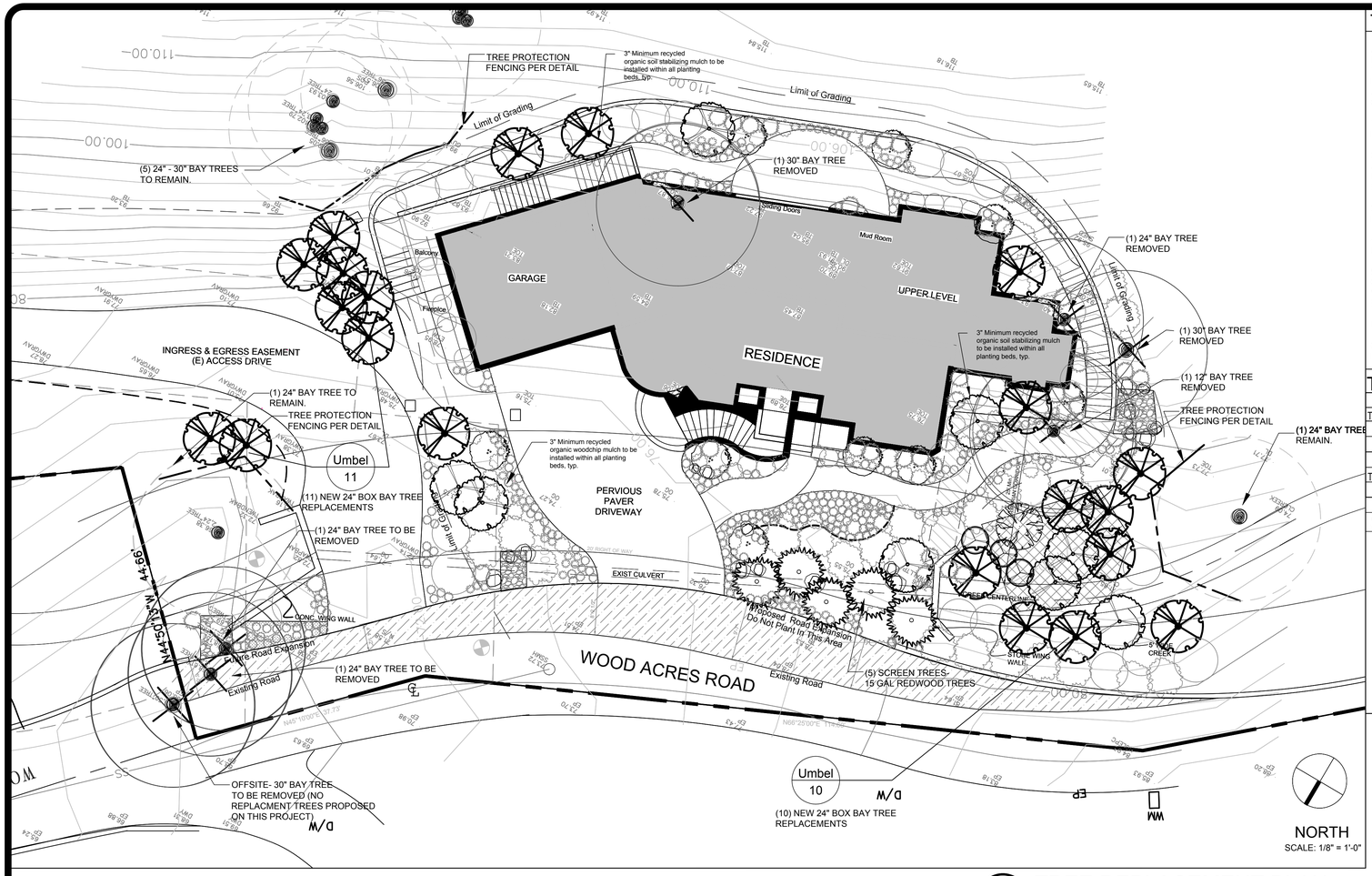

1 TREE REPLACEMENT PLAN

SCALE: 1" = 10' - 0"

TREE PROTECTION NOTES

1) FENCING:
ALL TREES TO BE RETAINED SHALL BE PROTECTED WITH CHAIN LINK FENCING OR OTHER RIGID FENCE ENCLOSURE ACCEPTABLE BY THE PLANNING OFFICE. FENCED ENCLOSURES FOR TREES TO BE PROTECTED SHALL BE ERECTED AT THE DRIPLINE OF TREES OR AS ESTABLISHED BY THE ARBORIST TO ESTABLISH THE TREE PROTECTIVE ZONE (TPZ) IN WHICH NO SOIL DISTURBANCE IS PERMITTED AND ACTIVITIES ARE RESTRICTED.
ALL TREES TO BE PRESERVED SHALL BE PROTECTED WITH MINIMUM 5-FOOT HIGH FENCES. FENCES ARE TO BE MOUNTED ON 2-INCH DIAMETER GALVANIZED IRON POSTS, DRIVEN INTO THE GROUND TO A DEPTH OF AT LEAST 2 FEET, AT NO MORE THAN 10-FOOT SPACING (SEE DETAIL).

TREE FENCING SHALL BE ERECTED BEFORE ANY DEMOLITION, GRADING OR CONSTRUCTION BEGINS AND REMAIN IN PLACE UNTIL THE FINAL INSPECTION.

2) "WARNING" SIGNS
A WARNING SIGN SHALL BE PROMINENTLY DISPLAYED ON EACH TREE PROTECTIVE FENCE PER THE REQUIREMENTS OF DEVELOPMENT PURSUANT TO THE SANTA CLARA COUNTY PLANNING OFFICE. (SEE ATTACHED EXAMPLE). THE SIGNS ARE AVAILABLE AT THE PLANNING AND BUILDING INSPECTION OFFICES OR AT WWW.SCCPLANNING.ORG.

3) IRRIGATION PROGRAM
IRRIGATE TO WET THE SOIL WITHIN THE TPZ DURING THE DRY SEASON IF NECESSARY.

4) DUST CONTROL PROGRAM
DURING PERIODS OF EXTENDED DROUGHT, OR GRADING, SPRAY TRUNK, LIMBS AND FOLIAGE TO REMOVE ACCUMULATED CONSTRUCTION DUST.

5) SOIL COMPACTION DAMAGE/ MULCHING
COMPACTION OF THE SOIL CAUSES A SIGNIFICANT IMPACT TO TREES DURING CONSTRUCTION. IF COMPACTION TO THE UPPER 12-INCH SOIL WITHIN THE TPZ HAS OCCURRED OR IS PROPOSED, THEN THE FOLLOWING MITIGATION MEASURES SHALL BE IMPLEMENTED AS RECOMMENDED BY THE PROJECT LANDSCAPE ARCHITECT:
* FOUR-INCHES OF CHIP BARK MULCHING SHALL BE PLACED ON TOP OF THE TPZ AND ENCLOSED WITH THE TREE PROTECTIVE FENCING AS PRESCRIBED IN THE COUNTY PROTECTIVE FENCING MEASURES.

6) TREE MAINTENANCE
EXISTING TREES TO REMAIN SHALL BE MAINTAINED TO PRESERVE HEALTH AND PRUNED BY A LICENSED ARBORIST.

TREE REMOVAL AND REPLACEMENT LEGEND

SYM	BOTANICAL NAME	COMMON NAME	QTY	SIZE	REPLACEMENT RATIOS	REPLACEMENT TREES
TREES TO BE REMOVED						
	UMBELLULARIA californica	California Bay Tree	1	12" AT DBH	(2) 24-inch box trees	2
	UMBELLULARIA californica	California Bay Tree	3	24" AT DBH	(3) 24-inch box trees	9
	UMBELLULARIA californica	California Bay Tree	2	30" AT DBH	(4) 24-inch box trees	8
TOTAL REPLACEMENT TREES						
Umbel	UMBELLULARIA californica	California Bay Tree	21	24" Box	See Planting Plan Sheet L-2.1	

REFER TO PLANTING AND IRRIGATION PLANS FOR PLANTING AND IRRIGATION SPECIFICATIONS AND INFORMATION

SYMBOLS LEGEND

REPLACEMENT TREES:
Umbellularia californica - California Bay Laurel, 24" Box

SCREEN TREES:
Sequoia sempervirens- Coast Redwood, 15 gal

TREE PROTECTION ZONE (TPZ)
See Tree Plan for more Details

EXISTING BAY TREE TO REMAIN

EXISTING BAY TREE TO BE REMOVED

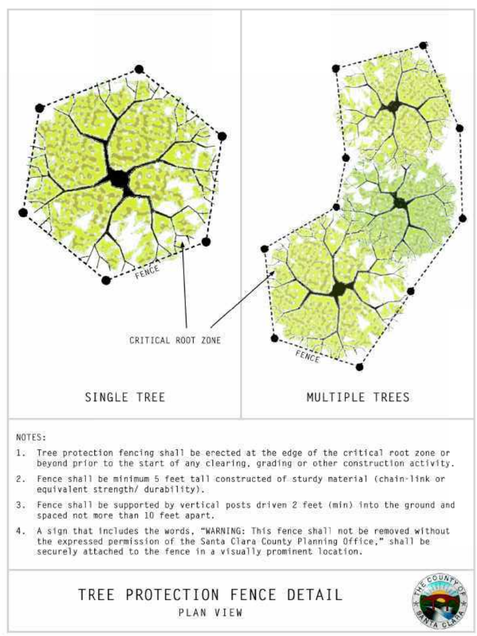

2 TREE PROTECTION DETAILS

SCALE: NTS

WARNING

This fencing shall not be removed without permission from the Santa Clara County Planning Office: (408) 299-5770

REMOVAL WITHOUT PERMISSION MAY BE SUBJECT TO FINES

Santa Clara County Ordinance Code Chapter C16

County of Santa Clara tree protection measures may be found at: http://www.sccplanning.gov

4 WARNING SIGN DETAIL

SCALE: NTS

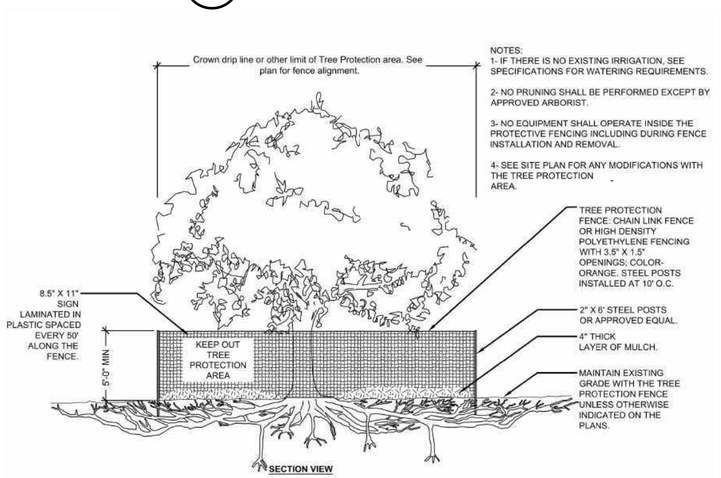

3 PROTECTION FENCING

SCALE: 1/4" = 1' - 0"

Drake Design Associates, LLC grants Client a nonexclusive license to use Drake Design Associates' documents as provided in the Landscape Architecture Plans for the Improvements at 16190 Wood Acres Road, Los Gatos, CA. No other license is implied or granted. All instruments of professional service prepared by Drake Design Associates., including but not limited to, drawings and specifications, are the property of Drake Design Associates, LLC. These documents shall not be reused on other projects without written permission. Drake Design Associates LLC retains all rights in its documents.

DRAKE DESIGN ASSOCIATES, LLC
LANDSCAPE ARCHITECTURE STUDIO, RLA #6081
51 UNIVERSITY AVENUE, SUITE I, LOS GATOS, CA. 95030
WWW.DRAKEDESIGNASSOC.COM
408.688.7651

NEW RESIDENCE FOR:
NGUYEN RESIDENCE
16190 Wood Acres Road
Los Gatos, CA

TREE REPLACEMENT & PROTECTION PLAN

DRAWN	LD
CHECKED	LD
DATE	4/30/2019
SCALE	1" = 10' - 0"
REV	
SHEET	L- 1.2
OF	- SHEETS

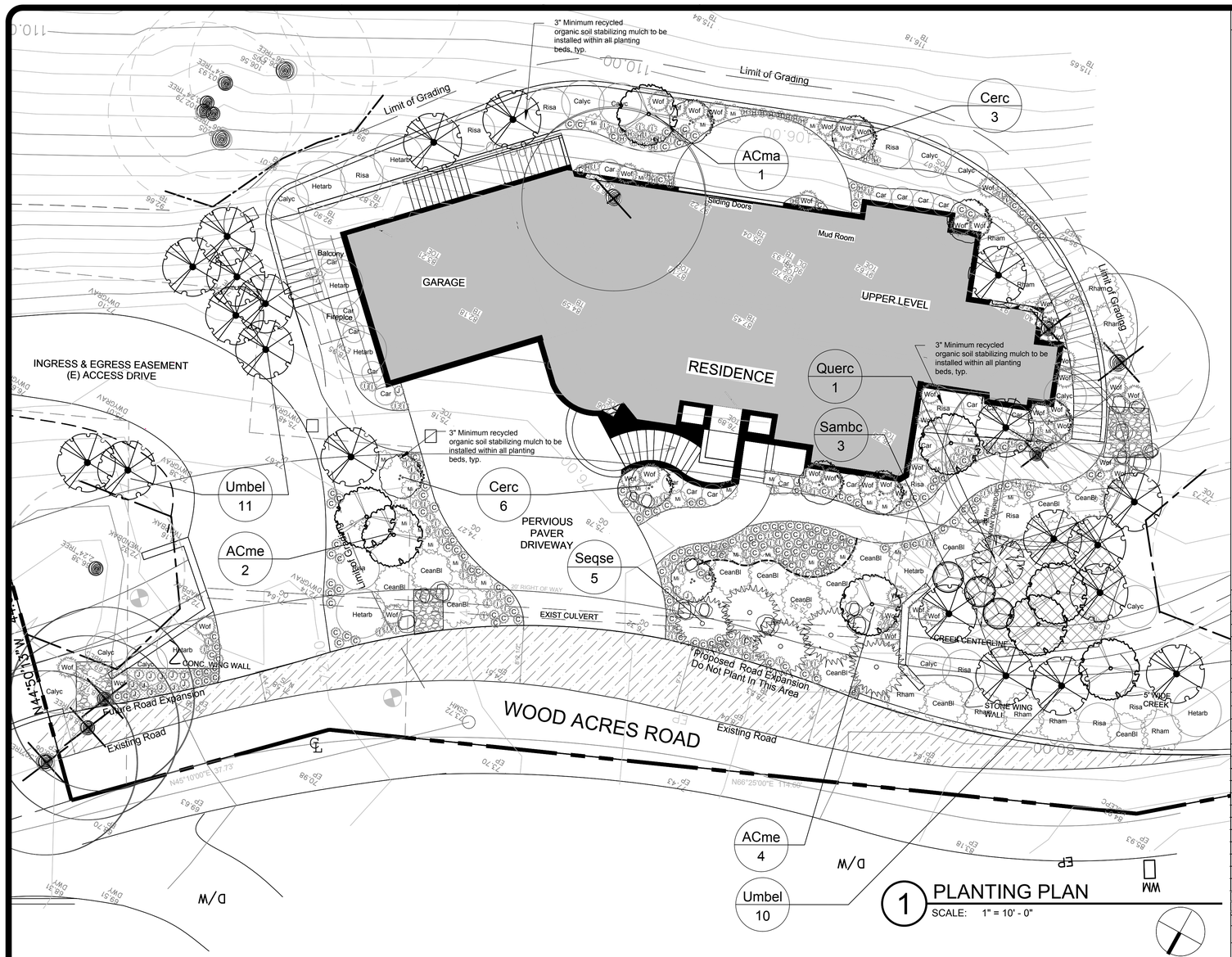

1 PLANTING PLAN

SCALE: 1" = 10' - 0"

NORTH

SCALE: 1/8" = 1'-0"

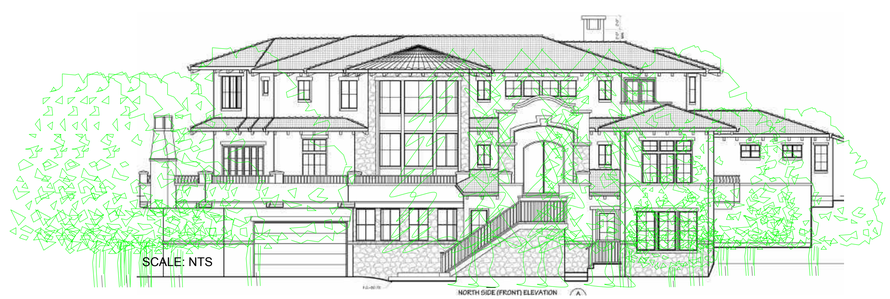

SCALE: NTS

2 TREE SCREENING OUTLINE

SCALE: NTS

PLANTING NOTES & DESIGN STANDARDS

1. REFER TO CIVIL ENGINEER'S GRADING PLAN INCLUDED IN BUILDING PERMIT SUBMITTAL SET FOR LANDSCAPE GRADING AND DRAINAGE.
2. THIS PLANTING DESIGN IS DESIGNED TO ACHIEVE MAXIMUM WATER EFFICIENCY BY USING A SELECTION OF WATER CONSERVING, NATIVE PLANT SPECIES, WITH AN UNDERSTANDING OF THE HORTICULTURAL ATTRIBUTES, SOIL AND CLIMATE CONDITIONS NEEDS, AND LOCAL AVAILABILITY OF PLANTS.
3. TREES AND PLANTS ARE SELECTED BASED ON LOS GATOS HILLSIDE AREA STANDARDS AND GUIDELINES, AND PLACED AS PRESCRIBED IN HILLSIDE AREA LANDSCAPE ZONES, AND SIZED APPROPRIATELY FOR THE PLANTING AREAS.
4. THIS LANDSCAPE PLAN HAS BEEN DESIGNED FOR FIRE SAFETY AND INCLUDES FIRE DEFENSIBLE SPACE.
5. PLANTS HAVE BEEN SELECTED FOR EROSION CONTROL, INDIGENOUS NATIVE HABITAT, AND FIRE SAFETY, AS WELL AS AESTHETICS.
6. THE CONTRACTOR SHALL AMEND SOIL TO A DEPTH OF 6" WITH THE FOLLOWING AMENDMENTS PER 1,000 S.F.: SIX (6) C.Y. OF ORGANIC LANDSCAPE MIX, INCLUDING ORGANIC COMPOST.
7. CONTRACTOR SHALL INCLUDE APPLICATIONS OF ADDITIONAL AMMENDMENTS PER A SOILS MANAGEMENT REPORT, IF NEEDED.
8. AFTER AMENDING SOIL TO A DEPTH OF 6", GRADE ALL AREAS SMOOTH WITH NO LOCALIZED DEPRESSION EXCEEDING ½". ALL AREAS SHALL SURFACE DRAIN WITH 2% MIN. SLOPE AWAY FROM BUILDING, PAVING, OR OTHER STRUCTURES.
9. CONTRACTOR SHALL COORDINATE ALL WORK WITH OTHER TRADES PRIOR TO INSTALLATION.
10. ALL PLANTING AREAS SHALL BE BACKFILLED WITH TOPSOIL MIX, TO MEET PROPOSED GRADES. BACKFILL MIX SHALL CONSIST OF 2/3 NATIVE SOIL MIXED WITH 1/3 AMENDED SITE SOIL.
11. PLANT LOCATIONS ARE DIAGRAMMATIC AND WILL BE ADJUSTED IN THE FIELD BY THE LANDSCAPE ARCHITECT PRIOR TO INSTALLATION. OBTAIN APPROVAL OF PLANT LAYOUT FROM LANDSCAPE ARCHITECT PRIOR TO PLANTING.
12. NO PLANTS SHALL BE PLANTED WITH ROOT BALLS OR NEW PITS IN A DRY CONDITION.
13. CUT/LOOSEN SURFACE OF ROOTBALLS Of EACH PLANT PRIOR TO PLANTING.
14. ALL NEWLY PLANTED MATERIAL SHALL BE WATERED BY DEEP SOAKING WITHIN THREE HOURS OF PLANTING.
15. FINISH GRADE SHALL BE 3.5" BELOW TOP OF PAVING AND 9.5" BELOW TOP OF FOUNDATION TO ALLOW FOR 3" MULCH.
16. GRASSES AND GROUND COVERS SHALL BE PLANTED EVENLY AND CONTINUOUSLY UNDER TREE AND SHRUB MASSES. DO NOT PLANT WITHIN 4 FEET OF ROOT CROWNS OF NEW TREES.
17. ALL PLANTING AND SOIL AREAS SHALL RECEIVE A 3" MIN. DEPTH OF SOIL STABILIZING BARK MULCH TOP DRESSING.
18. PLANT QUANTITIES ARE PROVIDED AS AN AID TO THE CONTRACTOR. DESIGNER SHALL VERIFY ALL PLANT QUANTITIES IN THE FIELD.
19. PLANT MATERIAL SHALL BE IN GOOD CONDITION AND FREE OF PESTS AND DISEASES. ALL PLANTS ARE TO BE INSPECTED AND APPROVED BY LANDSCAPE CONTRACTOR AND OR DESIGNER.
20. SOIL BASINS SHALL BE CREATED AROUND EACH TREE TO BE IRRIGATED, 3 FT MINIMUM IN DIAMETER WITH SOIL HEIGHT OF 6"- 9" AROUND PERIMETER OF BASINS AND SOIL TO BE FLUSH WITH ROOT CROWN AT CENTERS, IN ORDER TO RETAIN MOISTURE AROUND ROOT SYSTEMS AND PREVENT IRRIGATION WATER RUNOFF.
21. REFER TO TREE AND SHRUB PLANTING DETAILS ON DETAILS SHEET FOR TREE STAKING AND PLANTING INSTRUCTIONS.
22. APPLY ORGANIC CORN BASED PRE-EMERGENT HERBICIDE: PER MANUFACTURER'S SPECIFICATIONS. PRIOR TO APPLYING MULCH TOP DRESSING.
23. REFER TO IRRIGATION PLAN FOR HYDROZONES AND IRRIGATION METHODS AND WATER USE VALUES.

PLANT LEGEND

SYM	BOTANICAL NAME	COMMON NAME	QTY	SIZE	COMMENTS
TREES					
ACma	ACER macrophylla	Big Leaf Maple	5	15 gal	
			2	1 gal	Riparian Area
Cerc	CERCIS occidentalis	Western Redbud Tree	8	15 gal	Nice Tree Forms
Querc	QUERCUS agnifolia	Coast Live Oak	1	5 gal	Riparian Area
Segse	SEQUOIA sempervirens	Coast Redwood	5	15 gal	
Umbel	UMBELLULARIA californica	California Bay Laurel	21	24" Box	
SHRUBS, GRASSES, PERENNIALS, GROUNDCOVERS					
Calyc	CALYCANTHUS occidentalis	Western Spice Bush	12	1 gal	
C	CAREX divulsa	Meadow Sedge	185	4" pot	Install Gopher Wire
Car	CARPENTERIA california 'Elizabeth'	Bush Anemone	19	5 gal	
CeanBl	CEANOTHUS 'Blue Jeans'	Blue Jeans Wild Lilac	15	5 gal	
J	JUNCUS 'Carman's Grey'	Blue Gray Rush	16	1 gal	
Hetarb	HETEROMELES argutifolia	Toyon, Hollywood	10	5 gal	
H	HEUCHERA micrantha	Coral Bells	25	1 gal	
I	IRIS Douglasiana, Pacific Coast Iris	Assorted Colors (Suncrest)	117	1 gal	Install Gopher Wire
RISA	RIBES sanguineum 'Barrie Coate' or similar	Pink Currant	11	5 gal	
RHAM	RHAMNUS californica	Coffeeberry	9	5 gal	
Mim	MIMULUS spp.	Best Long Lasting Monkeyflower	32	2 gal	
Sambc	SAMBUCUS mexicana	Elderberry	3	5 gal	Riparian Area
Wof	WOODWARDIA fimbriata	Giant Chain Fern	42	1 gal	
	RIPARIAN ENHANCEMENT AREA	SEE RIPARIAN PLAN, by Coast Ecology			

STATEMENTS OF COMPLIANCE

* I HAVE COMPLIED WITH THE CRITERIA OF THE ORDINANCE (CALIFORNIA MODEL WATER EFFICIENT LANDSCAPE ORDINANCE, TITLE 23) AND APPLIED THEM FOR THE EFFICIENT USE OF WATER IN THE LANDSCAPE DESIGN PLAN.

SEE IRRIGATION PLAN FOR HYDROZONE INFORMATION AND IRRIGATION WATER BUDGET CALCULATIONS.

Drake Design Associates, LLC grants Client a nonexclusive license to use Drake Design Associates' documents as provided in the Landscape Architecture Plans for the Improvements at 16190 Wood Acres Road, Los Gatos, CA. No other license is implied or granted. All instruments of professional service prepared by Drake Design Associates., including but not limited to, drawings and specifications, are the property of Drake Design Associates, LLC. These documents shall not be reused on other projects without written permission. Drake Design Associates LLC retains all rights in its documents.

DRAKE DESIGN ASSOCIATES, LLC
LANDSCAPE ARCHITECTURE STUDIO, RLA #6081
51 UNIVERSITY AVENUE, SUITE I, LOS GATOS, CA. 95030
WWW.DRAKEDESIGNASSOC.COM
408.688.7651

NEW RESIDENCE FOR:
NGUYEN RESIDENCE
16190 Wood Acres Road
Los Gatos, CA

PLANTING PLAN

DRAWN LD
CHECKED LD
DATE 4/28/2019
SCALE 1/8" = 1'-0"
REV
SHEET
L- 2.1
OF - SHEETS

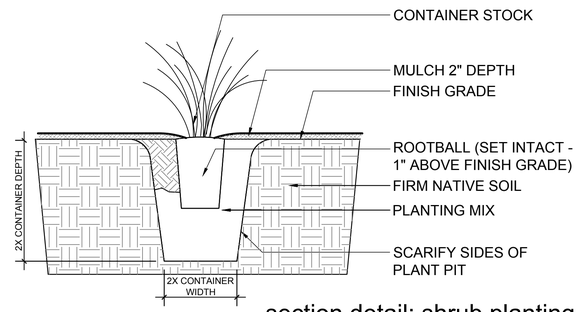

section detail: shrub planting | **3**

1"=1'-0" | L2.2

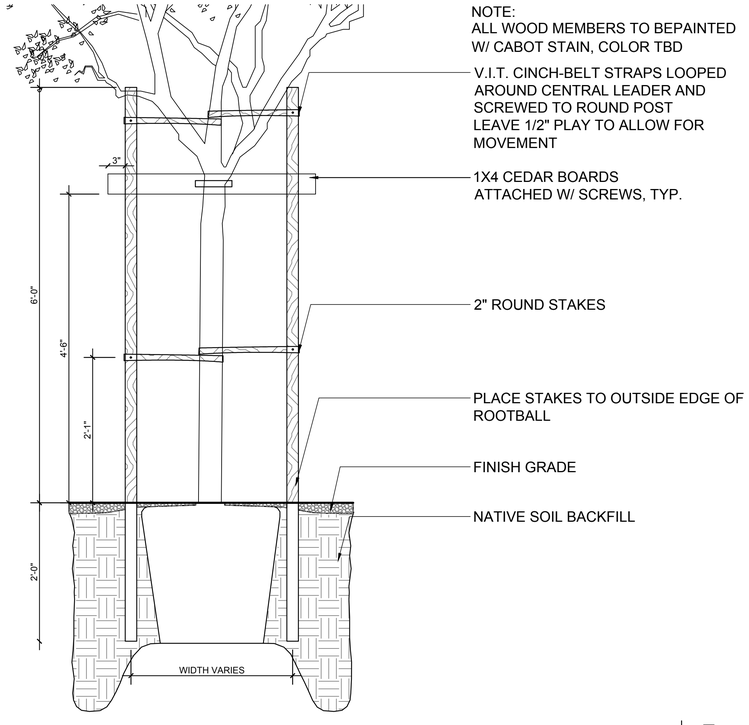

section detail: tree staking detail | **5**

1"=1'-0" | L2.2

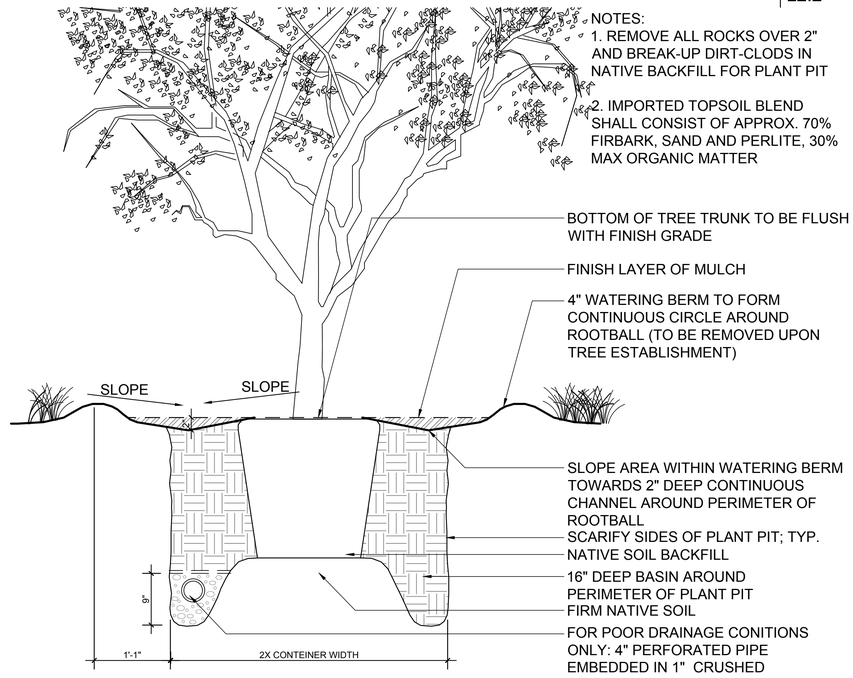

section detail: tree planting in lawn and vegetation | **2**

1"=1'-0" | L2.2

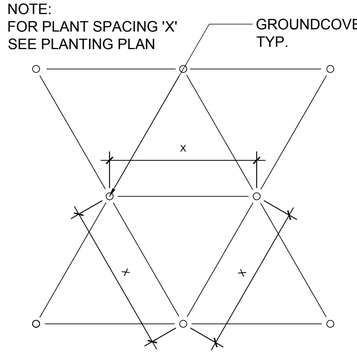

ground cover spacing | **7**

Scale:1-1/2" = 1'-0" | L2.2

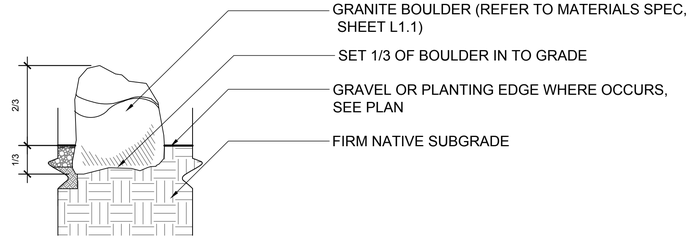

section detail: boulder | **4**

Scale:1-1/2" = 1'-0" | L2.2

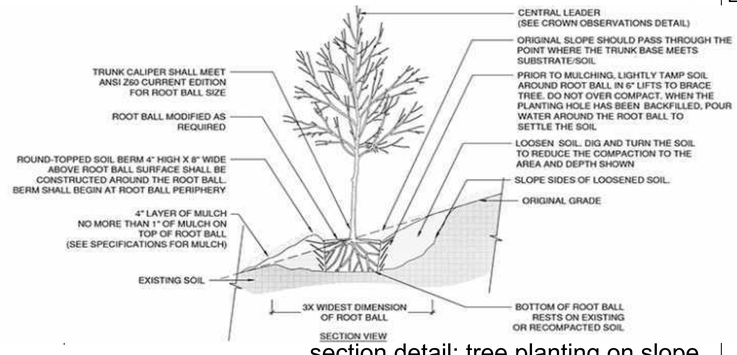

section detail: tree planting on slope | **1**

Scale: nts | L2.2

Drake Design Associates, LLC grants Client a nonexclusive license to use Drake Design Associates' documents as provided in the Landscape Architecture Plans for the Improvements for 16190 Wood Acres Rd, Los Gatos, CA. No other license is implied or granted. All instruments of professional service prepared by Drake Design Associates., including but not limited to, drawings and specifications, are the property of Drake Design Associates, LLC. These documents shall not be reused on other projects or by other professionals without written permission. Drake Design Associates LLC retains all rights in its documents.

DRAKE DESIGN ASSOCIATES, LLC
LANDSCAPE ARCHITECTURE STUDIO, RLA #6081
51 UNIVERSITY AVENUE, SUITE I, LOS GATOS, CA. 95030
WWW.DRAKEDESIGNASSOC.COM
408.668.7651

NGUYEN RESIDENCE
16190 WOOD ACRES RD.
LOS GATOS, CA 95032

PLANTING DETAILS

DRAWN	LD
CHECKED	LD
DATE	04/30/2019
SCALE	As Shown
REV	
SHEET	L- 2.2
OF - SHEETS	

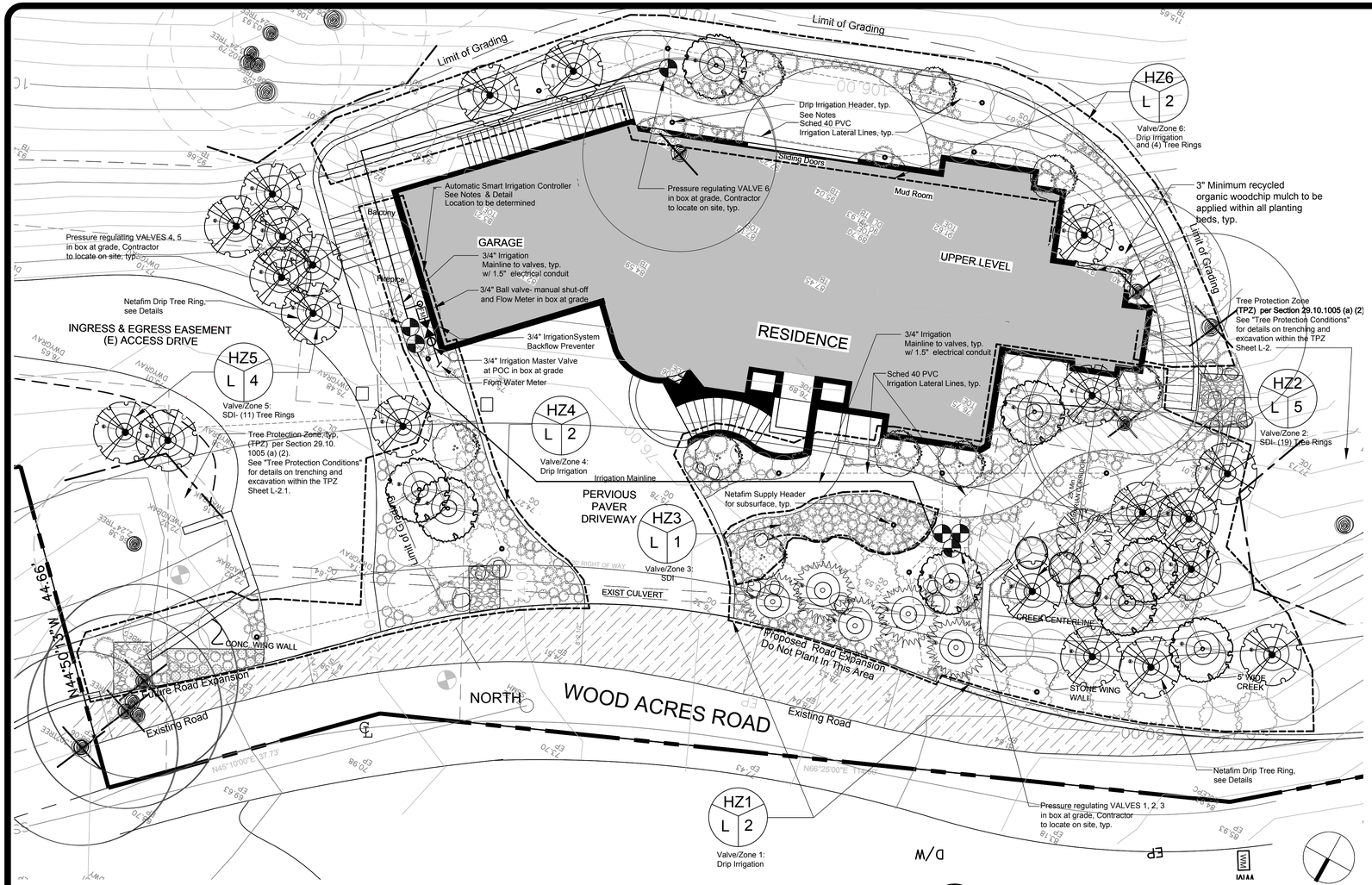

1 IRRIGATION PLAN
SCALE: 1/8" = 1'-0"

IRRIGATION SYSTEM INFORMATION:

Total Planted Area:	5,402 sq ft
Static Water Pressure	50+/- (Contractor to verify prior to installation)
Flow rate	30 gal/ min
Application Rate	.75 inches/hr
Design operating pressure	30 psi for all valves/stations
Estimated Total GPM's	45 gpm
Irrigation Schedule	Scheduled by weather based controller, and determined by slope, soils, sun exposure, plant types
Average Water Time	30 min/week per zone
Estimated Gallons/Yr	55,484 Gal until Established, then 22,000 Gal or less

IRRIGATION LEGEND

WM	Water Meter	3/4" Water Meter
Rainbird	XCZ-LF-075 Low Flow Kit (or equivalent)	Automatic 3/4" Inline Valve w/ built in Wye Filter and 30 psi Pressure Regulator
		Hydro Zone and Valve Zone areas
		3/4" Irrigation Main line, Sched 40 PVC
		3/4" - 1" Irrigation Lateral line, sized as needed, Sched 40 PVC
	Netafim Techline CV	2 Ring Dripline Tubing, 12" spacing between 1 gph emitters around New and Existing Trees where shown. See Details for components, layout and manual flush valve
	Netafim Subsurface Drip	See Manufacturer's instructions for installation requirements
	Hunter 1 gph emitter (or equivalent)	Drip emitters: 1 per gallon plants 2 per 5 gallon plants, Flax, Roses, Bamboo, and All Vines (1 gph) 3 - 4 per Citrus Trees and 15 gal plants (1 gph) Emitters to be barbed on both ends. Bug plug at each end. See diagram, Sheet L-3.2
	Lateral line stub up to dripline tubing	
FS	Flow Sensor	In valve box at grade
	Manual Shut Off Valve	Manual Valve for servicing system
	Master Valve	Irrigation System Master Valve at POC
C	Toro/ ET Water Controller (Or Equivalent)	16 Zone Toro Automatic Controller With Evapotranspiration and rain sensor technology
	Back Flow Preventer	3/4" Backflow Prevention Device (Wilkins 1-975xl or equal) at Mainline (location TBD)

HYDROZONE & 3/4" VALVE #
Water Use: L=Low, M=Moderate, H=High
gpm

A: HYDROZONE INFORMATION TABLE

	HYDROZONE	ZONE OR VALVE	IRRIGATION METHOD	AREA IN SQ FT	% OF TOTAL LANDSCAPE AREA
decrease irrig. after 1 - 2 years	Low & Med Water Use Native Plants	1	Drip	2,180	40%
decrease irrig. after 2-3 years	Native Riparian Trees	2	Subsurface Drip (SDI)	30 sq ft/tree x 19 = 570	12%
	Native Low Water Use Groundcover Plants	3	Subsurface Drip (SDI)	182	3%
decrease irrig. after 1 - 2 years	Low & Med Water Use Native Plants	4	Drip	1,070	20%
decrease irrig. after 2-3 years	Native Riparian Trees	5	Subsurface Drip (SDI)	30 sq ft/tree x 11 = 330	5%
decrease irrig. after 1 - 2 years	Low & Med Water Use Native Plants	6	Drip	1,070	20%
SPECIAL LANDSCAPE AREA:				0	0%
TOTAL LANDSCAPE AREA:				5,402	100%

B: WATER EFFICIENCY CALCULATIONS

§ 495 BARCLAYS CALIFORNIA CODE OF REGULATIONS Title 23

Appendix B — Sample Water Efficient Landscape Worksheet.

WATER EFFICIENT LANDSCAPE WORKSHEET

This worksheet is filled out by the project applicant and it is a required element of the Landscape Documentation Package.

Reference Evapotranspiration (ETo) 42.9

Hydrozone # /Planting Description[A]	Plant Factor (PF)	Irrigation Method[B]	Irrigation Efficiency (IE)[C]	ETAF (PFIE)	Landscape Area (sq. ft.)	ETAF x Area	Estimated Total Water Use (ETWU)[D]
Regular Landscape Areas (See Hydrozone Chart for zone information)							
Zones 1, 4, 6	.3	Drip	.81	.37	4,320	1,599	42,530
Zones 2, 5	.4	SDI	.81	.49	900	441	11,730
Zone 3	.2	SDI	.81	.25	182	46	1,224
				Totals:	(A) 5,402	(B) 2,086	55,484
				1			
				1			
				1			
			Totals	(C)	(D)		
					ETWU Total		55,484
					Maximum Allowed Water Allowance (MAWA)[E]		79,025

[A]Hydrozone #/Planting Description E.g 1.) front lawn 2.) low water use plantings 3.) medium water use planting

[B]Irrigation Method overhead spray or drip

[C]Irrigation Efficiency 0.75 for spray head 0.81 for drip

[D]ETWU (Annual Gallons Required) = Eto x 0.62 x ETAF x Area where 0.62 is a conversion factor that converts acre-inches per acre per year to gallons per square foot per year.

[E]MAWA (Annual Gallons Allowed) = (Eto) (.0.62) [(ETAF x LA) + ((1-ETAF) x SLA)] where 0.62 is a conversion factor that converts acre-inches per acre per year to gallons per square foot per year, LA is the total landscape area in square feet, SLA is the total special landscape area in square feet, and ETAF is .55 for residential areas and 0.45 for non-residential areas.

ETWU = 42.9 (0.62) (ETAF x Area)
MAWA = (ETo) [(0.62) (ETAF x LA) +[(1 - ETAF) x SLA]
42.9 (0.62) (.55 x 5,402) + 0
42.9 (0.62) (2,971) + 0
79,025

ETAF Calculations

Regular Landscape Areas	
Total ETAF x Area	(B)
Total Area	(A)
Average ETAF	B ÷ A

B = 2,086
A = 5,402
B /A = Average ETAF: 0.39

Average ETAF for Regular Landscape Areas must be 0.55 or below for residential areas, and 0.45 or below for non-residential areas.

IRRIGATION SCHEDULE:

THIS IRRIGATION SCHEDULE IS DESIGNED TO BE AUTOMATED WITH AN EVAPOTRANSPORATION RATE AND WEATHER BASED CONTROLLER. SEE IRRIGATION LEGEND. HOWEVER, SINCE THE LANDSCAPE'S NEEDS FOR WATER MAY VARY, THE CONTROLLER STILL NEEDS TO BE MONITORED AND ADJUSTED FROM TIME TO TIME, AS ON A STANDARD CONTROLLER.

ALL IRRIGATION SCHEDULING SHALL OCCUR BETWEEN THE HOURS OF 8:00 PM AND 8:00 AM, TO DECREASE OVERALL EVAPOTRANSPIRATION CAUSED BY SUN AND WIND.

THE AVERAGE IRRIGATION SCHEDULE SHALL BE AS FOLLOWS:

1) SHRUBS AND PERENNIAL PLANTING BEDS: 2 - 3 DAYS A WEEK FOR 15 - 30 MINUTES
2) TREES- SUBSURFACE DRIP RINGS: 2 DAYS A WEEK FOR 30 - 40 MINUTES UNTIL ESTABLISHED

FROM THE MONTHS OF MARCH THROUGH NOVEMBER.

SYSTEM SHALL NOT OPERATE DURING RAINY MONTHS- TYPICALLY BETWEEN DECEMBER AND MARCH, EXCEPT AS TO SUPPLEMENT EXPECTED RAINFALL, AND EXCEPT FOR THE FOLLOWING:.

PLANTS UNDER EAVES SHALL BE MONITORED AND WATERED AS NEEDED THROUGHOUT YEAR, AS THEY WILL NOT RECIEVE RAINFALL.

ZONES SHALL BE MONITORED AFTER ONE SEASON FOR OVERWATERING. AFTER ONE YEAR, MONITOR CLOSELY AND WATER AS NEEDED.

AUDITS SHALL BE CONDUCTED BY A CERTIFIED LANDSCAPE IRRIGATION AUDITOR, AND IN ACCORDANCE WITH THE STATE OF CALIFORNIA LANDSCAPE WATER MANAGEMENT PROGRAM, DESCRIBED IN *THE LANDSCAPE IRRIGATION AUDITOR HANDBOOK*.

STATEMENTS OF COMPLIANCE

* I HAVE COMPLIED WITH THE CRITERIA OF THE ORDINANCE (CALIFORNIA MODEL WATER EFFICIENT LANDSCAPE ORDINANCE, TITLE 23) AND APPLIED THEM FOR THE EFFICIENT USE OF WATER IN THE LANDSCAPE DESIGN PLAN.

IRRIGATION NOTES:

THIS SYSTEM SHALL BE EQUIPPED WITH A MASTER SHUT OFF VALVE AND FLOW SENSOR.

A MANUAL BALL VALVE SHALL BE INSTALLED ON IRRIGATION MAINLINE FOR MAINTENANCE PERFORMANCE AT EACH VALVE BOX LOCATION.

THIS IRRIGATION SYSTEM IS DESIGNED TO OPERATE ON A STATIC PRESSURE OF 45 PSI MIN. TO 60 PSI MAX. IF A DISCREPANCY EXISTS PLEASE NOTIFY LANDSCAPE CONTRACTOR.

THIS IRRIGATION SYSTEM IS TO BE INSTALLED IN CONFORMANCE WITH ALL LOCAL CODES.

PRESSURE REGULATING REMOTE CONTROL VALVES SHALL BE INSTALLED FLUSH WITH FINISH GRADE IN VALVE BOXES AND SHOULD BE INSTALLED IN PLANTING AREAS ONLY.

THIS IRRIGATION DESIGN IS DIAGRAMMATIC IN NATURE AND DOES NOT REPRESENT AN EXACT LAYOUT. THE CONTRACTOR SHALL MAKE ADJUSTMENTS IN LAYOUT OF VALVES, PIPING AND OTHER COMPONENTS.

LATERAL LINES TO BE SCHEDULE 40 PVC PIPE, AND HAVE 1" STUB UPS APPROXIMATELY EVERY 30 FEET TO TIE INTO .700 POLY VINYL 5/8" DRIP TUBING.

THIS IRRIGATION SYSTEM IS DESIGNED TO BE SCHEDULED BY A WEATHER SATELLITE REGULATED EVAPOTRANSPIRATION BASED CONTROLLER WITH RAIN SENSING TECHNOLOGY, IN CONJUNCTION WITH A FLOW SENSOR DETECTING UNUSUAL HIGH FLOW IN THE CASE OF A LINE BREAK, WITH ALERTS TO NOTIFY IRRIGATION TECHNICIAN, AND A MANUAL SHUT OFF VALVE AS CLOSE TO POINT OF CONNECTION AS POSSIBLE.

ALL PLANTING BEDS, INCLUDING GROUNDCOVERS, TO BE IRRIGATED BY DRIP IRRIGATION, IN CONJUNCTION WITH A WEATHER SATELLITE REGULATED EVAPOTRANSPIRATION (ET) BASED CONTROLLER.

TREES SHALL BE IRRIGATED BY NETAFIM DRIPLINE, IN CONJUNCTION WITH A WEATHER SATELLITE REGULATED EVAPOTRANSPIRATION (ET) BASED CONTROLLER. SEE DETAILS FOR LAYOUT

THERE ARE NO OVERHEAD SPRINKLERS OR ROTARS DESIGNED IN THIS SYSTEM

IRRIGATION HYDROZONES ARE DESIGNED TO DIVIDE DIFFERENT SUN/SHADE CONDITIONS & WATERING NEEDS ONTO SEPARATE IRRIGATION VALVES FOR OPTIMUM PLANT HEALTH, AND EFFICIENT WATER USE.

IRRIGATION WATER LINES ARE SET IN TRENCHES AT 12" DEEP, ELECTRICAL IS SET AT 18" DEEP

CONTRACTOR TO CONFIRM THE LOCATION OF ALL EXISTING UTILITIES AND UNDERGROUND STRUCTURES PRIOR TO EXCAVATION OF TRENCHES. CONTRACTOR TO REPAIR ANY DAMAGES CAUSED BY, OR DURING THE PERFORMANCE OF HIS WORK AT NO EXTRA COST TO THE OWNER.

IRRIGATION TRENCHING & PIPING, VALVES AND COMPONENTS ARE TO BE PLACED OUTSIDE OF TREE PROTECTION ZONES. SEE SHEET TREE PROTECTION PLAN FOR DETAILS AND FOLLOW STANDARDS PER COUNTY OF SANTA CLARA.

Drake Design Associates, LLC grants Client a nonexclusive license to use Drake Design Associates' documents as provided in the Landscape Architecture Plans for the Improvements at 16190 Wood Acres Road, Los Gatos, CA. No other license is implied or granted. All instruments of professional service prepared by Drake Design Associates., including but not limited to, drawings and specifications, are the property of Drake Design Associates, LLC. These documents shall not be reused on other projects without written permission. Drake Design Associates LLC retains all rights in its documents.

DRAKE DESIGN ASSOCIATES, LLC
LANDSCAPE ARCHITECTURE STUDIO, RLA #6081
51 UNIVERSITY AVENUE, SUITE I, LOS GATOS, CA. 95030
WWW.DRAKEDESIGNASSOC.COM
408.688.7651

NEW RESIDENCE FOR:
NGUYEN RESIDENCE
16190 Wood Acres Road
Los Gatos, CA

IRRIGATION PLAN
& WATER EFF. CALCS.

DRAWN
LD
CHECKED
LD
DATE
4/30/2019
SCALE
1/8" = 1'-0"
REV

SHEET
L- 3.1
OF - SHEETS

Drake Design Associates, LLC grants Client a nonexclusive license to use Drake Design Associates' documents as provided in the Landscape Architecture Plans for the Improvements for 16190 Wood Acres Rd, Los Gatos, CA. No other license is implied or granted. All instruments of professional service prepared by Drake Design Associates, including but not limited to, drawings and specifications, are the property of Drake Design Associates, LLC. These documents shall not be reused on other projects or by other professionals without written permission. Drake Design Associates LLC retains all rights in its documents.

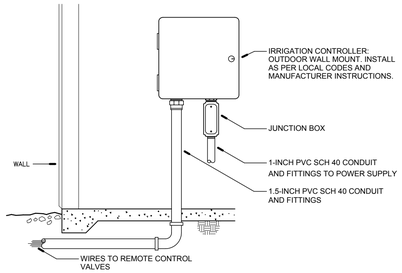

irrigation controller **9**
with evapotranspiration sensing technology — Scale: 1/4"=1'-0" | L-02

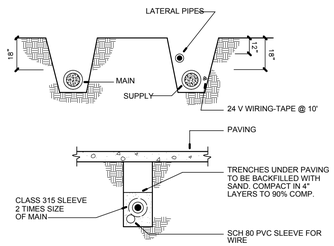

trenching detail **8**
Scale: 1/4"=1'-0" | L-02

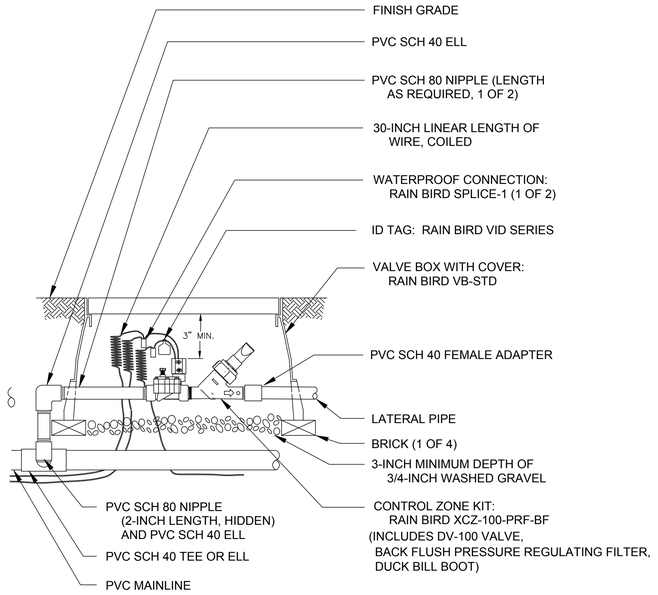

1" CONTROL ZONE KIT WITH PRESSURE REGULATING BACKFLUSH FILTER

valve assembly **5**
Scale: 1/4"=1'-0" | L-02

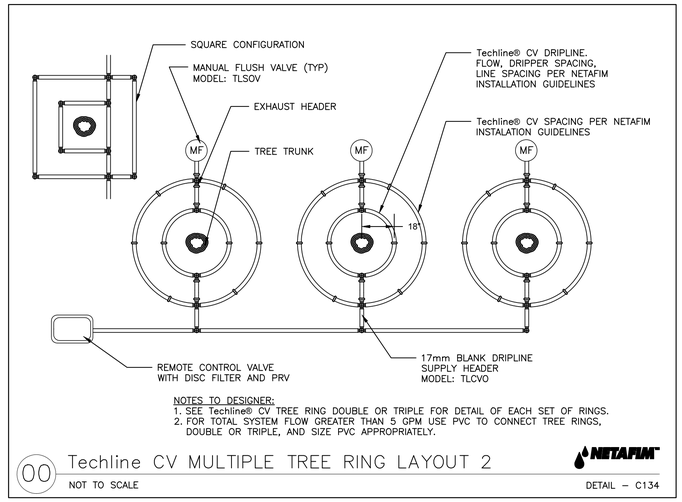

tree irrigation **3**
Scale: 1/4"=1'-0" | L-02

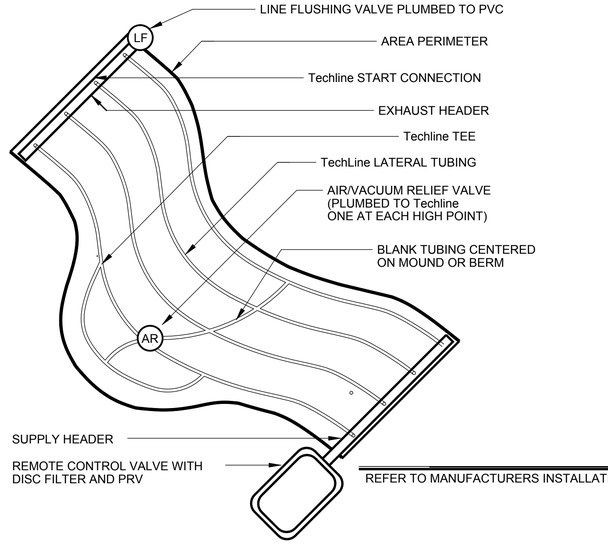

REFER TO MANUFACTURERS INSTALLATION DETAILS

subsurface drip irrigation **2**
Scale: 1/4"=1'-0" | L-02

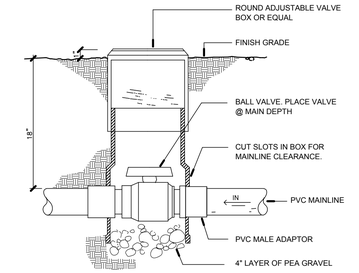

ball valve **7**
Scale: 1/4"=1'-0" | L-02

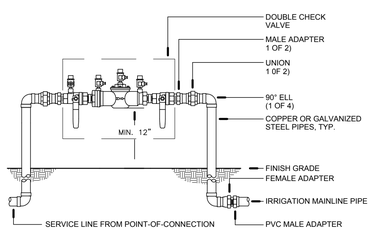

NOTES:
1. INSTALL ACCORDING TO MANUFACTURER'S SPECIFICATIONS
2. INSTALL BACKFLOW PREVENTER AS REQUIRED BY LOCAL CODES AND HEALTH DEPARTMENT.
3. VERIFY LOCAL REQUIREMENTS PRIOR TO INSTALLATION.
4. CONTRACTOR TO PRICE COMPLETE INSTALLATION UNLESS OTHERWISE INFORMED.

backflow preventer **6**
Scale: 1/4"=1'-0" | L-02

RAIN BIRD

XCZ-100-PRF-BF

1" pre-assembled kit with in-line valve and automatic Back Flush Filter

This compact, factory assembled two-piece kit combines the 1" DV Valve with the 1" Pressure Regulating Back Flush Filter to save installation time. The Pressure Regulating Back Flush Filter is a 200 mesh (75 micron) automatic self-cleaning filter that includes a 40 psi (2.8 bars) pressure regulator. The Back Flush Filter should be used in municipal water applications only.

Click here to View the Back Flush Filter Interactive Demo.

Specifications

- Flow: .3 to 15 GPM (0.19 to 0.95 l/s)
- Inlet Pressure: 20 to 150 psi (1.4 to 6.3 bar)
- Regulated Pressure: 40 psi (2.8 bar)
- Filtration: 200 mesh (75 micron)
- Connections: 1" inlet and outlet (N.P.T.)
- Size: 10" (25 cm) overall length

Caution: An in-line check valve is required if the kit is not at the highest point in the irrigation system.

Pressure Loss Chart

In order to supply 40 psi (2,8 bars) outlet pressure, additional pressure is needed at the inlet since there is some pressure loss from water flowing through the kit. The amount of pressure loss depends on the flowrate. The charts below list the minimum inlet pressure required to supply 40 psi (2,8 bars) of outlet pressure.

Minimum Inlet Pressure for 40 psi Outlet Pressure	
Flow GPM	PSI
3	42.2
5	44.5
8	47.5
10	49.5
15	57.4

Metric

Minimum Inlet Pressure for 2,8 Bars Outlet Pressure		
Flow l/h	Flow l/s	Bars
681	0,19	3,0
1136	0,32	3,1
1817	0,50	3,3
2271	0,63	3,4
3407	0,95	4,0

click to enlarge

Helpful Tools

Installation Instructions (PDF, 1,382 KB)
CAD Detail Drawing (DWG, 153 KB)
CAD Detail Drawing (DXF, 454 KB)
CAD Detail Drawing (PDF, 71 KB)
CSI Specs (WORD DOC, 182 KB)

Recommended Valve Box: VB Series Standard

click to enlarge

Recommended Valve Box: VB Series 10" Round

click to enlarge

Copyright © 1996-2009, Rain Bird Corporation

RAINBIRD
XCZ-100-PRF-BF

in line irrigation valves **4**
Scale: 1/4"=1'-0" | L-02

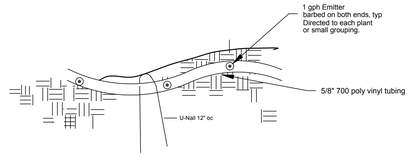

DRIP INSTALLATION METHOD 1 (PREFERRED METHOD)

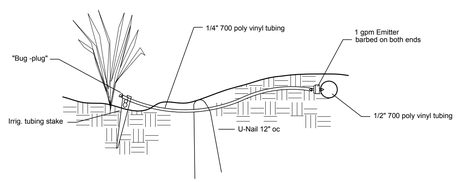

DRIP INSTALLATION METHOD 2

drip irrigation **1**
Scale: 1/4"=1'-0" | L-02

DRAKE DESIGN ASSOCIATES, LLC
LANDSCAPE ARCHITECTURE STUDIO, RLA #6081
51 UNIVERSITY AVENUE, SUITE I, LOS GATOS, CA. 95030
WWW.DRAKEDESIGNASSOC.COM
408.688.7651

LICENSED LANDSCAPE ARCHITECT
LEAH DRAKE
Signature
August 31, 2020
Renewal Date
4/30/2019
Date
STATE OF CALIFORNIA

NGUYEN RESIDENCE
16190 WOOD ACRES RD.
LOS GATOS, CA 95032

IRRIGATION DETAILS

DRAWN	LD
CHECKED	LD
DATE	4/30/2019
SCALE	As Shown
SHEET	L- 3.2
OF - SHEETS	

Drake Design Associates, LLC grants Client Lucas Nguyen and Margaret Pham a nonexclusive license to use Drake Design Associates' documents as provided in the Landscape Architecture Plans for the Improvements at 16190 Wood Acres Road, Los Gatos, CA. No other permission is implied or granted. All instruments of professional service prepared by Drake Design Associates., including but not limited to, drawings and specifications, are the property of Drake Design Associates, LLC. These documents shall not be reused on other projects or by other professionals without written permission. Drake Design Associates LLC retains all rights in its documents.

2.2 Monitoring Methods

The Riparian Enhancement Area will be evaluated by taking photo points and a qualitative assessment of percent cover. Because the area is so small, and a total of 15 plants/ trees will be installed, photo point monitoring is recommended rather than more rigorous methods of monitoring (e.g. quadrat sampling). Permanent photo-monitoring points will be established on site, and the number and orientation of photo points will be determined at the time of monitoring after erosion control, invasive species removal and native plant installation.

2.3 Monitoring and Reporting Schedule

A monitoring report will be prepared after the initial invasive plant control, erosion control and native plant species have been installed. The report will include photos and approximate percent cover of native and nonnative vegetation on the site. A final report will be prepared after 3 years to document the status of the Riparian Enhancement Area.

Monitoring reports will include, at a minimum, the following information:

- Qualitative assessment of erosion control on site
- Qualitative assessment of native and invasive plant cover and species composition
- Photo-documentation at fixed points

2.4 Contingency Recommendations

If annual monitoring results indicate that the performance or success criteria are not being met, then adaptive management will be implemented. Adaptive management methods may include additional weed control, erosion control, and/or supplemental replanting as necessary. Any additional measures recommended and/or implemented will be documented and reported in the initial and final monitoring reports.

SECTION 1: Introduction and Background

1.1 Introduction and Background

This Riparian Habitat Enhancement (plan) was prepared for Nguyen Residence on Wood Acres Road, Los Gatos, California. This plan has been prepared to address conditions in the Architecture & Site Approval Preliminary Conditions of Approval for File No. 4167-25-53 - 15BA - 15G -15DRX -15V, October 25, 2017. The plan will be submitted to the County of Santa Clara Planning Office for approval prior to the grading permit issuance. The plan provides details for the enhancement and revegetation of 305 square feet of riparian habitat on the property. The parcel is located in Los Gatos, California, on the south side of Wood Acres Road, approximately 0.64 miles south of Highway 9. San Tomas Aquino Creek flows along the northern border of the lot within an enclosed culvert, adjacent to Wood Acres Road. The lot area is 42,233 square feet (0.97 acres) in size, and the proposed residential development on site is approximately 6,000 square feet. The County of Santa Clara approved the application (File No. 4167-25-53 - 15BA - 15G -15DRX -15V) for Building Site Approval subject to the attached condition of approval:

(13.) A riparian habitat landscaping enhancement plan prepared by a qualified biologist shall be submitted for the Planning Office for approval prior to a grading permit issuance. To mitigate for the riparian habitat impacts to 305 sq. ft. encroaching within 25 ft. of the creek, a 1:1 ratio riparian habitat enhancement will be required. Approximately 305 sq. ft. in area shown on site plans consistent with biological report recommendations - labeled as "riparian habitat enhancement area," shall include planting of native riparian species (bay, big-leaf maple, and elderberry trees). A portion of the bay trees required to be replanted may be used for the riparian habitat enhancement.

1.2 Current Site Conditions

The Nguyen property is currently (as of July 2018) mostly forested with trees consisting of California bay (*Umbellularia californica*), coast live oak (*Quercus agrifolia*), and big-leaf maple (*Acer macrophyllum*). The lower slope of the property along Wood Acres Road, is dominated by invasive herbaceous and shrub species such as Himalaya blackberry (*Rubus armeniacus*), Italian thistle (*Carduus pycnocephalus*), French broom (*Genista monspessulana*), English Ivy (*Hedera helix*), and periwinkle (*Vinca major*). The northern edge of the property along Wood Acre Road is underlain by a culvert, (San Tomas Aquino Creek) and flow is from west to east. The property is bordered on the east and west by steep canyon sides of dense stands of California bay and big leaf maple trees. California bay and big-leaf maple trees are also the dominant vegetation along the open sections of San Tomas Aquino Creek (Photos 1 – 3).

A section of the property (the riparian zone) is located within 25 feet of the creek and the upstream culvert opening. This area is dominated by invasive herbaceous and shrub species including Himalaya blackberry, Italian thistle, French broom, English Ivy, and periwinkle (Photo 4). Since the soil was disturbed and compacted at some point in the past, invasive weeds have colonized this area, as well as into adjacent areas along the roadside. The proposed plan includes the control of invasive species within enhancement area and replanting of native riparian species that are suitable for the site based on the surrounding native vegetation.

SECTION 2: Goals, Monitoring and Success Criteria

2.1 Goals and Objectives

The goals for the Restoration Enhancement Plan are to:

- Maximize biological value of the riparian habitat on the property

The objectives to reach these goals are as follows:

- Provide erosion control for the site
- Maximize cover and diversity of native riparian plant species within the revegetated areas
- Minimize cover of non-native invasive plants in the newly revegetated areas

Table 1 Objectives, success criteria, and methods for measuring success criteria.

Restoration Objectives	Success Criteria	Method for Measuring Success Criteria
1) Provide erosion control	Revegetated areas remain stable. No evidence of gullies, rilling, or sheet erosion	-Visual, qualitative observations -Photo-monitoring documentation
2) Maximize cover and diversity of native plant species	Native plant species attain an estimated 80% cover or greater within the Riparian Enhancement Area.	-Visual, qualitative observations -Photo-monitoring documentation
3) Minimize absolute cover of non-native invasive plants in newly revegetated areas[1]	Non-native (Invasive) plant species show an estimated 20% cover or less within the Riparian Enhancement Area.	-Visual, qualitative observations -Photo-monitoring documentation

1. The applicant will control any invasive weeds (as defined by the California Invasive Plant Council as moderately or highly invasive) that may limit the growth of native species.

Riparian Habitat Enhancement Plan
For 16190 Wood Acres Road, Los Gatos, CA
APN: 510-53-015

Prepared for:

Leah Drake, RLA, ASLA
Drake Design Landscape Architecture
51 University Avenue, Suite I
Los Gatos, CA 95031

In compliance with Architecture & Site Approval
Preliminary Conditions of Approval for
County of Santa Clara,
File No. 4167-25-53 - 15BA - 15G -15DRX -15V

County of Santa Clara
70 W. Hedding Street, East Wing 7th Floor
San Jose, CA 95110

Prepared by:
Coast Ridge Ecology
1410 31st Avenue
San Francisco, CA 94122
(415) 404-6757

July 2018

Table of Contents

SECTION 1: Introduction and Background 1
1.1 Introduction and Background 1
1.2 Current Site Conditions 1
SECTION 2: Goals, Monitoring and Success Criteria 2
2.1 Goals and Objectives 2
2.2 Monitoring Methods 3
2.3 Monitoring and Reporting Schedule 3
2.4 Contingency Recommendations 3
SECTION 3: Site Preparation, Planting and Maintenance 5
3.1 Soil Preparation 5
3.2 Erosion Control 5
3.3 Replanting 5
3.4 Irrigation 6
3.5 Weed Control and Maintenance 6
References 7

List of Figures

1 Riparian Habitat Enhancement Area 4

List of Tables

1 Objectives, success criteria, and methods for measuring success criteria 2
2 Planting List 5
3 Restoration tasks, responsible parties and timeline 6

Representative Photos 8

DRAKE DESIGN ASSOCIATES, LLC
LANDSCAPE ARCHITECTURE STUDIO, RLA #6081
51 UNIVERSITY AVENUE, SUITE I, LOS GATOS, CA. 95030
WWW.DRAKEDESIGNASSOC.COM
408.688.7651

NEW RESIDENCE FOR:
NGUYEN RESIDENCE
16190 Wood Acres Road
Los Gatos, CA

RIPARIAN HABITAT
ENHANCEMENT PLAN

DRAWN
LD
CHECKED
LD
DATE
4/30/2019
SCALE

SHEET
L- 4.1
OF – SHEETS

Drake Design Associates, LLC grants Client Lucas Nguyen and Margaret Pham a nonexclusive license to use Drake Design Associates' documents as provided in the Landscape Architecture Plans for the Improvements at 16190 Wood Acres Road, Los Gatos, CA. No other permission is implied or granted. All instruments of professional service prepared by Drake Design Associates., including but not limited to, drawings and specifications, are the property of Drake Design Associates, LLC. These documents shall not be reused on other projects or by other professionals without written permission. Drake Design Associates LLC retains all rights in its documents.

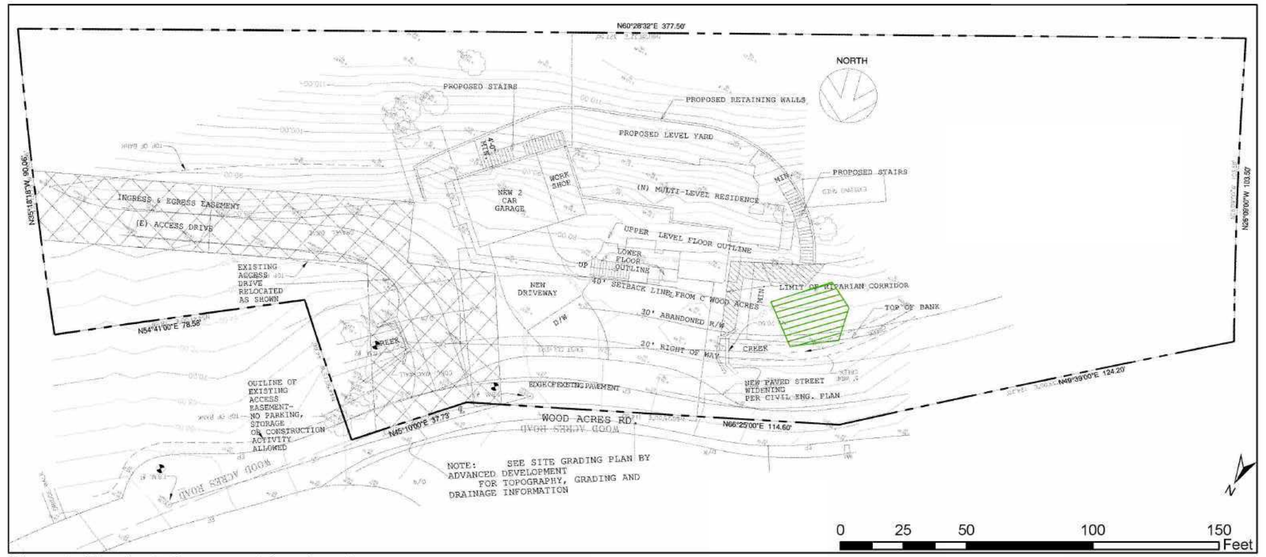

Figure 1: Riparian Enhancement Area Location
16190 Wood Acres Road, Los Gatos, CA
Topographic Map Source: Advanced Development

Legend
Riparian Enhancement Area (approximately 305 square feet)

DRAKE DESIGN ASSOCIATES, LLC
LANDSCAPE ARCHITECTURE STUDIO, RLA #6081
51 UNIVERSITY AVENUE, SUITE 1, LOS GATOS, CA. 95030
WWW.DRAKEDESIGNASSOC.COM
408.688.7651

NEW RESIDENCE FOR:
NGUYEN RESIDENCE
16190 Wood Acres Road
Los Gatos, CA

RIPARIAN HABITAT ENHANCEMENT PLAN

DRAWN
LD
CHECKED
LD
DATE
4/30/2019
SCALE

SHEET
L- 4.2
OF – SHEETS

SECTION 3: Site Preparation, Planting and Maintenance

3.1 Soil Preparation

The project area is a gradual sloping terrace, and is surrounded by well vegetated areas. After the clearing of weeds and prior to planting, the condition of top soil will be assessed (by landscape architect or restoration contractor) and amounts and types of soil amendments appropriate to each area and species will be applied at that time. Some mulching may need to be done to help inhibit weeds and retain moisture around the plants.

3.2 Erosion Control

During most rainfall events, it could be expected that the project site would generate sheet-flow or runoff from the site based on the sloping topography. The applicant shall follow all County of Santa Clara and/or Town of Los Gatos conditions as they apply to the development permit. If erosion control is needed on site, erosion control mats, blankets, or wattles should be composed entirely of biodegradable materials such as coir fabric, coconut fiber, and/or sterile wheat or rice straw. These materials will break down over time once the restoration areas are fully established. The use of invasive exotic species for erosion control will not be allowed. Further reading on proper best management practices and installation can be found in County Grading Ordinance online publication (County of Santa Clara, 2018).

3.3 Replanting

A total of 15 native plants would be planted within the Riparian Enhancement Area (Table 2). Based on the proximity of native vegetation within the adjacent riparian corridor, it is likely that aggressive native species from the riparian corridor will colonize the restoration area (especially California Bay), which will add to the overall native plant cover, but may reduce the species diversity on site. All plants for the Riparian Enhancement Area are native riparian species that occur within the San Thomas Aquino Creek watershed.

TABLE 2. Planting List

Scientific Name	Common Name	Quantity	Size
Umbellularia californica	California Bay	2	1 gallon
Acer macrophyllum	Big-leaf maple	2	1 gallon
Quercus agrifolia	Coast live oak	1	1 gallon
Sambucus nigra ssp. caerulea	Blue elderberry	2	1 gallon
Rubus ursinus	California blackberry	8	2 gallon
	TOTAL	**15**	

Trees will be planted on 5' centers and shrubs (i.e. Californi blackberry) will be planted on 3' centers.

3.4 Irrigation

Appropriate water (either through rainfall alone or with supplemental watering) will be vital towards successful establishment of plantings in the first year. Plants will be installed in the late fall/winter, prior to or soon after the first rains. If irrigation is to be installed, then plant installation may occur at other times of year. Once plants have established after the first year, watering will only be provided during extreme dry periods, either by hand or other methods to ensure plantings do not desiccate. The health of the planted vegetation should be checked and water if needed, twice per month during the first year after installation.

3.5 Weed Control and Maintenance

Weeds will be controlled via hand or mechanical methods in February and May (minimum 2 weed control events per year). Weed plant mass will be removed from the site either through raking or piling and disposed of properly to prevent inadvertent seed dispersal.

Table 3 Scope of Work including restoration tasks, responsible parties and proper timeline

Restoration Task	Responsible Party	Timeline
1. Delineate Riparian Enhancement Area with flagging or fence boundary	Restoration Contractor	Prior to planting
2. Remove existing invasive nonnative vegetation on site (control invasive weeds)	Restoration Contractor	Prior to Planting. Invasive species control to be conducted approximately 2x per year, minimum
3. Plant installation	Restoration Contractor	Late Fall/ Winter (though may be conducted other times of year if irrigation used).
4. Install erosion control	Restoration Contractor	To be conducted as needed in concert with clearing and planting
5. Establish project photo-monitoring points to cover all Riparian Enhancement Area	Restoration Contractor or Biological Monitor	Prior to ground disturbance for restoration activities
6. Inspection and maintenance of planted areas including: A) Supplemental Watering, as needed B) Invasive Species Control, as needed C) Erosion Control, as needed	Restoration Contractor	Supplemental watering as needed through first spring and summer
7. Initial monitoring report after plant installation and final monitoring will be submitted to the County of Santa Clara.	Restoration Contractor/ Biological Monitor	Year 1 report within 30 days after plant installation, and final report after 3 years.

References

County of Santa Clara. 2018. County's Grading Ordinance, Requirements for Construction Projects for Santa Clara County Requirements. San Jose, CA https://library.municode.com/ca/santa_clara_county/codes/code_of_ordinances?nodeId=TITCODELAUS_DIVC12SULADE_CHIIGRDR

Architecture & Site Approval Preliminary Conditions of Approval File No: 4167-25-53 - 15BA - 15G -15DRX - 15V, October 25, 2017. County of Santa Clara 70 W. Hedding Street, East Wing 7th Floor, San Jose, CA 95110.

1410 31ST AVENUE – SAN FRANCISCO CA 94122 – PH: 415-404-6757 – CELL: 650-269-3894
EMAIL: CRECOLOGY@GMAIL.COM – WWW.CRECOLOGY.COM

1410 31ST AVENUE – SAN FRANCISCO CA 94122 – PH: 415-404-6757 – CELL: 650-269-3894
EMAIL: CRECOLOGY@GMAIL.COM – WWW.CRECOLOGY.COM

Drake Design Associates, LLC grants Client Lucas Nguyen and Margaret Pham a nonexclusive license to use Drake Design Associates' documents as provided in the Landscape Architecture Plans for the Improvements at 16190 Wood Acres Road, Los Gatos, CA. No other permission is implied or granted. All instruments of professional service prepared by Drake Design Associates., including but not limited to, drawings and specifications, are the property of Drake Design Associates, LLC. These documents shall not be reused on other projects or by other professionals without written permission. Drake Design Associates LLC retains all rights in its documents.

Representative Photos



Photo 1. View of Nguyen property, looking southwest. Gravel road in the lower portion of photo is the lower (street level) section of lot. Invasive herbaceous plants and shrubs are shown in the foreground, with California bay woodland located upslope in the background. Photo date: July 18, 2018.

1410 31ST AVENUE – SAN FRANCISCO CA 94122 – PH: 415-404-6757 – CELL: 650-269-3894
EMAIL: CRECOLOGY@GMAIL.COM – WWW.CRECOLOGY.COM



Photo 2. View of Nguyen property, looking west. Weeds such as Italian thistle and French broom are in the foreground and California bay and big-leaf maple trees are shown in the background (riparian corridor off-site). Photo date: July 18, 2018.

1410 31ST AVENUE – SAN FRANCISCO CA 94122 – PH: 415-404-6757 – CELL: 650-269-3894
EMAIL: CRECOLOGY@GMAIL.COM – WWW.CRECOLOGY.COM

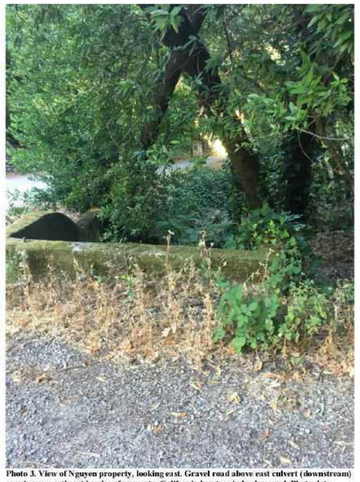

Photo 3. View of Nguyen property, looking east. Gravel road above east culvert (downstream) opening on northeast border of property. California bay tree in background. Photo date: July 18, 2018.

1410 31ST AVENUE – SAN FRANCISCO CA 94122 – PH: 415-404-6757 – CELL: 650-269-3894
EMAIL: CRECOLOGY@GMAIL.COM – WWW.CRECOLOGY.COM



Photo 4. View of Nguyen property, looking southwest.. Existing condition of riparian habitat on-site dominated by English ivy and periwinkle (area of Riparian Habitat Enhancement Plan). Photo date: July 19, 2018.

1410 31ST AVENUE – SAN FRANCISCO CA 94122 – PH: 415-404-6757 – CELL: 650-269-3894
EMAIL: CRECOLOGY@GMAIL.COM – WWW.CRECOLOGY.COM

DRAKE DESIGN ASSOCIATES, LLC
LANDSCAPE ARCHITECTURE STUDIO, RLA #6081
51 UNIVERSITY AVENUE, SUITE 1, LOS GATOS, CA. 95030
WWW.DRAKEDESIGNASSOC.COM
408.688.7651

NEW RESIDENCE FOR:
NGUYEN RESIDENCE
16190 Wood Acres Road
Los Gatos, CA

RIPARIAN HABITAT ENHANCEMENT PLAN

DRAWN	LD
CHECKED	LD
DATE	4/30/2019
SCALE	
SHEET	L- 4.3
OF	– SHEETS

Drake Design Associates, LLC grants Client Lucas Nguyen and Margaret Pham a nonexclusive license to use Drake Design Associates' documents as provided in the Landscape Architecture Plans for the Improvements at 16190 Wood Acres Road, Los Gatos, CA. No other permission is implied or granted. All instruments of professional service prepared by Drake Design Associates., including but not limited to, drawings and specifications, are the property of Drake Design Associates, LLC. These documents shall not be reused on other projects or by other professionals without written permission. Drake Design Associates LLC retains all rights in its documents.

COAST RIDGE ECOLOGY LLC
BIOLOGICAL SURVEYS • MONITORING • PERMITTING • RESEARCH

July 25, 2018

Leah Drake, RLA, ASLA
Drake Design Landscape Architecture
51 University Avenue, Suite I
Los Gatos, CA 95031

Subject: *Results of Nesting Bird Survey and Bat Habitat Assessment at 16190 Wood Acres Rd. Los Gatos, CA.*

Dear Ms. Drake,

On July 18, 2018 CRE Biologists Ranit Cohen and Patrick Kobernus conducted a nesting bird survey and bat habitat assessment at the property located at 16190 Wood Acres Rd. Los Gatos, California. The methods and results of the survey and assessment are provided below.

Nesting Bird Survey

CRE Biologists Ranit Cohen and Patrick Kobernus conducted a nesting bird survey on the property from 7:15 AM to 9:00 AM. The temperature during the survey was 65-68°F with 0 mph winds and clear skies. Conditions were suitable for detecting nesting bird activity. The property and surrounding area (300 foot buffer zone) was surveyed by walking the property and searching for any active bird nests and bird nesting activity using 8x42 binoculars. All vegetation within the property and surrounding area was surveyed for signs of nesting birds. The site is mostly forested with trees consisting of California Bay, coast live oak, and big-leaf maple. The front of the property along Wood Acres Road is dominated by invasive herbaceous and shrub species such as Himalaya blackberry, Italian thistle, periwinkle, and French broom.

No active bird nests or nesting bird activity were observed on the property or in the surrounding buffer zone. One inactive jay (California scrub jay or Steller's jay) nest was observed located in a California Bay tree, and an inactive American robin nest was also observed in a California Bay tree, however no indications of recent or current nesting activity was observed. Bird species observed as flyovers or foraging in the survey area included: American crow, lesser goldfinch, acorn woodpecker, Cooper's hawk, chestnut-backed chickadee, red-shouldered hawk, Steller's jay, California scrub jay, mourning dove, Wilson's warbler, and turkey vulture.

Bat Habitat Assessment

A bat habitat assessment was conducted on the same day, after the nesting bird survey between 9:00 AM and 10:00 AM. CRE biologists Ranit Cohen and Patrick Kobernus conducted the assessment using a high-powered flashlight and 8x42 binoculars to inspect the site and surrounding areas for potential bat habitat and signs of bat activity. Tree fissures and cavities were surveyed for bat presence and bat sign (i.e. guano, urine staining, etc.). The culvert that runs underground through the property was also inspected for bats and any sign of bats using a high powered flashlight. The survey was conducted during the bat maternity season, which is approximately April 15 to August 31.

No bats or signs of bats were observed on the property. The trees on site do not provide suitable habitat to support maternity colonies of bats due to the lack of significant sized tree cavities (most trees did not have any cavities, and the cavities that were observed were only a few inches deep which is typically not sufficient to support bats).

The culvert on site was accessible and biologists were able to see and inspect entrances and the entire length of the culvert. The creek was flowing at the time of the survey. No bats were observed, and the cool conditions in the culvert and the small size of the culvert pipe (approximately 30" diameter) likely precludes most bats from establishing a maternity colony in this location.

If you have any questions, please don't hesitate to contact me.

Ranit Cohen
Associate Biologist

1410 31st Avenue San Francisco, CA 94122
CREcology@gmail.com Phone: 415-404-6757 Fax: 415-404-6097 www.CREcology.com

DRAKE DESIGN ASSOCIATES, LLC
LANDSCAPE ARCHITECTURE STUDIO, RLA #6081
51 UNIVERSITY AVENUE, SUITE I, LOS GATOS, CA. 95030
WWW.DRAKEDESIGNASSOC.COM
408.688.7651

NEW RESIDENCE FOR:
NGUYEN RESIDENCE
16190 Wood Acres Road
Los Gatos, CA

NESTING
RAPTOR AND
BAT REPORT

DRAWN
LD
CHECKED
LD
DATE
4/30/2019
SCALE

SHEET
L- 4.4
OF – SHEETS

COUNTY OF SANTA CLARA
General Construction Specifications

GENERAL CONDITIONS

1. ALL CONSTRUCTION WORK SHALL BE PERFORMED IN ACCORDANCE WITH THE SOILS AND/OR GEOTECHNICAL REPORT PREPARED BY GEOTRINITY CONSULTANTS INC. 7770 PADRE LANE, SUITE 101, OAKLAND, CA 94621 AND DATED JUNE 7, 2019. THIS REPORT IS SUPPLEMENTED BY: 1) THESE PLANS AND SPECIFICATIONS, 2) THE COUNTY OF SANTA CLARA STANDARD DETAILS. 3) THE COUNTY OF SANTA CLARA STANDARD SPECS, 4) STATE OF CALIFORNIA STANDARD DETAILS, 5) STATE OF CALIFORNIA STANDARD SPECIFICATIONS. IN THE EVENT OF CONFLICT THE FORMER SHALL TAKE PRECEDENCE OVER THE LATTER. THE PERFORMANCE AND COMPLETION OF ALL WORK MUST BE TO THE SATISFACTION OF THE COUNTY.
2. DEVELOPER IS RESPONSIBLE FOR INSTALLATION OF THE IMPROVEMENTS SHOWN ON THESE PLANS AND HE OR HIS SUCCESSOR PROPERTY OWNERS ARE RESPONSIBLE FOR THEIR CONTINUED MAINTENANCE.
3. DEVELOPER SHALL BE RESPONSIBLE FOR CORRECTION OF ANY ERRORS OR OMISSIONS IN THESE PLANS. THE COUNTY SHALL BE AUTHORIZED TO REQUIRE DISCONTINUANCE OF ANY WORK AND SUCH CORRECTION AND MODIFICATION OF PLANS AS MAY BE NECESSARY TO COMPLY WITH COUNTY STANDARDS OR CONDITIONS OF DEVELOPMENT APPROVAL.
4. DEVELOPER SHALL OBTAIN ENCROACHMENT PERMITS FROM THE SANTA CLARA VALLEY WATER DISTRICT AND CALIFORNIA DEPARTMENT OF TRANSPORTATION WHERE NEEDED. COPIES OF THESE PERMITS SHALL BE KEPT AT THE JOB SITE FOR REVIEW BY THE COUNTY'S INSPECTOR.
5. DEVELOPER SHALL REMOVE OR TRIM ALL TREES TO PROVIDE AN UNOBSTRUCTED FIFTEEN (15) FOOT VERTICAL CLEARANCE FOR ROADWAY AREA.
6. THIS PLAN AUTHORIZES THE REMOVAL OF ONLY THOSE TREES WITH TRUNK DIAMETERS GREATER THAN 12 INCHES MEASURED 4.5 FEET ABOVE THE GROUND THAT ARE SHOWN TO BE REMOVED UNLESS AN AMENDED PLAN IS APPROVED OR A SEPARATE TREE REMOVAL PERMIT IS OBTAINED FROM THE PLANNING OFFICE. IT IS THE CONTRACTOR'S RESPONSIBILITY TO ENSURE THAT REMOVAL OF ADDITIONAL TREES HAS BEEN PERMITTED.
7. DEVELOPER SHALL PROVIDE ADEQUATE DUST CONTROL AS REQUIRED BY THE COUNTY INSPECTOR.
8. ALL PERSONS MUST COMPLY WITH SECTION 4442 OF THE PUBLIC RESOURCES CODE AND SECTION 13005 OF THE HEALTH AND SAFETY CODE RELATING TO THE USE OF SPARK ARRESTERS.
9. UPON DISCOVERING OR UNEARTHING ANY BURIAL SITE AS EVIDENCED BY HUMAN SKELETAL REMAINS OR ARTIFACTS, THE PERSON MAKING SUCH DISCOVERY SHALL IMMEDIATELY NOTIFY THE COUNTY CORONER AT (4008) 454-2520 AND LAND DEVELOPMENT ENGINEERING OFFICE AT (408) 299-5730. NO FURTHER DISTURBANCE OF THE SITE MAY BE MADE EXCEPT AS AUTHORIZED BY THE LAND DEVELOPMENT OFFICE IN ACCORD WITH PROVISIONS OF THIS ORDINANCE (COUNTY ORDINANCE CODE SECTION B6-18).
10. THESE PLANS ARE FOR THE WORK DESCRIBED IN THE SCOPE OF WORK ONLY. A SEPARATE PERMIT WILL BE REQUIRED FOR THE SEPTIC LINE CONSTRUCTION.
11. ANY DEVIATION FROM THESE APPROVED PLANS SHALL BE RE-APPROVED IN WRITING BY THE COUNTY ENGINEER PRIOR TO CONSTRUCTION.

CONSTRUCTION STAKING

1. THE DEVELOPER'S ENGINEER IS RESPONSIBLE FOR THE INITIAL PLACEMENT AND REPLACEMENT OF CONSTRUCTION GRADE STAKES. THE STAKES ARE TO BE ADEQUATELY IDENTIFIED, LOCATED, STABILIZED, ETC. FOR THE CONVENIENCE OF CONTRACTORS. LATERAL OFFSET OF STAKES SET FOR CURBS AND GUTTERS SHALL NOT EXCEED 2 1/2 FEET FROM BACK OF CURB.
2. ANY PROPERTY LINE STAKES OR ROAD MONUMENTS DISTURBED DURING CONSTRUCTION SHALL BE REPLACED BY DEVELOPER'S ENGINEER AND LICENSED LAND SURVEYOR.
3. PROPERTY LINE STAKING MUST BE PERFORMED BY THE PROJECT ENGINEER OR LAND SURVEYOR TO ESTABLISH OR RE-ESTABLISH THE PROJECT BOUNDARY AND SHALL BE INSPECTED BY THE COUNTY INSPECTOR PRIOR TO THE BEGINNING OF THE WORK.
4. PROPER CONSTRUCTION STAKES SHALL BE SET IN THE FIELD BY THE PROJECT ENGINEER OR LAND SURVEYOR AND VERIFIED BY THE COUNTY INSPECTOR PRIOR TO THE COMMENCEMENT OF GRADING.

CONSTRUCTION INSPECTION

1. CONTRACTOR SHALL NOTIFY PERMIT INSPECTION UNIT, SANTA CLARA COUNTY PRIOR TO COMMENCING WORK AND FOR FINAL INSPECTION OF WORK AND SITE.
2. THE COUNTY REQUIRES A MINIMUM OF 24 HOURS ADVANCE NOTICE FOR GENERAL INSPECTION, 48 HOURS FOR ASPHALT CONCRETE INSPECTION.
3. INSPECTION BY SANTA CLARA COUNTY SHALL BE LIMITED TO INSPECTION OF MATERIALS AND PROCESSES OF CONSTRUCTION TO OBSERVE THEIR COMPLIANCE WITH PLANS & SPECIFICATIONS BUT DOES NOT INCLUDE RESPONSIBILITY FOR THE SUPERINTENDENT OF CONSTRUCTION, SITE CONDITIONS, EQUIPMENT OR PERSONNEL. CONTRACTOR SHALL NOTIFY THE COUNTY LAND DEVELOPMENT INSPECTOR AT PHONE (408) 299-6858 AT LEAST 24 HOURS PRIOR TO COMMENCING WORK AND FOR FINAL INSPECTION OF WORK AND SITE.
4. DEVELOPER AND/OR HIS AUTHORIZED REPRESENTATIVE MUST SUBMIT WRITTEN REQUEST FOR FINAL INSPECTION AND ACCEPTANCE. SAID REQUEST SHALL BE DIRECTED TO THE INSPECTION OFFICE NOTED ON THE PERMIT FORM.
5. THE CONTRACTOR SHALL PROVIDE TO THE COUNTY CONSTRUCTION INSPECTOR WITH PAD ELEVATION & LOCATION CERTIFICATES, PREPARED BY THE PROJECT ENGINEER OR LAND SURVEYOR, PRIOR TO COMMENCEMENT OF THE BUILDING FOUNDATION.

SITE PREPARATION (CLEARING AND GRUBBING)

1. EXISTING TREES AUTHORIZED FOR REMOVAL, ROOTS, AND FOREIGN MATERIAL IN AREAS TO BE IMPROVED WILL BE REMOVED TO AN AUTHORIZED DISPOSAL SITE AS FOLLOWS:
   - A) TO A MINIMUM DEPTH OF TWO FEET BELOW THE FINISHED GRADE OF PROPOSED ROADWAYS (EITHER PRIVATE OR TO BE DEDICATED TO PUBLIC USE)
   - B) FROM AREAS AFFECTED BY THE PROPOSED GRADING EXCEPT WHERE NOTED ON THE PLANS.
2. IT SHALL BE THE RESPONSIBILITY OF THE DEVELOPER TO MOVE OR RELOCATE UTILITY POLES AND OTHER OBSTRUCTIONS IN THE WAY OF CONSTRUCTION.

UTILITY LOCATION, TRENCHING & BACKFILL

1. CONTRACTOR SHALL NOTIFY USA (UNDERGROUND SERVICE ALERT) AT 1-800-277-2600 A MINIMUM OF 24 HOURS BEFORE BEGINNING UNDERGROUND WORK FOR VERIFICATION OF THE LOCATION OF UNDERGROUND UTILITIES.
2. ACCURATE VERIFICATION AS TO SIZE, LOCATION, AND DEPTH OF EXISTING UNDERGROUND CONDUITS OR FACILITIES SHALL BE THE INDIVIDUAL CONTRACTORS RESPONSIBILITY. PLAN LOCATIONS ARE APPROXIMATE AND FOR GENERAL INFORMATION ONLY.
3. ALL UNDERGROUND INSTALLATIONS SHALL BE IN PLACE AND THE TRENCH BACKFILLED AND COMPACTED BEFORE PLACING AGGREGATE BASE MATERIAL OR SURFACE STRUCTURES. SURFACING MAY BE DONE IF THE UTILITY COMPANY CONCERNED INDICATES BY LETTER THAT IT WILL BORE. UNLESS SPECIFICALLY AUTHORIZED BY THE COUNTY, GAS AND WATER MAINS SHALL BE INSTALLED OUTSIDE THE PAVED AREAS.
4. TRENCH BACKFILL IN EXISTING PAVEMENT AREAS SHALL BE SAND MATERIAL IN ACCORDANCE WITH THE APPLICABLE PROVISIONS OF THE STATE SPECIFICATIONS. THE STRUCTURAL SECTION FOR TRENCH REPLACEMENT SHALL CONSIST OF NOT LESS THAN 12 INCHES OF APPROVED AGGREGATE BASE MATERIAL COMPACTED TO A RELATIVE COMPACTION OF AT LEAST 95% AND 4 INCHES OF HOT ASPHALT CONCRETE PLACED IN TWO LIFTS. TRENCH RESTORATION FOR HIGHER TYPE PAVEMENTS SHALL BE MADE IN KIND OR AS DIRECTED BY THE COUNTY.
5. TRENCH BACKFILL IN NEW CONSTRUCTION AREAS SHALL BE SAND MATERIAL COMPACTED TO A RELATIVE COMPACTION OF AT LEAST 90%. THE REQUIREMENT FOR SELECT MATERIAL MAY BE WAIVED BY COUNTY IF THE NATIVE SOIL IS SUITABLE FOR USE AS TRENCH BACKFILL BUT THE COMPACTION REQUIREMENTS WILL NOT BE THEREBY WAIVED.
6. BACKFILL AND TRENCH RESTORATION REQUIREMENTS SHALL APPLY AS MINIMUM STANDARDS TO ALL UNDERGROUND FACILITIES INSTALLED BY OTHER FIRMS OR PUBLIC AGENCIES.

RETAINING WALLS

1. REINFORCED CONCRETE AND CONCRETE MASONRY UNIT RETAINING WALLS SHALL HAVE FOUNDATION AND REINFORCEMENT INSPECTED BY THE COUNTY ENGINEERING INSPECTOR AND ENGINEER OF RECORD PRIOR TO POURING THE FOUNDATION AND FORMING THE WALL.
2. SEGMENTAL BLOCK RETAINING WALLS SHALL HAVE FOUNDATION AND REINFORCEMENT INSPECTED BY THE COUNTY ENGINEERING INSPECTOR.

REVISED 10/27/2015

GRADING

1. EXCAVATED MATERIAL SHALL BE PLACED IN THE FILL AREAS DESIGNATED OR SHALL BE HAULED AWAY FROM THE SITE TO A COUNTY APPROVED DISPOSAL SITE. WHERE FILL MATERIAL IS TO BE PLACED ON NATURAL GROUND, IS SHALL BE STRIPPED OF ALL VEGETATION. TO ACHIEVE A PROPER BOND WITH THE FILL MATERIAL, THE SURFACE OF THE GROUND SHALL BE SCARIFIED TO DEPTH OF 6" BEFORE FILL IS PLACED. WHERE NATURAL GROUND IS STEEPER THAN 5:1, IT SHALL BE BENCHED AND THE FILL KEYED IN TO ACHIEVE STABILITY. WHERE NEW FILL IS TO BE PLACED ON EXISTING FILL THE EXISTING FILL SHALL BE REMOVED UNTIL MATERIAL COMPACTED TO 90% RELATIVE COMPACTION IS EXPOSED. THEN THE NEW FILL MATERIAL SHALL BE PLACED AS PER THESE CONSTRUCTION NOTES. FILL MATERIAL SHALL BE PLACED IN UNIFORM LIFTS NOT EXCEEDING 6" IN UNCOMPACTED THICKNESS. BEFORE COMPACTION BEGINS, THE FILL SHALL BE BROUGHT TO A WATER CONTENT THAT WILL PERMIT PROPER COMPACTION BY EITHER 1) AERATING THE FILL IF IT IS TOO WET OR 2) MOISTENING THE FILL WITH WATER IF IT IS TOO DRY. EACH LIFT SHALL BE THOROUGHLY MIXED BEFORE COMPACTION TO ENSURE A UNIFORM DISTRIBUTION OF MOISTURE.
2. EXCESS CUT MATERIAL SHALL NOT BE SPREAD OR STOCKPILED ON THE SITE.
3. SURPLUS EARTH FILL MATERIAL SHALL BE PLACED IN A SINGLE (8" MAX) THICK LAYER COMPACTED TO WITHSTAND WEATHERING IN THE AREA(S) DELINEATED ON THE PLAN.
4. NO ORGANIC MATERIAL SHALL BE PLACED IN ANY FILL. NO TREES SHALL BE REMOVED OUTSIDE OF CUT, FILL OR ROADWAY AREAS.
5. THE UPPER 6" OF SUBGRADE BELOW DRIVEWAY ACCESS ROAD OR PARKING AREA SHALL BE COMPACTED TO 95% OF MAXIMUM DENSITY.
6. MAXIMUM CUT SLOPE SHALL BE 2 HORIZONTAL TO 1 VERTICAL. MAXIMUM FILL SLOPE SHALL BE 2 HORIZONTAL TO 1 VERTICAL.

LOCATION	CUT (C.Y.)	FILL (C.Y.)	VERT. DEPTH
RESIDENCE	414	5	9
ACCESSORY STRUCTURE	–	–	–
RET. WALL/HARDSCAPE	168	0	9
LANDSCAPING	0	145	4
DRIVEWAY	0	82	4
OFF SITE IMPROVEMENTS	–	–	–
TOTAL	582	232	26

NOTE: FILL VOLUMES INCLUDE 10% SHRINKAGE. EXCESS MATERIAL SHALL BE OFF HAULED TO A COUNTY APPROVED DUMP SITE.

7. NOTIFY SOILS ENGINEER TWO (2) DAYS PRIOR TO COMMENCEMENT OF ANY GRADING WORK TO COORDINATE THE WORK IN THE FIELD.
8. ALL MATERIALS FOR FILL SHOULD BE APPROVED BY THE SOILS ENGINEER BEFORE IT IS BROUGHT TO THE SITE.
9. THE UPPER 6" OF THE SUBGRADE SOIL SHALL BE SCARIFIED, MOISTURE CONDITIONED AND COMPACTED TO A MINIMUM RELATIVE COMPACTION OF 95%
10. ALL AGGREGATE BASE MATERIAL SHALL BE COMPACTED TO A MINIMUM 95% RELATIVE COMPACTION.
11. THE GEOTECHNICAL PLAN REVIEW LETTER MUST BE REVIEWED AND APPROVED BY THE COUNTY GEOLOGIST PRIOR TO FINAL APPROVAL BY THE COUNTY ENGINEER FOR BUILDING OCCUPANCY.
12. THE PROJECT GEOTECHNICAL ENGINEER SHALL PERFORM COMPACTION TESTING AND PROVIDE THE RESULTS TO THE COUNTY ENGINEERING INSPECTOR PRIOR TO THE CONSTRUCTION OF ANY PAVED AREA.
13. GRADING WORK BETWEEN OCTOBER 15TH AND APRIL 15TH IS AT THE DISCRETION OF THE SANTA CLARA COUNTY GRADING OFFICIAL.
14. TOTAL DISTURBED AREA FOR THE PROJECT: 9,086 SF.
15. WDID NO._____.
16. THE INSPECTOR MAY VERIFY THAT A VALID NOTICE OF INTENT (NOI) HAS BEEN ISSUED BY THE STATE AND THAT A CURRENT AND UP TO DATE STORM WATER POLLUTION PREVENTION PLAN (SWPPP) IS AVAILABLE ON SITE.

TREE PROTECTION

1. FOR ALL TREES TO BE RETAINED WITH A CANOPY IN THE DEVELOPMENT AREA OR INTERFACES WITH THE LIMITS OF GRADING FOR ALL PROPOSED DEVELOPMENT ON SITE, THE TREES SHALL BE PROTECTED BY THE PLACEMENT OF RIGID TREE PROTECTIVE FENCING, CONSISTENT WITH THE COUNTY INTEGRATED LANDSCAPE GUIDELINES, AND INCLUDE THE FOLLOWING:
   - A. FENCING SHOULD BE PLACED ALONG THE OUTSIDE EDGE OF THE DRIPLINE OF THE TREE OR GROVE OF TREES.
   - B. THE FENCING SHALL BE MAINTAINED THROUGHOUT THE SITE CONSTRUCTION PERIOD AND SHALL BE INSPECTED PERIODICALLY FOR DAMAGE AND PROPER FUNCTION.
   - C. FENCING SHALL BE REPAIRED, AS NECESSARY, TO PROVIDE A PHYSICAL BARRIER FROM CONSTRUCTION ACTIVITIES.
   - D. SIGNAGE STATING, "WARNING- THIS FENCING SHALL NOT BE REMOVED WITHOUT PERMISSION FROM THE SANTA CLARA COUNTY PLANNING OFFICE (408) 299-5770. COUNTY OF SANTA CLARA TREE PROTECTION MEASURES MAY BE FOUND AT http://www.sccplanning.gov." SHALL BE PLACED ON THE TREE PROTECTIVE FENCING UNTIL FINAL OCCUPANCY.
2. PRIOR TO COMMENCEMENT OF ANY CONSTRUCTION ACTIVITY, TREE PROTECTIVE FENCING SHALL BE SECURELY IN PLACED AND INSPECTED BY THE LAND DEVELOPMENT ENGINEERING INSPECTOR.
3. SEE EXISTING TREE PROTECTION DETAILS FOR MORE INFORMATION.

ACCESS ROADS AND DRIVEWAYS

1. DRIVEWAY LOCATIONS SHALL BE AS SHOWN ON THE IMPROVEMENT PLANS WITH CENTERLINE STATIONING. THE MINIMUM CONCRETE THICKNESS SHALL BE 6 INCHES THROUGHOUT (WITH A MAXIMUM APPROACH SLOPE OF 1 1/4 INCHES PER FOOT).
2. ALL DRIVEWAY OR COMMON ACCESS ROAD SECTIONS IN EXCESS OF 15 LONGITUDINAL SLOPE MUST BE PAVED WITH A MINIMUM 2-INCH ASPHALT LIFT OR FULL DEPTH CONCRETE LIFT PRIOR TO ANY COMBUSTIBLE FRAMING.
3. THE OWNER AND PRIME CONTRACTOR ARE RESPONSIBLE FOR MAINTAINING PROJECT SITE ACCESS AND NEIGHBORHOOD ACCESS FOR EMERGENCY VEHICLES AND LOCAL RESIDENTS.
4. ROADWAYS DESIGNATED AS NOT COUNTY MAINTAINED ROADS AS SHOWN ON THE PLAN WILL NOT BE ELIGIBLE FOR COUNTY MAINTENANCE UNTIL THE ROADWAYS ARE IMPROVED (AT NO COST TO THE COUNTY) TO THE PUBLIC MAINTENANCE ROAD STANDARDS APPROVED BY THE BOARD OF SUPERVISORS AND IN EFFECT AT SUCH TIME THAT THE ROADWAYS ARE CONSIDERED FOR ACCEPTANCE INTO THE COUNTY'S ROAD SYSTEM.
5. ALL WORK IN THE COUNTY ROAD RIGHT-OF-WAY REQUIRES AN ENCROACHMENT PERMIT FROM THE ROADS AND AIRPORTS DEPARTMENT. EACH INDIVIDUAL ACTIVITY REQUIRES A SEPARATE PERMIT – I.E. CABLE, ELECTRICAL, GAS, SEWER, WATER, RETAINING WALLS, DRIVEWAY APPROACHES, FENCES, LANDSCAPING, TREE REMOVAL, STORM DRAINAGE IMPROVEMENTS, ETC..

STREET LIGHTING

1. PACIFIC GAS & ELECTRIC ELECTROLIER SERVICE FEE SHALL BE PAID BY THE DEVELOPER AND/OR HIS AUTHORIZED REPRESENTATIVE.

SANITARY SEWER

1. THE SANITARY SEWER AND WATER UTILITIES SHOWN ON THESE PLANS ARE NOT PART OF THIS GRADING PERMIT AND ARE SHOWN FOR REFERENCE ONLY.
2. ALL MATERIALS AND METHODS OF CONSTRUCTION OF SANITARY SEWERS SHALL CONFORM TO THE SPECIFICATIONS OF THE JURISDICTION INVOLVED. INSPECTION OF SANITARY SEWER WORK SHALL BE DONE BY SAID JURISDICTION.

PORTLAND CEMENT CONCRETE

1. CONCRETE USED FOR STRUCTURAL PURPOSES SHALL BE CLASS "A" (6 SACK PER CUBIC YARD) AS SPECIFIED IN THE STATE STANDARD SPECIFICATIONS. CONCRETE PLACED MUST DEVELOP A MINIMUM STRENGTH FACTOR OF 2800 PSI IN A SEVEN-DAY PERIOD. THE CONCRETE MIX DESIGN SHALL BE UNDER THE CONTINUAL CONTROL OF THE COUNTY INSPECTOR.

AIR QUALITY, LANDSCAPING AND EROSION CONTROL

1. WATER ALL ACTIVE CONSTRUCTION AREAS AT LEAST TWICE DAILY.
2. COVER ALL TRUCKS HAULING SOIL, SAND, AND OTHER LOOSE MATERIALS OR REQUIRE ALL TRUCKS TO MAINTAIN AT LEAST TWO FEET OF FREEBOARD.
3. PAVE, APPLY WATER THREE TIMES DAILY, OR APPLY (NON-TOXIC) SOIL STABILIZERS ON ALL UNPAVED ACCESS ROADS, PARKING AREAS AND STAGING AREAS AT CONSTRUCTION SITES.
4. SWEEP DAILY (WITH WATER SWEEPERS) ALL PAVED ACCESS ROADS, PARKING AREAS AND STAGING AREAS AT CONSTRUCTION SITES. THE USE OF DRY POWDER SWEEPING IS PROHIBITED.
5. SWEEP STREETS DAILY (WITH WATER SWEEPERS) IF VISIBLE SOIL MATERIAL IS CARRIED ONTO ADJACENT PUBLIC STREETS. THE USE OF DRY POWDER SWEEPING IS PROHIBITED.
6. ALL CONSTRUCTION VEHICLES, EQUIPMENT AND DELIVERY TRUCKS SHALL HAVE A MAXIMUM IDLING TIME OF 5 MINUTES (AS REQUIRED BY THE CALIFORNIA AIRBORNE TOXIC CONTROL MEASURE TITLE 13, SECTION 2485 OF CALIFORNIA CODE OF REGULATIONS (CCR)). ENGINES SHALL BE SHUT OFF IF CONSTRUCTION REQUIRES LONGER IDLING TIME UNLESS NECESSARY FOR PROPER OPERATION OF THE VEHICLE.
7. ALL VEHICLE SPEEDS ON UNPAVED ROADS SHALL BE LIMITED TO 15 MILES PER HOUR.
8. ALL CONSTRUCTION EQUIPMENT SHALL BE MAINTAINED AND PROPERLY TUNED IN ACCORDANCE WITH MANUFACTURER'S SPECIFICATIONS. ALL EQUIPMENT SHALL BE CHECKED BY A CERTIFIED MECHANIC AND DETERMINED TO BE RUNNING IN PROPER CONDITION PRIOR TO OPERATION.
9. POST A SIGN THAT IS AT LEAST 32 SQUARE FEET MINIMUM 2 INCHES LETTER HEIGHT VISIBLE NEAR THE ENTRANCE OF CONSTRUCTION SITE THAT IDENTIFIES THE FOLLOWING REQUIREMENTS. OBTAIN ENCROACHMENT PERMIT FOR SIGN FROM ROADS DEPARTMENT OR OTHER APPLICABLE AGENCY IF REQUIRED.
   - A. 15 MILES PER HOUR (MPH) SPEED LIMIT
   - B. 5 MINUTES MAXIMUM IDLING TIME OF VEHICLES
   - C. TELEPHONE NUMBER TO CONTACT THE BAY AREA AIR QUALITY MANAGEMENT DISTRICT REGARDING DUST COMPLAINTS. NOTE PHONE NUMBER OF THE BAY AREA AIR QUALITY MANAGEMENT DISTRICT AIR POLLUTION COMPLAIN HOTLINE OF 1-800-334-6367.
10. ALL FILL SLOPES SHALL BE COMPACTED AND LEFT IN A SMOOTH AND FIRM CONDITION CAPABLE OF WITHSTANDING WEATHERING.
11. ALL EXPOSED DISTURBED AREAS SHALL BE SEEDED WITH BROME SEED SPREAD AT THE RATE OF 5 LB. PER 1000 SQUARE FEET (OR APPROVED EQUAL). SEEDING AND WATERING SHALL BE MAINTAINED AS REQUIRED TO ENSURE GROWTH.
12. ALL DITCHES SHALL BE LINED PER COUNTY STANDARD SD8.
13. ALL STORM DRAINAGE STRUCTURES SHALL BE INSTALLED WITH EFFECTIVE ENTROPY & OUTFALL EROSION CONTROLS E.G. SACKED CONCRETE RIP-RAP. ENERGY DISSIPATERS SHALL BE INSTALLED AT ALL DITCH OUTFALLS. WHERE OUTFALLS ARE NOT INTO AN EXISTING CREEK OR WATER COURSE, RUNOFF SHALL BE RELEASED TO SHEET FLOW.
14. PRIOR TO GRADING COMPLETION AND RELEASE OF THE BOND, ALL GRADED AREAS SHALL BE RESEEDED IN CONFORMANCE WITH THE COUNTY GRADING ORDINANCE TO MINIMIZE THE VISUAL IMPACTS OF THE GRADE SLOPES AND REDUCE THE POTENTIAL FOR EROSION OF THE SUBJECT SITE.
15. PERMANENT LANDSCAPING SHOWN ON THE ATTACHED LANDSCAPE PLAN MUST BE INSTALLED AND FIELD APPROVED BY THE COUNTY PLANNING OFFICE PRIOR TO FINAL APPROVAL BY THE COUNTY ENGINEER, AND FINAL OCCUPANCY RELEASE BY THE BUILDING INSPECTION OFFICE.
16. THE OWNER SHALL PREPARE AND PRESENT A WINTERIZATION REPORT TO THE COUNTY INSPECTOR FOR REVIEW PRIOR TO OCTOBER 15TH OF EVERY YEAR.
17. THE OWNER, CONTRACTOR, AND ANY PERSON PERFORMING CONSTRUCTION ACTIVITIES SHALL INSTALL AND MAINTAIN CONSTRUCTION BEST MANAGEMENT PRACTICES (BMPS) ON THE PROJECT SITE AND WITHIN THE SANTA CLARA COUNTY ROAD RIGHT-OF-WAY THROUGHOUT THE DURATION OF THE CONSTRUCTION AND UNTIL THE ESTABLISHMENT OF PERMANENT STABILIZATION AND SEDIMENT CONTROL TO PREVENT THE DISCHARGE OF POLLUTANTS INCLUDING SEDIMENT, CONSTRUCTION MATERIALS, EXCAVATED MATERIALS, AND WASTE INTO THE SANTA CLARA COUNTY RIGHT-OF-WAY, STORM SEWER WATERWAYS, ROADWAY INFRASTRUCTURE. BMPS SHALL INCLUDE, BUT NOT BE LIMITED TO THE FOLLOWING;
   - A. PREVENTION OF POLLUTANTS IN STORM WATER DISCHARGES FROM THE CONSTRUCTION SITE AND THE CONTRACTOR'S MATERIAL AND EQUIPMENT LAYDOWN / STAGING AREAS.
   - B. PREVENTION OF TRACKING OF MUD, DIRT, AND CONSTRUCTION MATERIALS ONTO THE PUBLIC ROAD RIGHT-OF-WAY.
   - C. PREVENTION OF DISCHARGE OF WATER RUN-OFF DURING DRY AND WET WEATHER CONDITIONS ONTO THE PUBLIC ROAD RIGHT-OF-WAY.
18. THE OWNER, CONTRACTOR, AND ANY PERSON PERFORMING CONSTRUCTION ACTIVITIES SHALL ENSURE THAT ALL TEMPORARY CONSTRUCTION FACILITIES, INCLUDING BUT NOT LIMITED TO CONSTRUCTION MATERIALS, DELIVERIES, HAZARDOUS AND NON-HAZARDOUS MATERIAL STORAGE, EQUIPMENT, TOOLS, PORTABLE TOILETS, CONCRETE WASHOUT, GARBAGE CONTAINERS, LAYDOWN YARDS, SECONDARY CONTAINMENT AREAS, ETC. ARE LOCATED OUTSIDE THE SANTA CLARA COUNTY ROAD RIGHT-OF-WAY.
19. EROSION CONTROL PLAN IS A GUIDE AND SHALL BE AMENDED AS NECESSARY TO PREVENT EROSION AND ILLICIT DISCHARGES ON A YEAR AROUND BASIS, DEPENDING ON THE SEASON, WEATHER, AND FIELD CONDITIONS. EROSION CONTROL MEASURES IN ADDITION TO THOSE NOTED IN THE PERMITTED PLANS MAY BE NECESSARY. FAILURE TO INSTALL SITE SITE AND SITUATIONALY APPROPRIATE EROSION CONTROL MEASURES MAY RESULT IN VIOLATIONS, FINES, AND A STOPPAGE OF WORK.

STORM DRAINAGE AND STORMWATER MANAGEMENT

1. DEVELOPER IS RESPONSIBLE FOR ALL NECESSARY DRAINAGE FACILITIES WHETHER SHOWN ON THE PLANS OR NOT AND HE OR HIS SUCCESSOR PROPERTY OWNERS ARE RESPONSIBLE FOR THE ADEQUACY AND CONTINUED MAINTENANCE OF THESE FACILITIES IN A MANNER WHICH WILL PRECLUDE ANY HAZARD TO LIFE, HEALTH, OR DAMAGE TO ADJOINING PROPERTY, CONSISTENT WITH NPDES PERMIT CAS612008 / ORDER NO. R2-2009-0047 AND NPDES PERMIT CAS000004/ ORDER NO. 2013-0001-DWQ.
2. DROP INLETS SHALL BE COUNTY STANDARD TYPE 5 UNLESS OTHERWISE NOTED ON THE PLANS. THE DEVELOPER'S ENGINEER SHALL BE RESPONSIBLE FOR THE PROPER LOCATION OF DROP INLETS. WHERE STREET PROFILE GRADE EXCEEDS 6% DROP INLETS SHALL BE SET AT 500 ANGLE CURB LINE TO ACCEPT WATER OR AS SHOWN ON THE PLANS.
3. WHERE CULVERTS ARE INSTALLED THE DEVELOPER SHALL BE RESPONSIBLE FOR GRADING THE OUTLET DITCH TO DRAIN TO AN EXISTING SWALE OR TO AN OPEN AREA FOR SHEET FLOW.
4. UPON INSTALLATION OF DRIVEWAY CONNECTIONS, PROPERTY OWNERS SHALL PROVIDE FOR THE UNINTERRUPTED FLOW OF WATER IN ROADSIDE DITCHES.
5. THE COUNTY SHALL INSPECT UNDERGROUND DRAINAGE IMPROVEMENTS AND STORMWATER MANAGEMENT FEATURES PRIOR TO BACKFILL.

AS-BUILT PLANS STATEMENT

THIS IS A TRUE COPY OF THE AS-BUILT PLANS. THERE (___ WERE) (___ WERE NOT) MINOR FIELD CHANGES – MARKED WITH THE SYMBOL (^). THERE (___WERE) (___ WERE NOT) PLAN REVISIONS INDICATING SIGNIFICANT CHANGES REVIEWED BY THE COUNTY ENGINEER AND MARKED WITH THE SYMBOL Δ.

DATE _____ SIGNATURE _____

NOTE: THIS STATEMENT IS TO BE SIGNED BY THE PERSON AUTHORIZED BY THE COUNTY ENGINEER TO PERFORM THE INSPECTION WORK. A REPRODUCIBLE COPYOF THE AS-BUILT PLANS MUST BE FURNISHED TO THE COUNTY ENGINEER AFTERCONSTRUCTION.

GEOTECHNICAL ENGINEER OBSERVATION

1. A CONSTRUCTION OBSERVATION LETTER FROM THE RESPONSIBLE GEOTECHNICAL ENGINEER AND ENGINEERING GEOLOGIST DETAILING CONSTRUCTION OBSERVATIONS AND CERTIFYING THAT THE WORK WAS DONE IN ACCORDANCE WITH THE RECOMMENDATIONS IN THE GEOTECHNICAL AND GEOLOGIC REPORTS SHALL BE SUBMITTED PRIOR TO THE GRADING COMPLETION AND RELEASE OF THE BOND.

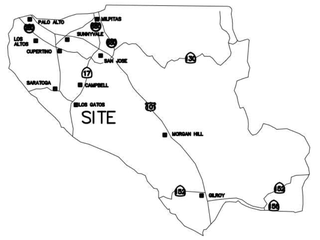

COUNTY LOCATION MAP



VICINITY MAP

SURVEY MONUMENT PRESERVATION

1. THE LANDOWNER / CONTRACTOR MUST PROTECT AND ENSURE THE PERPETUATION OF SURVEY MONUMENTS AFFECTED BY CONSTRUCTION ACTIVITIES.
2. PRIOR TO THE START OF CONSTRUCTION, THE CONTRACTOR SHALL LOCATE, STAKE, AND FLAG OR OTHERWISE IDENTIFY WITH PAINT OR OTHER MARKINGS ALL PERMANENT SURVEY MONUMENTS OF RECORD AND ANY UNRECORDED MONUMENTS THAT ARE DISCOVERED THAT ARE WITHIN 50 FEET OF THE CONSTRUCTION ACTIVITY.
3. THE LANDOWNER, CONTRACTOR AND/OR ANY PERSON PERFORMING CONSTRUCTION ACTIVITIES THAT WILL OR MAY DISTURB AN EXISTING MONUMENT, CORNER STAKE, OR ANY OTHER PERMANENT SURVEYED MONUMENT SHALL CAUSE TO HAVE A LICENSED LAND SURVEYOR OR CIVIL ENGINEER, AUTHORIZED TO PRACTICE SURVEYING, ENSURE THAT A CORNER RECORD AND/OR RECORD OF SURVEY ARE FILED WITH THE COUNTY SURVEYOR'S OFFICE PRIOR TO DISTURBING SAID MONUMENTS AND RESET PERMANENT MONUMENT(S) IN THE SURFACE OF THE NEW CONSTRUCTION OR SET A WITNESS MONUMENT(S) TO PERPETUATE THE LOCATION IF ANY PERMANENT MONUMENT COULD BE DESTROYED, DAMAGED, COVERED, DISTURBED, OR OTHERWISE OBLITERATED. THE LICENSED LAND SURVEYOR OR CIVIL ENGINEER SHALL FILE A CORNER RECORD OR RECORD OF SURVEY WITH COUNTY SURVEYOR PRIOR TO FINAL ACCEPTANCE OF THE PROJECT BY THE LAND DEVELOPMENT ENGINEERING INSPECTOR.

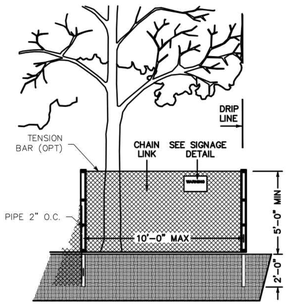

EXISTING TREE PROTECTION DETAILS

1. PRIOR TO THE COMMENCEMENT OF ANY GRADING, TREE PROTECTIVE FENCING SHALL BE IN PLACE IN ACCORDANCE WITH THE TREE PRESERVATION PLAN AND INSPECTED BY A CERTIFIED ARBORIST. THE ARBORIST SHALL MONITOR CONSTRUCTION ACTIVITY TO ENSURE THAT THE TREE PROTECTION MEASURES ARE IMPLEMENTED AND ADHERED TO DURING CONSTRUCTION. THIS CONDITION SHALL BE INCORPORATED INTO THE GRADING PLANS.
2. FENCE SHALL BE MINIMUM 5 FEET TALL CONSTRUCTED OF STURDY MATERIAL (CHAIN-LINK OR EQUIVALENT STRENGTH/ DURABILITY).
3. FENCE SHALL BE SUPPORTED BY VERTICAL POSTS DRIVEN 2 FEET (MIN) INTO THE GROUND AND SPACED NOT MORE THAN 10 FEET APART.
4. TREE FENCING SHALL BE MAINTAINED THROUGHOUT THE SITE DURING THE CONSTRUCTION PERIOD. INSPECTED PERIODICALLY FOR DAMAGE AND PROPER FUNCTION, REPAIRED AS NECESSARY T

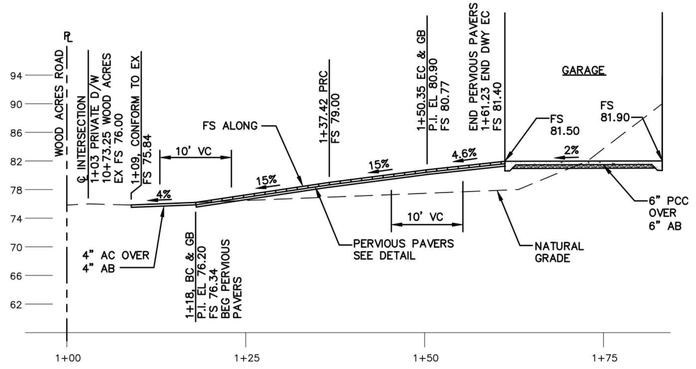

PRIVATE DRIVE PROFILE

SCALE: HORIZ=1"=10'
VERT =1"=4'

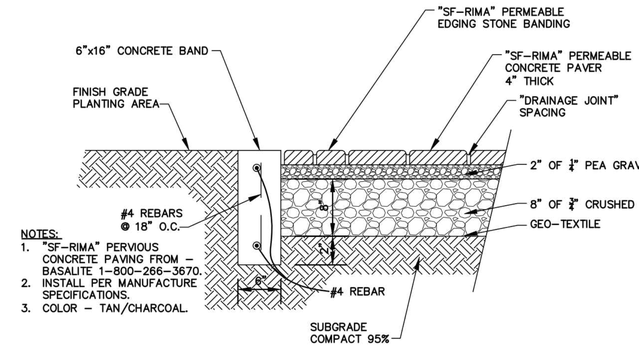

PERVIOUS CONCRETE PAVER DETAIL

NTS

NOTE

PURSUANT TO THE 2015 MRP FOR STORM WATER QUALITY ISSUED BY THE SAN FRANCISCO BAY REGIONAL WATER QUALITY CONTROL BOARD, PLEASE DEMONSTRATE THAT NO MORE THAN 5,000 SQUARE FEET OF THE PROPOSED DISTURBANCE WILL BE LOCATED IN AREAS EXCEEDING 25% AVERAGE SLOPE, WHERE MONTHLY INSPECTION OF THE STORMWATER QUALITY IMPROVEMENTS WOULD BE REQUIRED. IF THE 5,000 SQUARE FOOT THRESHOLD IS EXCEEDED, PLEASE ADD THE FOLLOWING NOTE:

HIGH PRIORITY SITE – MONTHLY INSPECTION OF STORMWATER QUALITY IMPROVEMENTS ARE REQUIRED PURSUANT TO THE 2015 MRP FOR STORM WATER QUALITY ISSUED BY THE SAN FRANCISCO BAY REGIONAL WATER QUALITY CONTROL BOARD.

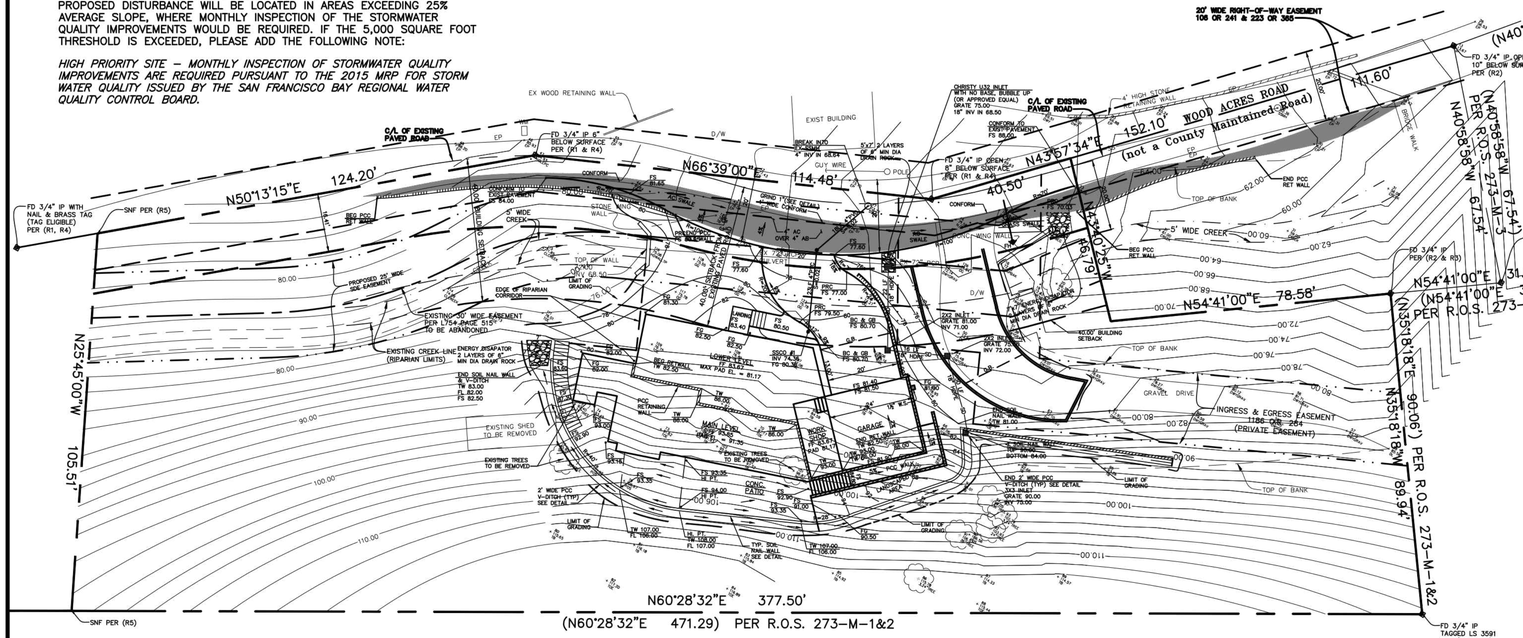
20' WIDE RIGHT-OF-WAY EASEMENT
106 OR 241 & 223 OR 365
(N40°11'10"E 115.01') PER R.O.S. 273-M-1&2
N40°11'10"E 115.01'
FD 3/4" IP OPEN
10" BELOW SURFACE
PER (R2)
FD 3/4" IP 4" BELOW
SURFACE TAGGED LS 5324
PER (R1, R2 & R3)
N30°52'11"E 146.00'
(N30°52'11"E 146.00') PER R.O.S. 273-M-1&2
BASIS OF BEARING
FD 3/4" IP 6" BELOW
SURFACE TAGGED LS 5324
PER (R1, R2 & R3)
O/A OF EXISTING
PAVED ROAD
WOOD ACRES ROAD
(not a County Maintained Road)
N43°57'34"E
152.10'
111.60'
N40°58'58"W
67.54'
(N40°58'58"W 67.54')
PER R.O.S. 273-M-3
FD 3/4" IP
TAGGED LS 3591
PER (R2 & R3)
N54°41'00"E 31.12'
(N54°41'00"E 31.05')
PER R.O.S. 273-M-1&2
N54°41'00"E 78.58'
N35°18'18"E 90.06')
PER R.O.S. 273-M-1&2
89.94'
N66°39'00"E
114.48'
40.50'
N50°13'15"E
124.20'
FD 3/4" IP WITH
NAIL & BRASS TAG
(TAG ILLEGIBLE)
PER (R1, R4)
SNF PER (R5)
N25°45'00"W
105.51'
N60°28'32"E 377.50'
(N60°28'32"E 471.29) PER R.O.S. 273-M-1&2
FD 3/4" IP
TAGGED LS 3591
PER (R2 & R3)
EX WOOD RETAINING WALL
EXIST BUILDING
CHRISTY U32 INLET
WITH NO BASE, BUBBLE UP
(OR APPROVED EQUAL)
GRATE 75.00
18" INV IN 68.50
CONCRETE TO
ENCASE PIPE
FS 69.00
5'x3'x3 LAYERS
OF 6" MIN DIA
DOWN RIP-RAP
4" INV IN 68.25
GUY WIRE
POLE
4" HIGH STEP
CONCRETE
RETAINING WALL
BRICK WALK
5' WIDE CREEK
STONE WALL
EDGE OF RIPARIAN
CORRIDOR
EXISTING 20' WIDE EASEMENT
FOR 12"ø PIPE 515.7'
TO BE ABANDONED
EXISTING CREEK-LINE
(RIPARIAN LIMITS)
ENERGY DISSIPATOR
3 LAYERS OF 6"
MIN DIA DRAIN ROCK
END SOIL NAIL WALL
& V-DITCH
TW 83.00
FL 82.00
FS 82.50
EXISTING SHED
TO BE REMOVED
EXISTING TREES
TO BE REMOVED
2' WIDE PCC
V-DITCH (TYP)
SEE DETAIL
LIMIT OF
GRADING
PCC
RETAINING
WALL
MAX WALL
HT 10.00'
MAX PAD EL = 81.17
LOWER 4" ø
INV 90.36
SOIL NAIL WALL
TW 90.50
FL 89.50
FS 89.50
FS 90.00
FS 90.50
FS 91.00
FS 91.50
FS 92.00
FS 92.50
FS 93.00
FS 93.50
FS 94.00
FS 94.50
FS 95.00
FS 95.50
FS 96.00
FS 96.50
FS 97.00
FS 97.50
FS 98.00
FS 98.50
FS 99.00
FS

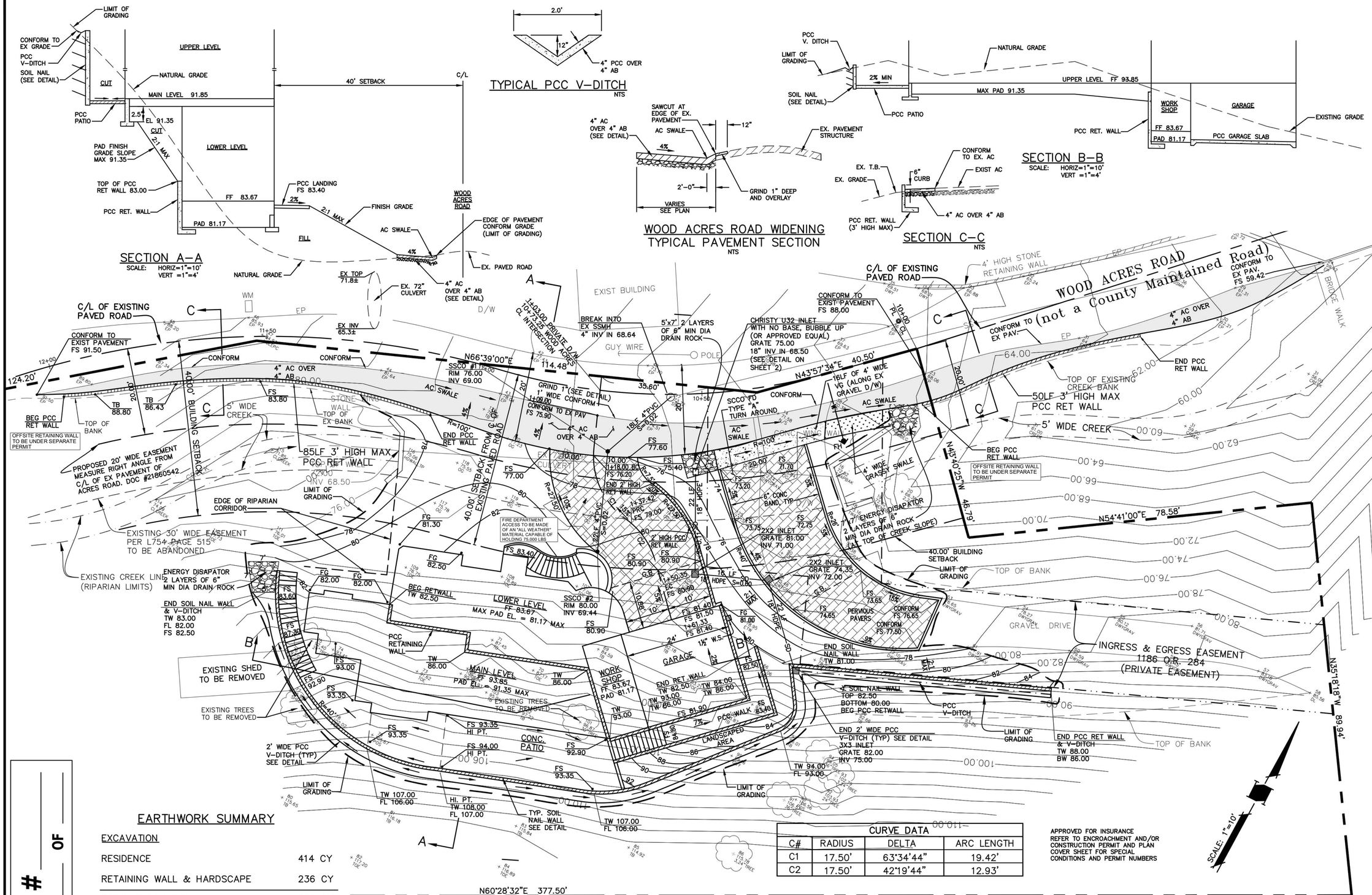
SECTION A–A
SCALE: HORIZ=1"=10'
VERT =1"=4'
TYPICAL PCC V–DITCH
NTS
WOOD ACRES ROAD WIDENING
TYPICAL PAVEMENT SECTION
NTS
SECTION B–B
SCALE: HORIZ=1"=10'
VERT =1"=4'
SECTION C–C
NTS
WOOD ACRES ROAD (not a County Maintained Road)
CONFORM TO EX PAV. FS 59.42
C/L OF EXISTING PAVED ROAD
CONFORM TO EXIST PAVEMENT FS 91.50
CONFORM TO EXIST PAVEMENT FS 88.00
CONFORM TO EX PAV.
4" AC OVER 4" AB
BEG PCC RET WALL
END PCC RET WALL
TOP OF BANK
TOP OF EX. BANK
5' WIDE CREEK
STONE WALL
50LF 3' HIGH MAX PCC RET WALL
85LF 3' HIGH MAX PCC RET WALL
OFFSITE RETAINING WALL TO BE UNDER SEPARATE PERMIT
PROPOSED 20' WIDE EASEMENT MEASURE RIGHT ANGLE FROM C/L OF EX PAVEMENT OF ACRES ROAD. DOC #21860542
40.00' BUILDING SETBACK
EXISTING 30' WIDE EASEMENT PER L754 PAGE 515 TO BE ABANDONED
EXISTING CREEK LINE (RIPARIAN LIMITS)
EDGE OF RIPARIAN CORRIDOR
LIMIT OF GRADING
ENERGY DISAPATOR 2 LAYERS OF 6" MIN DIA DRAIN ROCK
END SOIL NAIL WALL & V-DITCH TW 83.00 FL 82.00 FS 82.50
EXISTING SHED TO BE REMOVED
EXISTING TREES TO BE REMOVED
2' WIDE PCC V-DITCH (TYP) SEE DETAIL
PCC RETAINING WALL
BEG RETWALL TW 82.50
LOWER LEVEL FF 83.67 MAX PAD EL. = 81.17 MAX
MAIN LEVEL FF 93.85 PAD EL. = 91.35 MAX
WORK SHOP PAD 81.67
GARAGE
CONC. PATIO
LANDSCAPED AREA
PCC WALK
END RET WALL TW 82.50 TW 84.00 TW 86.00
END 2' HIGH RET WALL
2' HIGH PCC RET WALL
END SOIL NAIL WALL TW 81.00
3' SOIL NAIL WALL TOP 82.50 BOTTOM 80.00 BEG PCC RETWALL
END 2' WIDE PCC V-DITCH (TYP) SEE DETAIL 3X3 INLET GRATE 82.00 INV 75.00
TW 94.00 FL 93.00
PCC V-DITCH
END PCC RET WALL & V-DITCH TW 88.00 BW 86.00
LIMIT OF GRADING
TYP. SOIL NAIL WALL SEE DETAIL
TW 107.00 FL 106.00
HI. PT. TW 108.00 FL 107.00
FIRE DEPARTMENT ACCESS TO BE MADE OF AN "ALL WEATHER" MATERIAL CAPABLE OF HOLDING 75,000 LBS
SSCO #1 RIM 76.00 INV 69.00
SSCO #2 RIM 80.00 INV 69.44
BREAK INTO EX SSMH 4" INV IN 68.64
GUY WIRE
POLE
EXIST BUILDING
WM
EP
D/W
EX INV 65.3±
EX TOP 71.8±
EX. 72" CULVERT
EX. PAVED ROAD
NATURAL GRADE
FINISH GRADE
AC SWALE
PCC LANDING FS 83.40
WOOD ACRES ROAD
EDGE OF PAVEMENT CONFORM GRADE (LIMIT OF GRADING)
PAD FINISH GRADE SLOPE MAX 91.35
TOP OF PCC RET WALL 83.00
PCC RET. WALL
PCC PATIO
SOIL NAIL (SEE DETAIL)
CONFORM TO EX GRADE
PCC V-DITCH
UPPER LEVEL
LOWER LEVEL
MAIN LEVEL 91.85
EL 91.35
CUT
FILL
2:1 MAX
2%
4%
40' SETBACK
C/L
2.0'
12"
4" PCC OVER 4" AB
SAWCUT AT EDGE OF EX. PAVEMENT
AC SWALE
4" AC OVER 4" AB (SEE DETAIL)
EX. PAVEMENT STRUCTURE
2'–0"
VARIES SEE PLAN
GRIND 1" DEEP AND OVERLAY
PCC V. DITCH
LIMIT OF GRADING
SOIL NAIL (SEE DETAIL)
2% MIN
MAX PAD 91.35
UPPER LEVEL FF 93.85
WORK SHOP
GARAGE
FF 83.67
PAD 81.17
PCC GARAGE SLAB
EXISTING GRADE
EX. T.B.
EX. GRADE
6" CURB
CONFORM TO EX. AC
EXIST AC
4" AC OVER 4" AB
PCC RET. WALL (3' HIGH MAX)
4' HIGH STONE RETAINING WALL
BRIDGE WALK
64.00
62.00
60.00
N66°39'00"E 114.48'
N43°57'34"E 40.50'
N54°41'00"E 78.58'
N47°40'25"W 46.76'
N35°18'18"W 89.94'
N60°28'32"E 377.50'
1+03.00 PRIVATE D/W
10+73.22 WOOD ACRES CL INTERSECTION
10+50
11+50
12+00
1+18.00 BC
1+37.42 EC
1+50.35
1+61.33
1+81.40
1+90.00
2+00.00
2+10.00
2+20.00
2+30.00
2+40.00
2+50.00
2+60.00
2+70.00
2+80.00
2+90.00
3+00.00
3+10.00
3+20.00
3+30.00
3+40.00
3+50.00
3+60.00
3+70.00
3+80.00
3+90.00
4+00.00
4+10.00
4+20.00
4+30.00
4+40.00
4+50.00
4+60.00
4+70.00
4+80.00
4+90.00
5+00.00
5+10.00
5+20.00
5+30.00
5+40.00
5+50.00
5+60.00
5+70.00
5+80.00

NOTE:

1. WORKING HOURS 9AM TO 5PM.
2. ALL CONSTRUCTION AREA SIGNS SHOULD BE ON COLLAPSIBLE STANDS.
3. ALL FLAGGERS TO HAVE TWO WAY RADIO COMMUNICATIONS.

CONSTRUCTION AREA SIGN		
SIGN CODE	PANEL SIZE	SIGN MESSAGE
W20-1	24"x24"	ROAD WORK AHEAD
C9A	36"x36"	FLAGGER SIGN
W3-4	24"x24"	BE PREPARED TO STOP
W16-1P	18"x24"	SHARE THE ROAD

LEGENDS:

- CONE
- DIRECTION OF TRAVEL
- SIGN
- FLAGGER

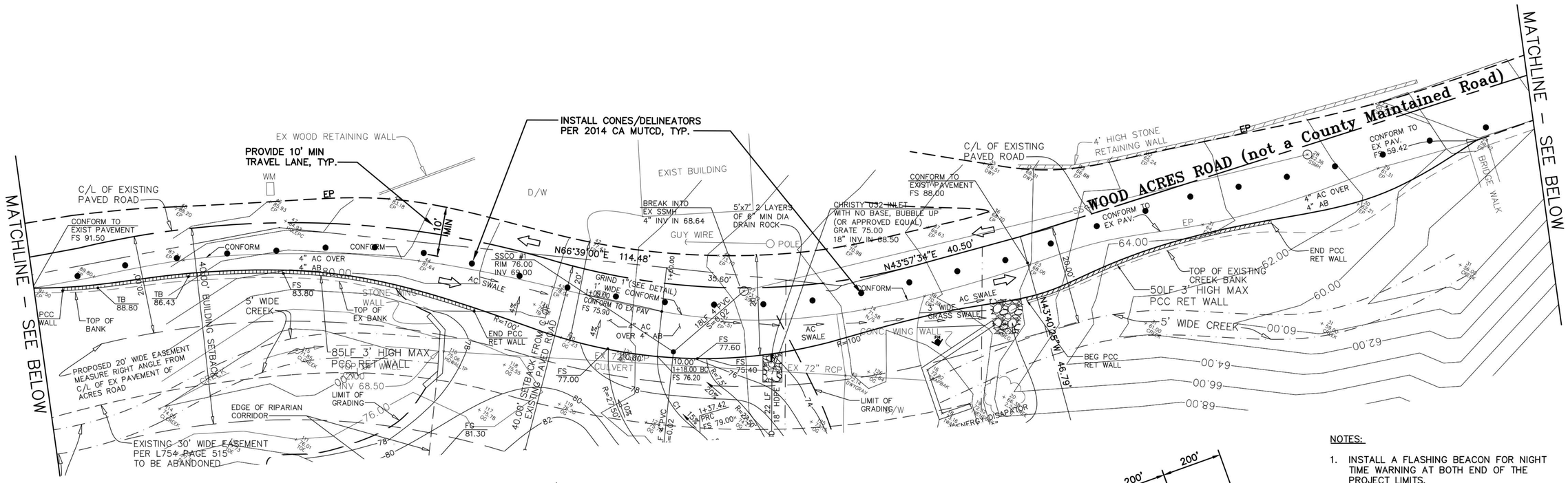

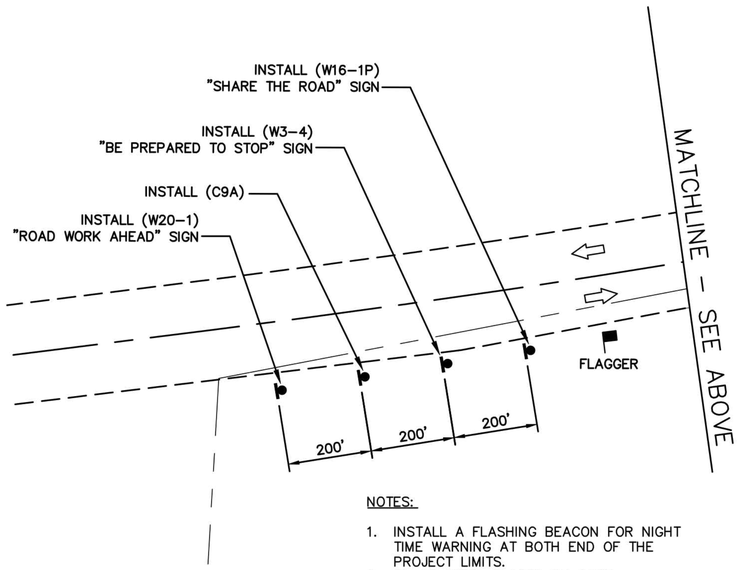

NOTES:

1. INSTALL A FLASHING BEACON FOR NIGHT TIME WARNING AT BOTH END OF THE PROJECT LIMITS.
2. PLACE STEEL PLATES ON OPEN TRENCHES OR DIG-OUT DEEPER THAN 2 INCHES. PLACE COLD ASPHALT TO RAMP UP TO 2 INCHES DIG-OUT EDGES TO HAVE A BETTER TRANSITION.

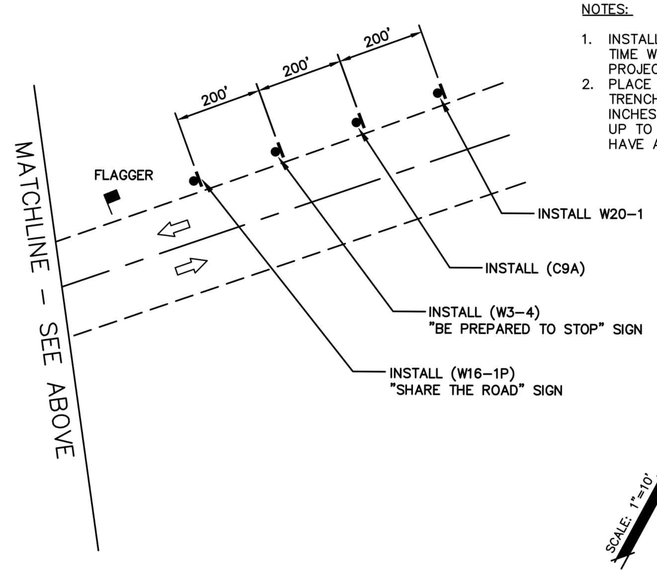

NOTES:

1. INSTALL A FLASHING BEACON FOR NIGHT TIME WARNING AT BOTH END OF THE PROJECT LIMITS.
2. PLACE STEEL PLATES ON OPEN TRENCHES OR DIG-OUT DEEPER THAN 2 INCHES. PLACE COLD ASPHALT TO RAMP UP TO 2 INCHES DIG-OUT EDGES TO HAVE A BETTER TRANSITION.

20 10 0 10 20 40

(IN FEET)
1 INCH = 10 FT.

PLAN # ____
SHEET ____ OF ____

ADVANCED DEVELOPMENT
2933 BENJAMIN COURT
SAN JOSE, CALIFORNIA 95124
(408) 376-0570
JACOB SAIDIAN - CIVIL ENGINEER

Revision	Date	App'd	Description

TRAFFIC CONTROL PLAN
16190 WOOD ACRES ROAD
APN: 510-53-015
LOS GATOS, CALIFORNIA

PROFESSIONAL ENGINEER YAGHOUB SAIDIAN No. 33509 Exp. 06/30/26 CIVIL STATE OF CALIFORNIA

APPROVED BY: YAGHOUB SAIDIAN
R.C.E. NO. 33509
EXPIRES: 06/30/26

Checked:	JS
Drawn:	EA
Designed:	JS
Surveyed:	JS
Scale:	1"=10'
Date:	04-03-25

Sheet No. 4
Of 8
Job No. 248

APPLICANT: NGUYEN & PHAM | ROAD NAME: WOOD ACRES ROAD | COUNTY FILE NO.: 4167-15G / LDE 15-4167G

D:\OS\Jacob\Jacob Projects\248-Wood Acres Los Gatos\Revised Grading Plan\ Sheet 4-Traffic Control Plan 248 07/01/18 12:58 edgar.andales

D:\OS\Jacob\Jacob Projects\248-Wood Acres Los Gatos\Revised Grading Plan\ Sheet 6-BMP-1 248 07/04/18 10:16 edgar.andales

3 Stabilized Construction Entrance/Exit

CASQA Detail TC-1

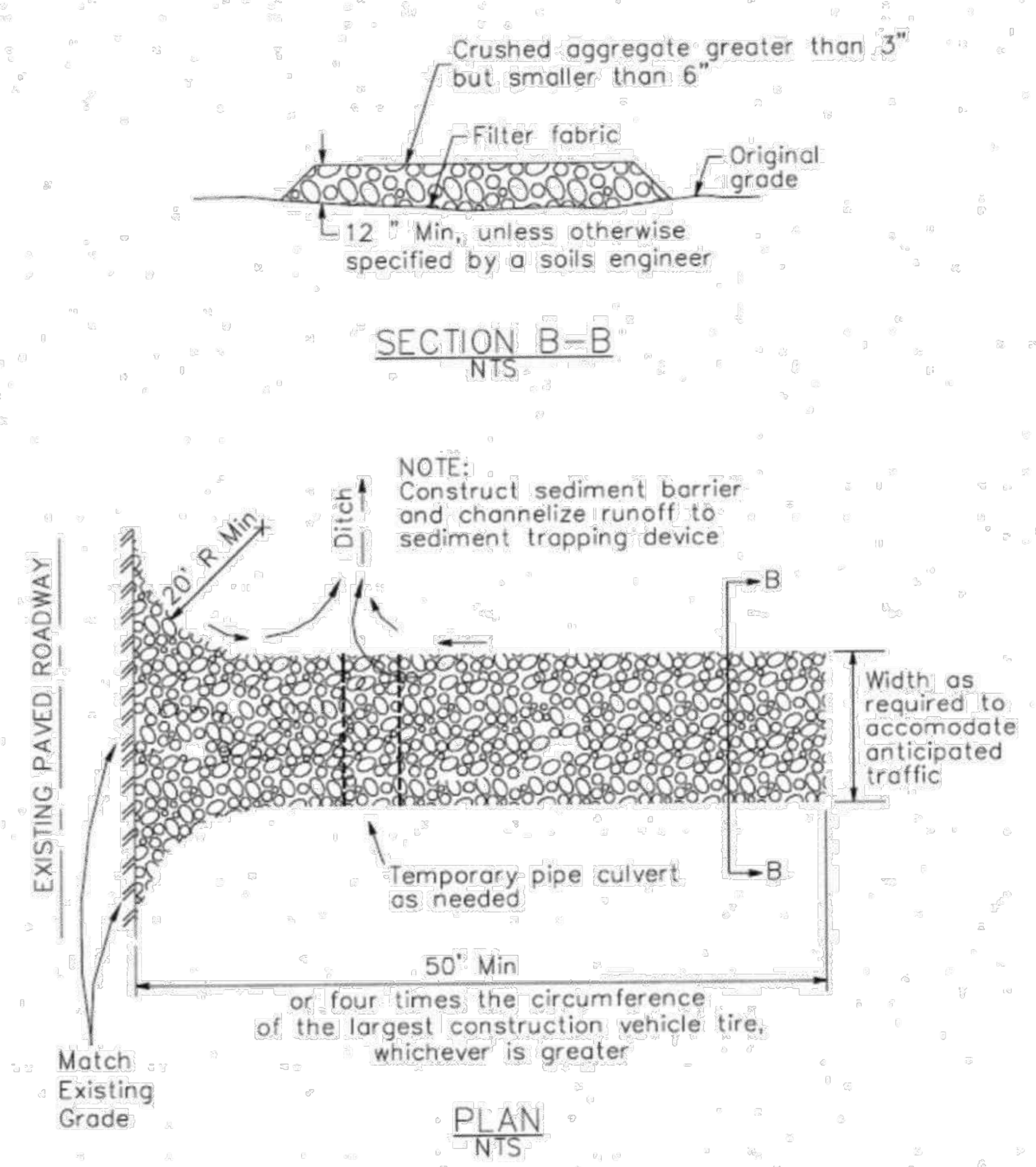

1 Silt Fence

CASQA Detail SE-1

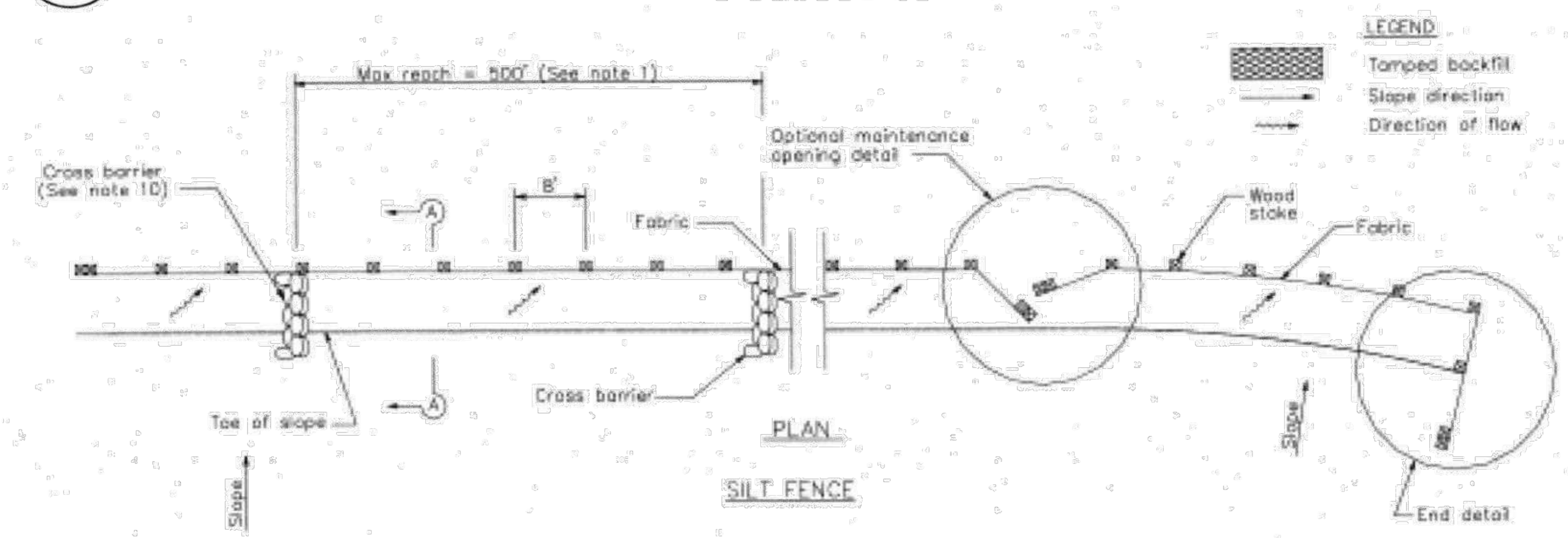

NOTES

1. Construct the length of each reach so that the change in base elevation along the reach does not exceed 1/3 the height of the linear barrier, in no case shall the reach length exceed 500'.
2. The last 8'-0" of fence shall be turned up slope.
3. Stake dimensions are nominal.
4. Dimension may vary to fit field condition.
5. Stakes shall be spaced at 8'-0" maximum and shall be positioned on downstream side of fence.
6. Stakes to overlap and fence fabric to fold around each stake one full turn. Secure fabric to stake with 4 staples.
7. Stakes shall be driven tightly together to prevent potential flow-through of sediment at joint. The tops of the stakes shall be secured with wire.
8. For end stake, fence fabric shall be folded around two stakes one full turn and secured with 4 staples.
9. Minimum 4 staples per stake. Dimensions shown are typical.
10. Cross barriers shall be a minimum of 1/3 and a maximum of 1/2 the height of the linear barrier.
11. Maintenance openings shall be constructed in a manner to ensure sediment remains behind silt fence.
12. Joining sections shall not be placed at sump locations.
13. Sandbag rows and layers shall be offset to eliminate gaps.

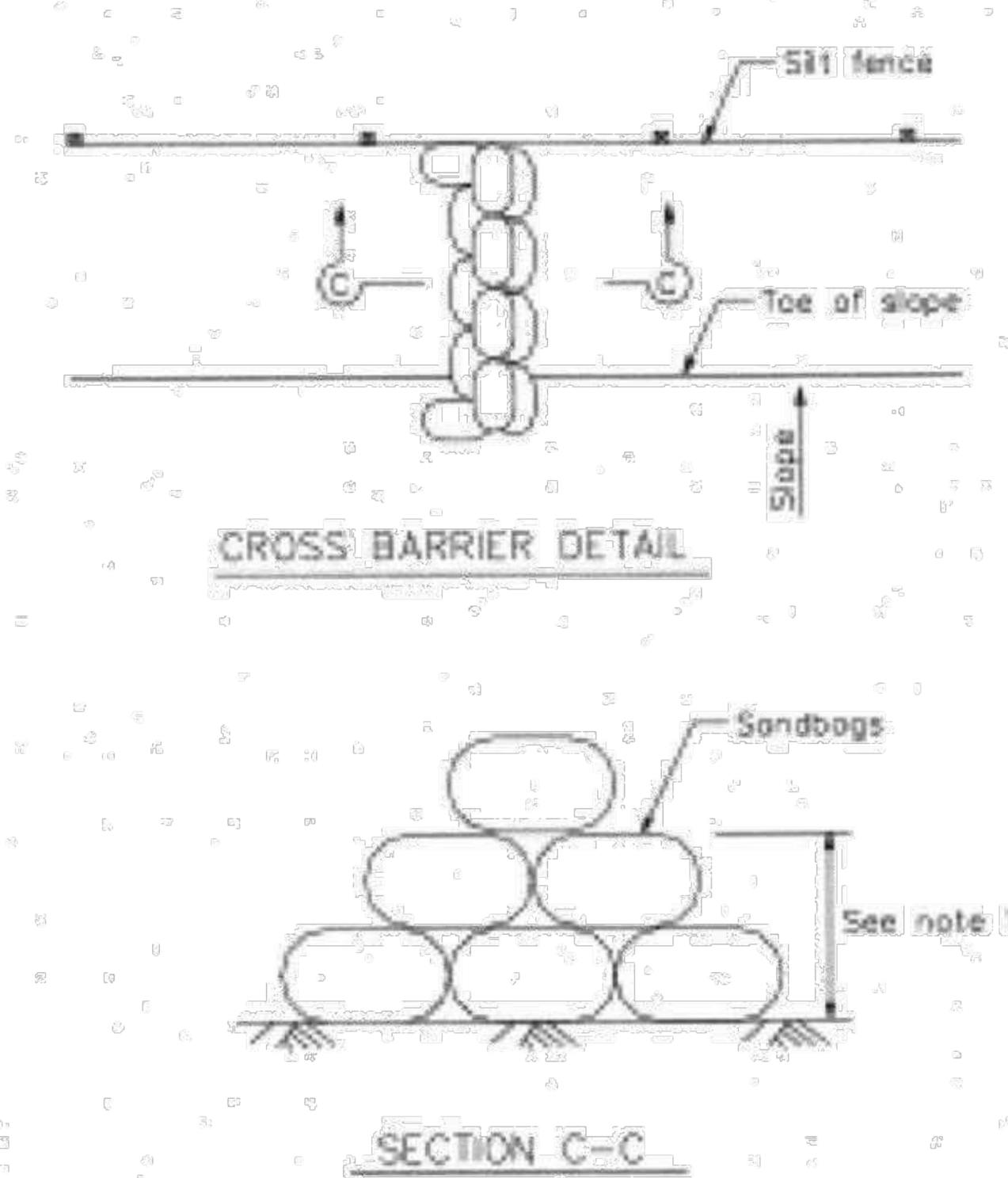

4 Velocity Dissipation Devices

CASQA Detail EC-10

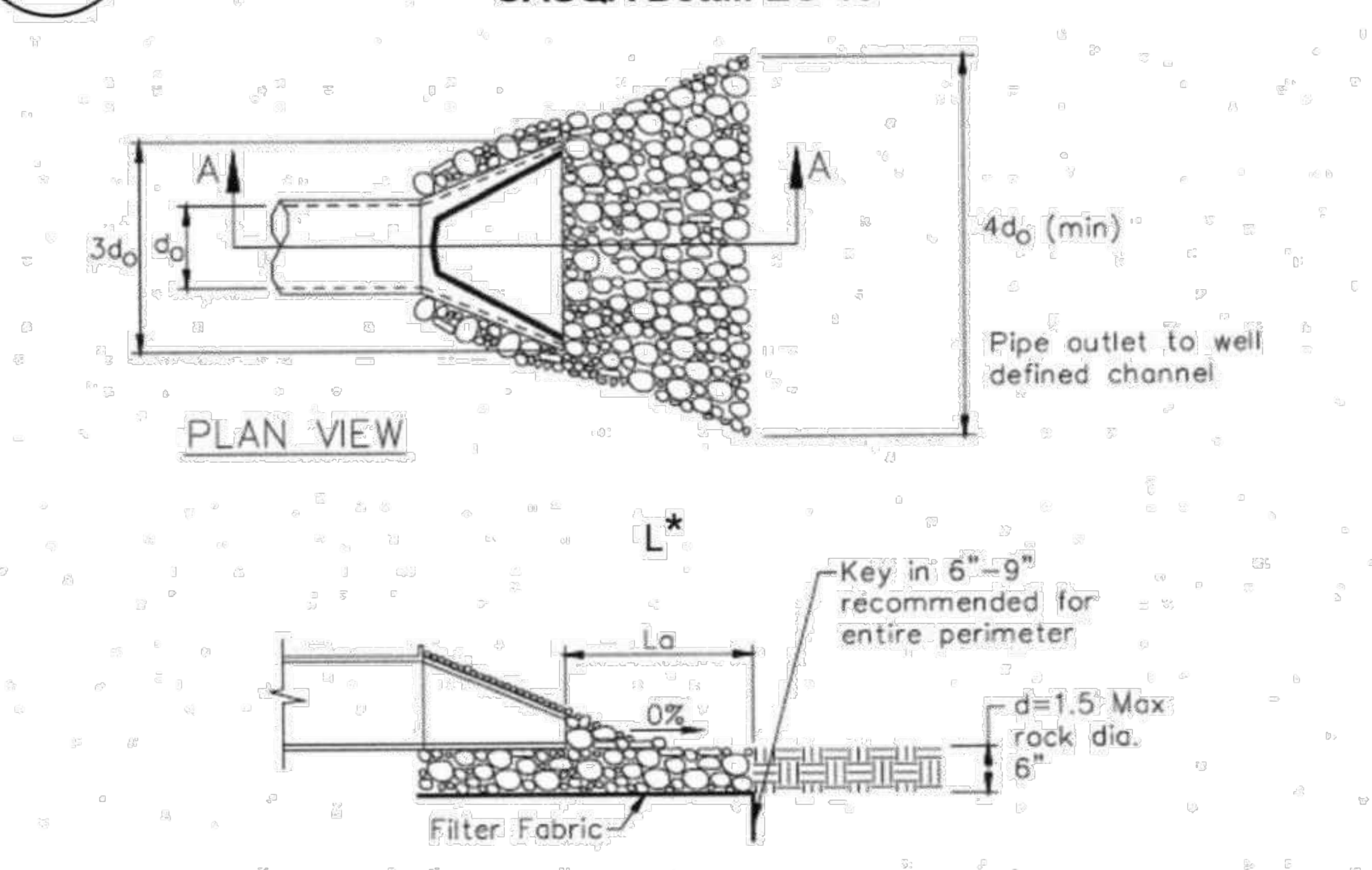

* Length per ABAG Design Standards

2 Silt Fence

CASQA Detail SE-1

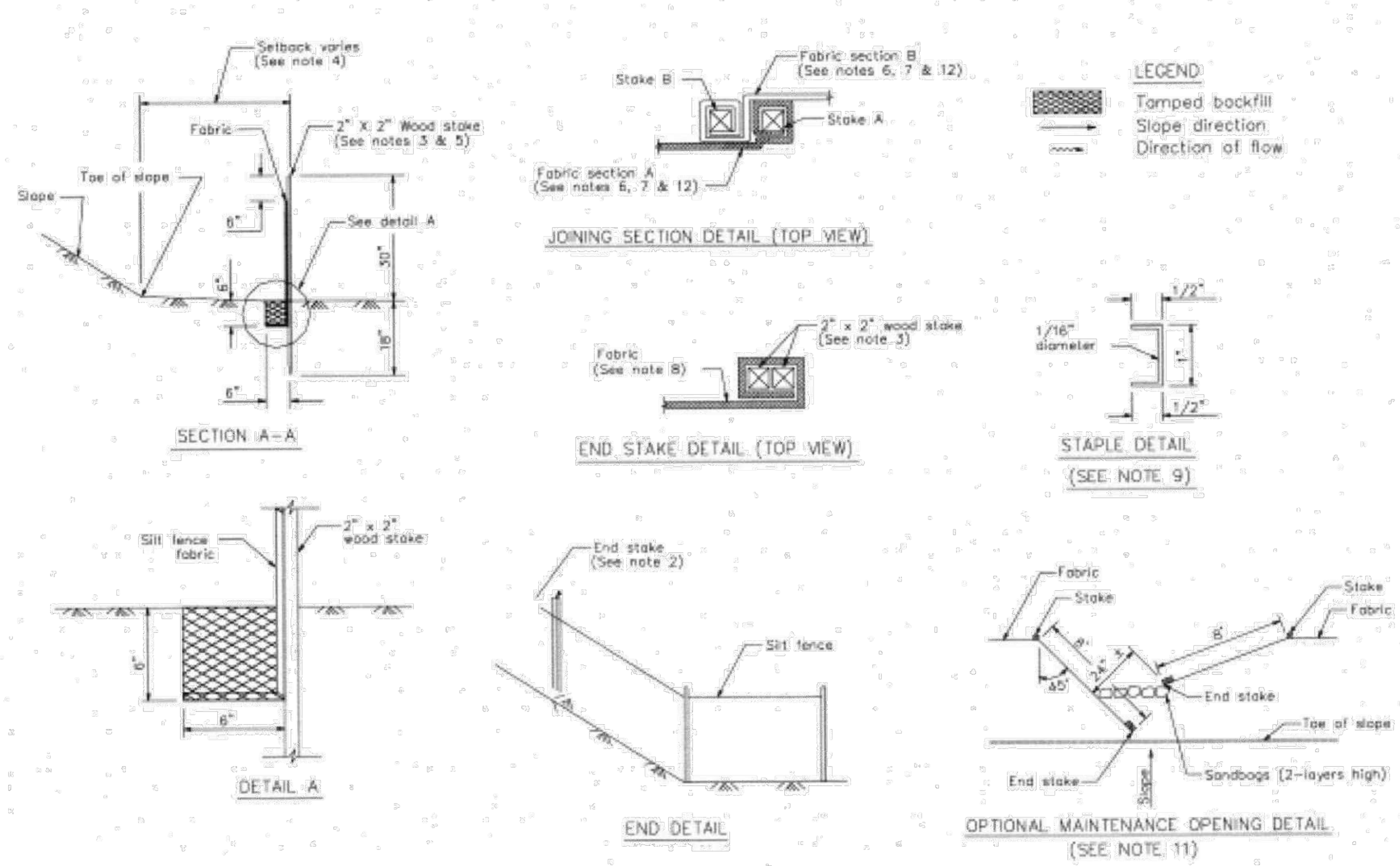

Source for Graphics: California Stormwater BMP Handbook, California Stormwater Quality Association, January 2003.
Available from www.cabmphandbooks.com.

PLAN #____
SHEET____ OF ____

STANDARD BEST MANAGEMENT PRACTICE NOTES

1. Solid and Demolition Waste Management: Provide designated waste collection areas and containers on site away from streets, gutters, storm drains, and waterways, and arrange for regular disposal. Waste containers must be watertight and covered at all times except when waste is deposited. Refer to Erosion & Sediment Control Field Manual, 4th Edition (page C3) or latest.
2. Hazardous Waste Management: Provide proper handling and disposal of hazardous wastes by a licensed hazardous waste material hauler. Hazardous wastes shall be stored and properly labeled in sealed containers constructed of suitable materials. Refer to Erosion & Sediment Control Field Manual, 4th Edition (pages C-5 to C-6) or latest.
3. Spill Prevention and Control: Provide proper storage areas for liquid and solid materials, including chemicals and hazardous substances, away from streets, gutters, storm drains, and waterways. Spill control materials must be kept on site where readily accessible. Spills must be cleaned up immediately and contaminated soil disposed properly. Refer to Erosion & Sediment Control Field Manual, 4th Edition (pages C-7 to C-8, C-13 to C-14) or latest.
4. Vehicle and Construction Equipment Service and Storage: An area shall be designated for the maintenance, where on-site maintenance is required, and storage of equipment that is protected from stormwater run-on and runoff. Measures shall be provided to capture any waste oils, lubricants, or other potential pollutants and these wastes shall be properly disposed of off site. Fueling and major maintenance/repair, and washing shall be conducted off-site whenever feasible. Refer to Erosion & Sediment Control Field Manual, 4th Edition (page C9) or latest.
5. Material Delivery, Handling and Storage: In general, materials should not be stockpiled on site. Where temporary stockpiles are necessary and approved by the County, they shall be covered with secured plastic sheeting or tarp and located in designated areas near construction entrances and away from drainage paths and waterways. Barriers shall be provided around storage areas where materials are potentially in contact with runoff. Refer to Erosion & Sediment Control Field Manual, 4th Edition (pages C-11 to C-12) or latest.
6. Handling and Disposal of Concrete and Cement: When concrete trucks and equipment are washed on-site, concrete wastewater shall be contained in designated containers or in a temporary lined and watertight pit where wasted concrete can harden for later removal. If possible have concrete contractor remove concrete wash water from site. In no case shall fresh concrete be washed into the road right-of-way. Refer to Erosion & Sediment Control Field Manual, 4th Edition (pages C-15 to C-16) or latest.
7. Pavement Construction Management: Prevent or reduce the discharge of pollutants from paving operations, using measures to prevent run-on and runoff pollution and properly disposing of wastes. Avoid paving in the wet season and reschedule paving when rain is in the forecast. Residue from saw-cutting shall be vacuumed for proper disposal. Refer to Erosion & Sediment Control Field Manual, 4th Edition (pages C-17 to C-18) or latest.
8. Contaminated Soil and Water Management: Inspections to identify contaminated soils should occur prior to construction and at regular intervals during construction. Remediating contaminated soil should occur promptly after identification and be specific to the contaminant identified, which may include hazardous waste removal. Refer to Erosion & Sediment Control Field Manual, 4th Edition (pages C-19 to C-20) or latest.
9. Sanitary/Septic Water Management: Temporary sanitary facilities should be located away from drainage paths, waterways, and traffic areas. Only licensed sanitary and septic waste haulers should be used. Secondary containment should be provided for all sanitary facilities. Refer to Erosion & Sediment Control Field Manual, 4th Edition (page C-21) or latest.
10. Inspection & Maintenance: Areas of material and equipment storage sites and temporary sanitary facilities must be inspected weekly. Problem areas shall be identified and appropriate additional and/or alternative control measures implemented immediately, within 24 hours of the problem being identified.

STANDARD EROSION CONTROL NOTES

1. Sediment Control Management:

   Tracking Prevention & Clean Up: Activities shall be organized and measures taken as needed to prevent or minimize tracking of soil onto the public street system. A gravel or proprietary device construction entrance/exit is required for all sites. Clean up of tracked material shall be provided by means of a street sweeper prior to an approaching rain event, or at least once at the end of each workday that material is tracked, or, more frequently as determined by the County Inspector. Refer to Erosion & Sediment Control Field Manual, 4th Edition (pages B-31 to B-33) or latest.

   Storm Drain Inlet and Catch Basin Inlet Protection: All inlets within the vicinity of the project and within the project limits shall be protected with gravel bags placed around inlets or other inlet protection. At locations where exposed soils are present, staked fiber roles or staked silt fences can be used. Inlet filters are not allowed due to clogging and subsequent flooding. Refer to Erosion & Sediment Control Field Manual, 4th Edition (pages B-49 to B-51) or latest.

   Storm Water Runoff: No storm water runoff shall be allowed to drain in to the existing and/or proposed underground storm drain system or other above ground watercourses until appropriate erosion control measures are fully installed.

   Dust Control: The contractor shall provide dust control in graded areas as required by providing wet suppression or chemical stabilization of exposed soils, providing for rapid clean up of sediments deposited on paved roads, furnishing construction road entrances and vehicle wash down areas, and limiting the amount of areas disturbed by clearing and earth moving operations by scheduling these activities in phases.

   Stockpiling: Excavated soils shall not be placed in streets or on paved areas. Borrow and temporary stockpiles shall be protected with appropriate erosion control measures(tarps, straw bales, silt fences, ect.) to ensure silt does not leave the site or enter the storm drain system or neighboring watercourse.

2. Erosion Control: During the rainy season, all disturbed areas must include an effective combination of erosion and sediment control. It is required that temporary erosion control measures are applied to all disturbed soil areas prior to a rain event. During the non-rainy season, erosion control measures must be applied sufficient to control wind erosion at the site.
3. Inspection & Maintenance: Disturbed areas of the Project's site, locations where vehicles enter or exit the site, and all erosion and sediment controls that are identified as part of the Erosion Control Plans must be inspected by the Contractor before, during, and after storm events, and at least weekly during seasonal wet periods. Problem areas shall be identified and appropriate additional and/ or alternative control measures implemented immediately, within 24 hours of the problem being identified.
4. Project Completion: Prior to project completion and signoff by the County Inspector, all disturbed areas shall be reseeded, planted, or landscaped to minimize the potential for erosion on the subject site.
5. It shall be the Owner's/Contractor's responsibility to maintain control of the entire construction operation and to keep the entire site in compliance with the erosion control plan.
6. Erosion and sediment control best management practices shall be operable year round or until vegetation is fully established on landscaped surfaces.

Best Management Practices and Erosion Control Details Sheet 1
County of Santa Clara

BMP-1

ADVANCED DEVELOPMENT
2933 BENJAMIN COURT
SAN JOSE, CALIFORNIA 95124
(408) 376-0570
JACOB SAIDIAN – CIVIL ENGINEER

Revision	Date	App'd	Description

BEST MANAGEMENT PRACTICE AND EROSION CONTROL PLAN DETAIL 1
APN: 510-53-015
LOS GATOS, CALIFORNIA

REGISTERED PROFESSIONAL ENGINEER YAGHOUB SAIDIAN No. 33509 Exp. 06/30/26 CIVIL STATE OF CALIFORNIA

APPROVED BY: YAGHOUB SAIDIAN
R.C.E. NO. 33509
EXPIRES 06/30/26

Checked: JS
Drawn: EA
Designed: JS
Surveyed: JS
Scale: 1"=10'
Date: 04-03-22

Sheet No. 6
Of 8
Job No. 248

12-1-14

7 Geotextiles and Mats

CASQA Detail EC-7

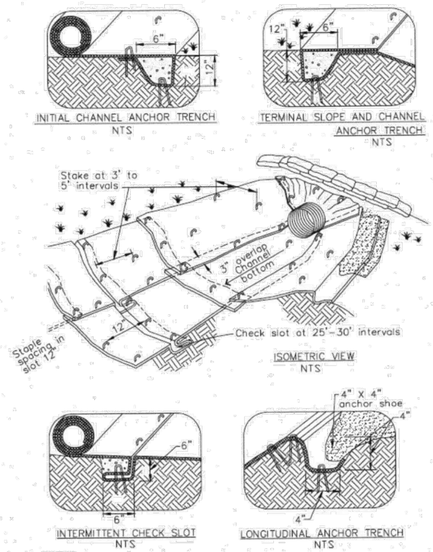

NOTES:
1. Check slots to be constructed per manufacturers specifications.
2. Staking or stapling layout per manufacturers specifications.
3. Install per manufacturer's recommendations

TYPICAL INSTALLATION DETAIL

5 Geotextiles and Mats

CASQA Detail EC-7

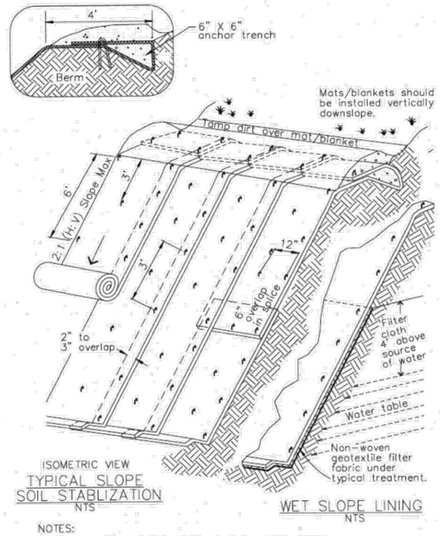

NOTES:
1. Slope surface shall be free of rocks, clods, sticks and grass. Mats/blankets shall have good soil contact.
2. Lay blankets loosely and stake or staple to maintain direct contact with the soil. Do not stretch.
3. Install per manufacturer's recommendations

TYPICAL INSTALLATION DETAIL

3 Entrance/Outlet Tire Wash

CASQA Detail TC-3

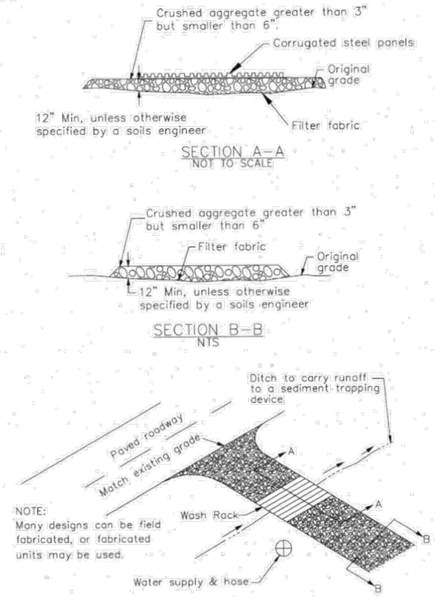

1 Fiber Rolls

CASQA Detail SE-5

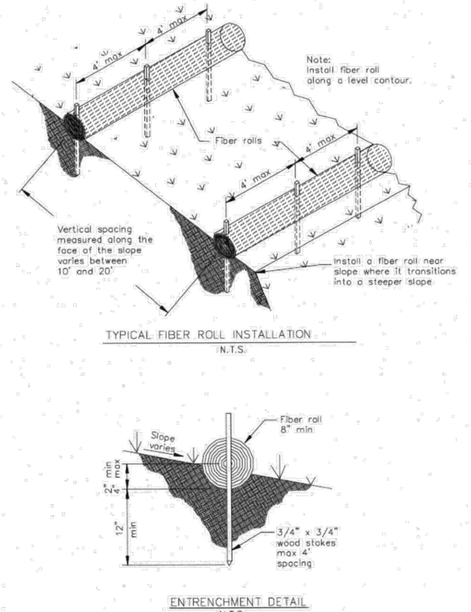

8 Storm Drain Inlet Protection

CASQA Detail SE-10

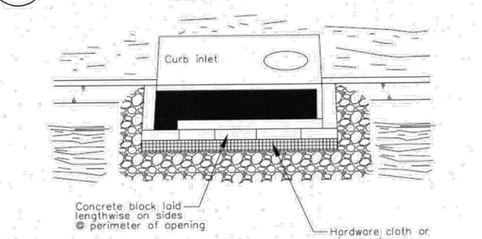

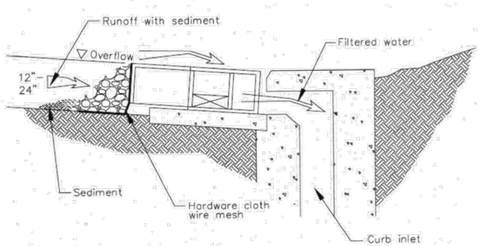

DI PROTECTION – TYPE 4
NOT TO SCALE

6 Storm Drain Inlet Protection

CASQA Detail SE-10

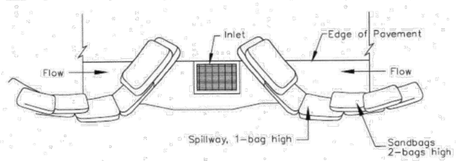

TYPICAL PROTECTION FOR INLET ON SUMP

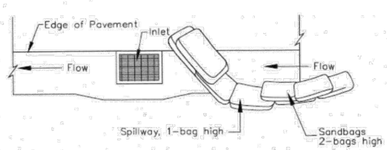

TYPICAL PROTECTION FOR INLET ON GRADE

NOTES:
1. Intended for short-term use.
2. Use to inhibit non-storm water flow.
3. Allow for proper maintenance and cleanup.
4. Bags must be removed after adjacent operation is completed
5. Not applicable in areas with high silts and clays without filter fabric.

DI PROTECTION TYPE 3
NOT TO SCALE

4 Storm Drain Inlet Protection

CASQA Detail SE-10

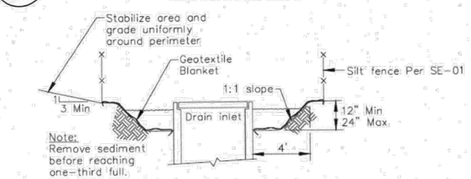

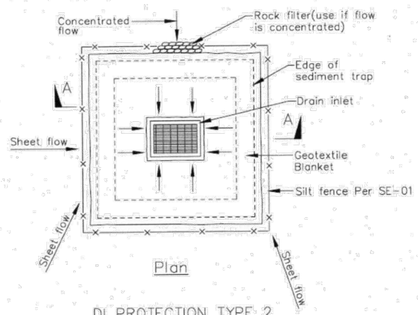

DI PROTECTION TYPE 2
NOT TO SCALE

Notes
1. For use in cleared and grubbed and in graded areas.
2. Shape basin so that longest inflow area faces longest length of trap.
3. For concentrated flows, shape basin in 2:1 ratio with length oriented towards direction of flow.

2 Concrete Waste Management

CASQA Detail WM-8

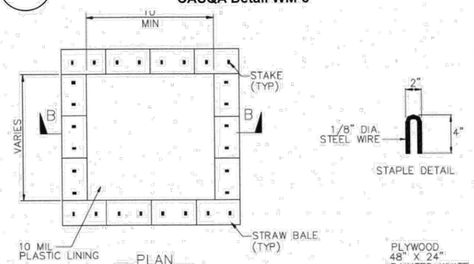

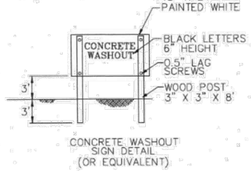

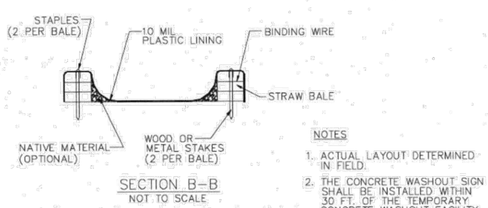

NOTES
1. ACTUAL LAYOUT DETERMINED IN FIELD.
2. THE CONCRETE WASHOUT SIGN SHALL BE INSTALLED WITHIN 30 FT. OF THE TEMPORARY CONCRETE WASHOUT FACILITY.

PLAN # ____
SHEET ____ OF ____

Best Management Practices and Erosion Control Details Sheet 2
County of Santa Clara

BMP-2

APPLICANT: NGUYEN & PHAM | ROAD NAME: WOOD ACRES ROAD | COUNTY FILE NO.: 4167-15G / LDE 15-4167G

ADVANCED DEVELOPMENT
2933 BENJAMIN COURT
SAN JOSE, CALIFORNIA 95124
(408) 376-0570
JACOB SAIDIAN - CIVIL ENGINEER

BEST MANAGEMENT PRACTICE AND EROSION CONTROL PLAN DETAIL 2
APN: 510-53-015
LOS GATOS, CALIFORNIA

No.	Revision	Date	App'd	Description

APPROVED BY: JACOBUS SAIDIAN
R.C.E. NO. 33509
EXPIRES 06/30/26

Checked: JS
Drawn: EA
Designed: JS
Surveyed: JS
Scale: 1"=10'
Date: 04-03-18

Sheet No. 7
Of 8
Job No. 248

D:\OS\Jacob\Jacob Projects\248-Wood Acres Los Gatos\Revised Grading Plan\ Sheet 7-BMP-2 248 07/04/18 10:23 edgar.andales

GENERAL STRUCTURAL NOTES

GENERAL

1. SEE DRAWINGS OTHER THAN STRUCTURAL FOR: TYPES OF FLOOR FINISH AND THEIR LOCATION, FOR DEPRESSIONS IN FLOOR SLABS, FOR OPENINGS IN WALLS AND FLOORS REQUIRED BY ARCHITECTURAL AND MECHANICAL FEATURES.

2. HOLES AND OPENINGS THROUGH WALLS AND FLOORS FOR DUCTS, PIPING AND VENTILATION SHALL BE COORDINATED BY THE CONTRACTOR WHO SHALL VERIFY SIZES AND LOCATION OF SUCH HOLES OR OPENINGS WITH THE MECHANICAL, PLUMBING, AND ELECTRICAL DRAWINGS AND THEIR SUB-CONTRACTORS.

3. NO PIPES OR DUCTS SHALL BE EMBEDDED IN WALLS UNLESS SPECIFICALLY DETAILED OR APPROVED BY THE ARCHITECT.

4. DRAWINGS AND SPECIFICATIONS REPRESENT FINISHED STRUCTURE. CONTRACTOR SHALL BE RESPONSIBLE FOR MEANS AND METHODS OF CONSTRUCTION INCLUDING BUT NOT LIMITED TO SHORING AND TEMPORARY BRACING. THE CONTRACTOR SHALL TAKE ALL NECESSARY MEASURES TO INSURE SAFETY OF ALL PERSONS AND STRUCTURES AT THE SITE AND ADJACENT TO THE SITE. OBSERVATION VISITS TO THE SITE BY THE ARCHITECT, ENGINEER OR CONSTRUCTION MANAGER SHALL NOT RELIEVE THE CONTRACTOR OF SUCH RESPONSIBILITY.

5. CONTRACTOR SHALL VERIFY ALL DIMENSIONS AT JOB SITE BEFORE COMMENCING WORK AND SHALL REPORT ANY DISCREPANCIES TO THE ARCHITECT.

6. OMISSIONS OR CONFLICTS BETWEEN VARIOUS ELEMENTS OF THE DRAWINGS, NOTES, AND DETAILS SHALL BE BROUGHT TO THE ATTENTION OF THE ARCHITECT AND RESOLVED BEFORE PROCEEDING WITH THE WORK.

7. DO NOT USE SCALED DIMENSIONS; USE WRITTEN DIMENSIONS. WHERE NO DIMENSION IS PROVIDED, CONSULT THE ARCHITECT FOR CLARIFICATION BEFORE PROCEEDING WITH THE WORK.

8. IF CERTAIN FEATURES ARE NOT FULLY SHOWN OR CALLED FOR ON THE DRAWINGS OR SPECIFICATIONS, THEIR CONSTRUCTION SHALL BE OF THE SAME CHARACTER AS FOR SIMILAR CONDITIONS THAT ARE CALLED FOR OR SHOWN.

DESIGN BASIS

1. APPLICABLE CODE:

   CALIFORNIA BUILDING CODE — 2019 CBC

2. VERTICAL LIVE LOADS (REDUCIBLE):
   FLOOR: 40 psf
   ROOFS: 20 psf

3. LATERAL LOADS:

   DESIGN WIND PRESSURE: $P_{S30} = \lambda(K_{ZT})(I)(P_{S30})$; BASIC WIND SPEED = 92 mph
   I= 1.0 K_{ZT}= 1.0 λ= 1.29 EXPOSURE "C"
   P_{S30}= 15.9 ZONE A
   P_{S30}= 10.6 ZONE C

   CODE SEISMIC: V = C_S W=0.315W
   Ss=2.557 S1=0.884 Fa=1.2 Fv=1.4 I= 1.0 R= 6.5
   SITE CLASS: "C"
   SEISMIC DESIGN CATEGORY: "E"
   FOR ASD: V=0.7*1.3*0.315W=0.286W

4. GEOTECHNICAL CRITERIA:

   FOUNDATIONS HAVE BEEN DESIGNED BASED ON THE RECOMMENDATIONS OF GEOTECHNICAL INVESTIGATION PREPARED BY GEOTRINITY CONSULTANTS INC. ENTITLED " GEOLOGIC HAZARDS INVESTIGATION AND GEOTECHNICAL UPDATE, PROPOSED SINGLE-FAMILY RESIDENCE, 16190 WOOD ACRES ROAD, LOS GATOS, CALIFORNIA". DATED FEBRUARY 22, 2022.

MATERIALS

1. CONCRETE:
   REINFORCING STEEL: ASTM A615 GRADE 40 FOR #4 BARS AND SMALLER
   ASTM A615 GRADE 60 FOR #5 BARS AND LARGER
   CONCRETE STRENGTH: 3000 psi MINIMUM AT 28 DAYS; 1" MAX. AGGREGATE.

   MINIMUM CONCRETE COVER FOR REINFORCING STEEL:
   SURFACES PLACED AGAINST EARTH 3"
   FORMED SURFACES BELOW GRADE 2"
   SURFACES EXPOSED TO WEATHER 2"
   EXTERIOR WALL AT EXTERIOR FACE 1.5"
   SLABS AND WALLS NOT EXPOSED TO WEATHER 1"

2. WOOD
   SAWN LUMBER GRADES - ALL DOUGLAS FIR;
   ROOF RAFTERS AND CEILING JOIST: NO. 2
   POSTS, BEAMS, AND HEADERS: NO. 1
   STUDS: NO. 2
   PLATES, BLOCKS, LIGHT FRAMING AND MISC.: NO. 2
   ALL LUMBER IN CONTACT WITH CONCRETE OR MASONRY TO BE DECAY RESISTANT OR PRESSURE TREATED.

   PLYWOOD SHEATHING:
   ROOFS: 3/4 in., C-D EXTERIOR APA RATED 32/16 EXPOSURE 1.
   FLOORS: 3/4 in., STRUCT 1 EXTERIOR APA RATED 48/24 EXPOSURE 1. WITH TONGUE AND GROOVE EDGES. GLUE TO SUPPORT MEMBERS.
   WALLS: 15/32 in., CD EXTERIOR APA RATED 32/16 EXPOSURE 1.

   FRAMING HARDWARE: AS MANUFACTURED BY SIMPSON COMPANY OR AN APPROVED EQUAL PRODUCT. SIMPSON DESIGNATIONS ARE ARE USED ON STRUCTURAL DRAWINGS.

   NAILS:COMMON WIRE GAGE UNLESS OTHERWISE NOTED.
   NAILING TO CONFORM TO CBC TABLE 2304.10.1.

   WOOD CONNECTION BOLTS: ASTM A307.
   ANCHOR BOLTS: AT SILL PLATE USE ASTM A307; AT TIE DOWNS USE ASTM A36 AND A108

   PARALLEL STRAND LUMBER (PSL):
   PARALLAM DF 2.0E AS MANUFACTURED BY TRUS JOIST MACMILLAN. ESR-1387

   ALL FRAMING LUMBER SHALL HAVE 19% MAXIMUM MOISTURE CONTENT AT TIME OF INSTALLATION.

3. STEEL

   WIDE FLANGE: ASTM A992
   PLATES: ASTM A572, GRADE 50.
   WELDING ELECTRODES: E-70XX.
   NON-SHRINK GROUT: ASTM C1107, CLASS B.

TABLE 2304.10.1 FASTENING SCHEDULE

DESCRIPTION OF BUILDING ELEMENTS	NUMBER AND TYPE OF FASTENER	SPACING AND LOCATION
1. Blocking between ceiling joists, rafters or trusses to top plate or other framing below	3 - 8d (2 ½" x 0.131")	Each end, toenail
Blocking between rafters or truss not at the wall top plate, to rafter or truss	2 - 8d (2 ½" x 0.131")	Each end, toenail
	2 - 16d (3 ½" x 0.162")	End nail
Flat blocking to truss and web filler	16d (3 ½" x 0.162")	6" O.C. Face nail
2. Ceiling joists to top plate	3 - 8d (2 ½" x 0.131")	Each joist, toenail
3. Ceiling joist not attached to parallel rafter, laps over partitions (no thrust) (see Section 2308.7.3.1, Table 2308.7.3.1)	3 - 16d (3 ½" x 0.162")	Face nail
4. Ceiling joist attached to parallel rafter (heel joint) (see Section 2308.7.3.1, Table 2308.7.3.1)	Per Table 2308.7.3.1	Face nail
5. Collar tie to rafter	3 - 10d (3" x 0.148")	Face nail
6. Rafter or roof truss to top plate (See Section 2308.7.5, Table 2308.7.5)	3 - 10d (3" x 0.148")	Toenail
7. Roof rafters to ridge valley or hip rafters; or roof rafter to 2-inch ridge beam	2 - 16d (3 ½" x 0.162")	End nail
	3 - 10d (3" x 0.148")	Toenail
8. Stud to stud (not at braced wall panels)	16d (3 ½" x 0.162")	24" O.C. Face nail
9. Stud to stud and abutting studs at intersecting wall corners (at braced wall panels)	16d (3 ½" x 0.162")	16" O.C. Face nail
10. Built-up header (2" to 2" header)	16d (3 ½" x 0.162")	16" O.C. Each edge, Face nail
11. Continuous header to stud	4 - 8d (2 ½" x 0.131")	Toenail
12. Top plate to top plate	16d (3 ½" x 0.162")	16" O.C. Face nail
13. Top plate to top plate, at end joints	8-16d (3 ½" x 0.162")	Each side of end joint, Face nail (min. 24" lap splice length)
14. Bottom plate to joist, rim joist, band joist or block–ing (not at braced wall panels)	16d (3 ½" x 0.162")	16" O.C. Face nail
15. Bottom plate to joist, rim joist, band joist or block–ing at braced wall panels	2-16d (3 ½" x 0.162")	16" O.C. Face nail
16. Stud to top or bottom plate	4 - 8d (2 ½" x 0.131")	Toenail
	2 - 16d (3 ½" x 0.162")	End nail
17. Top or bottom plate to stud	2-16d (3 ½" x 0.162")	End nail
18. Top plates, laps at corners and intersections	2-16d (3 ½" x 0.162")	Face nail
19. 1" brace to each stud and plate	2 - 8d (2 ½" x 0.131")	Face nail
20. 1"x 6" sheathing to each bearing	2 - 8d (2 ½" x 0.131")	Face nail
21. 1" × 8" and wider sheathing to each bearing	3 - 8d (2 ½" x 0.131")	Face nail
22. Joist to sill, top plate, or girder	3 - 8d (2 ½" x 0.131")	Toenail
23. Rim joist, band joist, or blocking to top plate, sill or other framing below	8d (2 ½" x 0.131")	6" O.C. Toenail
24. 1"x 6" subfloor or less to each joist	2 - 8d (2 ½" x 0.131")	Face nail
25. 2" subfloor to joist or girder	2-16d (3 ½" x 0.162")	Face nail
26. 2" planks (plank & beam – floor & roof)	2-16d (3 ½" x 0.162")	Each bearing, face nail
27. Built-up girders and beams, 2" lumber layers	20d (4"x0.192")	32" o.c. Face nail at top & bot-tom staggered on opposite sides
	2-20d (4"x0.192")	Ends and at each splice, face nail
28. Ledger strip supporting joists or rafters	3-16d (3 ½" x 0.162")	Each joist or rafter, face nail
29. Joist to band joist or rim joist	3-16d (3 ½" x 0.162")	End nail
30. Bridging or blocking to joist, rafter or truss	2 - 8d (2 ½" x 0.131")	Each end, toenail

TABLE 1705.8
REQUIRED SPECIAL INSPECTIONS AND TESTS OF CAST-IN-PLACE DEEP FOUNDATION ELEMENTS

TYPE	CONTINUOUS SPECIAL INSPECTION	PERIODIC SPECIAL INSPECTION
1. Inspect drilling operations and maintain complete and accurate records for each element.	X	—
2. Verify placement locations and plumbness, confirm element diameters, bell diameters (if applicable), lengths, embedment into bedrock (if applicable) and adequate end-bearing strata capacity. Record concrete or grout volumes.	X	—
3. For concrete elements, perform tests and additional special inspections in accor–dance with Section 1705.3.	—	—

TESTING, SP. INSPECTION, & STRUCT. OBSERVATIONS

TESTING, SPECIAL INSPECTIONS, AND STRUCTURAL OBSERVATIONS

(1) THE FOLLOWING WORK IS REQUIRED IF MARKED TO BE TESTED, SPECIAL INSPECTED, OR STRUCTURALLY OBSERVED. PER UBC CHAPTER 17 REQUIREMENTS. TESTING SHALL BE MADE IN ACCORDANCE WITH THE CURRENT CODE BY AN APPROVED SPECIAL TESTING LAB OR SPECIAL INSPECTOR RETAINED BY THE OWNER.

(2) ENGINEERING OBSERVATION SHALL BE DONE BY THE ENGINEER OF RECORD.

(3) ENGINEERING OBSERVATION SHALL BE DONE BY A GEOTECHNICAL ENGINEER.

ITEM	TO BE PROVIDED IF MARKED (1)		
	TESTING	SPECIAL INSPECTION	ENGINEERS OBSERVATION
FOOTING EXCAVATION			X (3)
CONCRETE STRENGTH	X		
SHEAR WALL NAILING AND HARDWARE INSTALLATION			X
A.B. AND HOLDOWN INSTALLATION			X
CONCRETE REINFORCING			X
STEEL WELDING		X	

NOTES:

1. AT CONTRACTOR'S OPTION USE EITHER SAWCUT OR PLASTIC STRIP CNTRL JNTS.
2. LOCATE CNTRL. AND CONSTR. JNTS. TO ENCLOSE APPROXIMATELY SQUARE AREAS (WIDTH TO LENGTH RATIOS OF ENCLOSED AREAS SHALL NOT EXCEED 1.33) NO GREATER THAN 400 SQUARE FEET.

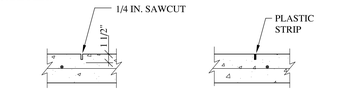

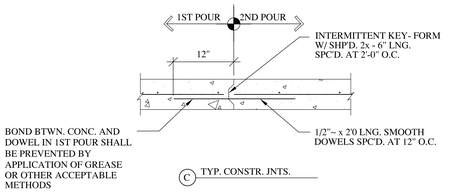

TYP. SLAB ON GRADE CNTRL. /CONSTR. JNTS. 4

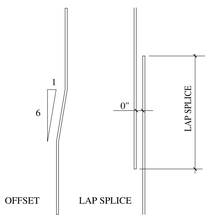

BAR SIZE	NOTE: fc' = 3000 psi			
	LAP SPLICE		EMBEDMENT	
	TOP	OTHER	TOP	OTHER
#3	30"	21"	23"	16"
#4	39"	29"	30"	22"
#5	49"	36"	37"	27"
#6	59"	42"	45"	32"
#7	68"	49"	52"	37"
#8	77"	56"	59"	43"
#9	88"	63"	67"	48"
#10	97"	73"	74"	56"
#11	116"	90"	89"	69"

NOTES:

1 SPLICES OF HORIZONTAL REINFORCEMENT IN WALLS SHALL BE STAGGERED. SPLICES ARE CLASS "B".
2. 0.80 OF SPLICE LENGTH MAY USED IF LESS THAN 1/2 OF THE BARS ARE LAP SPLICED WITHIN A REQUIRED LAP LENGTH, OR BARS SPACED AT 6d O.C. OR GREATER.
3. TOP BARS REFER TO HORIZONTAL BARS WITH MORE 12" CONCRETE PLACE BELOW DURING A POUR OTHER BARS ARE BOTTOM OR VERTICAL BARS.

REINF. STEEL TYP. OFFSET AND LAP SPLICES 1

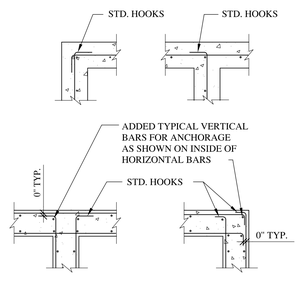

CONCRETE MEMBERS INTERSECTIONS 5

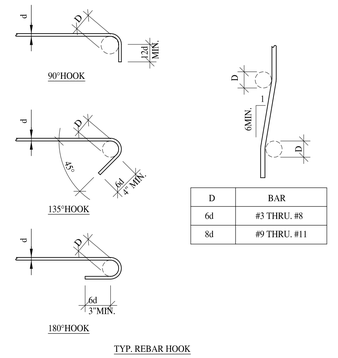

D	BAR
6d	#3 THRU. #8
8d	#9 THRU. #11

TYP. REBAR HOOK

REINF. STEEL STD. HOOK LENGTHS 2

STRUCTURAL SHEET INDEX

S0	STRUCTURAL NOTES AND TYPICAL DETAILS
S1.1	FOUNDATION PLAN AND DETAILS
S1.2	FIRST FLOOR FRAMING PLAN AND DETAILS
S1.3	SECOND FLOOR FRAMING PLAN AND DETAILS
S1.4	ROOF FRAMING PLAN AND DETAILS
S2.1	STRUCTURAL DETAILS
S2.2	STRUCTURAL DETAILS
S2.3	STRUCTURAL DETAILS
S2.4	STRUCTURAL DETAILS
S2.5	STRUCTURAL DETAILS
S2.6	STRUCTURAL DETAILS
S2.7	STRUCTURAL DETAILS

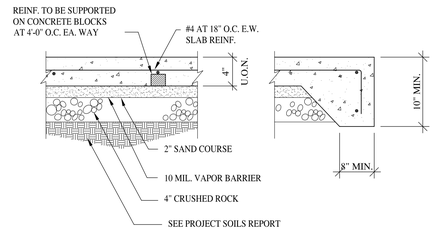

SLAB-ON-GRADE 3

REINF. STEEL STD. HOOK LENGTHS 2

GeoTrinity Consultants, Inc.
7770 Pardee Lane, Suite 101
Oakland, CA 94621
www.geotrinity.com
Email: info@geotrinity.com
Tel : 510-383-9950
Fax: 510-383-9957

REGISTERED PROFESSIONAL ENGINEER YIN-RONG YANG No. C 48655 Exp. 06/30/22 CIVIL STATE OF CALIFORNIA

Jerry Yang, P.E.; G.E.

Owners:
Lucas Nguyen & Margaret Pham
c/o Ellte Realty Services

2787 Moorpark Ave.
San Jose, CA 95128

No.	Rev1: 2/28/2022	Date

Project Name and Address

NGUYEN RESIDENCE

16190 Wood Acres Road
Los Gatos, CA

Sheet Title

STRUCTURAL NOTES AND TYPICAL DETAILS

Project	GE 2681	Sheet
Date	8/12/2019	S0
Scale		

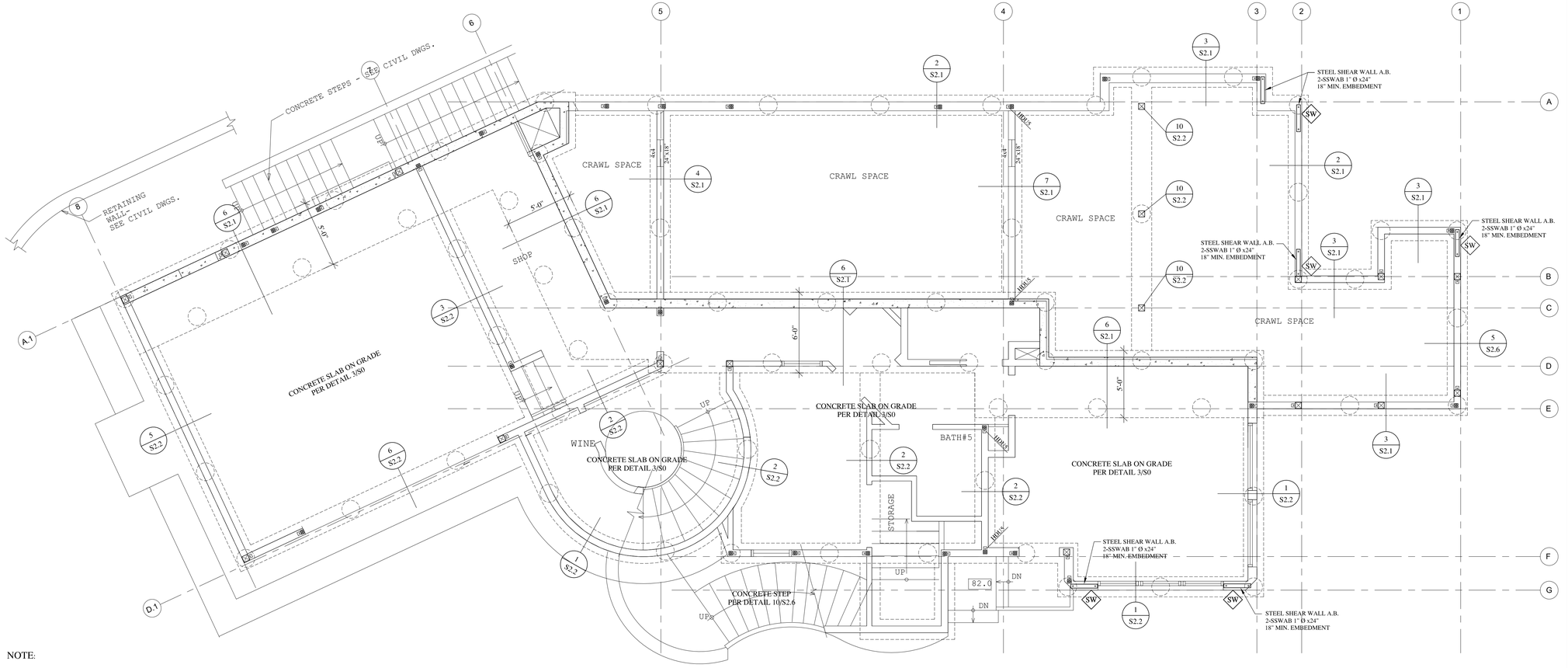

NOTE:

DENOTES WALL ABOVE FOUNDATION.

DENOTES HDU4 HOLDOWN. U.O.N. SEE DETAIL 12/S2.5

PER DETAIL 9/S2.4 FOR HEADER FRAMING DETAIL AND SIZE. U.O.N.

DENOTES CONC. PIER UNDER GRADE BEAM OR FOOTING. SEE DETAIL 12/S2.1

HOT-DIPPED GALVANIZED STEEL OR STAINLESS STEEL FASTENERS (i.e., NAILS, SCREWS, A.B. HANGERS, ETC.) MUST BE USED WHEN DIRECTLY IN CONTACT WITH PRESSURE-TREATED LUMBERS.

ALL WOOD MEMBERS IN CONTACT WITH CONCRETE OR EXPOSED TO WEATHER TO BE DECAY RESISTANT OR PRESSURE TREATED.

ALL NAILS, SCREWS, BOLTS, METAL CONNECTORS AND FLASHING EXPOSED TO WEATHER SHALL BE HOT DIPPED GALVANIZED OR STAINLESS STEEL

FOUNDATION PLAN

SCALE: 1/4" = 1'-0"

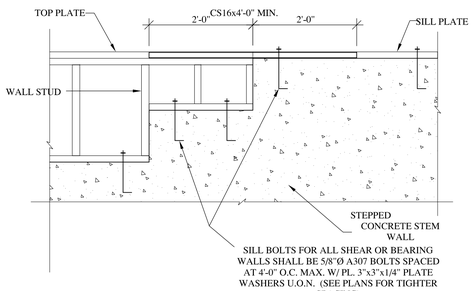

STEM WALL STEP DETAIL | 4

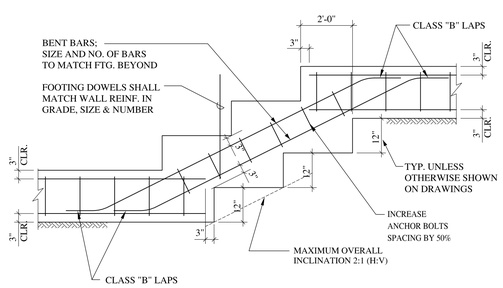

PER DETAIL 7/ S2.1 FOR FRAMING INFO. NOT SHOWN

GRADE BEAM STEP DETAIL | 3

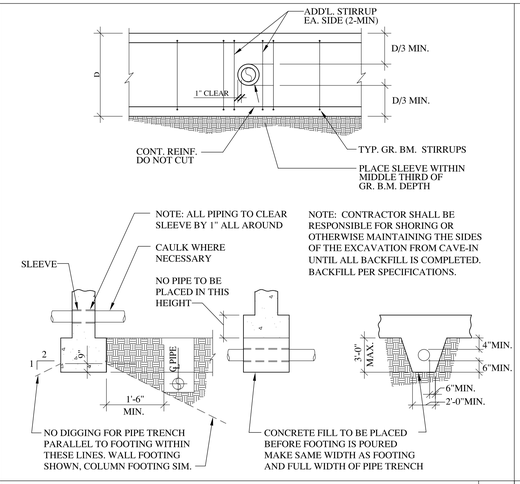

TYPICAL PIPE CLEARANCES AT FOOTING | 2

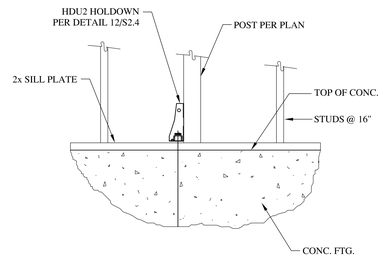

TYPICAL POST ON CONCRETE FOOTING | 1

GeoTrinity Consultants, Inc.
7770 Pardee Lane, Suite 101
Oakland, CA 94621
www.geotrinity.com
Email: info@geotrinity.com
Tel : 510-383-9950
Fax: 510-383-9957

REGISTERED PROFESSIONAL ENGINEER YIH-RONG YANG No. C 48655 Exp. 06/30/22 CIVIL STATE OF CALIFORNIA

Jerry Yang, P.E.; G.E.

Owners:
Lucas Nguyen & Margaret Pham
c/o Ellte Realty Services

2787 Moorpark Ave.
San Jose, CA 95128

No.		Date
1	Rev1: 2/28/2022	

Project Name and Address

NGUYEN RESIDENCE

16190 Wood Acres Road
Los Gatos, CA

Sheet Title

FOUNDATION PLAN AND DETAILS

Project	GE 2681	Sheet
Date	8/12/2019	S1.1
Scale		

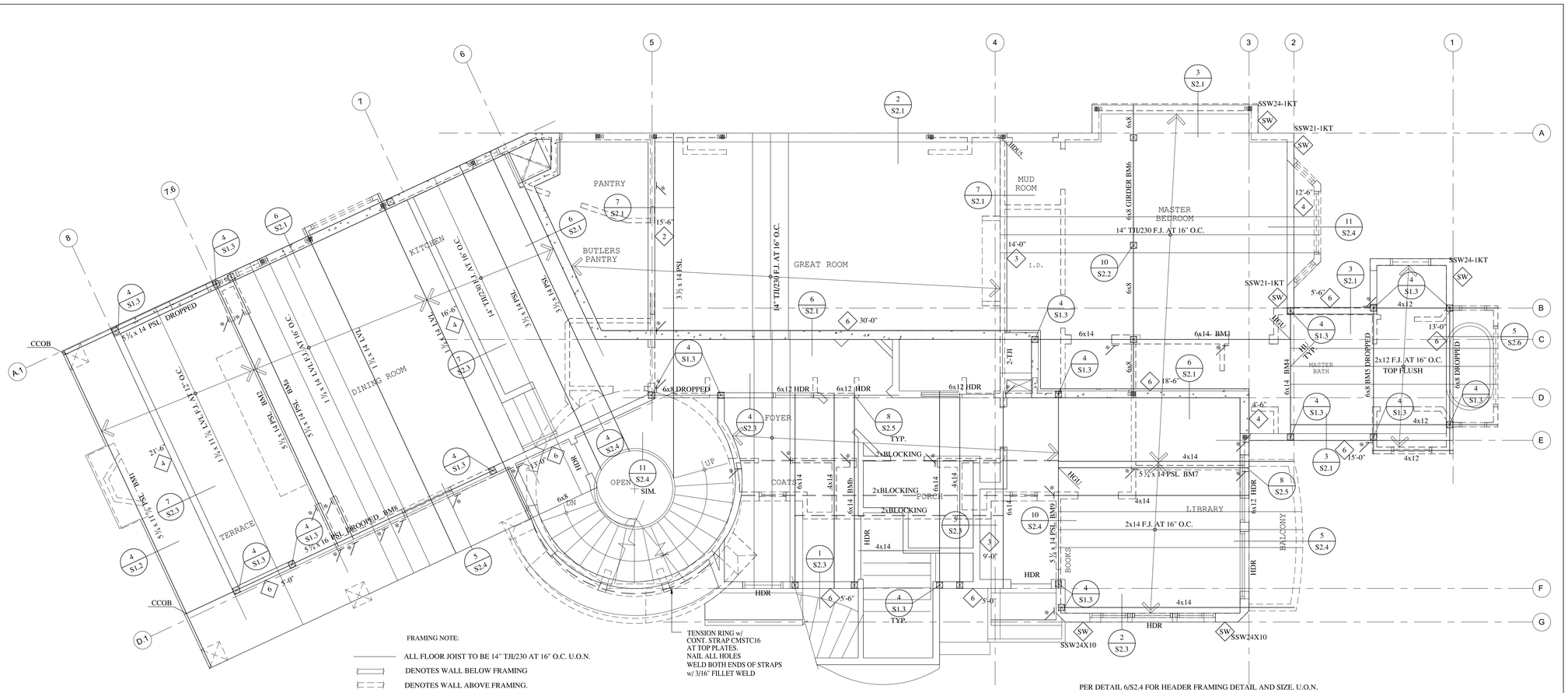

FRAMING NOTE:

ALL FLOOR JOIST TO BE 14" TJI/230 AT 16" O.C. U.O.N.

DENOTES WALL BELOW FRAMING

DENOTES WALL ABOVE FRAMING.

X'-Y" DENOTES SHEAR WALL BELOW FRAMING PLAN. X'-Y" DENOTES THE MINIMUM LENGTH OF THE SHEAR WALL PER S.W. SCHED. AND DETAILS IN SHEET S2.5

SEE GENERAL NOTES FOR ROOF/FLOOR SHEATHING SPECIFICATION AND DETAIL 1/S1.2 FOR NAILING

PER DETAIL 6/S2.4 FOR HEADER FRAMING DETAIL AND SIZE. U.O.N.

CMST12 STRAP TIE PER DETAIL 7/S2.5, 8/S2.5 AND 9/S2.5

DENOTES HDU4 HOLDOWN. U.O.N. SEE DETAIL 12/S2.5

FIRST FLOOR FRAMING PLAN

SCALE: 1/4" = 1'-0"

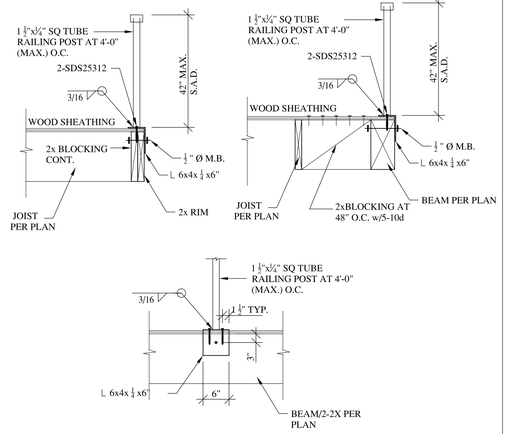

RAILING CONNECTION | 4

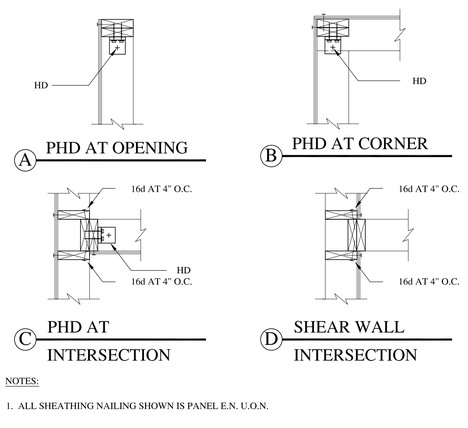

NOTES:

1. ALL SHEATHING NAILING SHOWN IS PANEL E.N. U.O.N.

SHEAR TRANSFER AND/OR PHD LOCATION | 3

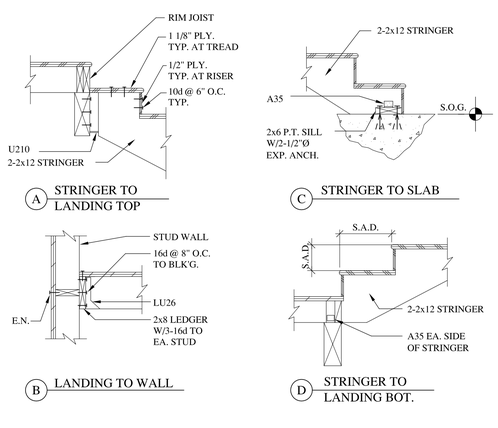

STAIR FRAMING | 2

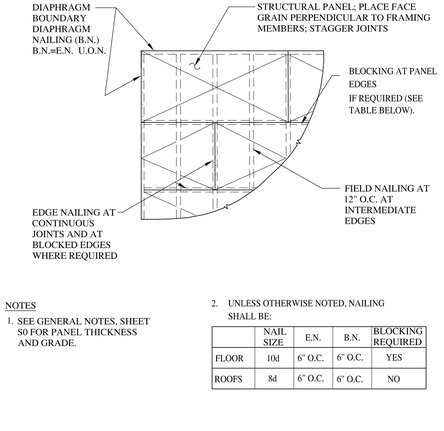

NOTES

1. SEE GENERAL NOTES, SHEET S0 FOR PANEL THICKNESS AND GRADE.

2. UNLESS OTHERWISE NOTED, NAILING SHALL BE:

	NAIL SIZE	E.N.	B.N.	BLOCKING REQUIRED
FLOOR	10d	6" O.C.	6" O.C.	YES
ROOFS	8d	6" O.C.	6" O.C.	NO

FLOOR/ROOF SHEATHING ATTACHMENT | 1

GeoTrinity Consultants, Inc.
7770 Pardee Lane, Suite 101
Oakland, CA 94621
www.geotrinity.com
Email: info@geotrinity.com
Tel : 510-383-9950
Fax: 510-383-9957

REGISTERED PROFESSIONAL ENGINEER YIH-RONG YANG No. C 48655 Exp. 06/30/22 CIVIL STATE OF CALIFORNIA

Jerry Yang, P.E.; G.E.

Owners:
Lucas Nguyen & Margaret Pham
c/o Ellte Realty Services

2787 Moorpark Ave.
San Jose, CA 95128

No.		Date
1	Rev1: 2/28/2022	

Project Name and Address

NGUYEN RESIDENCE

16190 Wood Acres Road
Los Gatos, CA

Sheet Title

FIRST FLOOR FRAMING PLAN AND DETAILS

Project	GE 2681	Sheet	S1.2
Date	8/12/2019		
Scale			

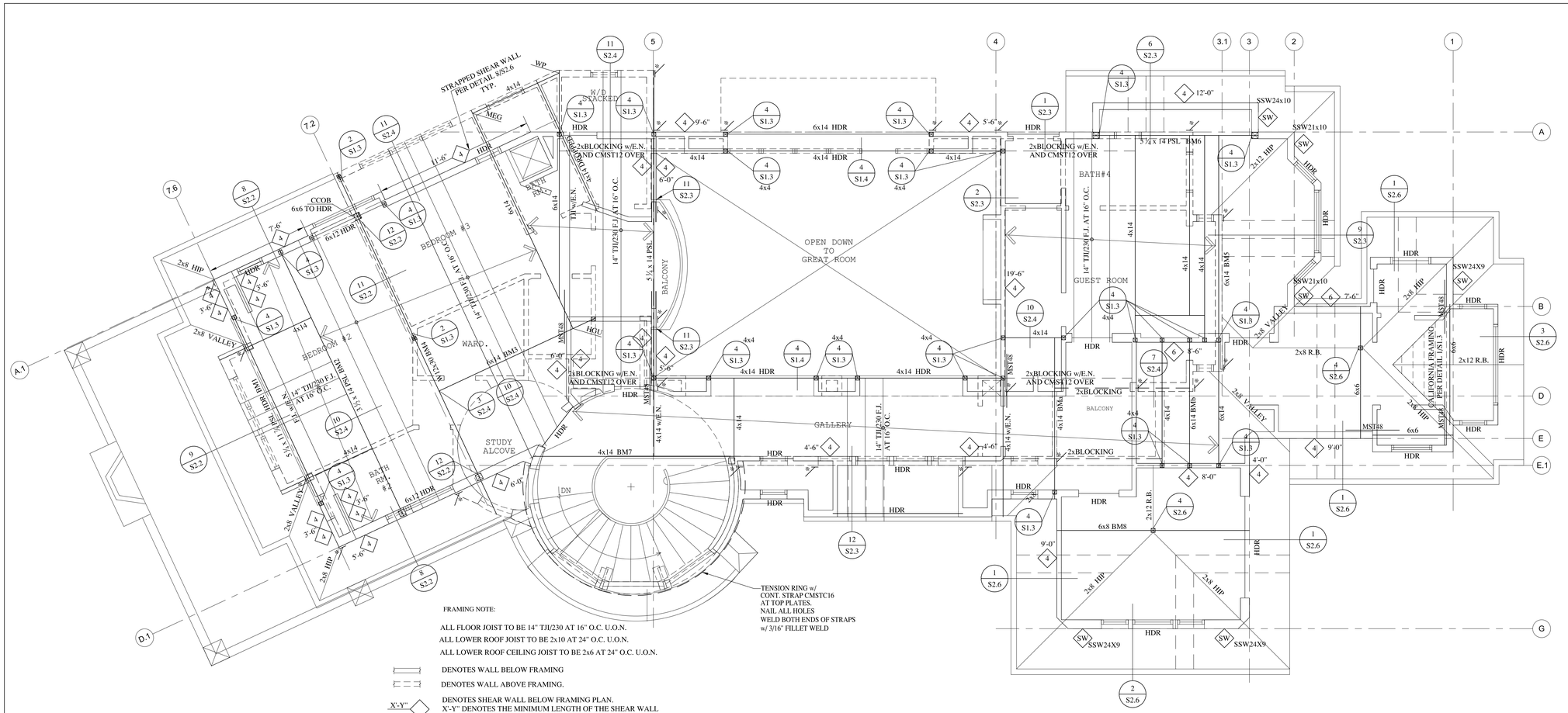

FRAMING NOTE:

ALL FLOOR JOIST TO BE 14" TJI/230 AT 16" O.C. U.O.N.

ALL LOWER ROOF JOIST TO BE 2x10 AT 24" O.C. U.O.N.

ALL LOWER ROOF CEILING JOIST TO BE 2x6 AT 24" O.C. U.O.N.

DENOTES WALL BELOW FRAMING

DENOTES WALL ABOVE FRAMING.

X'-Y" DENOTES SHEAR WALL BELOW FRAMING PLAN, X'-Y" DENOTES THE MINIMUM LENGTH OF THE SHEAR WALL PER S.W. SCHED. AND DETAILS IN SHEET S2.5

SEE GENERAL NOTES FOR ROOF/FLOOR SHEATHING SPECIFICATION AND DETAIL 1/S1.2 FOR NAILING

PER DETAIL 6/S2.4 FOR HEADER FRAMING DETAIL AND SIZE. U.O.N.

CMST12 STRAP TIE PER DETAIL 7/S2.5, 8/S2.5 AND 9/S2.5

SECOND FLOOR FRAMING PLAN

SCALE: ¼" = 1'-0"

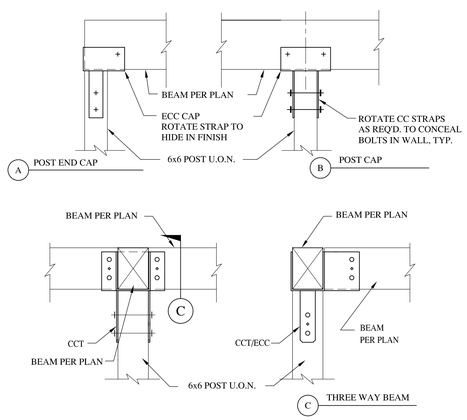

BEAM TO POST CONNECTIION 4

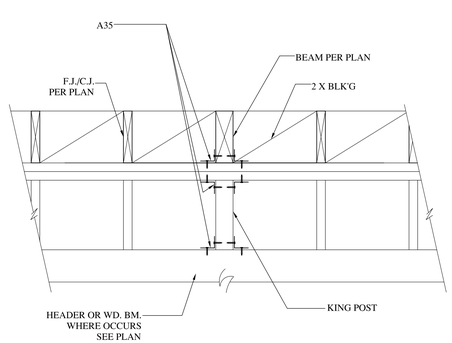

BEAM UPON HEADER 3

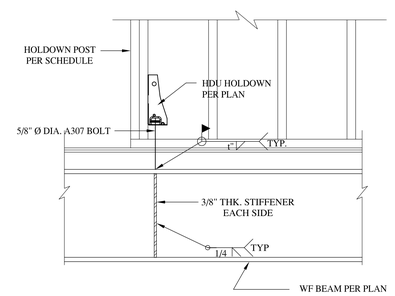

HOLDOWN SCHEDULE

HOLDOWN NO.	STUD SCREWS	THREADED ROD ANCHOR		CAPACITY	MINIMUM POST SIZE
		A.B. TYPE	WELDING t		
HDU8	20-SDS ¼x2½	⅝" Ø	⅜"	7870#	3-2x

SHEARWALL HOLDOWN ON STEEL BEAM 2

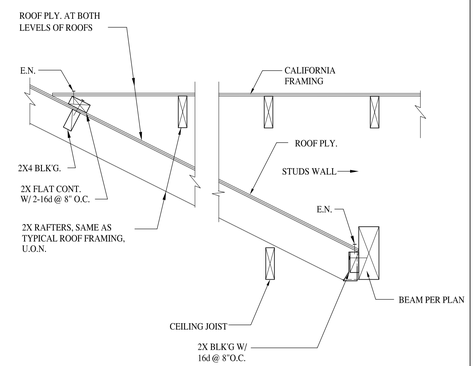

CALIFORNIA FRAMING 1

GeoTrinity Consultants, Inc.
7770 Pardee Lane, Suite 101
Oakland, CA 94621
www.geotrinity.com
Email: info@geotrinity.com
Tel : 510-383-9950
Fax: 510-383-9957

REGISTERED PROFESSIONAL ENGINEER YIF-RONG YANG No. C 48655 Exp. 06/30/22 CIVIL STATE OF CALIFORNIA

Jerry Yang, P.E.; G.E.

Owners:
Lucas Nguyen & Margaret Pham
c/o Ellte Realty Services

2787 Moorpark Ave.
San Jose, CA 95128

No.		Date
1	Rev1: 2/28/2022	

Project Name and Address

NGUYEN RESIDENCE

16190 Wood Acres Road
Los Gatos, CA

Sheet Title

SECOND FLOOR FRAMING PLAN AND DETAILS

Project	GE 2681	Sheet
Date	8/12/2019	S1.3
Scale		

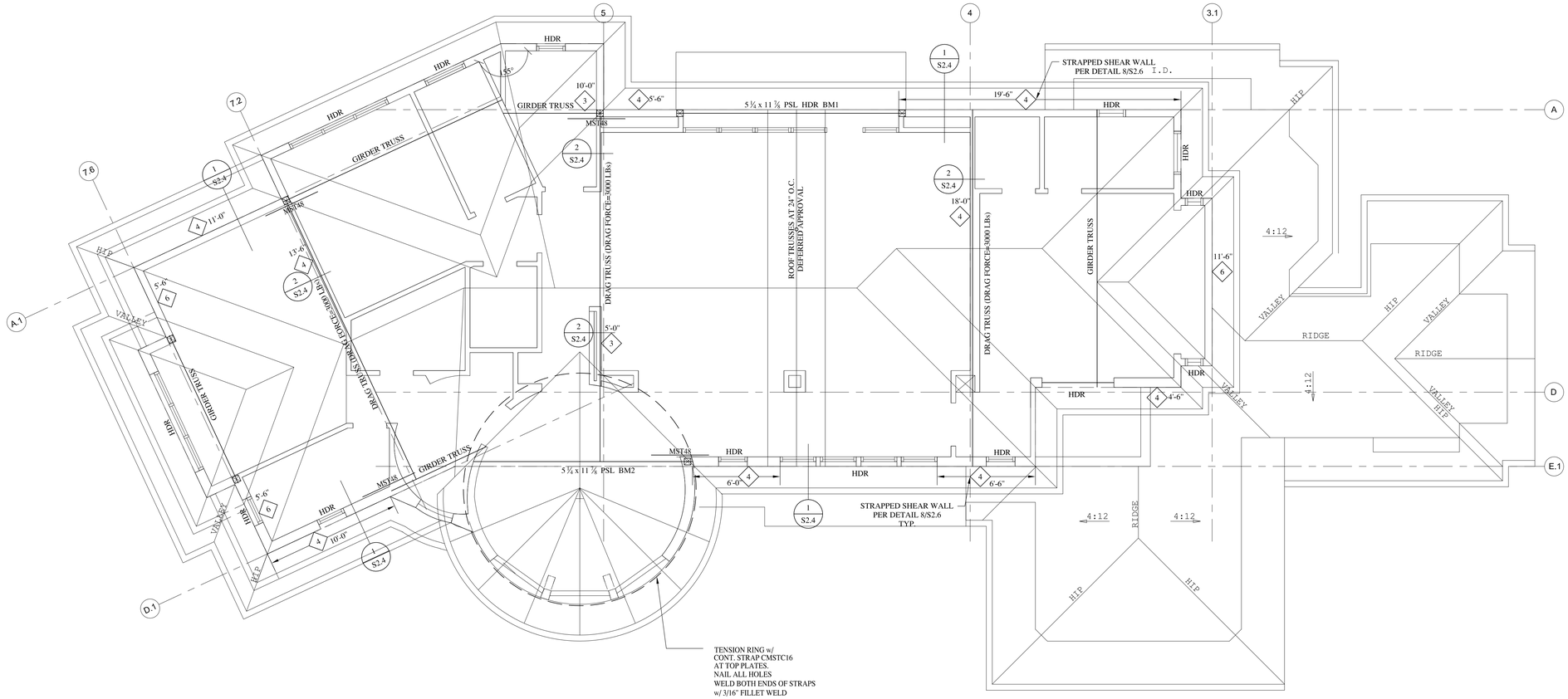

ROOF FRAMING PLAN

SCALE: ¼" = 1'-0"

ALL ROOF TRUSSES AT 24" O.C. TO BE DEFERRED APPROVAL
ROOF DEAD LOAD IS 22 PSF, LIVE LOAD IS 20 PSF

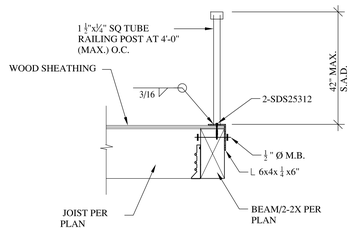

RAILING CONNECTION | 4

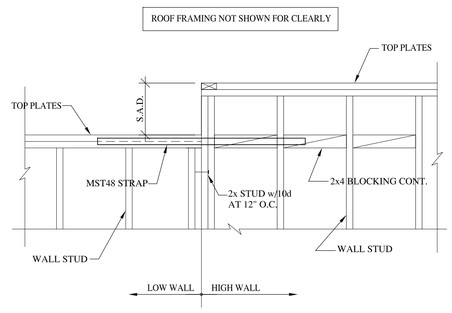

STUD WALL ELEVATION CHANGE | 3

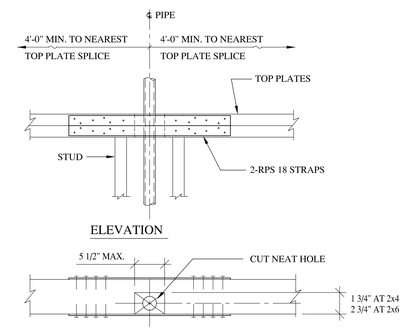

NOT ALL NAILS SHOWN
FOR CLARITY

STRENGTHENING PENETRATION THROUGH WALL | 2

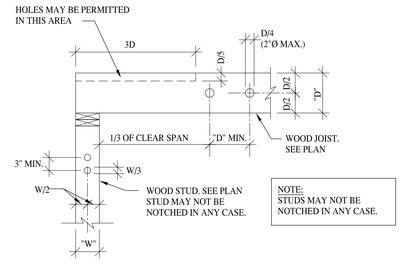

TYP. HOLES IN WOOD JOISTS & STUDS | 1

GeoTrinity Consultants, Inc.
7770 Pardee Lane, Suite 101
Oakland, CA 94621
www.geotrinity.com
Email: info@geotrinity.com
Tel : 510-383-9950
Fax: 510-383-9957

REGISTERED PROFESSIONAL ENGINEER
YIH-RONG YANG
No. C 48655
Exp. 06/30/22
CIVIL
STATE OF CALIFORNIA

Jerry Yang, P.E.; G.E.

Owners:
Lucas Nguyen & Margaret Pham
c/o Ellte Realty Services

2787 Moorpark Ave.
San Jose, CA 95128

No.	Rev1: 2/28/2022	Date

Project Name and Address

NGUYEN RESIDENCE

16190 Wood Acres Road
Los Gatos, CA

Sheet Title

ROOF FRAMING PLAN AND DETAILS

Project	GE 2681	Sheet
Date	8/12/2019	S1.4
Scale		

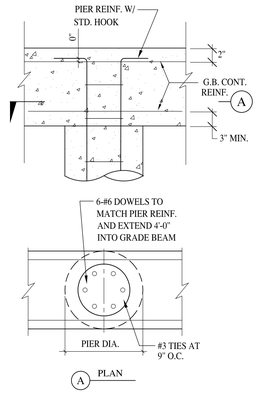

DRILLED PIER AT GRADE BEAM | 10

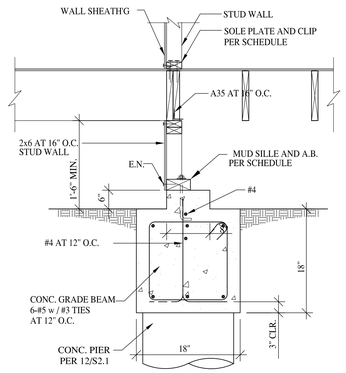

1NTERIOR CONC. WALL FOOTING | 7

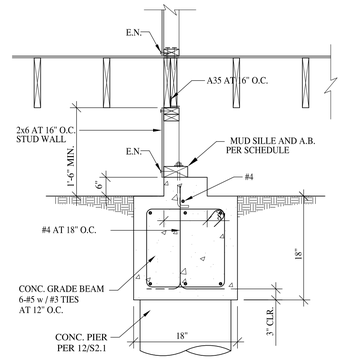

1NTERIOR CONC. WALL FOOTING | 4

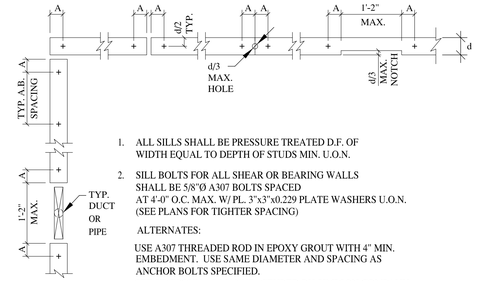

1. ALL SILLS SHALL BE PRESSURE TREATED D.F. OF WIDTH EQUAL TO DEPTH OF STUDS MIN. U.O.N.
2. SILL BOLTS FOR ALL SHEAR OR BEARING WALLS SHALL BE 5/8"Ø A307 BOLTS SPACED AT 4'-0" O.C. MAX. W/ PL. 3"x3"x0.229 PLATE WASHERS U.O.N. (SEE PLANS FOR TIGHTER SPACING)

   ALTERNATES:

   USE A307 THREADED ROD IN EPOXY GROUT WITH 4" MIN. EMBEDMENT. USE SAME DIAMETER AND SPACING AS ANCHOR BOLTS SPECIFIED.

   SET-XP EPOXY AS MANUFACTURED BY SIMPSON COMPANY OR AN APPROVED EQUAL PRODUCT. FOLLOW MANUFACTURER'S INSTALLATION REQUIREMENTS.
3. SILL BOLTS SHALL HAVE A MINIMUM EMBEDMENT OF 7 INCHES
4. EACH SILL PIECE SHALL HAVE 2 BOLTS MINIMUM. LOCATE BOLTS CLEAR OF STUDS AND POSTS.
5. "A" DIMENSION SHALL BE 5-1/4" MINIMUM AND 1'-0" MAXIMUM A HD TIE-DOWN BOLT CAN SUBSTITUTE FOR AN ANCHOR BOLT IF IT IS INSTALLED WITH AN ADDITIONAL NUT AND PLATE WASHER SNUG TIGHT TO THE MUD SILL.

TYPICAL ANCHOR BOLT REQUIREMENTS | 1

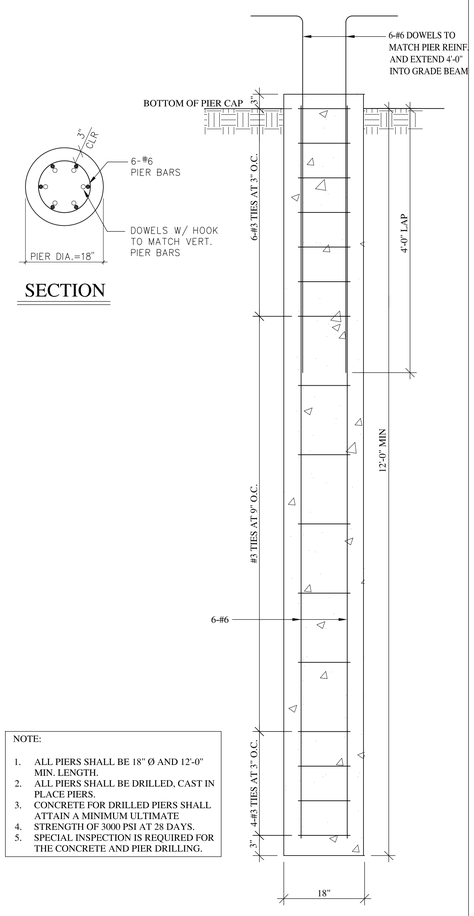

SECTION

NOTE:

1. ALL PIERS SHALL BE 18" Ø AND 12'-0" MIN. LENGTH.
2. ALL PIERS SHALL BE DRILLED, CAST IN PLACE PIERS.
3. CONCRETE FOR DRILLED PIERS SHALL ATTAIN A MINIMUM ULTIMATE
4. STRENGTH OF 3000 PSI AT 28 DAYS.
5. SPECIAL INSPECTION IS REQUIRED FOR THE CONCRETE AND PIER DRILLING.

CONCRETE DRILLED PIER DETAIL | 12

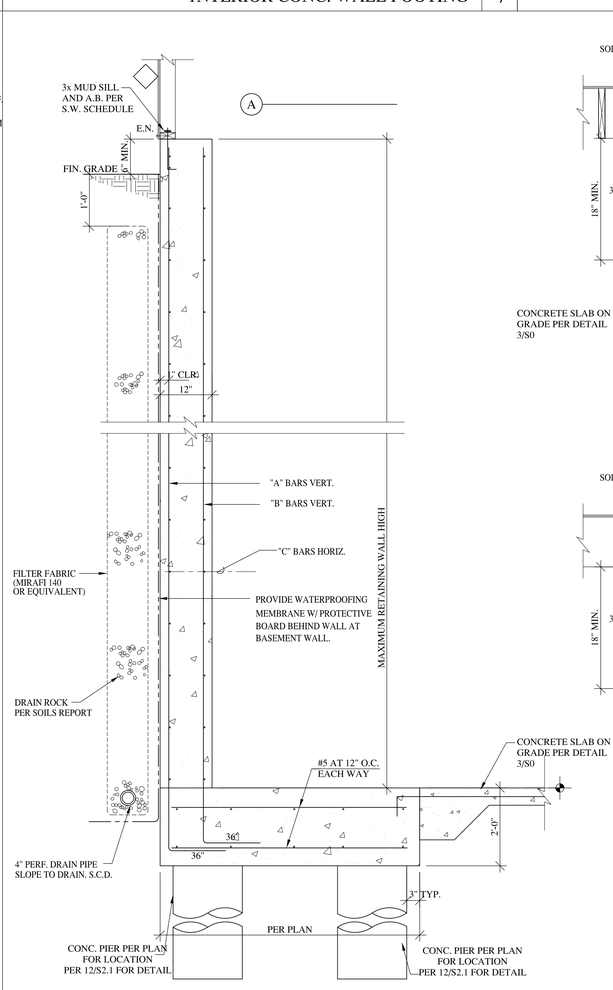

CONCRETE WALL BELOW GRADE | 6

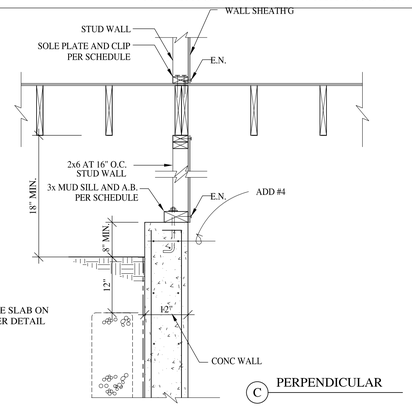

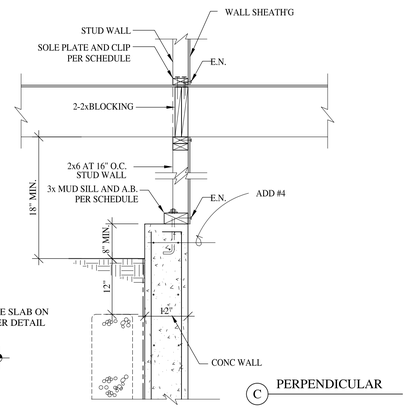

RETAINING WALL SCHEDULE

H (MAX.)	"A" BARS (VERTICAL)	"B" BARS (VERTICAL)	"C" BARS (HORIZONTAL)
6'-6"	#5 AT 12" O.C.	#5 AT 12" O.C.	#4 AT 12" O.C.
8'-6"	#6 AT 12" O.C.	#5 AT 12" O.C.	#4 AT 12" O.C.
10'-6"	#6 AT 9" O.C.	#5 AT 12" O.C.	#4 AT 12" O.C.

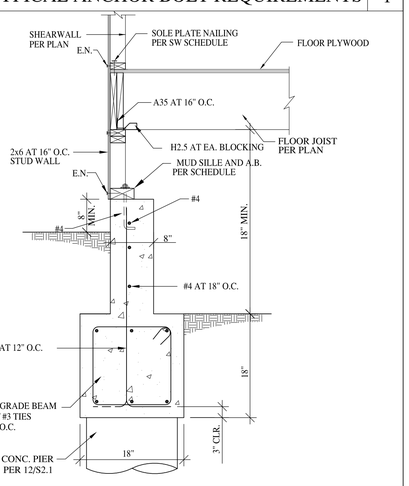

EXTERIOR CONC. WALL FOOTING | 2

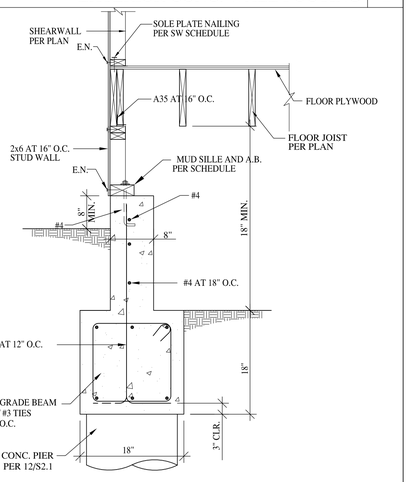

EXTERIOR CONC. WALL FOOTING | 3

GeoTrinity Consultants, Inc.
7770 Pardee Lane, Suite 101
Oakland, CA 94621
www.geotrinity.com
Email: info@geotrinity.com
Tel : 510-383-9950
Fax: 510-383-9957

REGISTERED PROFESSIONAL ENGINEER
YIH-RONG YANG
No. C 48655
Exp. 06/30/22
STATE OF CALIFORNIA CIVIL

Jerry Yang, P.E.; G.E.

Owners:
Lucas Nguyen & Margaret Pham
c/o Ellte Realty Services

2787 Moorpark Ave.
San Jose, CA 95128

No.	Rev1: 2/28/2022	Date

Project Name and Address

NGUYEN RESIDENCE

16190 Wood Acres Road
Los Gatos, CA

Sheet Title

STRUCTURAL DETAILS

Project	GE 2681	Sheet
Date	8/12/2019	S2.1
Scale		

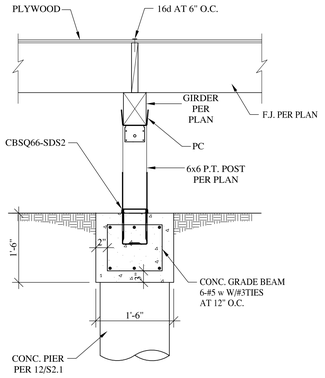

POST ON GRADE BEAM | 10

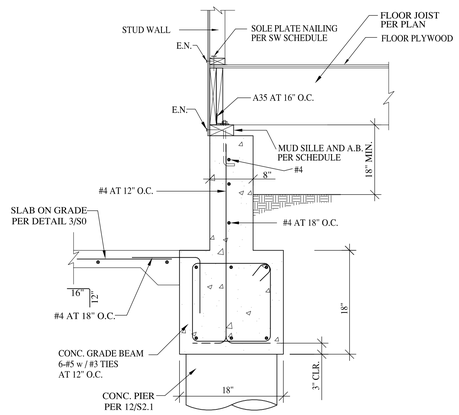

EXTERIOR CONC. WALL FOOTING | 7

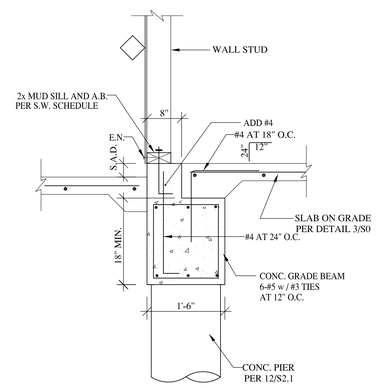

WALL FOOTING AT PORCH | 4

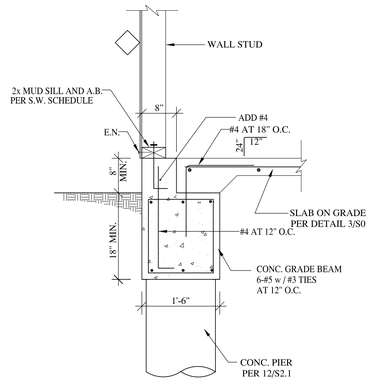

EXTERIOR WALL FOOTING | 1

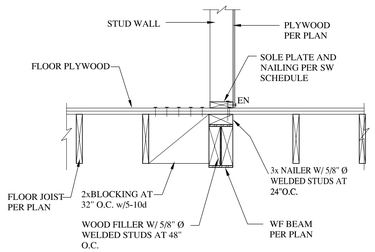

SHEAR WALL ON WF BEAM | 11

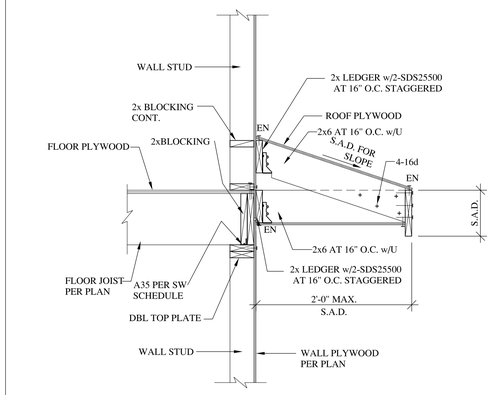

LOWER ROOF AT EXTERIOR WALL | 8

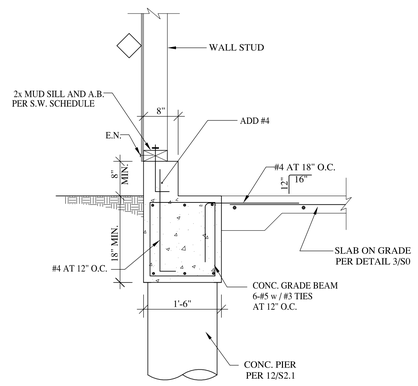

EXTERIOR WALL FOOTING AT GARAGE | 5

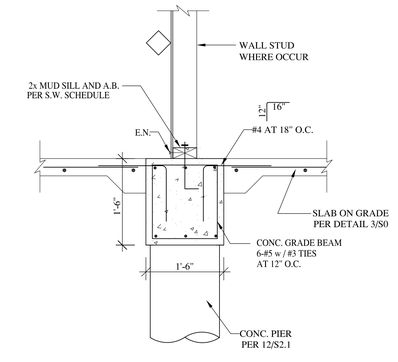

INTERIOR WALL FOOTING | 2

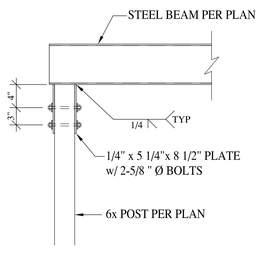

STEEL BEAM TO POST CONNECTION | 12

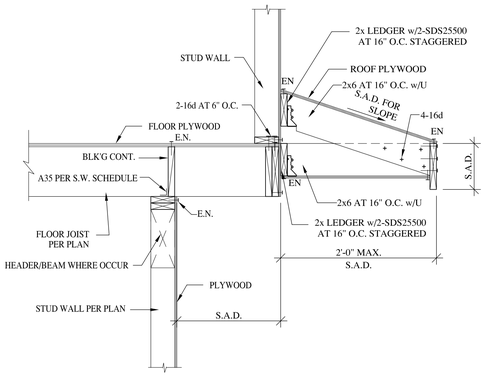

PER DETAIL 11/S2.4 FOR MORE INFOR. NOT SHOWN

LOWER ROOF AT CANTILEVERED FLOOR | 9

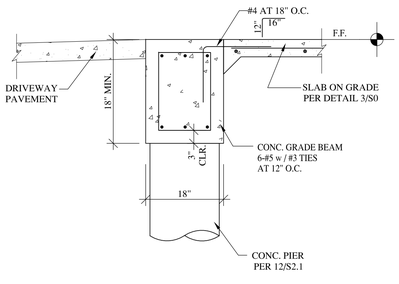

FOOTING AT GARAGE ENTRY | 6

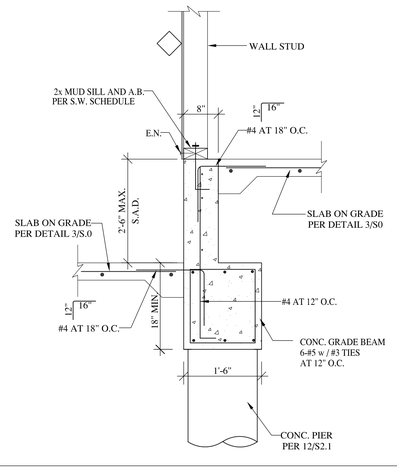

GARAGE WALL FOOTING | 3

GeoTrinity Consultants, Inc.
7770 Pardee Lane, Suite 101
Oakland, CA 94621
www.geotrinity.com
Email: info@geotrinity.com
Tel : 510-383-9950
Fax: 510-383-9957

REGISTERED PROFESSIONAL ENGINEER JYH-RONG YANG No. C 48655 Exp. 06/30/22 CIVIL STATE OF CALIFORNIA

Jerry Yang, P.E.; G.E.

Owners:
Lucas Nguyen & Margaret Pham
c/o Ellte Realty Services

2787 Moorpark Ave.
San Jose, CA 95128

No.	Rev1: 2/28/2022	Date

Project Name and Address

NGUYEN RESIDENCE

16190 Wood Acres Road
Los Gatos, CA

Sheet Title

STRUCTURAL DETAILS

Project	GE 2681	Sheet
Date	8/12/2019	S2.2
Scale		

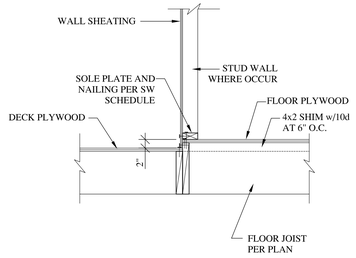

EXTERIOR WALL ON FLOOR JOIST | 10

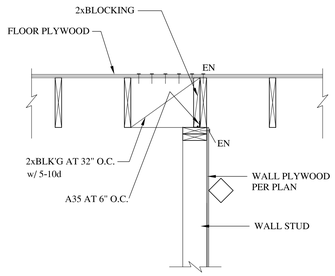

INTERIOR WALL PARALLEL TO JOIST | 7

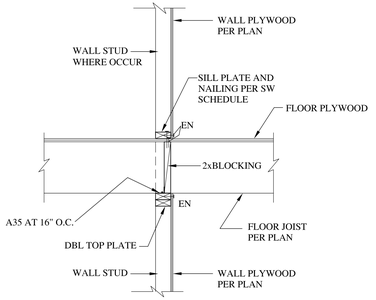

FLOOR JOIST PERP. TO INTERIOR WALL | 4

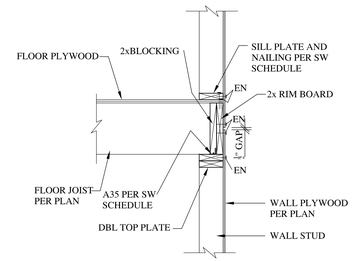

FLOOR JOIST PERP. TO EXTERIOR WALL | 1

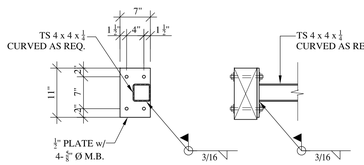

ATTACHMENT AT PSL BEAM | 11

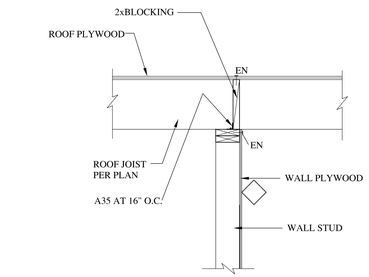

INTERIOR WALL PERPENDICULAR TO JOIST | 8

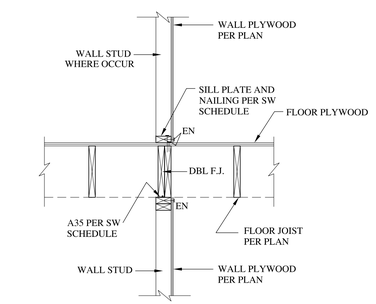

FLOOR JOIST PARA. TO INTERIOR WALL | 5

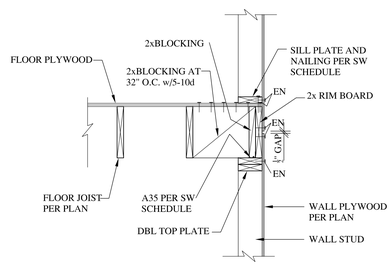

FLOOR JOIST PAPA. TO EXTERIOR WALL | 2

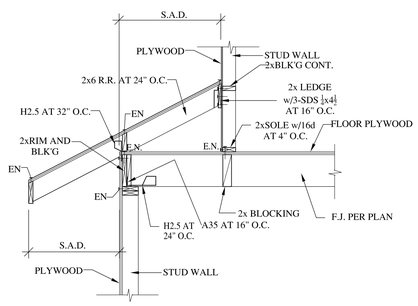

FLOOR PLYWOODING AT LOW ROOF | 12

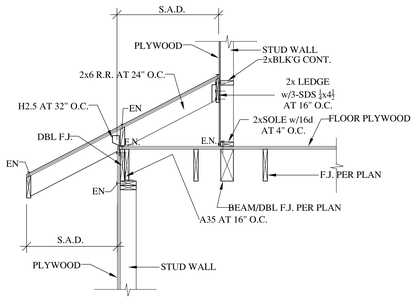

FLOOR PLYWOODING AT LOW ROOF | 9

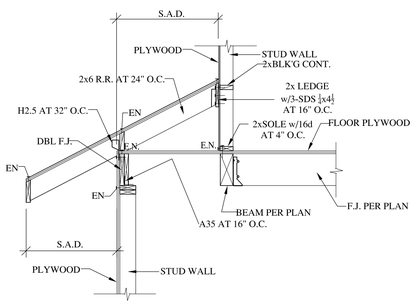

FLOOR PLYWOODING AT LOW ROOF | 6

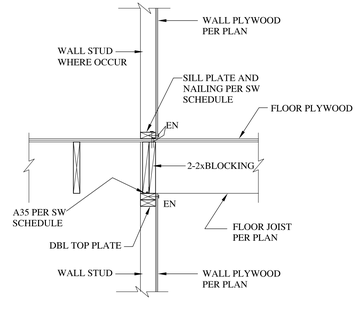

FLOOR JOIST AT INTERIOR WALL | 3

GeoTrinity Consultants, Inc.
7770 Pardee Lane, Suite 101
Oakland, CA 94621
www.geotrinity.com
Email: info@geotrinity.com
Tel : 510-383-9950
Fax: 510-383-9957

REGISTERED PROFESSIONAL ENGINEER YIH-RONG YANG No. C 48655 Exp. 06/30/22 CIVIL STATE OF CALIFORNIA

Jerry Yang, P.E.; G.E.

Owners:
Lucas Nguyen & Margaret Pham
c/o Ellte Realty Services

2787 Moorpark Ave.
San Jose, CA 95128

No.		Date
1	Rev1: 2/28/2022	

Project Name and Address

NGUYEN RESIDENCE

16190 Wood Acres Road
Los Gatos, CA

Sheet Title

STRUCTURAL DETAILS

Project	GE 2681	Sheet	S2.3
Date	8/12/2019		
Scale			

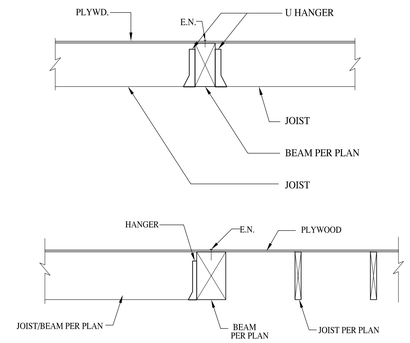

U HANGER FOR 2x D.F. JOIST;
BA HANGER FOR I BEAM JOIST;
HU HANGER FOR 4x AND GREATER D.F. BEAM;
BA HANGER FOR 3 1/2 x AND LESS PSL MEMBER;
HGLTV HANGER FOR 5 1/4 x AND GREATER PSL MEMBERS.
TYPICAL. U.O.N.

JOIST TO BEAM | 10

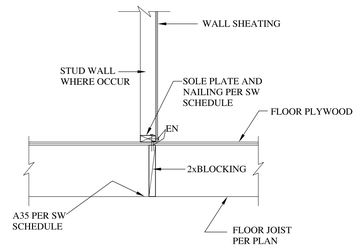

BEARING WALL ON FLOOR JOIST | 7

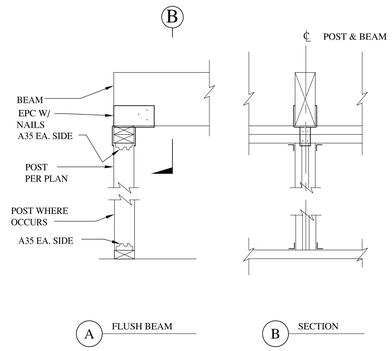

TYPICAL BEAM TO POST CONNECTION | 4

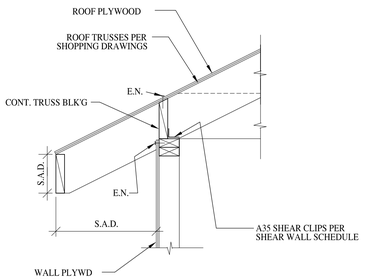

ROOF TRUSSES AT EXTERIOR WALL | 1

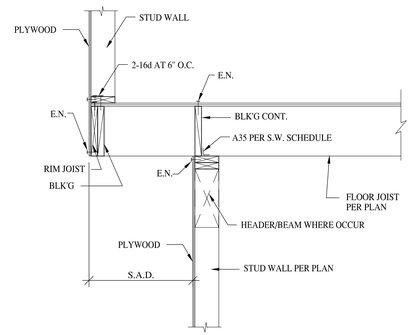

CANTILEVERED FLOOR | 11

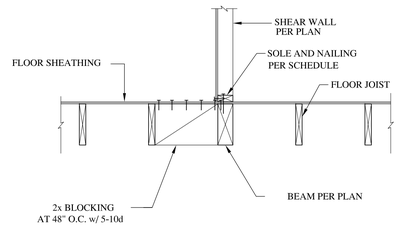

SHEAR WALL AT BEAM | 8

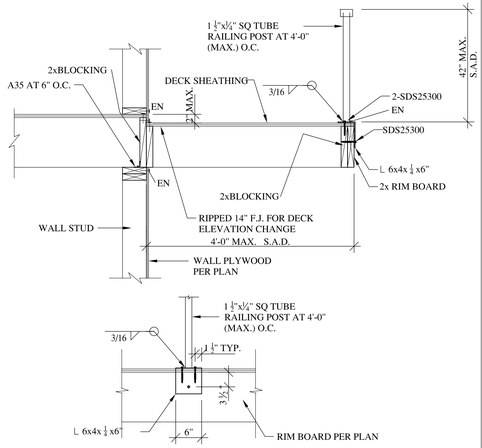

DECK FRAMING AT EXTERIOR WALL | 5

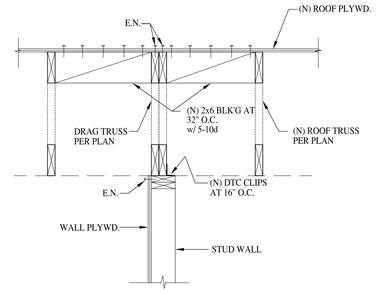

ROOF TRUSS PAPA. TO INTERIOR SHEAR WALL | 2

MAX. OPENING WIDTH	EXTERIOR WALL				INTERIOR WALL		
	BEARING STUD	KING STUD	MIN. HEADER SIZE(1)	FRAMING CLIPS	BEARING STUD	KING STUD	MIN. HEADER SIZE
4'-0"	2xSW	2xSW	SWx6	NONE	2xSW	2xSW	SWx6
6'-0"	2xSW	2xSW	SWx8	NONE	2xSW	2xSW	SWx8
8'-0"	(2)2xSW	(2)2xSW	SWx10	A35S WHERE SHOWN	2xSW	2xSW	SWx10
10'-0"	(2)2xSW	(2)2xSW	SWx12	A35S WHERE SHOWN	2xSW	2xSW	SWx12
12'-0"	(2)2xSW	(2)2xSW	SWx14	A35S WHERE SHOWN	(2)2xSW	2xSW	SWx14
16'-0"	(2)2xSW	(2)2xSW	SWx12 PSL	A35S WHERE SHOWN	-	-	-

NOTES

1. UNLESS OTHERWISE NOTED ON PLANS
2. USE CBC TABLE 2304.9.1 FOR OTHER NAILING REQUIREMENTS NOT NOTED.
3. SW=STUD WIDTH

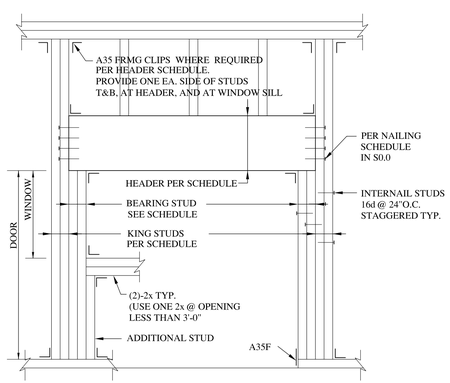

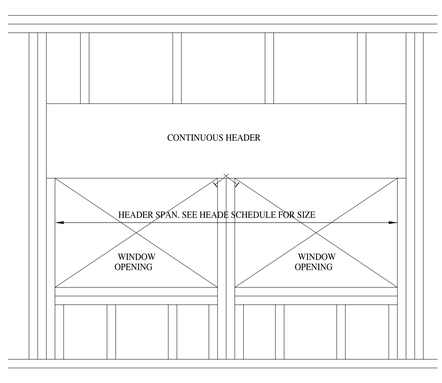

FRAMING OPENINGS IN BEARING WALLS, TYP. | 6

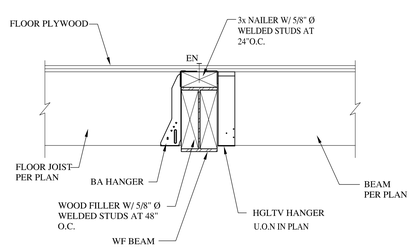

FLOOR JOIST/BEAM AT WF BEAM | 3

GeoTrinity Consultants, Inc.
7770 Pardee Lane, Suite 101
Oakland, CA 94621
www.geotrinity.com
Email: info@geotrinity.com
Tel : 510-383-9950
Fax: 510-383-9957

REGISTERED PROFESSIONAL ENGINEER YIH-RONG YANG No. C 48655 Exp. 06/30/22 CIVIL STATE OF CALIFORNIA

Jerry Yang, P.E.; G.E.

Owners:
Lucas Nguyen & Margaret Pham
c/o Ellte Realty Services

2787 Moorpark Ave.
San Jose, CA 95128

No.		Date
	1 Rev1: 2/28/2022	

Project Name and Address

NGUYEN RESIDENCE

16190 Wood Acres Road
Los Gatos, CA

Sheet Title

STRUCTURAL DETAILS

Project	GE 2681	Sheet	S2.4
Date	8/12/2019		
Scale			

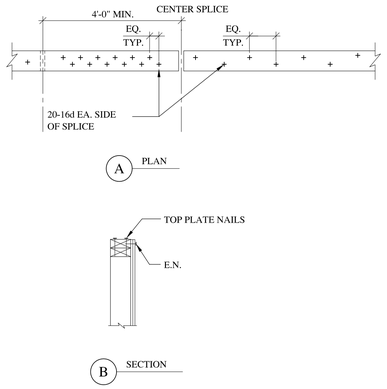

TOP PLATE SPLICE AT SHEAR WALLS, TYP. | 10

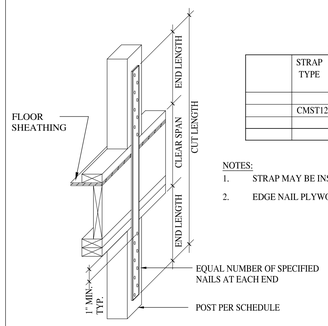

TIEDOWN SCHEDULE

	STRAP TYPE	END LENGTH MINIMUM	NAILING REQ'D AT EACH END LENGTH	ALLOW UPLIFT	POST SIZE MIN.
	CMST12	33"	37-16d	9215#	2-2x

NOTES:
1. STRAP MAY BE INSTALLED OVER PLYWOOD.
2. EDGE NAIL PLYWOOD TO STRAP POST.

VERTICAL TIEDOWN AT FLOOR | 7

SHEARWALL SYMBOL (1)(2)	SOLE PLATE NAILING, BOLTING	SHEAR CLIP (3) (5)	ANCHOR BOLT (5)	SHEAR CLIP (3)	SOLE PLATE	MUD SILL	
6	16d AT 4" O.C.	A35 AT 16" O.C.	5/8" Ø AT 4'-0" O.C.	A35 AT 16" O.C.	2x	2x	
4 (6)	SDS 1/4x4 1/2 AT 6" O.C.	A35 AT 10" O.C.	5/8" Ø AT 2'-0" O.C.	A35 AT 10" O.C.	2x	3x	
3 (6)	SDS 1/4x4 1/2 AT 6" O.C.	A35 AT 8" O.C.	5/8" Ø AT 1'-6" O.C.	A35 AT 8" O.C.	2x	3x	
2 (6)	SDS 1/4x4 1/2 AT 4" O.C.	A35 AT 6" O.C.	5/8" Ø AT 1'-4" O.C.	A35 AT 6" O.C.	2x	3x	
(7)	SDS 1/4x4 1/2 AT 2 ½ " O.C.	A35 AT 4 ½ " O.C.	3/4" Ø AT 1'-0" O.C.	A35 AT 4 ½ " O.C.	2x	3x	
SW	SIMPSON STEEL STRONG-WALL	SEE SIMPSON MANUFACTURER FOR SPECIFICATIONS					

NOTE: ALL FRAMED EXTERIOR WALL SHALL BE SHEATHED WITH SHEAR WALL TYPE 6 UNLESS OTHERWISE NOTED

FOOTNOTES:
1. USE 10d SHORTS (2-1/8" LONG) COMMON WIRE NAILS U.O.N.
2. ◇ NUMBER SHOWN IN SYMBOL REPRESENTS PLYWOOD PANEL EDGE NAILING IN INCHES.
3. USE A35F OR LTP4 AS ALTERNATE TO A35 U.O.N.
4. SEE DETAIL 1/S2.1 FOR ANCHOR BOLT AND SILL DETAIL.
5. SOLE PLATE NAILING AND SHEAR CLIPS AT FLOOR SHALL BE SPACED PER SCHEDULE FOR SHEAR WALLS BELOW FLOOR.
6. EDGE FRAMING SHALL BE 3X OR WIDER AND NAILS SHALL BE STAGGERED AT ADJOINING PANEL EDGES.
7. PANEL EDGES SHALL BE OFFSET TO FALL ON DIFFERENT FRAMING MEMBER.

SHEARWALL SCHEDULE | 1

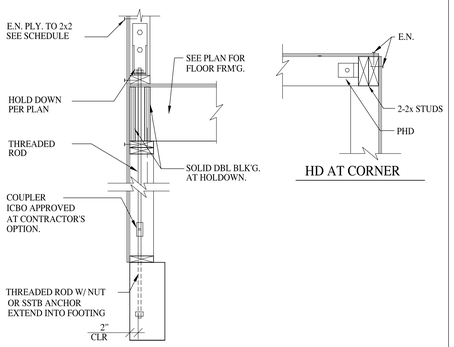

AT GRADE BEAM

HD AT CORNER

HD TYPE	MAX. ALLOW. LOAD	ANCHOR BOLT	MIN. EMBED (le)	MIN. (1) POST SIZE
HDU4	4560#	5/8" DIA	18"	2- 2x

NOTES:
(1) USE POST PER PLAN
(2) SEE SIMPSON CATALOG FOR ANCHOR BOLTS PLACEMENT IN CONC. WALL.

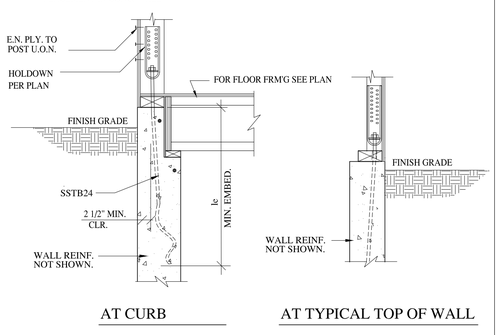

AT CURB

AT TYPICAL TOP OF WALL

HOLDOWN AT CONCRETE FOOTING | 12

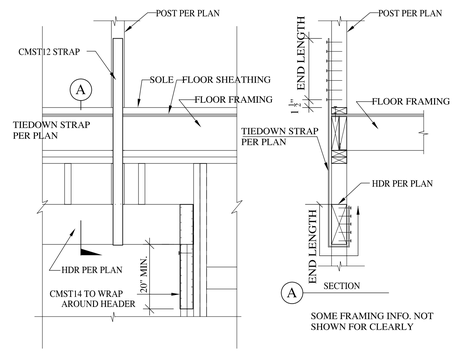

TYPICAL POSTS ON HEADER | 8

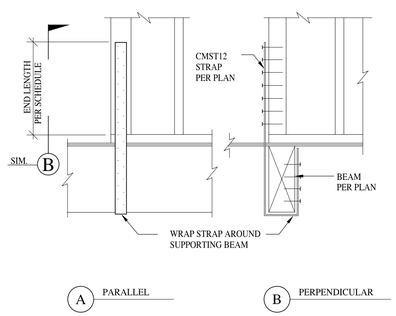

STRAP AT FLOOR BEAM | 9

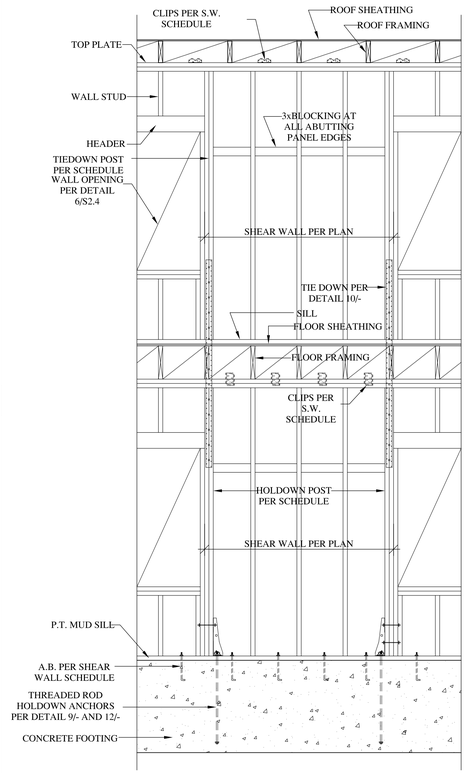

STACKED SHEARWALL

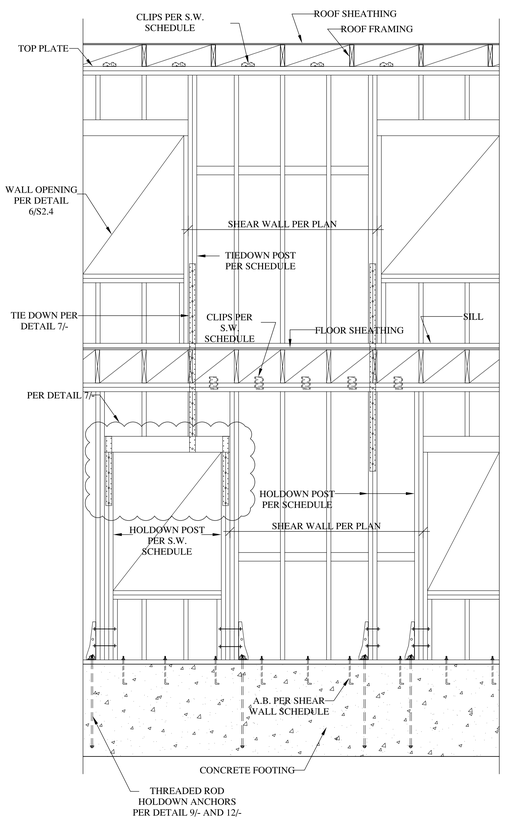

OFFSET SHEARWALL

TYPICAL SHEARWALL SCHEMATIC | 3

GeoTrinity Consultants, Inc.
7770 Pardee Lane, Suite 101
Oakland, CA 94621
www.geotrinity.com
Email: info@geotrinity.com
Tel : 510-383-9950
Fax: 510-383-9957

REGISTERED PROFESSIONAL ENGINEER
YIH-RONG YANG
No. C 48655
Exp. 06/30/22
CIVIL
STATE OF CALIFORNIA

Jerry Yang, P.E.; G.E.

Owners:
Lucas Nguyen & Margaret Pham
c/o Ellte Realty Services

2787 Moorpark Ave.
San Jose, CA 95128

No.		Date
1	Rev1: 2/28/2022	

Project Name and Address

NGUYEN RESIDENCE

16190 Wood Acres Road
Los Gatos, CA

Sheet Title

STRUCTURAL DETAILS

Project	GE 2681	Sheet
Date	8/12/2019	S2.5
Scale		

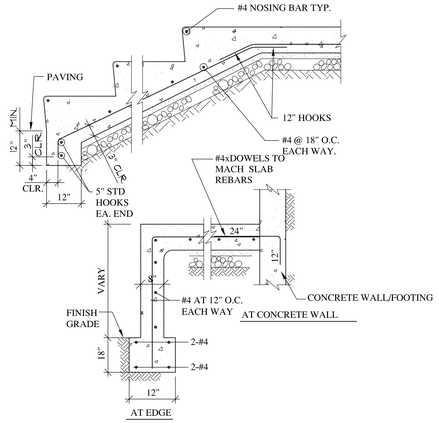

S.A.D. FOR DIMENSION AND ELEVATION

CONCRETE STEP DETAIL | 10

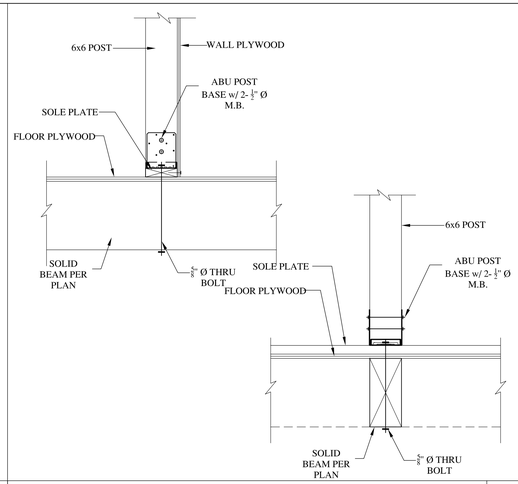

WOOD POST ON BEAM | 7

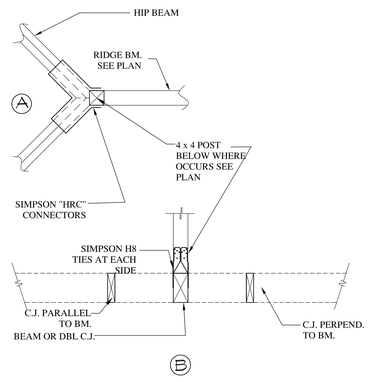

TYPICAL RIDGE CONNECTION | 4

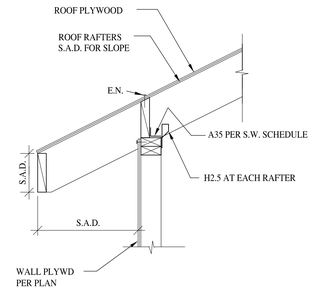

EXTERIOR WALL PERPENDICULAR TO JOIST | 1

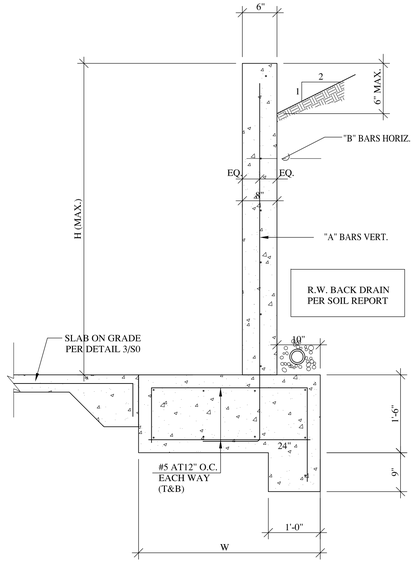

RETAINING WALL SCHEDULE

H (MAX.)	"A" BARS (VERTICAL)	"B" BARS (HORIZONTAL)	W (MIN.)
4'-6"	#5 AT 12" O.C.	#4 AT 12" O.C.	3'-6"
2'-6"	#4 AT 12" O.C.	#4 AT 12" O.C.	2'-6"

SITE RETAINING WALL | 12

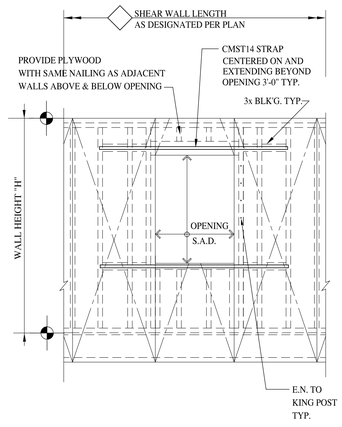

STRAPPED SHEAR WALL | 8

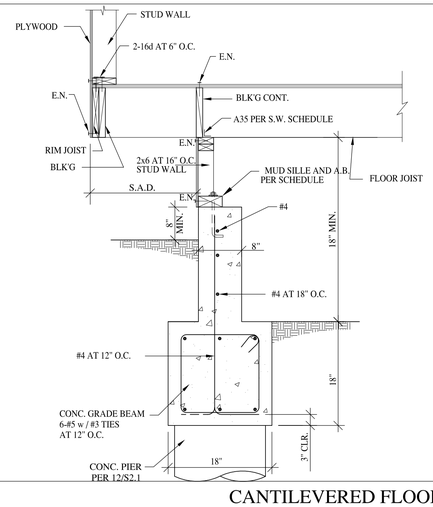

CANTILEVERED FLOOR | 5

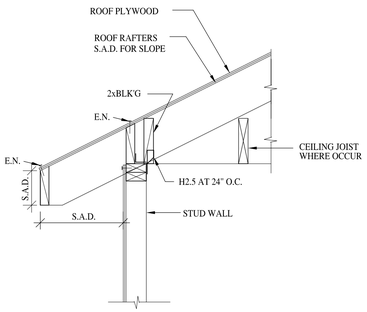

EXTERIOR WALL PARALLEL TO JOIST | 2

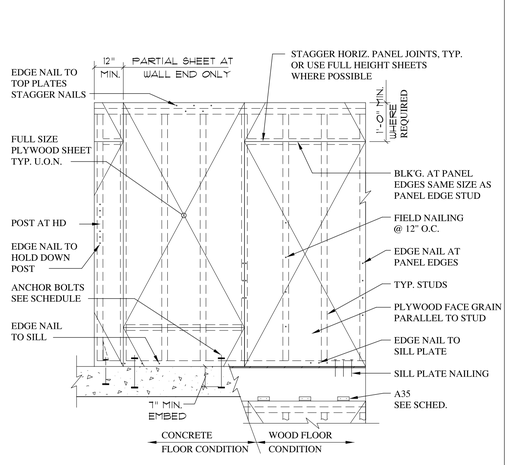

SHEAR WALL ELEVATIONS | 9

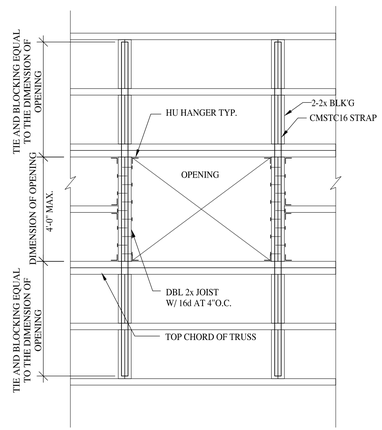

OPENING AT ROOF/FLOOR | 6

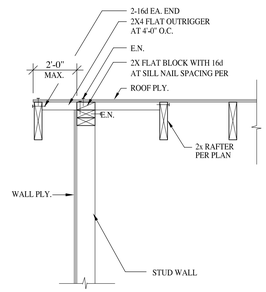

BALLOON FRAMED GABLE WALL | 3

GeoTrinity Consultants, Inc.
7770 Pardee Lane, Suite 101
Oakland, CA 94621
www.geotrinity.com
Email: info@geotrinity.com
Tel : 510-383-9950
Fax: 510-383-9957

REGISTERED PROFESSIONAL ENGINEER YIH-RONG YANG No. C 48655 Exp. 06/30/22 CIVIL STATE OF CALIFORNIA

Jerry Yang, P.E.; G.E.

Owners:
Lucas Nguyen & Margaret Pham
c/o Ellte Realty Services

2787 Moorpark Ave.
San Jose, CA 95128

No.	Rev1: 2/28/2022	Date

Project Name and Address

NGUYEN RESIDENCE

16190 Wood Acres Road
Los Gatos, CA

Sheet Title

STRUCTURAL DETAILS

Project	GE 2681	Sheet
Date	8/12/2019	S2.6
Scale		

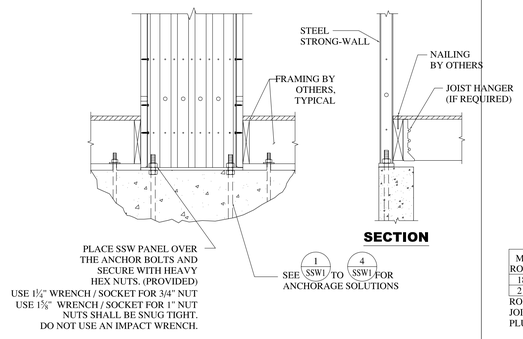

10 STRONG WALL AT 2ND FLOOR WOOD FRAMING 7

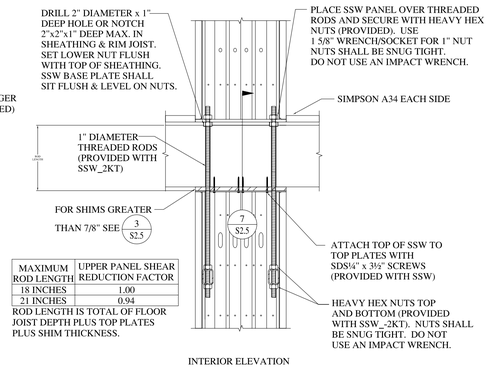

MAXIMUM ROD LENGTH	UPPER PANEL SHEAR REDUCTION FACTOR
18 INCHES	1.00
21 INCHES	0.94

ROD LENGTH IS TOTAL OF FLOOR JOIST DEPTH PLUS TOP PLATES PLUS SHIM THICKNESS.

INTERIOR ELEVATION

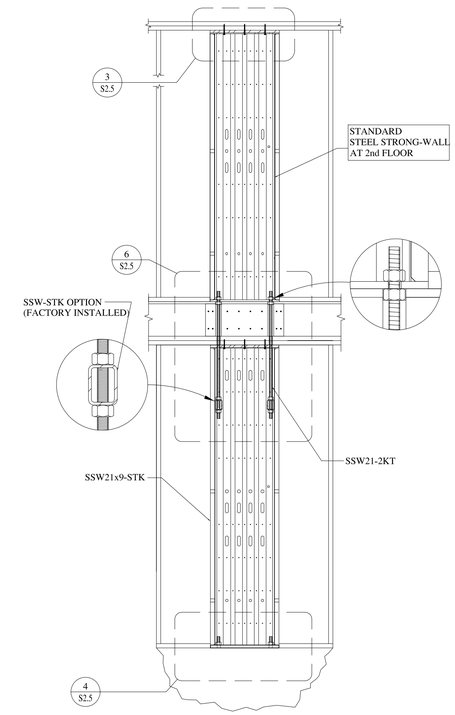

TWO-STORY STACKED STRONG WALL 2

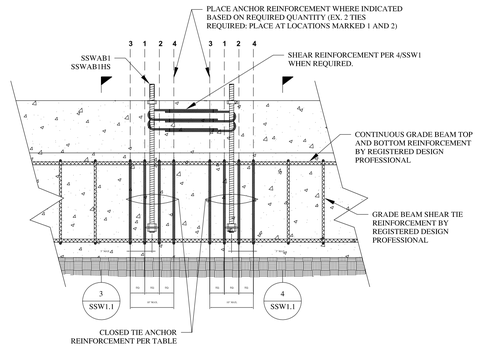

11 18" AND 24" SSW A.B. IN GRADE BEAM 8

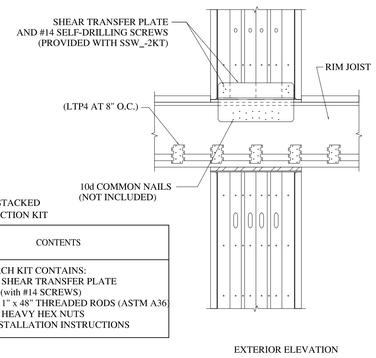

TWO-STORY STACKED WALL CONNECTION KIT

WALL WIDTH (in)	MODEL NO.	CONTENTS
15	SSW15-2KT	EACH KIT CONTAINS: (1) SHEAR TRANSFER PLATE (with #14 SCREWS) (2) 1" x 48" THREADED RODS (ASTM A36) (6) HEAVY HEX NUTS INSTALLATION INSTRUCTIONS
18	SSW18-2KT	
21	SSW21-2KT	
24	SSW24-2KT	

EXTERIOR ELEVATION

TWO-STORY STACKED FLOOR FRAMING 5

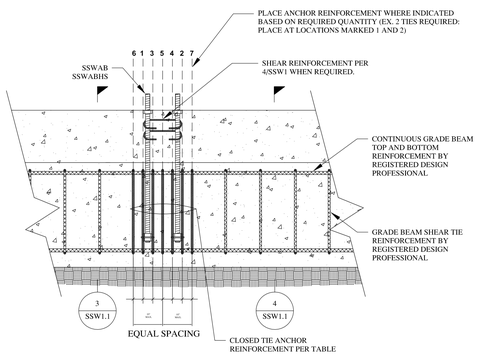

12 15" SSW A.B. IN GRADE BEAM 9

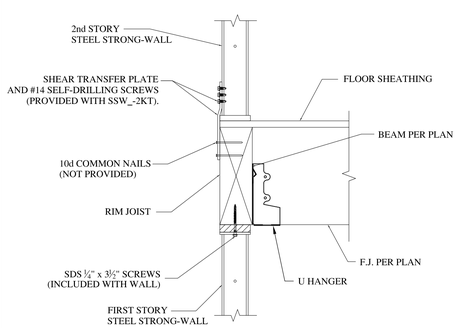

TWO-STORY STACKED FLOOR SECTION 6

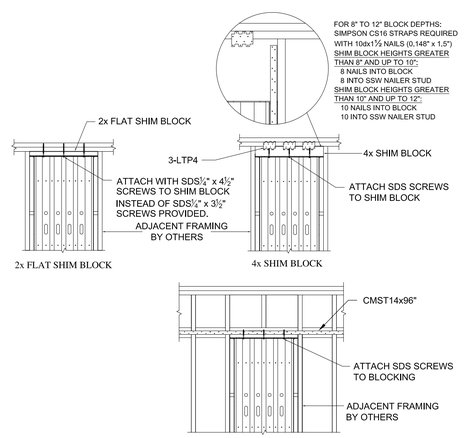

TOP OF WALL HEIGHT ADJUSTMENTS 3

GeoTrinity Consultants, Inc.
7770 Pardee Lane, Suite 101
Oakland, CA 94621
www.geotrinity.com
Email: info@geotrinity.com
Tel : 510-383-9950
Fax: 510-383-9957

REGISTERED PROFESSIONAL ENGINEER YIH-RONG YANG No. C 48655 Exp. 06/30/22 CIVIL STATE OF CALIFORNIA

Jerry Yang, P.E.; G.E.

Owners:
Lucas Nguyen & Margaret Pham
c/o Ellte Realty Services

2787 Moorpark Ave.
San Jose, CA 95128

No.		Date
1	Rev1: 2/28/2022	

Project Name and Address

NGUYEN RESIDENCE
16190 Wood Acres Road
Los Gatos, CA

Sheet Title

STRUCTURAL DETAILS

Project	GE 2681	Sheet
Date	8/12/2019	S2.7
Scale		

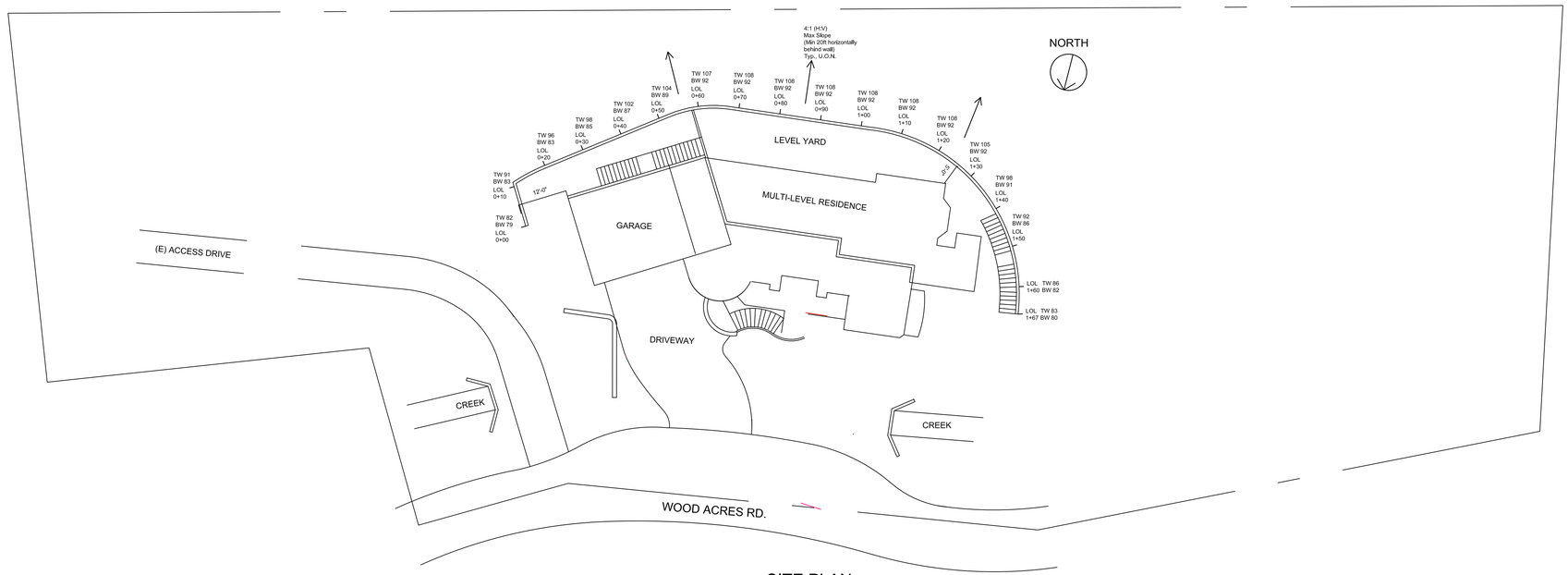

SITE PLAN

NOTES: 1. See Civil/Grading Plans for additional wall location & layout information

GENERAL NOTES:

1. All materials and workmanship shall be in accordance with the specifications provided and the requirements of the California Building Code (CBC) 2016 and the State of California Department of Transportation Standard Specifications for Road and Bridge Construction dated 2015.

2. The soil nail structures have been design in accordance with FWHA GEC No. 7 using SNAP2 design software

3. Reference Materials:
   a. Soil and Foundation Investigation by American Soil Testing dated April 8, 2016
   b. Conceptual Grading & Drainage Plan by Advanced Development dated April 12, 2018
   c. Architectural Site Plan by Louis Dorcich dated October 21, 2016

4. Soil Nail Design Parameters:

   Allowable Bond Stress: 6 PSI=1.36kips/ft
   Seismic Coefficient (kh): 0.245

5. The Contractor is responsible for verifying the accuracy of all dimensions for both existing and proposed work, and shall verify that required clearances are obtained prior to commencement of the work.

6. The Engineer bears no responsibility or liability for any settlement, movement, or damage of any kind that may occur to surrounding soils, existing building structures, or utilities due to retaining wall installation, deflection, removal, or other construction activities.

7. Excavation & Safety Notes:

   a. All work shall be performed in adherence to CalOSHA safety standards
   b. The Contractor is responsible for locating utilities
   c. The Contractor is responsible for survey control

SOIL NAIL WALL NOTES:

1. Nail Grout: f'c = 3000 psi minimum
2. Nail Bars: Epoxy Coated or sheathed and grouted #8 Grade 75 Bars. See elevations for bar lengths.

3. Layout of nails is as-shown. Adjustments may be made to accommodate field conditions as approved by the Engineer. Adjustments of up to one foot may be made without notifying the Engineer.

4. Testing: Proof Testing of the soil nails shall be performed on a minimum of 5 percent of the nails in accordance with the specifications. Maximum test loads are shown on the soil nail test schedule. Verification shall be performed at the locations indicated. A verification nail may take the place of a proof test nail for the purpose of satisfying the one test per 20 nail requirement. All test nails are sacrificial.

SHOTCRETE NOTES

1. Reinforced shotcrete: Rebar fy = 60 ksi
   WWF fy = 65 ksi
   Shotcrete f'c = 3250 psi

2. Unless noted otherwise, minimum shotcrete cover from face of shotcrete to face of any reinforcing shall be 2".

3. A shotcrete test panel shall be made for each day of shotcrete application. These panels shall be cored, and the cores shall be tested for compressive strength.

4. Minimum lap splice of steel reinforcement shall be as follows: Rebar: 48 Diameters
   WWF: 2 squares.

5. Minimum lap splice of geocomposite drainage shall be 12".

5. Geocomposite drain boards shall be secured to the slope in such a manner that prevents shotcrete from getting between the cut slope and the geocomposite drain.

6. The integrity of the geocomposite drain to the weephole connection shall be maintained while shotcreting.

7. Special inspection is required per CBC

STEELE ENGINEERING
Steele Engineering
1806 Belles Street, Suite 11B
San Francisco, Ca 94129
(415) 215-5193

RETAINING WALL PLAN AND DETAILS

16190 Wood Acres Road
Los Gatos, Ca

No.	Revision/Issue	Date

Project: Nguyen Residence
16190 Wood Acres Road
Los Gatos, CA

Date: September 17, 2018

Scale: As Noted
(Arch D sized sheet)

Sheet
RW0

Sheet 1 of 2

Steele Engineering

SOIL NAIL TEST SCHEDULE			
SOIL TYPE	DESIGN LOAD (Kips)	MAX. PROOF TEST LOAD (Kips)*	MAX. VERIFICATION TEST LOAD (kips)*
BEDROCK	13.6	20.4	27.2

* Based on 10' bonded length. If as-built length differs from this value, the Engineer shall be notified and will modify the test loads.

LEGEND:
- + SOIL NAIL
- ⊕ PROOF TEST SOIL NAIL
- ⚠ VERIFICATION TEST SOIL NAIL

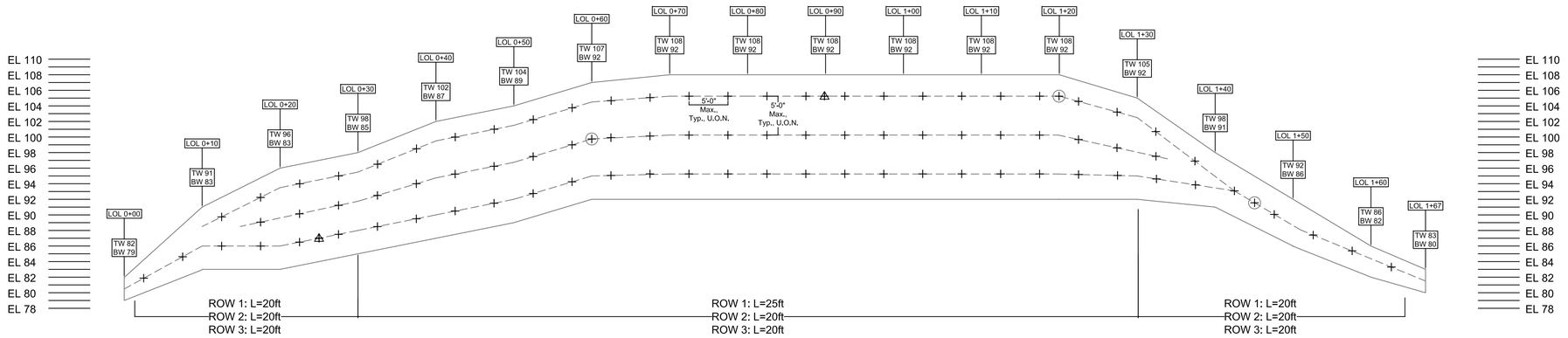

1/RW1 ELEVATION

1/8"=1'

NOTES: 1. "As-built" any modifications based on field conditions. Maximum nail spacing applies regardless of field conditions.

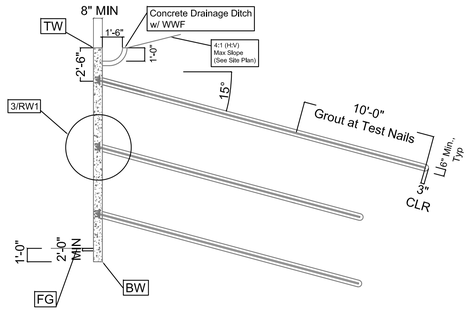

2/RW1 MAXIMUM SECTION

3/16"=1'

NOTES: 1. Centralizers 10' O.C. Max
2. All bars Grade 75 #8 Epoxy Coated or sheathed and grouted
3. Wall reinforcing not shown for clarity. See 3&5/RW1.

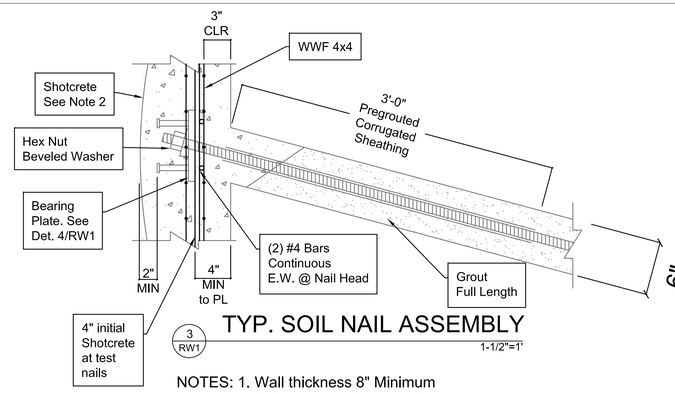

3/RW1 TYP. SOIL NAIL ASSEMBLY

1-1/2"=1'

NOTES: 1. Wall thickness 8" Minimum
2. Optional: sculpted and stained wall face
3. No studs, nut, washer for test plate assemble

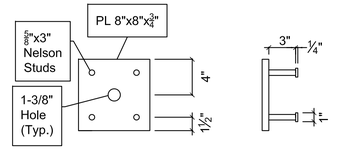

4/RW1 BEARING PLATE DETAIL

1-1/2"=1'

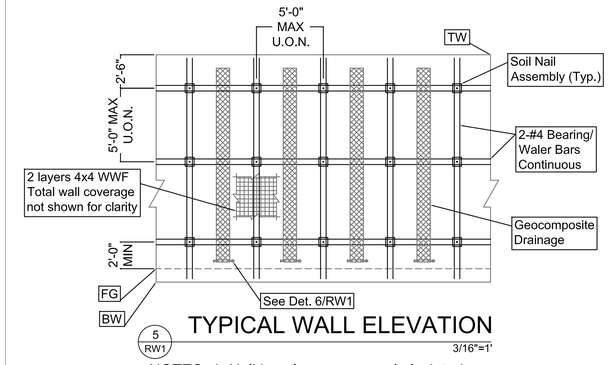

5/RW1 TYPICAL WALL ELEVATION

3/16"=1'

NOTES: 1. Nail locations may vary in isolated cases up to 12" from design location
2. Overlap geocomposite drains at bottom of wall to wrap around weep hole pipe.

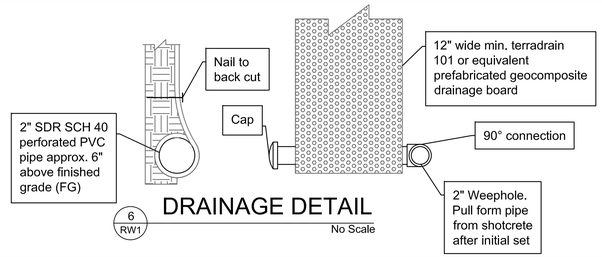

6/RW1 DRAINAGE DETAIL

No Scale

STEELE ENGINEERING
Steele Engineering
1806 Belles Street, Suite 11B
San Francisco, Ca 94129
(415) 215-5193

RETAINING WALL PLAN AND DETAILS

16190 Wood Acres Road
Los Gatos, Ca

No.	Revision/Issue	Date

Project: Nguyen Residence
16190 Wood Acres Road
Los Gatos, CA

Date: September 17, 2018

Scale: As Noted (Arch D sized sheet)

Sheet RW1

Sheet 2 of 2

Steele Engineering