CASA DE FRUTA
WATER SYSTEM IMPROVEMENTS
SANTA CLARA COUNTY, CA

AUGUST 2018

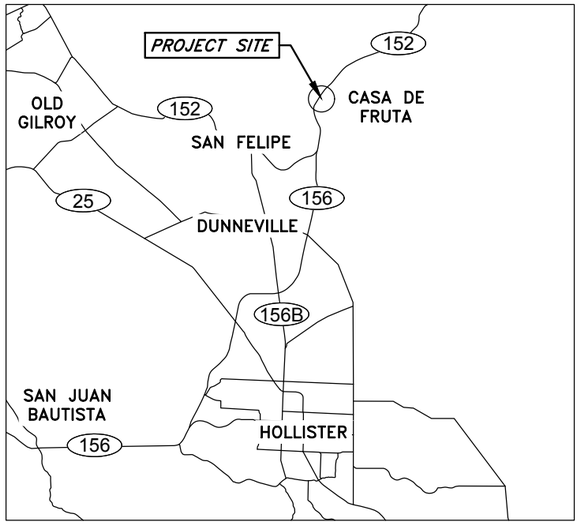

VICINITY MAP
NOT TO SCALE

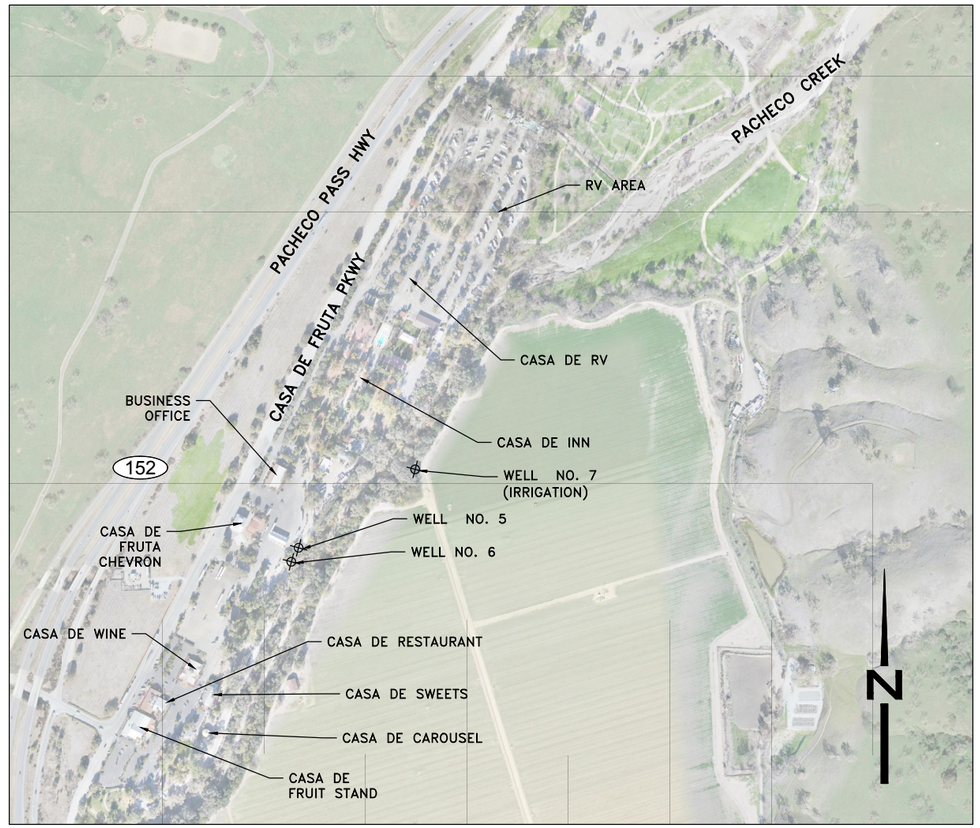

SITE MAP
NOT TO SCALE

SHEET INDEX

SHEET		TITLE
GENERAL		
1	G1.0	TITLE SHEET
2	G1.1	GENERAL NOTES, LEGEND, AND ABBREVIATIONS
3	G1.2	SHEET INDEX MAP
4	G1.3	OVERALL SITE MAP
CIVIL		
5	C1.0	PROPOSED PARTIAL SITE PLAN
6	C1.1	PLAN AND PROFILE STA 10+00 TO 21+00
7	C1.2	PLAN AND PROFILE STA 21+00 TO 32+00
8	C1.3	PLAN AND PROFILE STA 32+00 TO 43+00
9	C1.4	PLAN AND PROFILE STA 43+00 TO 54+00
10	C1.5	PLAN AND PROFILE STA 54+00 TO 60+90
11	C1.6	PLAN AND PROFILE STA 60+90 TO 66+00
CIVIL DETAILS		
12	CD1.0	DETAILS – 1
13	CD1.1	DETAILS – 2
MECHANICAL		
14	M1.0	TANK SITE PLAN
15	M1.1	TANK DETAILS AND SECTIONS – 1
16	M1.2	TANK DETAILS AND SECTIONS – 2

PROJECT DESCRIPTION:

CONSTRUCTION OF NEW WATER STORAGE TANK WITH USABLE CAPACITY OF 226,193 GALLONS AND A NEW 12–INCH TO 10–INCH WATER MAIN FOR FUTURE CONNECTION NEAR CASA DE FRUTA RESTAURANT.

PROJECT SURVEY INFORMATION:

BASIS OF BEARINGS

BEARINGS ARE RELATIVE TO THOSE SHOWN UPON THE MAP ENTITLED, "PARCEL MAP BEING A PORTION OF RANCHO AUSAYMUS Y SAN FILIPE, SANTA CLARA COUNTY, CALIFORNIA", WHICH MAP WAS FILED FOR RECORD IN THE OFFICE OF THE RECORDER OF THE COUNTY OF SANTA CLARA, STATE OF CALIFORNIA, ON JUNE 20, 1972 IN BOOK 302 OF MAPS, AT PAGE 38, IF ROTATED 0°44'29" COUNTER–CLOCKWISE.

BENCHMARK

PK NAIL IN ASPHALT, AS SHOWN. ELEVATION: 271.51' (NAVD 88).

CONTACT INFORMATION:

OWNER:
CASA DE FRUTA PARKWAY LLC
JOE C. ZANGER, PARTNER
GENE H. ZANGER, PARTNER
10021 PACHECO PASS HWY
HOLLISTER, CA 95023

DESIGN ENGINEER:
NV5, INC.
VICTOR ALANIZ
2525 NATOMAS PARK DRIVE, #300
SACRAMENTO CA, 95833
(916) 641–9173

90% SUBMITTAL

DATE: 8/23/18	TIME: 5:11:07 PM		
SERVER: SA–FILE	LAYOUT: G1.0		
XREFS: TB–22X34I			
DRAWING NAME: G1.0–TITLE.DWG			
PAGE SETUP: 11x17 _PDF			
DESIGNER: VMA	PROJ. MGR: VMA		

NO.	BY	DATE	REVISIONS:

CAUTION: The engineer preparing these plans will not be responsible for, or liable for, unauthorized changes to or uses of these plans. All changes to the plans must be in writing and must be approved by the preparer of these plans.

REGISTERED PROFESSIONAL ENGINEER Victor M. Alaniz No. C57825 EXP. 6/30/20 CIVIL STATE OF CALIFORNIA

NV5
2525 NATOMAS PARK DR. STE. 300 SACRAMENTO, CA 95833
916.641.9100 TEL 916.641.9222 FAX WWW.NV5.COM

CASA de FRUTA Celebrating Over 100 Years

CASA DE FRUTA
WATER SYSTEM IMPROVEMENTS
GENERAL
TITLE SHEET

PREPARED FOR: CASA DE FRUTA DATE SUBMITTED: 8/23/2018

SHEET NUMBER G1.0
1 OF 16 SHEETS
SCALE VERTICAL: N/A HORIZONTAL: N/A
JOB NUMBER MTB022100

MICAELA.ROBERTSON
P:\2262\226218–XXXXXX–XX CASA DE FRUTA\CADD\P\GENERAL

LEGEND

EXISTING	PROPOSED	
WL		WATER MAIN
SS		SANITARY SEWER MAIN
UE	UE	UNDERGROUND ELECTRICAL LINE
UG		GAS LINE
UP		FUEL LINE
ST		STORM DRAIN LINE
OE		OVERHEAD ELECTRICAL LINE
	D	DRAIN LINE
		FENCE
	JT	JOINT TRENCH
		PARCEL LINE
		FINAL EASEMENT UNDER PREPARATION
		UNKNOWN UNDERGROUND UTILITY
		RAILROAD TRACKS
		EXISTING BUILDING OUTLINE
12" W	12" W	PIPE SIZE (IF KNOWN)
		GATE VALVE
		BUTTERFLY VALVE
		CHECK VALVE
		PIPE LINE CAP
		GUY WIRE
		UTILITY POLE
		STREET LIGHT
TEL		TELEPHONE POLE
		DRAIN INLET
		SIGN
		FIRE HYDRANT
ICV		IRRIGATION CONTROL VALVE
		RAILROAD CROSSING ARM
		AIR RELEASE VALVE
		SEPTIC TANK

PIPING SYMBOLS

	FLANGE JOINT
	BELL & SPIGOT JOINT
	FLEXIBLE COUPLING
	FLEXIBLE COUPLING W/ THRUST TIES
	FLANGED COUPLING ADAPTER (FCA)
	MECHANICAL COUPLING
	EXPANSION JOINT
	RESTRAINED EXPANSION JOINT
	REDUCER
	UNION
	BLIND FLANGE
	END CAP (SCREWED/WELDED)
	FLEXIBLE METAL HOSE
	FLEXIBLE BRAIDED RUBBER HOSE
	PIPE ANCHOR

ABBREVIATIONS

AC	ASPHALT CEMENT
BFP	BACK FLOW PREVENTER
BFV	BUTTERFLY VALVE
CLR	CLEARANCE
CONC.	CONCRETE
D	DRAIN
DIP	DUCTILE IRON PIPE
EP	EDGE OF PAVEMENT
ELEC	ELECTRICAL
ELEV	ELEVATION
EOG	EDGE OF GUTTER
(E), EX	EXISTING
GV	GATE VALVE
ELL	ELBOW
FCA	FLANGED COUPLING ADAPTER
FH	FIRE HYDRANT
FL	FLOW LINE
FW	FIRE WATER
HDPE	HIGH-DENSITY POLYETHYLENE
HDG	HOT DIP GALVANIZED
LF	LINEAR FEET
MAX	MAXIMUM
MIN	MINIMUM
MJ	MECHANICAL JOINT
(N)	NEW
O.C.	ON CENTER
O.D.	OUTER DIAMETER
OE	OVERHEAD ELECTRICAL
PIV	POST INDICATOR VALVE
(P), PR	PROPOSED
SS	SANITARY SEWER
SSCO	SANITARY SEWER CLEAN OUT
SSMH	SANITARY SEWER MANHOLE
ST	STORM DRAIN
STA	STATION
STD	STANDARD
SW	SIDEWALK
TEMP	TEMPORARY
TYP	TYPICAL
UE	UNDERGROUND ELECTRICAL
UG	GAS
UNK	UNKNOWN
UP	FUEL
W, WL	WATER
W/	WITH
WM	WATER METER
WV	WATER VALVE

GENERAL NOTES:

1. ALL NEW WATER MAINS, INCLUDING HYDRANT RUNS AND TIE-INS SHALL BE CONSTRUCTED ENTIRELY OF AWWA C900 PVC OR DUCTILE IRON FITTINGS (FITTINGS WRAPPED IN AN 8-MIL LINEAR LOW DENSITY POLYETHYLENE FILM), IN ACCORDANCE WITH THE TECHNICAL SPECIFICATIONS. THRUST BLOCKS SHALL BE PROVIDED AT ALL BENDS, BEHIND TEES, FIRE HYDRANTS, CROSSES, AND VALVES, IN ACCORDANCE WITH THESE PLANS.
2. TIE-INS ARE DIAGRAMATIC. THE CONTRACTOR SHALL NOT BE ENTITLED TO EXTRA PAYMENT IF ADDITIONAL PIPE, COUPLINGS, OR OTHER APPURTENANCES ARE REQUIRED TO COMPLETE A TIE-IN.
3. UTILITY LOCATIONS AND CLEARANCES ARE APPROXIMATE. CONTACT U.S.A. 48 HOURS BEFORE EXCAVATING TO HAVE EXISTING UTILITIES MARKED. THE CONTRACTOR SHALL POTHOLE FOR UTILITIES AS IDENTIFIED ON THE PLANS SUFFICIENTLY IN ADVANCE OF CONSTRUCTION TO ADJUST THE GRADE OF THE WATER MAIN TO MAINTAIN DESIRED CLEARANCES PER THESE PLANS. NO ADDITIONAL PAYMENT WILL BE MADE FOR GRADE ADJUSTMENTS OF LESS THAN 24" UNLESS EXTRA MATERIALS ARE REQUIRED, SUCH AS FITTINGS OR CONCRETE ENCASEMENT.
4. PIPE BEDDING AND TRENCH BACKFILL SHALL BE IN ACCORDANCE WITH CONSTRUCTION DETAILS 1-3 ON SHEET CD1.0 AND GEOTECHNICAL REPORT TITLED "CASA DE FRUTA WATER STORAGE TANK – GEOTECHNICAL ENGINEERING AND LIMITED GEOLOGIC REVIEW" DATED MARCH 3, 2017, PREPARED BY EARTH SYSTEMS PACIFIC.
5. THE ALLOWABLE LENGTH OF OPEN TRENCH SHALL NOT EXCEED 200 FEET. NO TRENCH SHALL BE ALLOWED TO REMAIN OPEN OVER NIGHT, UNLESS PLATED PER CALTRANS STANDARDS.
6. CONTRACTOR SHALL COORDINATE INTERRUPTIONS TO SERVICE WITH THE OWNER AND ENGINEER. SHUTDOWNS TO PROVIDE CONNECTIONS SHALL BE COMPLETED DURING NORMAL WORKING HOURS AND LIMITED TO A MAXIMUM OF 4 HOURS. THE CONTRACTOR SHALL NOT OPERATE ANY VALVES UNLESS AUTHORIZED BY THE OWNER. THE CONTRACTOR MAY OPERATE AND USE HYDRANTS WITH THE PROPER HYDRANT METER/BACKFLOW DEVICE AS PERMITTED BY THE OWNER.
7. THE CONTRACTOR SHALL DESIGNATE A PERSON TO CONTACT SHOULD TRENCH MAINTENANCE OR OTHER PROBLEMS ARISE DURING NON-WORKING HOURS OR DAYS. THIS PERSON SHOULD BE AVAILABLE 24 HOURS A DAY, 7 DAYS A WEEK. THE OWNER AND ENGINEER SHALL BE GIVEN THAT PERSON'S CONTACT INFORMATION.
8. ALL EXISTING UTILITIES AND PRIVATE IMPROVEMENTS THAT BECOME DAMAGED DURING CONSTRUCTION SHALL BE COMPLETELY RESTORED TO THE SATISFACTION OF THE ENGINEER, AT THE CONTRACTOR'S SOLE EXPENSE.
9. THE CONTRACTOR AGREES THAT, IN ACCORDANCE WITH GENERALLY ACCEPTED CONSTRUCTION PRACTICES, THE CONTRACTOR WILL BE REQUIRED TO ASSUME SOLE AND COMPLETE RESPONSIBILITY FOR JOB SITE CONDITIONS DURING THE COURSE OF CONSTRUCTION, INCLUDING SAFETY OF ALL PERSONS AND THAT THIS REQUIREMENT SHALL BE MADE TO APPLY CONTINUOUSLY AND NOT JUST DURING NORMAL WORKING HOURS.
10. EXCAVATIONS SHALL BE ADEQUATELY SHORED, BRACED AND SHEETED SO THAT THE EARTH WILL NOT SLIDE OR SETTLE AND SO THAT ALL EXISTING IMPROVEMENTS OF ANY KIND WILL BE FULLY PROTECTED FROM DAMAGE. ANY DAMAGE RESULTING FROM A LACK OF ADEQUATE SHORING, BRACING OR SHEETING, SHALL BE THE RESPONSIBILITY OF THE CONTRACTOR AND SHALL MAKE NECESSARY REPAIRS OR RECONSTRUCTION AT THE CONTRACTOR'S OWN EXPENSE. WHERE EXCAVATIONS FOR A UTILITY TRENCH, AND/OR STRUCTURE IS FIVE (5) FEET OR MORE IN DEPTH, THE CONTRACTOR SHALL PROVIDE ADEQUATE SHORING, BRACING AND SHEETING OR AN EQUIVALENT METHOD, FOR THE PROTECTION OF LIFE, OR LIMB, WHICH SHALL CONFORM TO THE APPLICABLE CONSTRUCTION SAFETY ORDERS OF THE DIVISION OF INDUSTRIAL SAFETY OF THE STATE OF CALIFORNIA. THE CONTRACTOR SHALL ALWAYS COMPLY WITH OSHA REQUIREMENTS.
11. SHOULD IT APPEAR THAT THE WORK TO BE DONE, OR ANY MATTER RELATIVE THERETO, IS NOT SUFFICIENTLY DETAILED OR EXPLAINED ON THESE PLANS, THE CONTRACTOR SHALL CONTACT THE OWNER FOR SUCH FURTHER EXPLANATIONS AS MAY BE NECESSARY.
12. EXISTING UTILITIES SHALL BE MAINTAINED IN SERVICE AND IN PLACE BY THE CONTRACTOR DURING CONSTRUCTION UNLESS OTHERWISE SHOWN.
13. CONTRACTOR SHALL EXERCISE CAUTION WHEN WORKING NEAR OVERHEAD ELECTRICAL UTILITY LINES.
14. CONTRACTOR SHALL KEEP DETAILED RECORDS AND AS-BUILTS SHOWING ALL MODIFICATIONS MADE TO THESE PLANS. THESE RECORDS AND AS-BUILTS SHALL BE PROVIDED TO THE OWNER OR ENGINEER UPON PROJECT COMPLETION FOR USE IN PREPARING RECORD DRAWINGS.

SECTION/DETAIL SYMBOLS

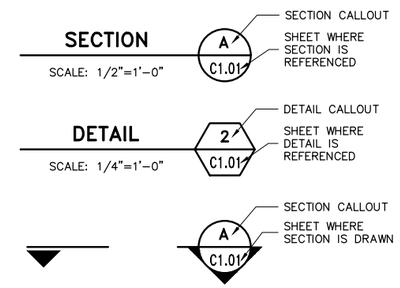

1-800-227-2600 CALL BEFORE YOU DIG USA UNDERGROUND SERVICE ALERT

90% SUBMITTAL

DATE: 8/23/18 TIME: 5:11:15 PM
SERVER: SA-FILE LAYOUT: G1.1
XREFS: TB-22X34I
DRAWING NAME: G1.1-NOTES.DWG
PAGE SETUP: 11x17 _PDF
DESIGNER: VMA PROJ. MGR: VMA

NO.	BY	DATE	REVISIONS:

CAUTION: *The engineer preparing these plans will not be responsible for, or liable for, unauthorized changes to or uses of these plans. All changes to the plans must be in writing and must be approved by the preparer of these plans.*

REGISTERED PROFESSIONAL ENGINEER Victor M. Alantz No. C57825 EXP. 6/30/20 CIVIL STATE OF CALIFORNIA

NV5
2525 NATOMAS PARK DR. STE. 300 SACRAMENTO, CA 95833
916.641.9100 TEL 916.641.9222 FAX WWW.NV5.COM

CASA de FRUTA Celebrating Over 100 Years

CASA DE FRUTA
WATER SYSTEM IMPROVEMENTS
GENERAL
GENERAL NOTES, LEGEND, AND ABBREVIATIONS

PREPARED FOR: CASA DE FRUTA DATE SUBMITTED: 8/23/2018

SHEET NUMBER G1.1
2 OF 16 SHEETS
SCALE
VERTICAL: N/A
HORIZONTAL: N/A
JOB NUMBER MTB022100

MICAELA.ROBERTSON
P:\2262\226218-XXXXXX-XX CASA DE FRUTA\CADD\P\GENERAL

N
0 240 480
1"=240'

90% SUBMITTAL

DATE: 8/23/18	TIME: 5:13:56 PM
SERVER: SA-FILE	LAYOUT: G1.2
XREFS: TB-22X34I	
DRAWING NAME: G1.2-INDEX.DWG	
PAGE SETUP: 11x17 _PDF	
DESIGNER: VMA	PROJ. MGR: VMA

NO.	BY	DATE	REVISIONS:

CAUTION: The engineer preparing these plans will not be responsible for, or liable for, unauthorized changes to or uses of these plans. All changes to the plans must be in writing and must be approved by the preparer of these plans.

REGISTERED PROFESSIONAL ENGINEER
Victor M. Algviz
No. C57825
EXP. 6/30/20
CIVIL
STATE OF CALIFORNIA

NV5
2525 NATOMAS PARK DR. STE. 300 SACRAMENTO, CA 95833
916.641.9100 TEL 916.641.9222 FAX WWW.NV5.COM

CASA de FRUTA
Celebrating Over 100 Years

CASA DE FRUTA
WATER SYSTEM IMPROVEMENTS
GENERAL
SHEET INDEX MAP

PREPARED FOR: CASA DE FRUTA DATE SUBMITTED: 8/23/2018

SHEET NUMBER
G1.2
3 OF 16 SHEETS

SCALE
VERTICAL: N/A
HORIZONTAL: N/A

JOB NUMBER
MTB022100

MICAELA.ROBERTSON
P:\2262\226218-XXXXXX-XX CASA DE FRUTA\CADD\IP\GENERAL

NOTES:

1. CASA DE FRUTA, PER GRANT DEED RECORDED ON APRIL 19, 1982 HAS AN EXCLUSIVE EASEMENT TO CONSTRUCT, MAINTAIN, AND USE A 100 FOOT TANK SITE AS SHOWN ON PARCEL 2 OF PARCEL MAP RECORDED IN BOOK 477 OF MAPS, PAGE 31, SANTA CLARA COUNTY RECORDS.
2. CASA DE FRUTA, PER GRANT DEED RECORDED ON APRIL 19, 1982, HAS AN EXCLUSIVE RIGHT TO CONSTRUCT, MAINTAIN, AND USE AN EASEMENT FOR WATERLINE 15 FEET IN WIDTH OVER THE SHORTEST PRACTICAL ROUTE FROM PARCEL 1 ACROSS PARCEL 2 OF PARCEL MAP RECORDED IN BOOK 477 OF MAPS, PAGE 31, SANTA CLARA COUNTY RECORDS.
3. CASA DE FRUTA, PER GRANT DEED RECORDED ON APRIL 19, 1982, HAS AN EXCLUSIVE RIGHT TO CONSTRUCT, MAINTAIN, AND USE AN EASEMENT FOR INGRESS AND EGRESS, 20 FEET IN WIDTH OVER THE SHORTEST PRACTICAL ROUTE FROM PARCEL 1 ACROSS PARCEL 2 OF PARCEL MAP RECORDED IN BOOK 477 OF MAPS, PAGE 31, SANTA CLARA COUNTY RECORDS TO THE TANK.

N

0 240 480
1"=240'

90% SUBMITTAL

DATE: 8/23/18 TIME: 5:16:31 PM
SERVER: SA-FILE LAYOUT: Overall Site Map
XREFS: TB-22X34I
DRAWING NAME: G1.3-SITE PLAN.DWG
PAGE SETUP: 11x17 _PDF
DESIGNER: VMA PROJ. MGR: VMA

NO.	BY	DATE	REVISIONS:

CAUTION: The engineer preparing these plans will not be responsible for, or liable for, unauthorized changes to or uses of these plans. All changes to the plans must be in writing and must be approved by the preparer of these plans.

REGISTERED PROFESSIONAL ENGINEER
Victor M. Alaniz
No. C57825
EXP. 6/30/20
CIVIL
STATE OF CALIFORNIA

NV5
2525 NATOMAS PARK DR. STE. 300 SACRAMENTO, CA 95833
916.641.9100 TEL 916.641.9222 FAX WWW.NV5.COM

CASA de FRUTA
Celebrating Over 100 Years

CASA DE FRUTA
WATER SYSTEM IMPROVEMENTS
GENERAL
OVERALL SITE MAP

PREPARED FOR: CASA DE FRUTA DATE SUBMITTED: 8/23/2018

SHEET NUMBER
G1.3
4 OF 16 SHEETS

SCALE
VERTICAL: N/A
HORIZONTAL: 1" = 240"

JOB NUMBER
MTB022100

MICAELA.ROBERTSON
P:\2262\226218-XXXXXX-XX CASA DE FRUTA\CADD\P\GENERAL

TANK EASEMENT
SEE SHEET G1.3, NOTE 1

(P) TANK
SEE SHEET M1.0

JOINT TRENCH
SEE DETAIL 3/CD1.0
12" WATER
2" FILL WATER
2" CONDUIT (SIGNAL)
2" CONDUIT (POWER)

12" TANK OVERFLOW AND
DRAIN LINE
SEE SHEET M1.0 AND C1.6

(N) 2" CONDUIT (POWER)

DAYLIGHT 12" D
TO EXISTING TRENCH
SEE DETAIL 4/CD1.0

(E)
CONNECT (N) POWER LINE
FOR TANK MIXER
SEE DETAIL X/XX

MISC STORAGE

12"W

6"SS

Z

0 50 100
1" = 50'

1-800-227-2600
CALL BEFORE YOU DIG
UNDERGROUND SERVICE ALERT

90% SUBMITTAL

DATE: 8/23/18	TIME: 5:17:07 PM
SERVER: SA-FILE	LAYOUT: C1.0
XREFS: TB-22X34L	
DRAWING NAME: C1.0.DWG	
PAGE SETUP: 11x17 _PDF	
DESIGNER: VMA	PROJ. MGR: VMA

NO.	BY	DATE	REVISIONS:

CAUTION: *The engineer preparing these plans will not be responsible for, or liable for, unauthorized changes to or uses of these plans. All changes to the plans must be in writing and must be approved by the preparer of these plans.*

REGISTERED PROFESSIONAL ENGINEER
Victor M. Alpriz
No. C57825
EXP. 6/30/20
CIVIL
STATE OF CALIFORNIA

N|V|5
2525 NATOMAS PARK DR. STE. 300 SACRAMENTO, CA 95833
916.641.9100 TEL 916.641.9222 FAX WWW.NV5.COM

CASA de FRUTA®
Celebrating Over 100 Years

CASA DE FRUTA
WATER SYSTEM IMPROVEMENTS
CIVIL
PROPOSED PARTIAL SITE PLAN

PREPARED FOR: CASA DE FRUTA **DATE SUBMITTED: 8/23/2018**

SHEET NUMBER
C1.0
5 OF 16 SHEETS

SCALE
VERTICAL:
HORIZONTAL: 1"=5'

JOB NUMBER
MTB022100

MICAELA.ROBERTSON
P:\2262\226218-XXXXXX-XX CASA DE FRUTA\CADD\IP\CIVIL

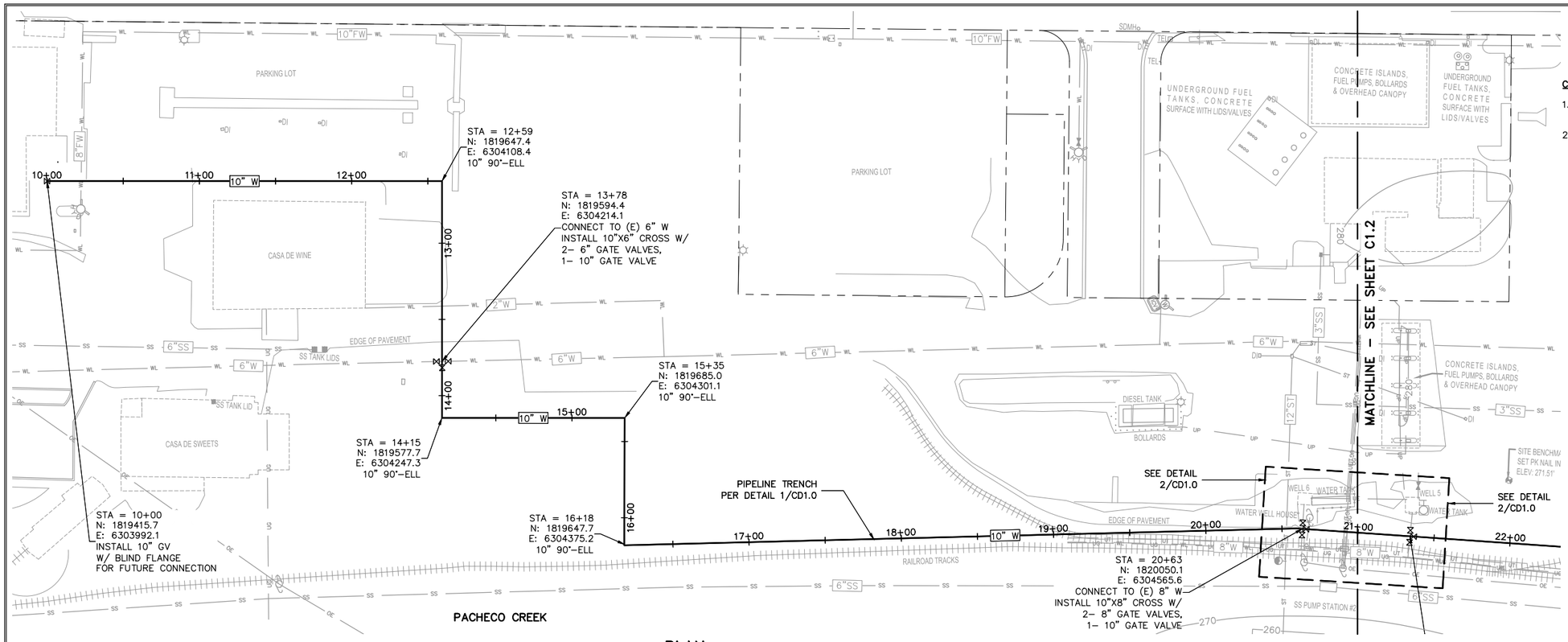

CONSTRUCTION NOTES:

1. PROVIDE THRUST BLOCKS AT ALL BENDS, BEHIND TEES, FIRE HYDRANTS, CROSSES, AND VALVES.
2. CONTRACTOR TO REPLACE ALL CURB, GUTTER, AND SIDEWALK IN KIND.

PLAN

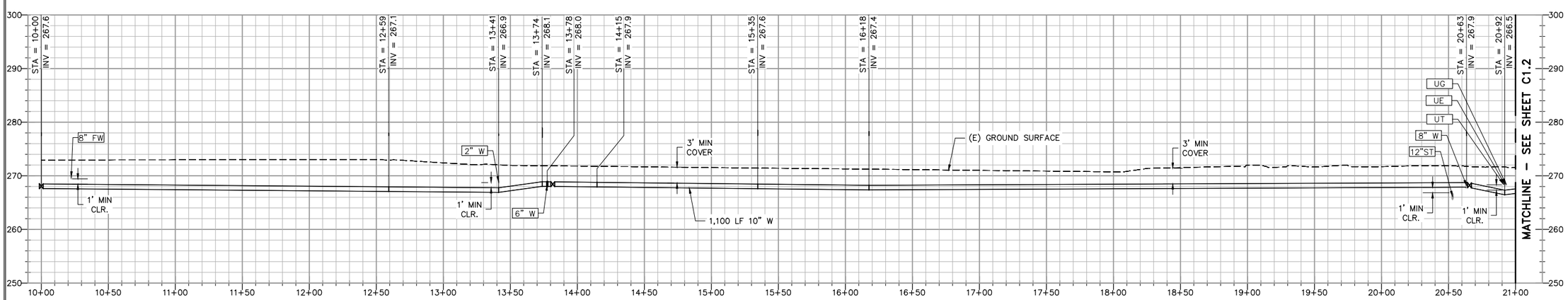

PROFILE – STA 10+00 TO 21+00

HORIZONTAL: 1" = 40'
VERTICAL: 1" = 10'

1-800-227-2600 CALL BEFORE YOU DIG UNDERGROUND SERVICE ALERT

90% SUBMITTAL

DATE: 8/23/18	TIME: 5:17:51 PM	NO.	BY	DATE	REVISIONS:
SERVER: SA-FILE	LAYOUT: C1.1				
XREFS: TB-22X34L					
DRAWING NAME: C1.1.DWG					
PAGE SETUP: 11x17 _PDF					
DESIGNER: VMA	PROJ. MGR: VMA				

CAUTION: The engineer preparing these plans will not be responsible for, or liable for, unauthorized changes to or uses of these plans. All changes to the plans must be in writing and must be approved by the preparer of these plans.

REGISTERED PROFESSIONAL ENGINEER Victor M. Alonzo No. C57825 EXP. 6/30/20 CIVIL STATE OF CALIFORNIA

NV5
2525 NATOMAS PARK DR. STE. 300 SACRAMENTO, CA 95833
916.641.9100 TEL 916.641.9222 FAX WWW.NV5.COM

CASA de FRUTA Celebrating Over 100 Years

CASA DE FRUTA
WATER SYSTEM IMPROVEMENTS
CIVIL
PLAN AND PROFILE STA 10+00 TO 21+00

PREPARED FOR: CASA DE FRUTA DATE SUBMITTED: 8/23/2018

SHEET NUMBER C1.1
6 OF 16 SHEETS
SCALE VERTICAL: 1"=10' HORIZONTAL: 1"=40'
JOB NUMBER MTB022100

MICAELA.ROBERTSON
P:\2262\226218-XXXXX-XX CASA DE FRUTA\CADD\IP\CIVIL

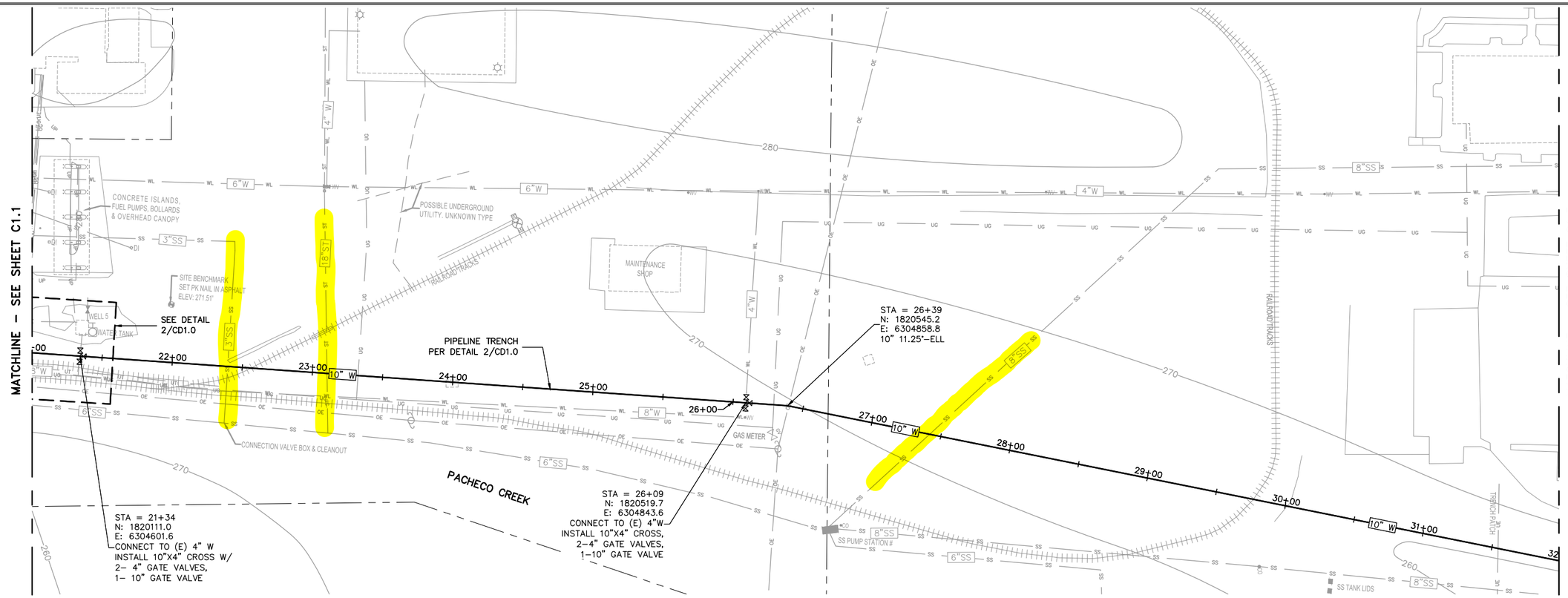

PLAN

CONSTRUCTION NOTES:

1. PROVIDE THRUST BLOCKS AT ALL BENDS, BEHIND TEES, FIRE HYDRANTS, CROSSES, AND VALVES.
2. CONTRACTOR TO REPLACE ALL CURB, GUTTER, AND SIDEWALK IN KIND.
3. WHERE (N) WATER MAIN CROSSES UNDER STORM DRAIN OR SEWER MAIN, CONTRACTOR TO ENSURE THERE ARE NO JOINTS ON THE WATER LINE WITHIN 10 FEET FROM THE CENTERLINE OF THE STORM DRAIN OR SEWER MAIN.

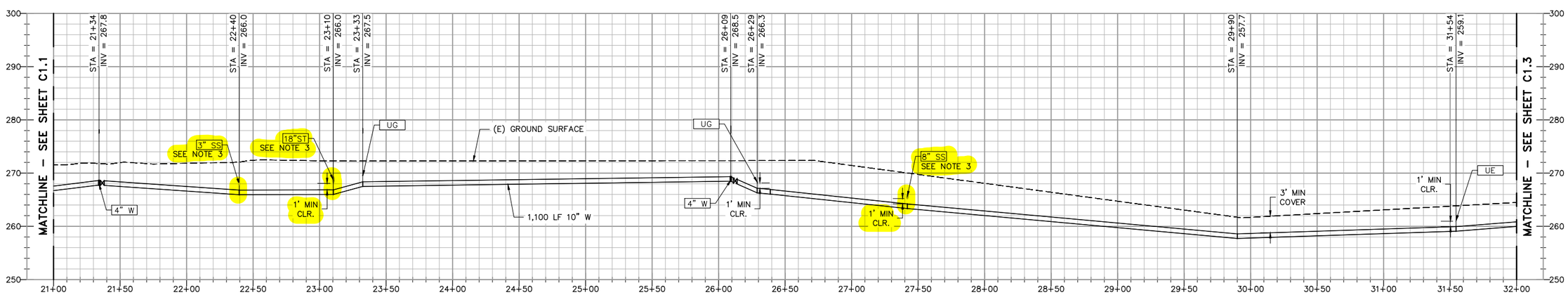

PROFILE – STA 21+00 TO 32+00

HORIZONTAL: 1" = 40'
VERTICAL: 1" = 10'

90% SUBMITTAL

DATE: 8/23/18	TIME: 5:18:17 PM		
SERVER: SA-FILE	LAYOUT: C1.2		
XREFS: TB-22X34L			
DRAWING NAME: C1.2.DWG			
PAGE SETUP: 11x17 _PDF			
DESIGNER: VMA	PROJ. MGR: VMA		

NO.	BY	DATE	REVISIONS:

CAUTION: The engineer preparing these plans will not be responsible for, or liable for, unauthorized changes to or uses of these plans. All changes to the plans must be in writing and must be approved by the preparer of these plans.

REGISTERED PROFESSIONAL ENGINEER Victor M. Alpriz No. C57825 EXP. 6/30/20 CIVIL STATE OF CALIFORNIA

NV5
2525 NATOMAS PARK DR. STE. 300 SACRAMENTO, CA 95833
916.641.9100 TEL 916.641.9222 FAX WWW.NV5.COM

CASA de FRUTA® Celebrating Over 100 Years

CASA DE FRUTA
WATER SYSTEM IMPROVEMENTS
CIVIL
PLAN AND PROFILE STA 21+00 TO 32+00

PREPARED FOR: CASA DE FRUTA DATE SUBMITTED: 8/23/2018

SHEET NUMBER C1.2
7 OF 16 SHEETS
SCALE VERTICAL: 1"=10' HORIZONTAL: 1"=40'
JOB NUMBER MTB022100

MICAELA.ROBERTSON
P:\2621\22621B-XXXXXX-XX CASA DE FRUTA\CADD\IP\CIVIL

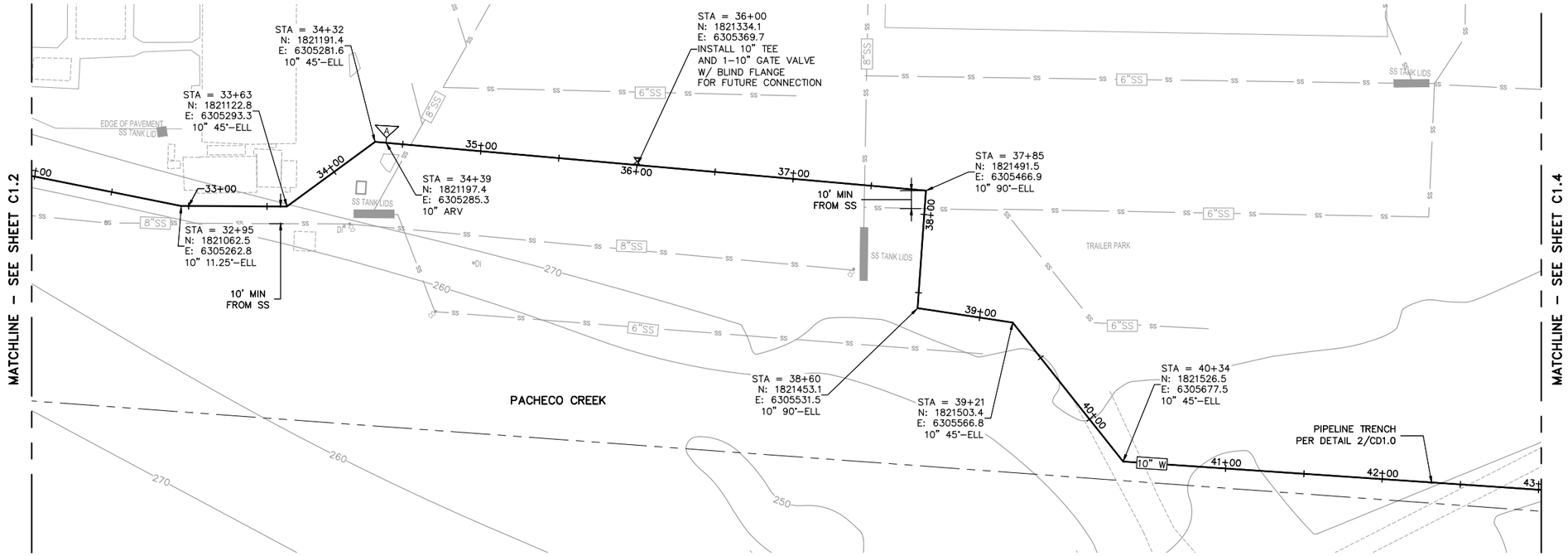

PLAN

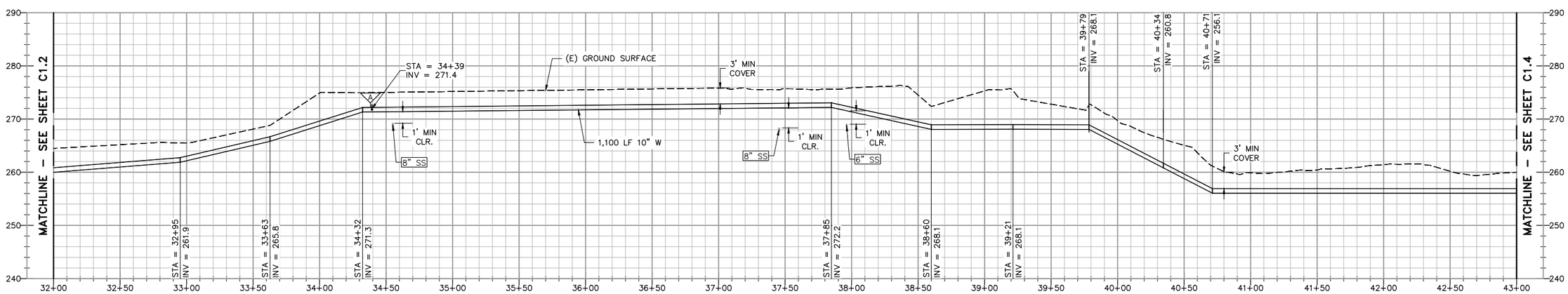

PROFILE – STA 32+00 TO 43+00

HORIZONTAL: 1" = 40'
VERTICAL: 1" = 10'

CONSTRUCTION NOTES:

1. PROVIDE THRUST BLOCKS AT ALL BENDS, BEHIND TEES, FIRE HYDRANTS, CROSSES, AND VALVES.
2. CONTRACTOR TO REPLACE ALL CURB, GUTTER, AND SIDEWALK IN KIND.

N

0 40 80
1" = 40'

CALL BEFORE YOU DIG 1-800-227-2600 USA UNDERGROUND SERVICE ALERT

90% SUBMITTAL

DATE: 8/23/18	TIME: 5:18:41 PM		
SERVER: SA-FILE	LAYOUT: C1.1		
XREFS: TB-22X34L			
DRAWING NAME: C1.3.DWG			
PAGE SETUP: 11x17 _PDF			
DESIGNER: VMA	PROJ. MGR: VMA		

NO.	BY	DATE	REVISIONS:

CAUTION: The engineer preparing these plans will not be responsible for, or liable for, unauthorized changes to or uses of these plans. All changes to the plans must be in writing and must be approved by the preparer of these plans.

REGISTERED PROFESSIONAL ENGINEER Victor M. Alonzo No. C57825 EXP. 6/30/20 CIVIL STATE OF CALIFORNIA

NV5
2525 NATOMAS PARK DR. STE. 300 SACRAMENTO, CA 95833
916.641.9100 TEL 916.641.9222 FAX WWW.NV5.COM

CASA de FRUTA Celebrating Over 100 Years

CASA DE FRUTA
WATER SYSTEM IMPROVEMENTS
CIVIL
PLAN AND PROFILE STA 32+00 TO 43+00

PREPARED FOR: CASA DE FRUTA DATE SUBMITTED: 8/23/2018

SHEET NUMBER C1.3
8 OF 16 SHEETS
SCALE VERTICAL: 1"=10' HORIZONTAL: 1"=40'
JOB NUMBER MTB022100

MICAELA.ROBERTSON
P:\2262\226218-XXXXX-XX CASA DE FRUTA\CADD\IP\CIVIL

CONSTRUCTION NOTES:

1. PROVIDE THRUST BLOCKS AT ALL BENDS, BEHIND TEES, FIRE HYDRANTS, CROSSES, AND VALVES.
2. CONTRACTOR TO REPLACE ALL CURB, GUTTER, AND SIDEWALK IN KIND.
3. WHERE (N) WATER MAIN CROSSES UNDER STORM DRAIN OR SEWER MAIN, CONTRACTOR TO ENSURE THERE ARE NO JOINTS ON THE WATER LINE WITHIN 10 FEET FROM THE CENTERLINE OF THE STORM DRAIN OR SEWER MAIN.

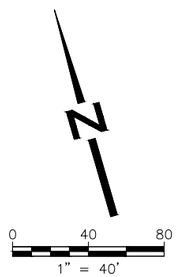

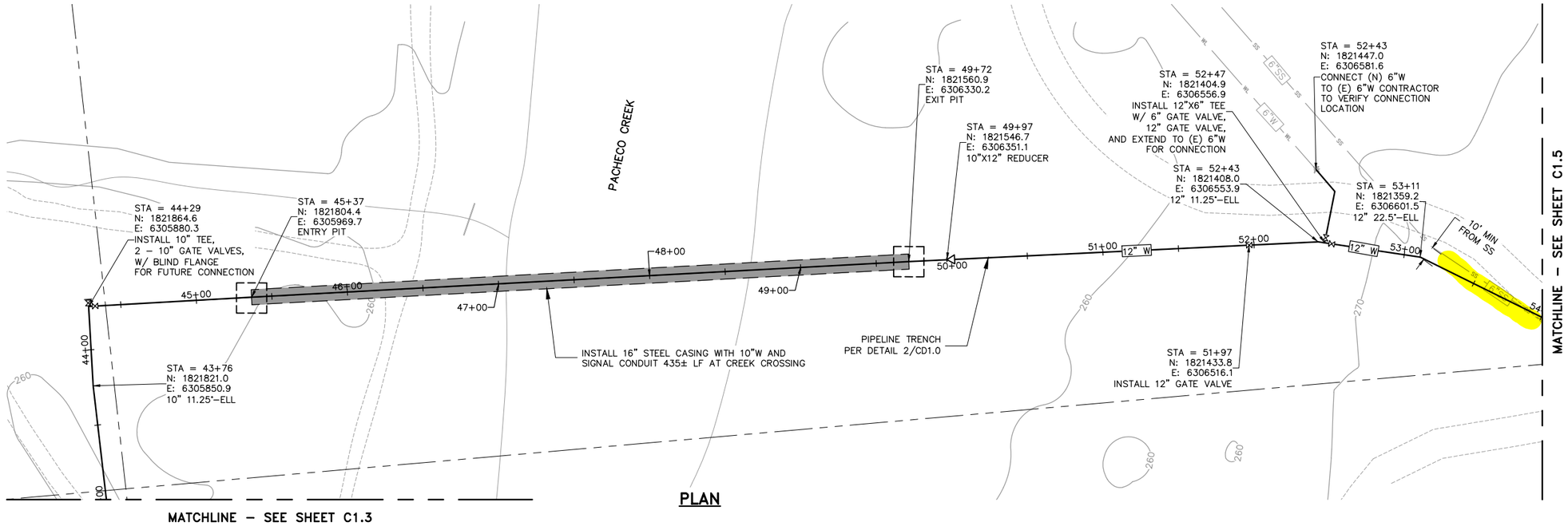

PLAN

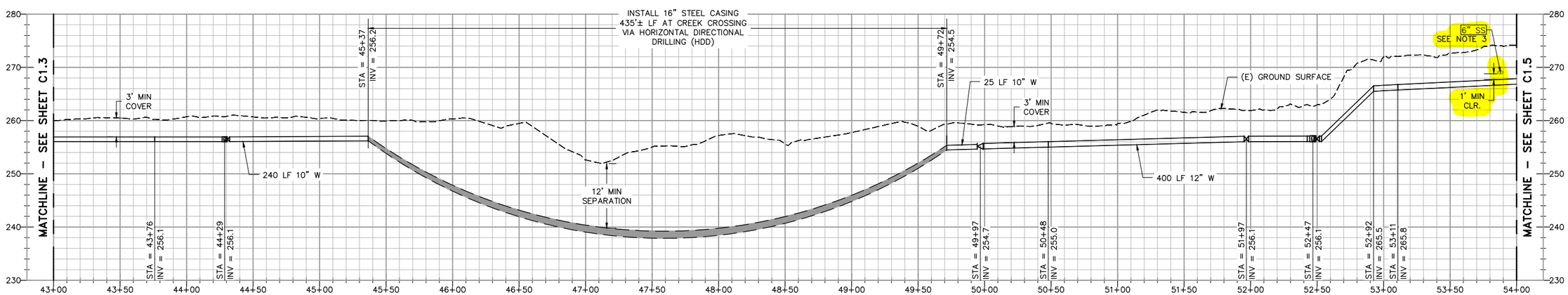

PROFILE – STA 43+00 TO 54+00

HORIZONTAL: 1" = 40'
VERTICAL: 1" = 10'

CALL BEFORE YOU DIG
1-800-227-2600
USA
UNDERGROUND SERVICE ALERT

90% SUBMITTAL

DATE: 9/13/18 TIME: 3:57:38 PM	NO.	BY	DATE	REVISIONS:
SERVER: SA-FILE LAYOUT: C1.4				
XREFS: TB-22X34L				
DRAWING NAME: C1.4.DWG				
PAGE SETUP: 11x17 _PDF				
DESIGNER: VMA PROJ. MGR: VMA				

CAUTION: The engineer preparing these plans will not be responsible for, or liable for, unauthorized changes to or uses of these plans. All changes to the plans must be in writing and must be approved by the preparer of these plans.

NV5
2525 NATOMAS PARK DR. STE. 300 SACRAMENTO, CA 95833
916.641.9100 TEL 916.641.9222 FAX WWW.NV5.COM

CASA de FRUTA
Celebrating Over 100 Years

CASA DE FRUTA
WATER SYSTEM IMPROVEMENTS
CIVIL
PLAN AND PROFILE STA 43+00 TO 54+00

PREPARED FOR: CASA DE FRUTA DATE SUBMITTED: 8/23/2018

SHEET NUMBER C1.4
9 OF 16 SHEETS
SCALE
VERTICAL: 1"=10'
HORIZONTAL: 1"=40'
JOB NUMBER MTB022100

NINOM
\\NV5.COM\PANZURA\INF\PROJECTS\2262\226218-XXXXXX-XX CASA DE FRUTA\CADD\IP\CIVIL

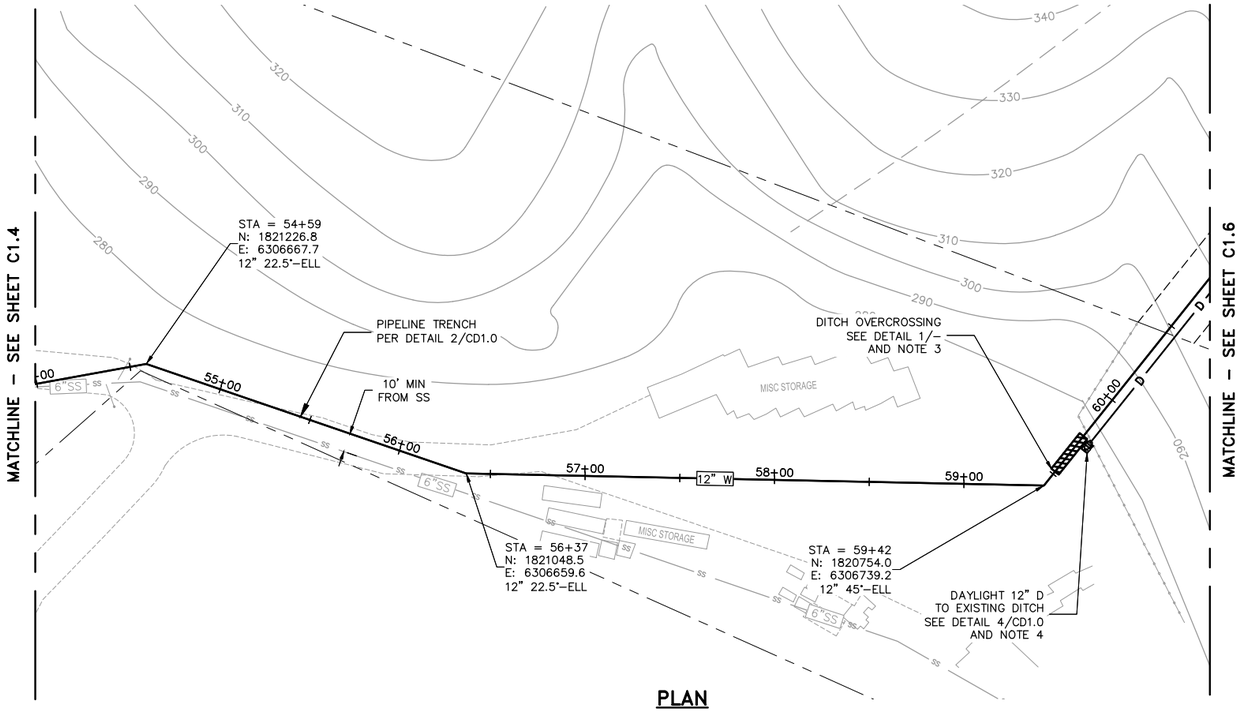

PLAN

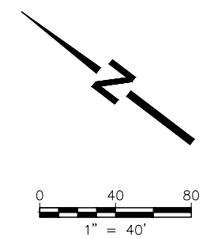

CONSTRUCTION NOTES:

1. PROVIDE THRUST BLOCKS AT ALL BENDS, BEHIND TEES, FIRE HYDRANTS, CROSSES, AND VALVES.
2. CONTRACTOR TO REPLACE ALL CURB, GUTTER, AND SIDEWALK IN KIND.
3. EXACT LIMITS OF DITCH OVERCROSSING WILL BE CONFIRMED DURING CONSTRUCTION.
4. CONTRACTOR TO COORDINATE EXACT LOCATION OF DRAIN OUTLET ROCK PROTECTION (SEE DETAIL 4/CD1.0) WITH OWNER PRIOR TO CONSTRUCTION.

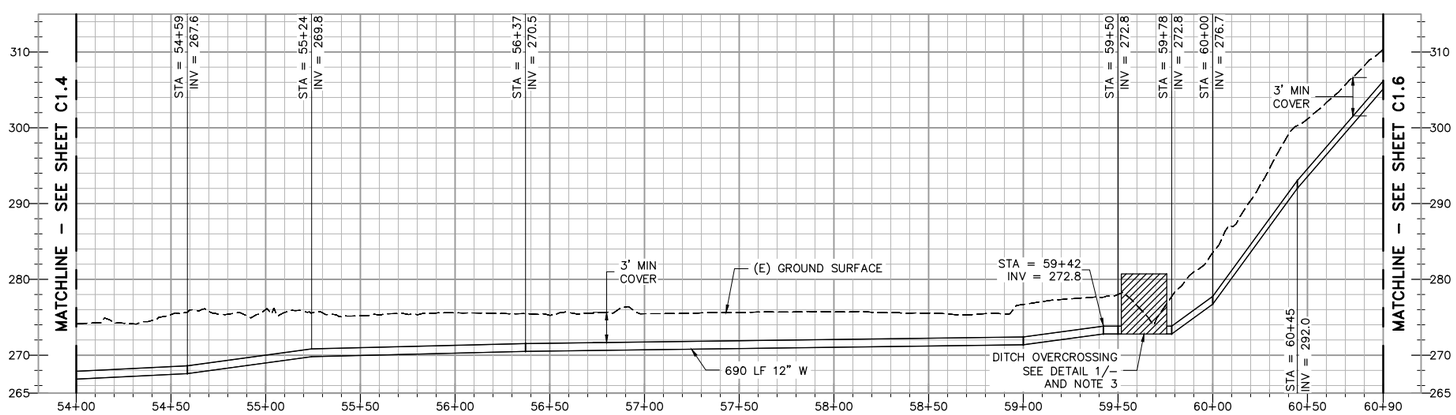

PROFILE – STA 54+00 TO 60+90

HORIZONTAL: 1" = 40'
VERTICAL: 1" = 10'

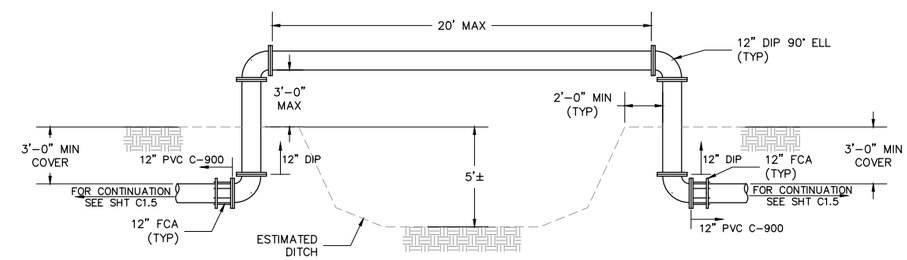

DITCH OVERCROSSING DETAIL 1/–

NOT TO SCALE

90% SUBMITTAL

DATE: 9/14/18	TIME: 8:49:02 AM		
SERVER: SA–FILE	LAYOUT: C1.5		
XREFS: TB–22X34L			
DRAWING NAME: C1.5.DWG			
PAGE SETUP: 11x17 _PDF			
DESIGNER: VMA	PROJ. MGR: VMA		

NO.	BY	DATE	REVISIONS:

CAUTION: *The engineer preparing these plans will not be responsible for, or liable for, unauthorized changes to or uses of these plans. All changes to the plans must be in writing and must be approved by the preparer of these plans.*

NV5
2525 NATOMAS PARK DR. STE. 300 SACRAMENTO, CA 95833
916.641.9100 TEL 916.641.9222 FAX WWW.NV5.COM

CASA de FRUTA
Celebrating Over 100 Years

CASA DE FRUTA
WATER SYSTEM IMPROVEMENTS
CIVIL
PLAN AND PROFILE STA 54+00 TO 60+90

PREPARED FOR: CASA DE FRUTA DATE SUBMITTED: 8/23/2018

SHEET NUMBER C1.5
10 OF 16 SHEETS
SCALE
VERTICAL: 1"=10'
HORIZONTAL: 1"=40'
JOB NUMBER MTB022100

NINOM
\\NV5.COM\PANZURA\INF\PROJECTS\2262\226218-XXXXX-XX CASA DE FRUTA\CADD\IP\CIVIL

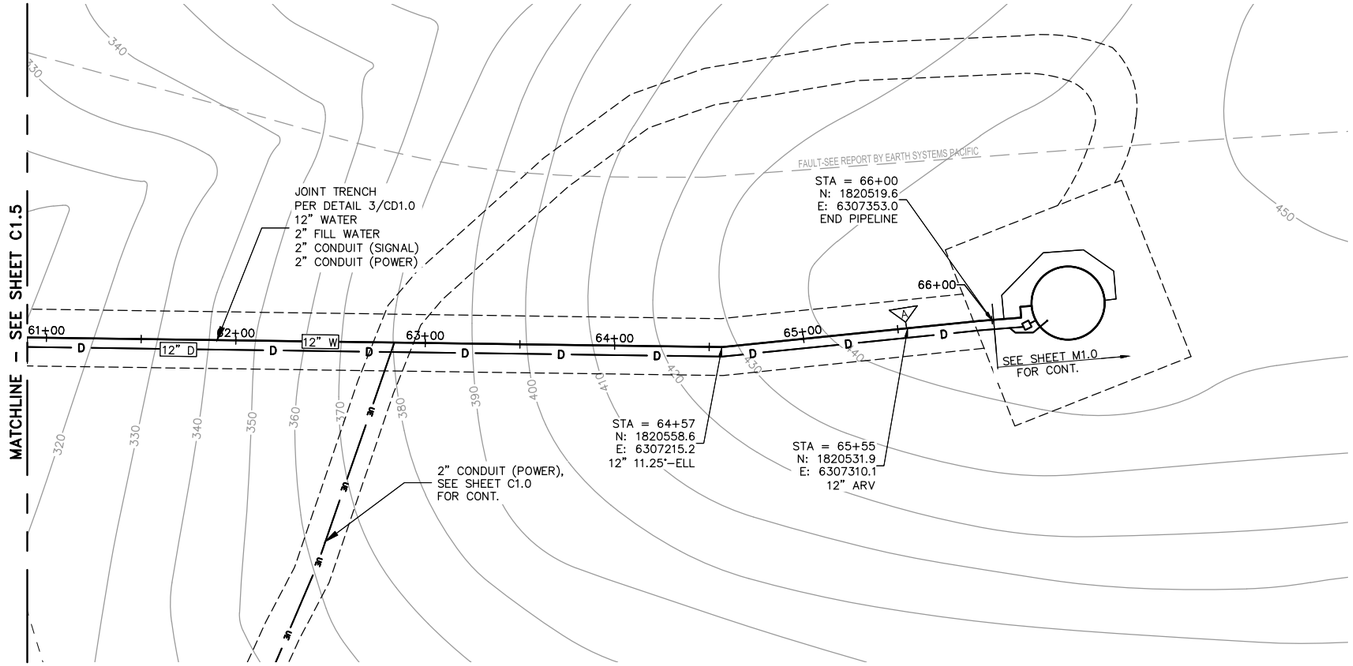

PLAN

CONSTRUCTION NOTES:

1. PROVIDE THRUST BLOCKS AT ALL BENDS, BEHIND TEES, FIRE HYDRANTS, CROSSES, AND VALVES.
2. CONTRACTOR TO REPLACE ALL CURB, GUTTER, AND SIDEWALK IN KIND.

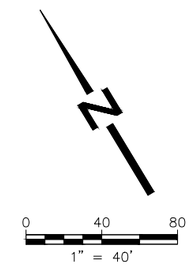

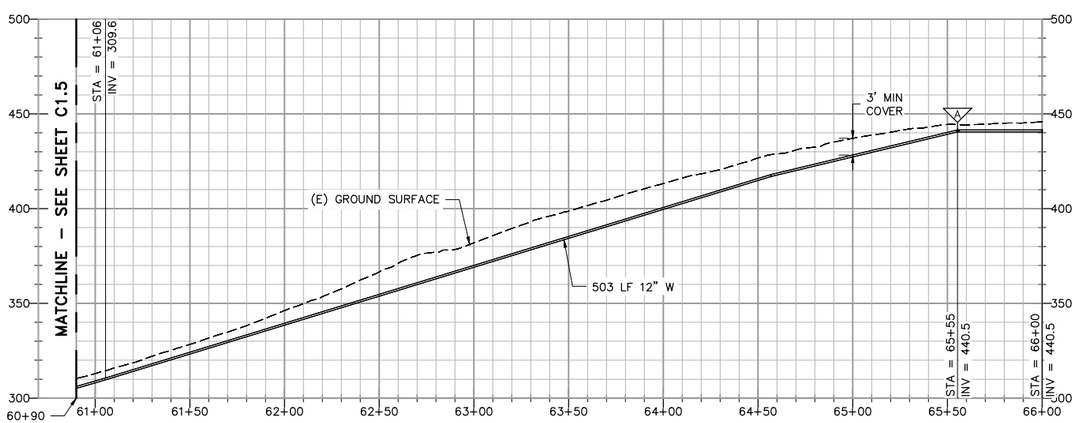

PROFILE – STA 60+90 TO 68+00

HORIZONTAL: 1" = 40'
VERTICAL: 1" = 40'

90% SUBMITTAL

DATE: 9/14/18 TIME: 8:47:58 AM	NO.	BY	DATE	REVISIONS:
SERVER: SA-FILE LAYOUT: C1.1				
XREFS: TB-22X34L				
DRAWING NAME: C1.6.DWG				
PAGE SETUP: 11x17 _PDF				
DESIGNER: VMA PROJ. MGR: VMA				

CAUTION: The engineer preparing these plans will not be responsible for, or liable for, unauthorized changes to or uses of these plans. All changes to the plans must be in writing and must be approved by the preparer of these plans.

NV5
2525 NATOMAS PARK DR. STE. 300 SACRAMENTO, CA 95833
916.641.9100 TEL 916.641.9222 FAX WWW.NV5.COM

CASA de FRUTA
Celebrating Over 100 Years

CASA DE FRUTA
WATER SYSTEM IMPROVEMENTS
CIVIL
PLAN AND PROFILE STA 60+90 TO 66+00

PREPARED FOR: CASA DE FRUTA DATE SUBMITTED: 8/23/2018

SHEET NUMBER C1.6
11 OF 16 SHEETS
SCALE
VERTICAL: 1"=10'
HORIZONTAL: 1"=40'
JOB NUMBER MTB022100

NINOM
\\NV5.COM\PANZURA\INF\PROJECTS\2262\226218-XXXXXX-XX CASA DE FRUTA\CADD\IP\CIVIL

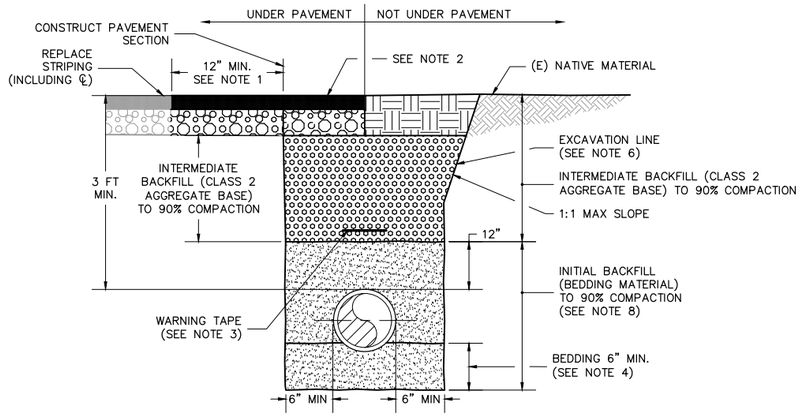

WATER PIPELINE TRENCH (1 / –)

NOT TO SCALE

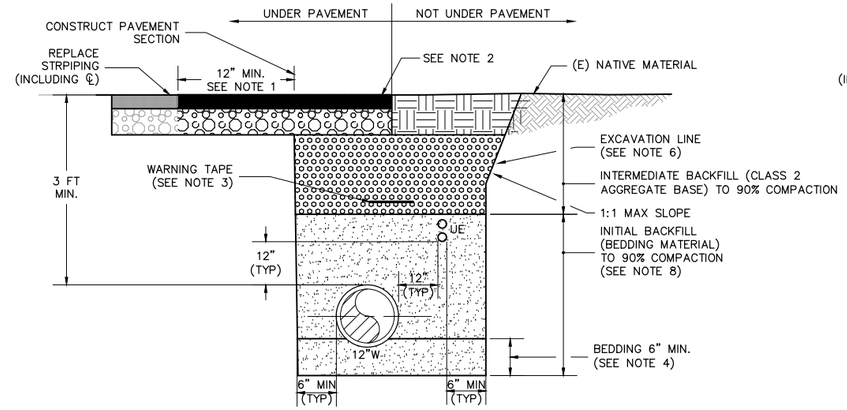

WATER PIPELINE & SIGNAL CONDUIT TRENCH (2 / –)

NOT TO SCALE

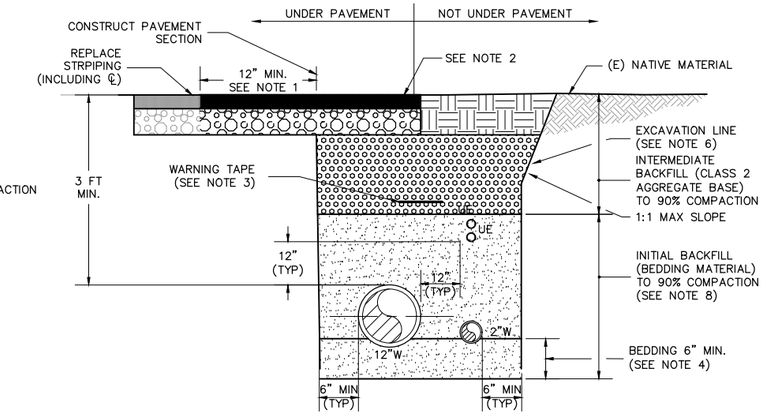

JOINT TRENCH (3 / –)

NOT TO SCALE

TRENCH EXCAVATION AND BACKFILL NOTES (FOR DETAILS 1–3):

1. EXISTING ASPHALT CONCRETE (AC) MUST BE SAWCUT. SPRAY JOINT WITH ASPHALT EMULSION SS–1.
2. IF DISTANCE BETWEEN EDGE OF TRENCH TO GUTTER LIP OR EDGE OF PAVEMENT IS 3' OR LESS, THEN REMOVE ALL A.C. UP TO GUTTER LIP OR E.P. AND REPAVE. PROVIDE REPLACEMENT AC PAVEMENT SECTION TO MATCH EXISTING PAVEMENT SECTION OR SIX–INCH PAVEMENT SECTION, WHICHEVER IS GREATER. REPLACEMENT PAVEMENT SHALL BE KEPT FLUSH WITH EXISTING PAVEMENT AT ALL TIMES.
3. SEE SPECIFICATIONS FOR BURIED WARNING TAPE.
4. AS REQUIRED BY CONSTRUCTION MANAGER, BOTTOM 6 INCHES OF BEDDING TO BE SUBSTITUTED WITH DRAIN ROCK. WHEN DIRECTED BY THE CONSTRUCTION MANAGER, PLACE DRAIN ROCK USING VIBRATORY MEANS TO ACHIEVE CONSOLIDATION AND A FIRM AND STABLE BASE. SURROUND DRAIN ROCK WITH NON–WOVEN FILTER FABRIC.
5. TEMPORARY CUTBACK SHALL BE PLACED IMMEDIATELY AFTER BACKFILL AND SHALL BE MAINTAINED BY THE CONTRACTOR UNTIL PERMANENT PAVING IS INSTALLED.
6. TRENCHES 5 FEET OR MORE IN DEPTH MUST BE GUARDED BY A SHORING SYSTEM, SLOPING THE GROUND OR OTHER EQUIVALENT MEANS. MAX. SLOPE: 1(H):1(V) SLOPE ONLY ALLOWED OUTSIDE PAVED AREA.
7. COMPACTION OF BEDDING AND BACKFILL SHALL BE BY MECHANICAL MEANS ONLY. PONDING AND JETTING ARE PROHIBITED.
8. NATIVE SOILS MAY NOT BE SUITABLE FOR BACKFILL. ENGINEERED FILL MATERIAL SHALL NOT CONTAIN ROCKS GREATER THAN 3 INCHES AND SHOULD BE NON–EXPANSIVE IN NATURE WITH A PLASTICITY INDEX LESS THAN 8 AND A LIQUID LIMIT LESS THAN 30. THE ORGANIC CONTENT OF ALL IMPORT FILLS SHOULD BE LESS THAN 3.5 PERCENT.

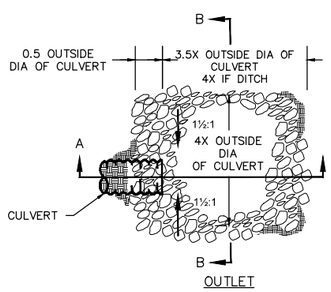

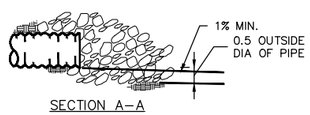

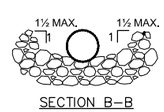

NOTES:

1. HAND PLACE ROCKS.
2. ALL ROCKS SHALL BE ANGULAR AND HAVE TWO FACES.
3. ROCK SLOPE PROTECTION SHALL BE SLOPED AT A MIN. OF 1% INTO OR OUT OF CULVERT.
4. ON OUTLET APPLICATIONS, 50% OF THE ROCKS SHALL BE LARGER THAN HALF THE DIAMETER OF THE PIPE.

DRAIN OUTLET ROCK PROTECTION (4 / –)

NOT TO SCALE

1–800–227–2600 CALL BEFORE YOU DIG USA UNDERGROUND SERVICE ALERT

90% SUBMITTAL

DATE: 8/23/18	TIME: 5:20:20 PM	NO.	BY	DATE	REVISIONS:
SERVER: SA–FILE	LAYOUT: CD1.0				
XREFS: TB–22X34L					
DRAWING NAME: CD1.0.DWG					
PAGE SETUP: 11x17 _PDF					
DESIGNER: VMA	PROJ. MGR: VMA				

CAUTION: The engineer preparing these plans will not be responsible for, or liable for, unauthorized changes to or uses of these plans. All changes to the plans must be in writing and must be approved by the preparer of these plans.

REGISTERED PROFESSIONAL ENGINEER Victor M. Alonzo No. C57825 EXP. 6/30/20 CIVIL STATE OF CALIFORNIA

NV5
2525 NATOMAS PARK DR. STE. 300 SACRAMENTO, CA 95833
916.641.9100 TEL 916.641.9222 FAX WWW.NV5.COM

CASA de FRUTA Celebrating Over 100 Years

CASA DE FRUTA
WATER SYSTEM IMPROVEMENTS
CIVIL DETAILS
DETAILS - 1

PREPARED FOR: CASA DE FRUTA DATE SUBMITTED: 8/23/2018

SHEET NUMBER CD1.0
12 OF 16 SHEETS
SCALE VERTICAL: 1"=10' HORIZONTAL: 1"=40'
JOB NUMBER MTB022100

MICAELA.ROBERTSON
P:\2262\226218–XXXXX–XX CASA DE FRUTA\CADD\IP\CIVIL DETAILS

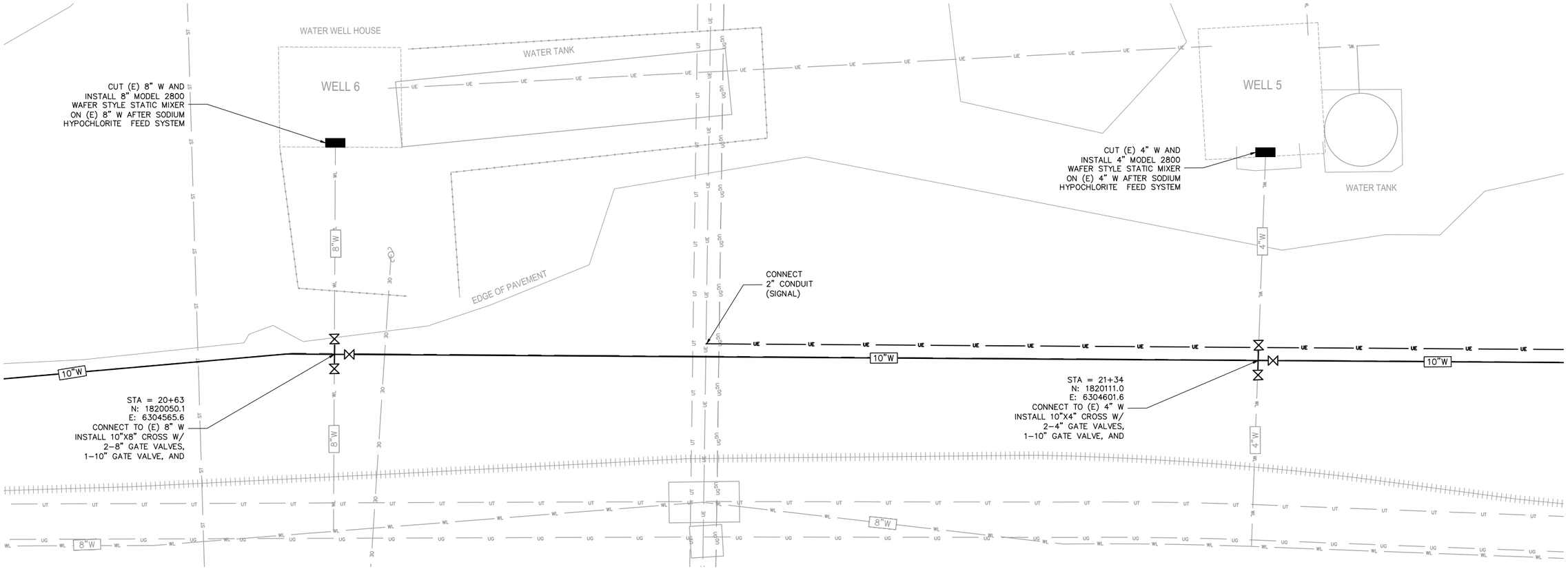

WELL CONNECTION DETAIL (1 / C1.1 / C1.2)

NOT TO SCALE

0 4 8

1" = 4'

90% SUBMITTAL

DATE: 9/6/18	TIME: 4:07:01 PM		
SERVER: SA-FILE	LAYOUT: CD1.1		
XREFS: TB-22X34L			
DRAWING NAME: CD1.1.DWG			
PAGE SETUP: 11x17 _PDF			
DESIGNER: VMA	PROJ. MGR: VMA		

NO.	BY	DATE	REVISIONS:

CAUTION: The engineer preparing these plans will not be responsible for, or liable for, unauthorized changes to or uses of these plans. All changes to the plans must be in writing and must be approved by the preparer of these plans.

NV5
2525 NATOMAS PARK DR. STE. 300 SACRAMENTO, CA 95833
916.641.9100 TEL 916.641.9222 FAX WWW.NV5.COM

CASA de FRUTA
Celebrating Over 100 Years

CASA DE FRUTA
WATER SYSTEM IMPROVEMENTS

CIVIL DETAILS

DETAILS - 2

PREPARED FOR: CASA DE FRUTA DATE SUBMITTED: 8/23/2018

SHEET NUMBER
CD1.1
13 OF 16 SHEETS

SCALE
VERTICAL: N/A
HORIZONTAL: 1"=4'

JOB NUMBER
MTB022100

NINOM
\\NV5.COM\PANZURA\INF\PROJECTS\2262\226218-XXXXX-XX CASA DE FRUTA\CADD\IP\CIVIL DETAILS

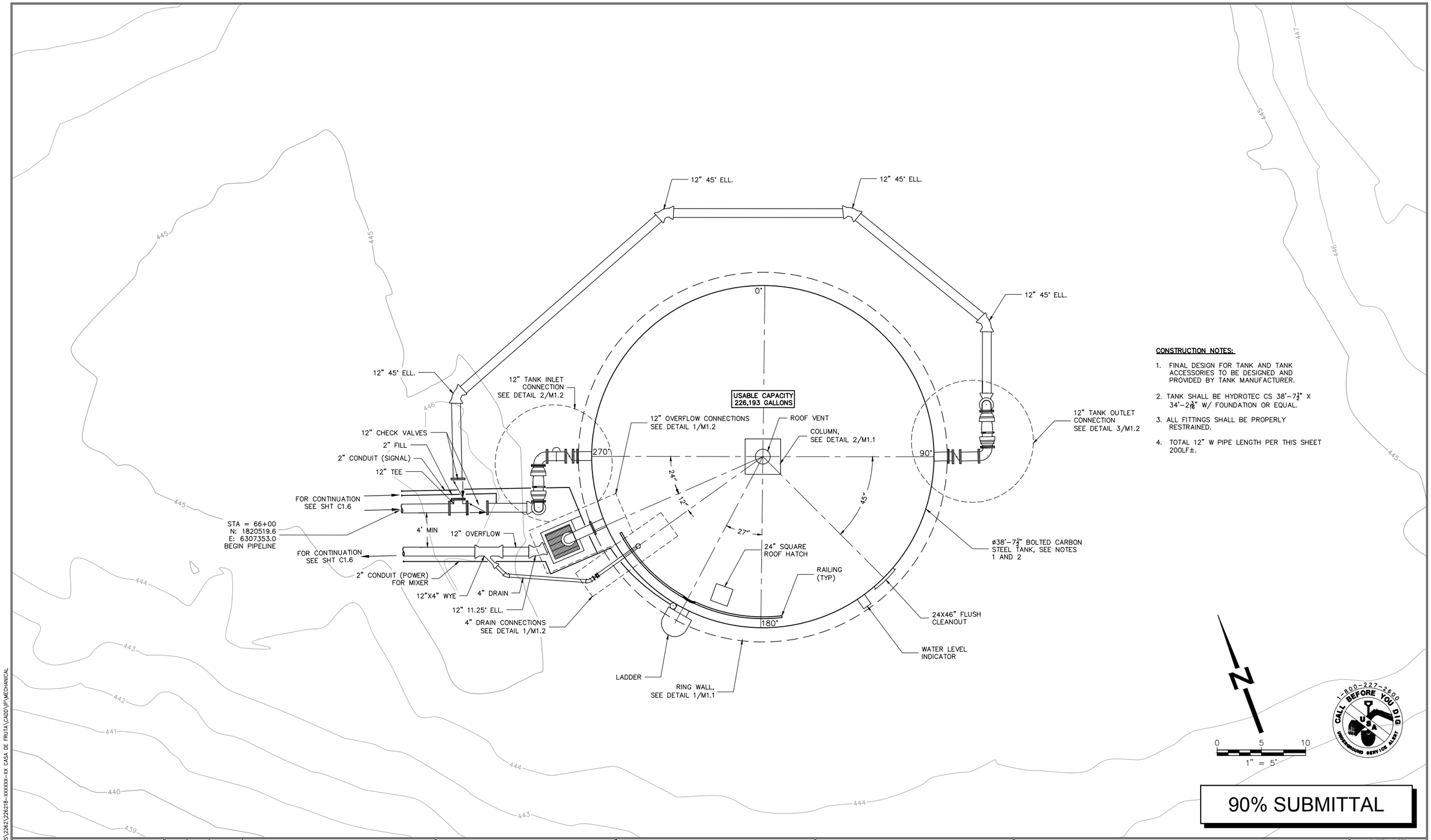

CONSTRUCTION NOTES:

1. FINAL DESIGN FOR TANK AND TANK ACCESSORIES TO BE DESIGNED AND PROVIDED BY TANK MANUFACTURER.
2. TANK SHALL BE HYDROTEC CS 38'-7½" X 34'-2 3/16" W/ FOUNDATION OR EQUAL.
3. ALL FITTINGS SHALL BE PROPERLY RESTRAINED.
4. TOTAL 12" W PIPE LENGTH PER THIS SHEET 200LF±.

90% SUBMITTAL

DATE: 9/14/18	TIME: 8:53:18 AM		
SERVER: SA-FILE	LAYOUT: M1.0		
XREFS: TB-22X34L			
DRAWING NAME: M1.0.DWG			
PAGE SETUP: 11x17 _PDF			
DESIGNER: VMA	PROJ. MGR: VMA		

NO.	BY	DATE	REVISIONS:

CAUTION: *The engineer preparing these plans will not be responsible for, or liable for, unauthorized changes to or uses of these plans. All changes to the plans must be in writing and must be approved by the preparer of these plans.*

NV5
2525 NATOMAS PARK DR. STE. 300 SACRAMENTO, CA 95833
916.641.9100 TEL 916.641.9222 FAX WWW.NV5.COM

CASA de FRUTA®
Celebrating Over 100 Years

CASA DE FRUTA
WATER SYSTEM IMPROVEMENTS

MECHANICAL

TANK SITE PLAN

PREPARED FOR: CASA DE FRUTA **DATE SUBMITTED: 8/23/2018**

SHEET NUMBER
M1.0
14 OF 16 SHEETS

SCALE
VERTICAL:
HORIZONTAL: 1"=5'

JOB NUMBER
MTB022100

NINOM
\\NV5.COM\PANZURA\INF\PROJECTS\2262\226218-XXXXXX-XX CASA DE FRUTA\CADD\P\MECHANICAL

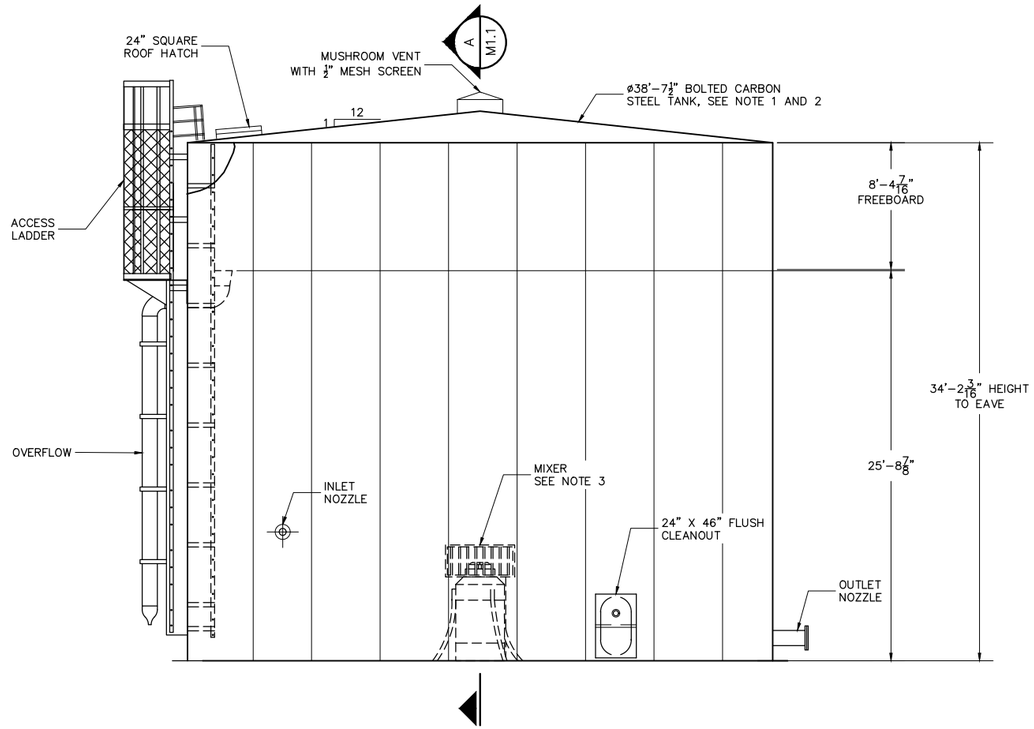

CONSTRUCTION NOTES:

1. FINAL DESIGN FOR TANK AND TANK ACCESSORIES TO BE DESIGNED AND PROVIDED BY TANK MANUFACTURER.
2. TANK SHALL BE HYDROTEC CS 38.622FT X 34.180FT W/FOUNDATION OR EQUAL.
3. MIXER KASCO CERTISAFE RM-100 OR EQUAL.
4. SEE DWG. M1.0, FOR TRUE ORIENTATION OF PIPING AND ACCESSORIES.

TANK ELEVATION

SCALE: 1"=5'

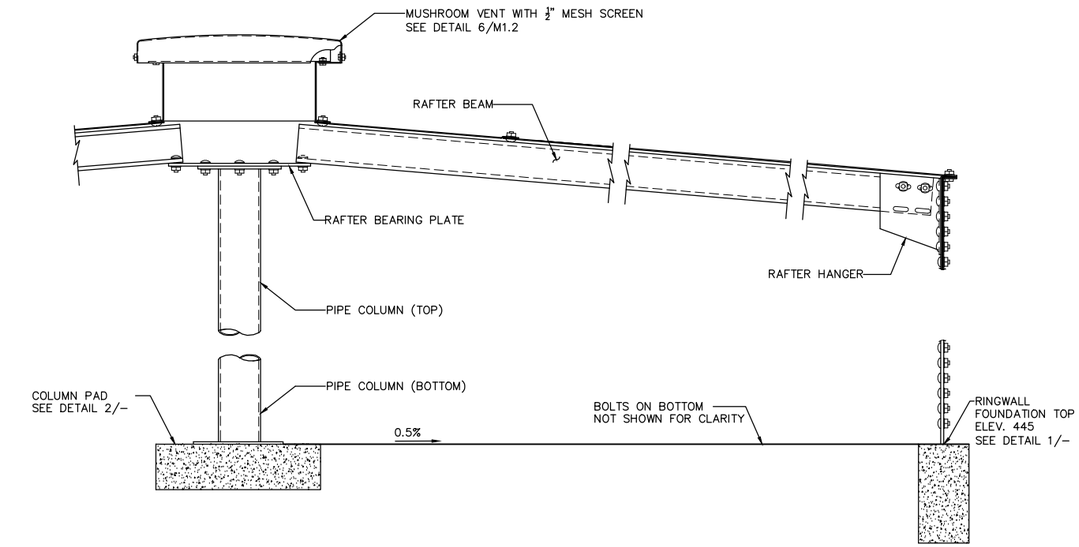

NOTE: FINAL DESIGN FOR TANK COLUMN PAD TO BE PROVIDED BY TANK MANUFACTURER

TANK SECTION

NOT TO SCALE

A / M1.0

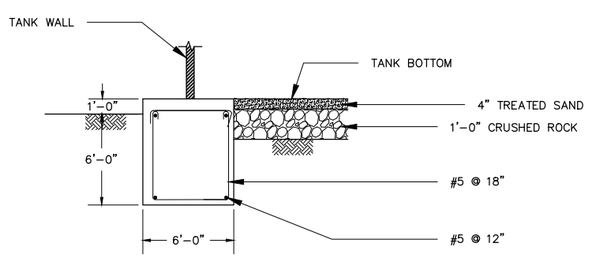

NOTE: FINAL DESIGN FOR TANK COLUMN PAD TO BE PROVIDED BY TANK MANUFACTURER

TANK RING WALL

NOT TO SCALE

1 / -

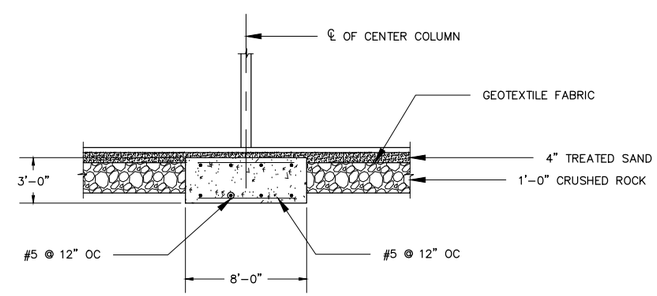

NOTE: FINAL DESIGN FOR TANK COLUMN PAD TO BE PROVIDED BY TANK MANUFACTURER

TANK COLUMN PAD

NOT TO SCALE

2 / -

1-800-227-2600 CALL BEFORE YOU DIG USA UNDERGROUND SERVICE ALERT

90% SUBMITTAL

DATE: 8/27/18 TIME: 11:53:52 AM	NO.	BY	DATE	REVISIONS:
SERVER: SA-FILE LAYOUT: M1.1				
XREFS: TB-22X34L				
DRAWING NAME: M1.1.DWG				
PAGE SETUP: 11x17 _PDF				
DESIGNER: VMA PROJ. MGR: VMA				

CAUTION: The engineer preparing these plans will not be responsible for, or liable for, unauthorized changes to or uses of these plans. All changes to the plans must be in writing and must be approved by the preparer of these plans.

REGISTERED PROFESSIONAL ENGINEER Victor M. Alaniz No. C57825 EXP. 6/30/20 CIVIL STATE OF CALIFORNIA

NV5
2525 NATOMAS PARK DR. STE. 300 SACRAMENTO, CA 95833
916.641.9100 TEL 916.641.9222 FAX WWW.NV5.COM

CASA de FRUTA Celebrating Over 100 Years

CASA DE FRUTA
WATER SYSTEM IMPROVEMENTS
MECHANICAL
TANK DETAILS AND SECTIONS - 1

PREPARED FOR: CASA DE FRUTA DATE SUBMITTED: 8/23/2018

SHEET NUMBER M1.1
15 OF 16 SHEETS
SCALE VERTICAL: N/A HORIZONTAL: N/A
JOB NUMBER MTB022100

MICAELA.ROBERTSON
P:\2262\226218-XXXXXX-XX CASA DE FRUTA\CADD\IP\MECHANICAL

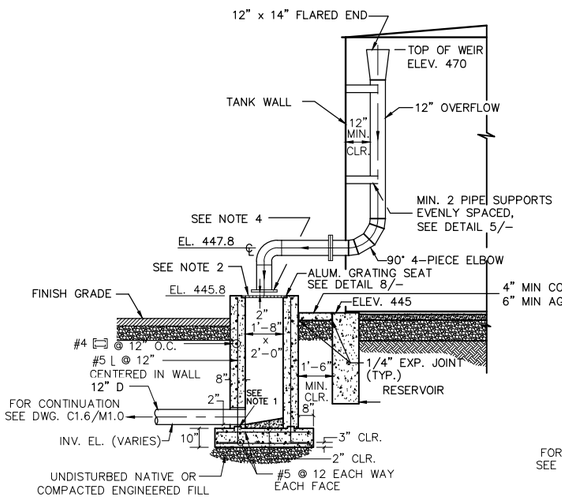

OVERFLOW CONNECTION DETAIL (1 / M1.0)

NOT TO SCALE

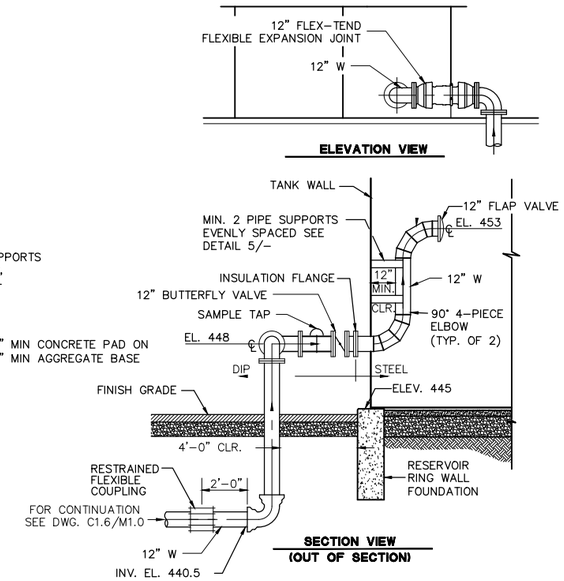

INLET CONNECTION DETAIL (2 / M1.0)

NOT TO SCALE

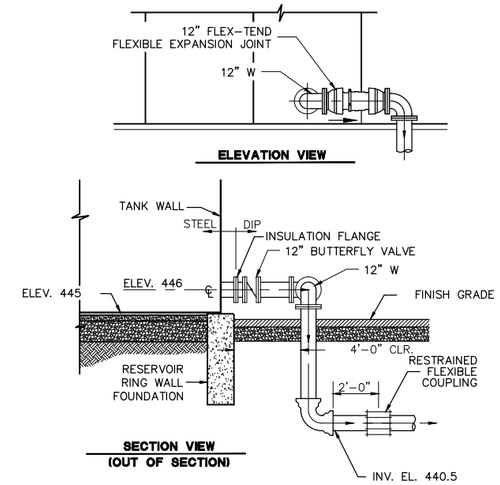

OUTLET CONNECTION DETAIL (3 / M1.0)

NOT TO SCALE

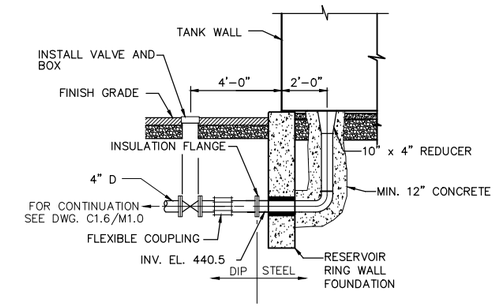

TANK DRAIN DETAIL (4 / M1.0)

NOT TO SCALE

NOTES (FOR DETAILS 1–4):

1. 1–1/2" x 3–1/2" KEY w/6" PVC WATERSTOP (TYP.)
2. ALUMINUM GRATING IKG BORDEN TYPE B PRESSURE LOCKED OR EQUAL (D=1").
3. CEMENT GROUT FILLET BOTTOM OF OVERFLOW BOX.
4. INSTALL VERMIN SCREEN ON OVERFLOW FLANGE. TYPE 316 SST STANDARD GRADE WOVEN WIRE CLOTH, MIN. 10x10 MESH SIZE. MAKE INSTALLATION ON THE FLANGE REMOVABLE.
5. CONTRACTOR SHALL SUBMIT FOR REVIEW AND APPROVAL ALL TANK RESERVOIR PIPE SUPPORTS.
6. ALL FITTINGS SHALL BE PROPERLY RESTRAINED.

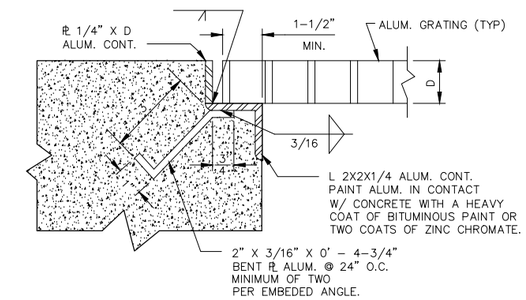

ALUMINUM GRATING SEAT DETAIL (8 / -)

NOT TO SCALE

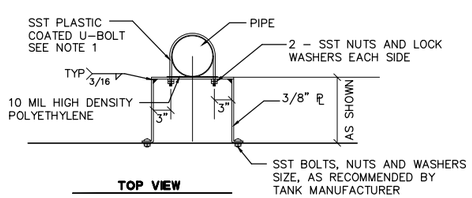

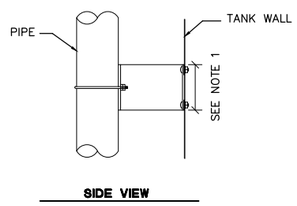

NOTES:

1. TANK MANUFACTURER TO PROVIDE DIMENSIONS FOR PIPE SUPPORTS.

PIPE SUPPORT DETAIL (5 / -)

NOT TO SCALE

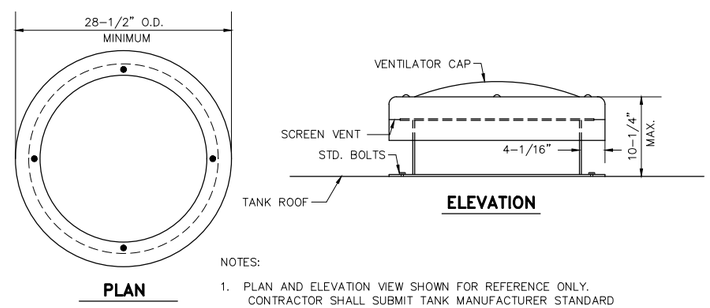

NOTES:

1. PLAN AND ELEVATION VIEW SHOWN FOR REFERENCE ONLY. CONTRACTOR SHALL SUBMIT TANK MANUFACTURER STANDARD ROOF VENT FOR APPROVAL.

ROOF VENT DETAIL (6 / -)

NOT TO SCALE

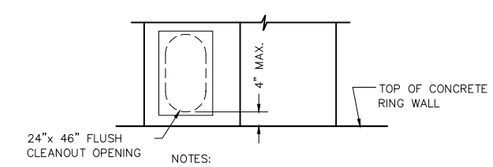

NOTES:

1. ELEVATION VIEW SHOWN FOR REFERENCE ONLY. CONTRACTOR SHALL SUBMIT TANK MANUFACTURER STANDARD FLUSH CLEANOUT DETAIL FOR APPROVAL.

FLUSH CLEANOUT DETAIL (7 / -)

NOT TO SCALE

CALL 1-800-227-2600 BEFORE YOU DIG — UNDERGROUND SERVICE ALERT

90% SUBMITTAL

DATE: 8/27/18	TIME: 12:09:28 PM
SERVER: SA-FILE	LAYOUT: M1.2
XREFS: TB-22X34L	
DRAWING NAME: M1.2.DWG	
PAGE SETUP: 11x17 _PDF	
DESIGNER: VMA	PROJ. MGR: VMA

NO.	BY	DATE	REVISIONS:

CAUTION: The engineer preparing these plans will not be responsible for, or liable for, unauthorized changes to or uses of these plans. All changes to the plans must be in writing and must be approved by the preparer of these plans.

REGISTERED PROFESSIONAL ENGINEER — Victor M. Alonzo — No. C57825 — EXP. 6/30/20 — CIVIL — STATE OF CALIFORNIA

NV5
2525 NATOMAS PARK DR. STE. 300 SACRAMENTO, CA 95833
916.641.9100 TEL 916.641.9222 FAX WWW.NV5.COM

CASA de FRUTA — Celebrating Over 100 Years

CASA DE FRUTA
WATER SYSTEM IMPROVEMENTS

MECHANICAL

TANK DETAILS AND SECTIONS - 2

PREPARED FOR: CASA DE FRUTA DATE SUBMITTED: 8/23/2018

SHEET NUMBER M1.2 — 16 OF 16 SHEETS

SCALE VERTICAL: N/A HORIZONTAL: N/A

JOB NUMBER MTB022100

MICAELA.ROBERTSON
P:\2262\226218-XXXXX-XX CASA DE FRUTA\CADD\IP\MECHANICAL