COUNTY OF SANTA CLARA
General Construction Specifications

GENERAL CONDITIONS

1. ALL CONSTRUCTION WORK SHALL BE PERFORMED IN ACCORDANCE WITH THE SOILS AND/OR GEOTECHNICAL REPORT PREPARED BY THIS REPORT IS SUPPLEMENTED BY: 1) THESE PLANS AND SPECIFICATIONS, 2) THE COUNTY OF SANTA CLARA STANDARD DETAILS. 3) THE COUNTY OF SANTA CLARA STANDARD SPECS, 4) STATE OF CALIFORNIA STANDARD DETAILS, 5) STATE OF CALIFORNIA STANDARD SPECIFICATIONS. IN THE EVENT OF CONFLICT THE FORMER SHALL TAKE PRECEDENCE OVER THE LATTER. THE PERFORMANCE AND COMPLETION OF ALL WORK MUST BE TO THE SATISFACTION OF THE COUNTY.
2. DEVELOPER IS RESPONSIBLE FOR INSTALLATION OF THE IMPROVEMENTS SHOWN ON THESE PLANS AND HE OR HIS SUCCESSOR PROPERTY OWNERS ARE RESPONSIBLE FOR THEIR CONTINUED MAINTENANCE.
3. DEVELOPER SHALL BE RESPONSIBLE FOR CORRECTION OF ANY ERRORS OR OMISSIONS IN THESE PLANS. THE COUNTY SHALL BE AUTHORIZED TO REQUIRE DISCONTINUANCE OF ANY WORK AND SUCH CORRECTION AND MODIFICATION OF PLANS AS MAY BE NECESSARY TO COMPLY WITH COUNTY STANDARDS OR CONDITIONS OF DEVELOPMENT APPROVAL.
4. DEVELOPER SHALL OBTAIN ENCROACHMENT PERMITS FROM THE SANTA CLARA VALLEY WATER DISTRICT AND CALIFORNIA DEPARTMENT OF TRANSPORTATION WHERE NEEDED. COPIES OF THESE PERMITS SHALL BE KEPT AT THE JOB SITE FOR REVIEW BY THE COUNTY'S INSPECTOR.
5. DEVELOPER SHALL REMOVE OR TRIM ALL TREES TO PROVIDE AN UNOBSTRUCTED FIFTEEN (15) FOOT VERTICAL CLEARANCE FOR ROADWAY AREA.
6. THIS PLAN AUTHORIZES THE REMOVAL OF ONLY THOSE TREES WITH TRUNK DIAMETERS GREATER THAN 12 INCHES MEASURED 4.5 FEET ABOVE THE GROUND THAT ARE SHOWN TO BE REMOVED UNLESS AN AMENDED PLAN IS APPROVED OR A SEPARATE TREE REMOVAL PERMIT IS OBTAINED FROM THE PLANNING OFFICE. IT IS THE CONTRACTOR'S RESPONSIBILITY TO ENSURE THAT REMOVAL OF ADDITIONAL TREES HAS BEEN PERMITTED.
7. DEVELOPER SHALL PROVIDE ADEQUATE DUST CONTROL AS REQUIRED BY THE COUNTY INSPECTOR.
8. ALL PERSONS MUST COMPLY WITH SECTION 4442 OF THE PUBLIC RESOURCES CODE AND SECTION 13005 OF THE HEALTH AND SAFETY CODE RELATING TO THE USE OF SPARK ARRESTERS.
9. UPON DISCOVERING OR UNEARTHING ANY BURIAL SITE AS EVIDENCED BY HUMAN SKELETAL REMAINS OR ARTIFACTS, THE PERSON MAKING SUCH DISCOVERY SHALL IMMEDIATELY NOTIFY THE COUNTY CORONER AT (408) 454-2520 AND LAND DEVELOPMENT ENGINEERING OFFICE AT (408) 299-5730. NO FURTHER DISTURBANCE OF THE SITE MAY BE MADE EXCEPT AS AUTHORIZED BY THE LAND DEVELOPMENT OFFICE IN ACCORD WITH PROVISIONS OF THIS ORDINANCE (COUNTY ORDINANCE CODE SECTION 96-18).
10. THESE PLANS ARE FOR THE WORK DESCRIBED IN THE SCOPE OF WORK ONLY. A SEPARATE PERMIT WILL BE REQUIRED FOR THE SEPTIC LINE CONSTRUCTION.
11. ANY DEVIATION FROM THESE APPROVED PLANS SHALL BE RE-APPROVED IN WRITING BY THE COUNTY ENGINEER PRIOR TO CONSTRUCTION.

CONSTRUCTION STAKING

1. THE DEVELOPER'S ENGINEER IS RESPONSIBLE FOR THE INITIAL PLACEMENT AND REPLACEMENT OF CONSTRUCTION GRADE STAKES. THE STAKES ARE TO BE ADEQUATELY IDENTIFIED, LOCATED, STABILIZED, ETC. FOR THE CONVENIENCE OF CONTRACTORS. LATERAL OFFSET OF STAKES SET FOR CURBS AND GUTTERS SHALL NOT EXCEED 2 1/2 FEET FROM BACK OF CURB.
2. ANY PROPERTY LINE STAKES OR ROAD MONUMENTS DISTURBED DURING CONSTRUCTION SHALL BE REPLACED BY DEVELOPER'S ENGINEER AND LICENSED LAND SURVEYOR.
3. PROPERTY LINE STAKING MUST BE PERFORMED BY THE PROJECT ENGINEER OR LAND SURVEYOR TO ESTABLISH OR RE-ESTABLISH THE PROJECT BOUNDARY AND SHALL BE INSPECTED BY THE COUNTY INSPECTOR PRIOR TO THE BEGINNING OF THE WORK.
4. PROPER CONSTRUCTION STAKES SHALL BE SET IN THE FIELD BY THE PROJECT ENGINEER OR LAND SURVEYOR AND VERIFIED BY THE COUNTY INSPECTOR PRIOR TO THE COMMENCEMENT OF GRADING.
5. IN ACCORDANCE WITH THE CALIFORNIA PROFESSIONAL LAND SURVEYORS' ACT (BUSINESS AND PROFESSIONS CODE) CHAPTER 15 SECTIONS 8771 AND 8725.1, CALIFORNIA PENAL CODE 605, AND CALIFORNIA GOVERNMENT CODE 27581, ANY PERSON PERFORMING CONSTRUCTION ACTIVITIES THAT WILL OR MAY DISTURB AN EXISTING ROADWAY/STREET MONUMENT, PROPERTY CORNER, OR ANY OTHER PERMANENT SURVEYED MONUMENT AND/OR AS SHOWN ON THIS TENTATIVE MAP SHALL ENSURE THAT A CORNER RECORD AND/OR RECORD OF SURVEY ARE FILED WITH THE OCUNTY SURVEYOR OFFICE PRIOR TO DISTURBING SAID MONUMENTS. ALL DISTURBED OR DESTROYED MONUMENTS SHALL BE RESET AND FILED IN COMPLIANCE WITH SECTION 8771.

CONSTRUCTION INSPECTION

1. CONTRACTOR SHALL NOTIFY PERMIT INSPECTION UNIT, SANTA CLARA COUNTY PRIOR TO COMMENCING WORK AND FOR FINAL INSPECTION OF WORK AND SITE.
2. THE COUNTY REQUIRES A MINIMUM OF 24 HOURS ADVANCE NOTICE FOR GENERAL INSPECTION, 48 HOURS FOR ASPHALT CONCRETE INSPECTION.
3. INSPECTION BY SANTA CLARA COUNTY SHALL BE LIMITED TO INSPECTION OF MATERIALS AND PROCESSES OF CONSTRUCTION TO OBSERVE THEIR COMPLIANCE WITH PLANS & SPECIFICATIONS BUT DOES NOT INCLUDE RESPONSIBILITY FOR THE SUPERINTENDENT OF CONSTRUCTION, SITE CONDITIONS, EQUIPMENT OR PERSONNEL. CONTRACTOR SHALL NOTIFY THE COUNTY LAND DEVELOPMENT INSPECTOR AT PHONE (408) 299-6868 AT LEAST 24 HOURS PRIOR TO COMMENCING WORK AND FOR FINAL INSPECTION OF WORK AND SITE.
4. DEVELOPER AND/OR HIS AUTHORIZED REPRESENTATIVE MUST SUBMIT WRITTEN REQUEST FOR FINAL INSPECTION AND ACCEPTANCE. SAID REQUEST SHALL BE DIRECTED TO THE INSPECTION OFFICE NOTED ON THE PERMIT FORM.
5. THE CONTRACTOR SHALL PROVIDE TO THE COUNTY CONSTRUCTION INSPECTOR WITH PAD ELEVATION AND LOCATION CERTIFICATES, PREPARED BY THE PROJECT ENGINEER OR LAND SURVEYOR, PRIOR COMMENCEMENT OF THE BUILDING FOUNDATION.

SITE PREPARATION (CLEARING AND GRUBBING)

1. EXISTING TREES AUTHORIZED FOR REMOVAL, ROOTS, AND FOREIGN MATERIAL IN AREAS TO BE IMPROVED WILL BE REMOVED TO AN AUTHORIZED DISPOSAL SITE AS FOLLOWS:
   A) TO A MINIMUM DEPTH OF TWO FEET BELOW THE FINISHED GRADE OF PROPOSED ROADWAYS (EITHER PRIVATE OR TO BE DEDICATED TO PUBLIC USE)
   B) FROM AREAS AFFECTED BY THE PROPOSED GRADING EXCEPT WHERE NOTED ON THE PLANS.
2. IT SHALL BE THE RESPONSIBILITY OF THE DEVELOPER TO MOVE OR RELOCATE UTILITY POLES AND OTHER OBSTRUCTIONS IN THE WAY OF CONSTRUCTION.

UTILITY LOCATION, TRENCHING & BACKFILL

1. CONTRACTOR SHALL NOTIFY USA (UNDERGROUND SERVICE ALERT) AT 1-800-277-2600 A MINIMUM OF 24 HOURS BEFORE BEGINNING UNDERGROUND WORK FOR VERIFICATION OF THE LOCATION OF UNDERGROUND UTILITIES.
2. ACCURATE VERIFICATION AS TO SIZE, LOCATION, AND DEPTH OF EXISTING UNDERGROUND CONDUITS OR FACILITIES SHALL BE THE INDIVIDUAL CONTRACTORS RESPONSIBILITY. PLAN LOCATIONS ARE APPROXIMATE AND FOR GENERAL INFORMATION ONLY.
3. ALL UNDERGROUND INSTALLATIONS SHALL BE IN PLACE AND THE TRENCH BACKFILLED AND COMPACTED BEFORE PLACING AGGREGATE BASE MATERIAL OR SURFACE STRUCTURES. SURFACING MAY BE DONE IF THE UTILITY COMPANY CONCERNED INDICATES BY LETTER THAT IT WILL BORE. UNLESS SPECIFICALLY AUTHORIZED BY THE COUNTY, GAS AND WATER MAINS SHALL BE INSTALLED OUTSIDE THE PAVED AREAS.
4. TRENCH BACKFILL IN EXISTING PAVEMENT AREAS SHALL BE SAND MATERIAL IN ACCORDANCE WITH THE APPLICABLE PROVISIONS OF THE STATE SPECIFICATIONS. THE STRUCTURAL SECTION FOR TRENCH REPLACEMENT SHALL CONSIST OF NOT LESS THAN 12 INCHES OF APPROVED AGGREGATE BASE MATERIAL COMPACTED TO A RELATIVE COMPACTION OF AT LEAST 95% AND 4 INCHES OF HOT ASPHALT CONCRETE PLACED IN TWO LIFTS. TRENCH RESTORATION FOR HIGHER TYPE PAVEMENTS SHALL BE MADE IN KIND OR AS DIRECTED BY THE COUNTY.
5. TRENCH BACKFILL IN NEW CONSTRUCTION AREAS SHALL BE SAND MATERIAL COMPACTED TO A RELATIVE COMPACTION OF AT LEAST 90%. THE REQUIREMENT FOR SELECT MATERIAL MAY BE WAIVED BY COUNTY IF THE NATIVE SOIL IS SUITABLE FOR USE AS TRENCH BACKFILL BUT THE COMPACTION REQUIREMENTS WILL NOT BE THEREBY WAIVED.
6. BACKFILL AND TRENCH RESTORATION REQUIREMENTS SHALL APPLY AS MINIMUM STANDARDS TO ALL UNDERGROUND FACILITIES INSTALLED BY OTHER FIRMS OR PUBLIC AGENCIES.

REVISED 11-26-14

RETAINING WALLS

1. REINFORCED CONCRETE AND CONCRETE MASONRY UNIT RETAINING WALLS SHALL HAVE FOUNDATION AND REINFORCEMENT INSPECTED BY THE COUNTY ENGINEERING INSPECTOR AND ENGINEER OF RECORD PRIOR TO POURING THE FOUNDATION AND FORMING THE WALL.
2. SEGMENTAL BLOCK RETAINING WALLS SHALL HAVE FOUNDATION AND REINFORCEMENT INSPECTED BY THE COUNTY ENGINEERING INSPECTOR.

GRADING

1. EXCAVATED MATERIAL SHALL BE PLACED IN THE FILL AREAS DESIGNATED OR SHALL BE HAULED AWAY FROM THE SITE TO A COUNTY APPROVED DISPOSAL SITE. WHERE FILL MATERIAL IS TO BE PLACED ON NATURAL GROUND, IS SHALL BE STRIPPED OF ALL VEGETATION. TO ACHIEVE A PROPER BOND WITH THE FILL MATERIAL, THE SURFACE OF THE GROUND SHALL BE SCARIFIED TO DEPTH OF 6" BEFORE FILL IS PLACED. WHERE NATURAL GROUND IS STEEPER THAN 5:1, IT SHALL BE BENCHED AND THE FILL KEYED IN TO ACHIEVE STABILITY. WHERE NEW FILL IS TO BE PLACED ON EXISTING FILL THE EXISTING FILL SHALL BE REMOVED UNTIL MATERIAL COMPACTED TO 90% RELATIVE COMPACTION IS EXPOSED. THEN THE NEW FILL MATERIAL SHALL BE PLACED AS PER THESE CONSTRUCTION NOTES. FILL MATERIAL SHALL BE PLACED IN UNIFORM LIFTS NOT EXCEEDING 6" IN UNCOMPACTED THICKNESS. BEFORE COMPACTION BEGINS, THE FILL SHALL BE BROUGHT TO A WATER CONTENT THAT WILL PERMIT PROPER COMPACTION BY EITHER 1) AERATING THE FILL IF IT IS TOO WET OR 2) MOISTENING THE FILL WITH WATER IF IT IS TOO DRY. EACH LIFT SHALL BE THOROUGHLY MIXED BEFORE COMPACTION TO ENSURE A UNIFORM DISTRIBUTION OF MOISTURE.
2. EXCESS CUT MATERIAL SHALL NOT BE SPREAD OR STOCKPILED ON THE SITE.
3. SURPLUS EARTH FILL MATERIAL SHALL BE PLACED IN A SINGLE (8" MAX) THICK LAYER COMPACTED TO WITHSTAND WEATHERING IN THE AREA(S) DELINEATED ON THE PLAN.
4. NO ORGANIC MATERIAL SHALL BE PLACED IN ANY FILL. NO TREES SHALL BE REMOVED OUTSIDE OF CUT, FILL OR ROADWAY AREAS.
5. THE UPPER 6" OF SUBGRADE BELOW DRIVEWAY ACCESS ROAD OR PARKING AREA SHALL BE COMPACTED TO 95% OF MAXIMUM DENSITY.
6. MAXIMUM CUT SLOPE SHALL BE 2 HORIZONTAL TO 1 VERTICAL. MAXIMUM FILL SLOPE SHALL BE 2 HORIZONTAL TO 1 VERTICAL.

LOCATION	CUT (C.Y.)	FILL (C.Y.)	VERT. DEPTH
BUILDING	219	97	±1
PATIO	132	43	±1.5
POND	14	0	±2
TOTAL	±365	±140	

NOTE: FILL VOLUMES INCLUDE 10% SHRINKAGE.
EXCESS MATERIAL SHALL BE OFF HAULED TO A COUNTY APPROVED DUMP SITE.

7. NOTIFY SOILS ENGINEER TWO (2) DAYS PRIOR TO COMMENCEMENT OF ANY GRADING WORK TO COORDINATE THE WORK IN THE FIELD.
8. ALL MATERIALS FOR FILL SHOULD BE APPROVED BY THE SOILS ENGINEER BEFORE IT IS BROUGHT TO THE SITE.
9. THE UPPER 6" OF THE SUBGRADE SOIL SHALL BE SCARIFIED, MOISTURE CONDITIONED AND COMPACTED TO A MINIMUM RELATIVE COMPACTION OF 95%
10. ALL AGGREGATE BASE MATERIAL SHALL BE COMPACTED TO A MINIMUM 95% RELATIVE COMPACTION.
11. THE GEOTECHNICAL PLAN REVIEW LETTER MUST BE REVIEWED AND APPROVED BY THE COUNTY GEOLOGIST PRIOR TO FINAL APPROVAL BY THE COUNTY ENGINEER FOR BUILDING OCCUPANCY.
12. THE PROJECT GEOTECHNICAL ENGINEER SHALL PERFORM COMPACTION TESTING AND PRESENT THE RESULTS TO THE COUNTY ENGINEERING INSPECTOR PRIOR TO THE CONSTRUCTION OF ANY PAVED AREA.
13. GRADING WORK BETWEEN OCTOBER 15TH AND APRIL 15TH IS AT THE DISCRETION OF THE SANTA CLARA COUNTY GRADING OFFICIAL.
14. TOTAL DISTURBED AREA FOR THE PROJECT _____SF.
15. WDID NO. _____
16. THE INSPECTOR MAY VERIFY THAT A VALID NOTICE OF INTENT (NOI) HAS BEEN ISSUED BY THE STATE AND THAT A CURRENT AND UP TO DATE STORM WATER POLLUTION PREVENTION PLAN (SWPPP) IS AVAILABLE ON SITE.

TREE PROTECTION

1. FOR ALL TREES TO BE RETAINED WITH A CANOPY IN THE DEVELOPMENT AREA OR INTERFACES WITH THE LIMITS OF GRADING FOR ALL PROPOSED DEVELOPMENT ON SITE, THE TREES SHALL BE PROTECTED BY THE PLACEMENT OF RIGID TREE PROTECTIVE FENCING, CONSISTENT WITH THE COUNTY INTEGRATED LANDSCAPE GUIDELINES, AND INCLUDE THE FOLLOWING:
   A. FENCING SHOULD BE PLACED ALONG THE OUTSIDE EDGE OF THE DRIPLINE OF THE TREE OR GROVE OF TREES.
   B. THE FENCING SHALL BE MAINTAINED THROUGHOUT THE SITE CONSTRUCTION PERIOD AND SHALL BE INSPECTED PERIODICALLY FOR DAMAGE AND PROPER FUNCTION.
   C. FENCING SHALL BE REPAIRED, AS NECESSARY, TO PROVIDE A PHYSICAL BARRIER FROM CONSTRUCTION ACTIVITIES.
   D. SIGNAGE STATING, "WARNING- THIS FENCING SHALL NOT BE REMOVED WITHOUT PERMISSION FROM THE SANTA CLARA COUNTY PLANNING OFFICE (408) 299-5770. COUNTY OF SANTA CLARA TREE PROTECTION MEASURES MAY BE FOUND AT http://www.sccplanning.gov." SHALL BE PLACED ON THE TREE PROTECTIVE FENCING UNTIL FINAL OCCUPANCY.
2. PRIOR TO COMMENCEMENT OF ANY CONSTRUCTION ACTIVITY, TREE PROTECTIVE FENCING SHALL BE SECURELY IN PLACED AND INSPECTED BY THE LAND DEVELOPMENT ENGINEERING INSPECTOR.
3. SEE EXISTING TREE PROTECTION DETAILS FOR MORE INFORMATION.

ACCESS ROADS AND DRIVEWAYS

1. DRIVEWAY LOCATIONS SHALL BE AS SHOWN ON THE IMPROVEMENT PLANS WITH CENTERLINE STATIONING. THE MINIMUM CONCRETE THICKNESS SHALL BE 6 INCHES THROUGHOUT (WITH A MAXIMUM APPROACH SLOPE OF 1 1/4 INCHES PER FOOT).
2. ALL DRIVEWAY OR COMMON ACCESS ROAD SECTIONS IN EXCESS OF 15 LONGITUDINAL SLOPE MUST BE PAVED WITH A MINIMUM 2-INCH ASPHALT LIFT OR FULL DEPTH CONCRETE LIFT PRIOR TO ANY COMBUSTIBLE FRAMING.
3. THE OWNER AND PRIME CONTRACTOR ARE RESPONSIBLE FOR MAINTAINING PROJECT SITE ACCESS AND NEIGHBORHOOD ACCESS FOR EMERGENCY VEHICLES AND LOCAL RESIDENTS.
4. ROADWAYS DESIGNATED AS NOT COUNTY MAINTAINED ROADS AS SHOWN ON THE PLAN WILL NOT BE ELIGIBLE FOR COUNTY MAINTENANCE UNTIL THE ROADWAYS ARE IMPROVED (AT NO COST TO THE COUNTY) TO THE PUBLIC MAINTENANCE ROAD STANDARDS APPROVED BY THE BOARD OF SUPERVISORS AND IN EFFECT AT SUCH TIME THAT THE ROADWAYS ARE CONSIDERED FOR ACCEPTANCE INTO THE COUNTY'S ROAD SYSTEM.
5. ALL WORK IN THE COUNTY ROAD RIGHT-OF-WAY REQUIRES AN ENCROACHMENT PERMIT FROM THE ROADS AND AIRPORTS DEPARTMENT. EACH INDIVIDUAL ACTIVITY REQUIRES A SEPARATE PERMIT - I.E. CABLE, ELECTRICAL, GAS, SEWER, WATER, RETAINING WALLS, DRIVEWAY APPROACHES, FENCES, LANDSCAPING, TREE REMOVAL, STORM DRAINAGE IMPROVEMENTS, ETC..

STREET LIGHTING

1. PACIFIC GAS & ELECTRIC ELECTROLIER SERVICE FEE SHALL BE PAID BY THE DEVELOPER AND/OR HIS AUTHORIZED REPRESENTATIVE.

SANITARY SEWER

1. THE SANITARY SEWER AND WATER UTILITIES SHOWN ON THESE PLANS ARE NOT PART OF THIS GRADING PERMIT AND ARE SHOWN FOR REFERENCE ONLY.
2. ALL MATERIALS AND METHODS OF CONSTRUCTION OF SANITARY SEWERS SHALL CONFORM TO THE SPECIFICATIONS OF THE JURISDICTION INVOLVED. INSPECTION OF SANITARY SEWER WORK SHALL BE DONE BY SAID JURISDICTION.

PORTLAND CEMENT CONCRETE

1. CONCRETE USED FOR STRUCTURAL PURPOSES SHALL BE CLASS "A" (6 SACK PER CUBIC YARD) AS SPECIFIED IN THE STATE STANDARD SPECIFICATIONS. CONCRETE PLACED MUST DEVELOP A MINIMUM STRENGTH FACTOR OF 2800 PSI IN A SEVEN-DAY PERIOD. THE CONCRETE MIX DESIGN SHALL BE UNDER THE CONTINUAL CONTROL OF THE COUNTY INSPECTOR.

AIR QUALITY, LANDSCAPING AND EROSION CONTROL

1. WATER ALL ACTIVE CONSTRUCTION AREAS AT LEAST TWICE DAILY.
2. COVER ALL TRUCKS HAULING SOIL, SAND, AND OTHER LOOSE MATERIALS OR REQUIRE ALL TRUCKS TO MAINTAIN AT LEAST TWO FEET OF FREEBOARD.
3. PAVE, APPLY WATER THREE TIMES DAILY, OR APPLY (NON-TOXIC) SOIL STABILIZERS ON ALL UNPAVED ACCESS ROADS, PARKING AREAS AND STAGING AREAS AT CONSTRUCTION SITES.
4. SWEEP DAILY (WITH WATER SWEEPERS) ALL PAVED ACCESS ROADS, PARKING AREAS AND STAGING AREAS AT CONSTRUCTION SITES. THE USE OF DRY POWDER SWEEPING IS PROHIBITED.
5. SWEEP STREETS DAILY (WITH WATER SWEEPERS) IF VISIBLE SOIL MATERIAL IS CARRIED ONTO ADJACENT PUBLIC STREETS. THE USE OF DRY POWDER SWEEPING IS PROHIBITED.
6. ALL CONSTRUCTION VEHICLES, EQUIPMENT AND DELIVERY TRUCKS SHALL HAVE A MAXIMUM IDLING TIME OF 5 MINUTES (AS REQUIRED BY THE CALIFORNIA AIRBORNE TOXIC CONTROL MEASURE TITLE 13, SECTION 2485 OF CALIFORNIA CODE OF REGULATIONS (CCR)). ENGINES SHALL BE SHUT OFF IF CONSTRUCTION REQUIRES LONGER IDLING TIME UNLESS NECESSARY FOR PROPER OPERATION OF THE VEHICLE.
7. ALL VEHICLE SPEEDS ON UNPAVED ROADS SHALL BE LIMITED TO 15 MILES PER HOUR.
8. ALL CONSTRUCTION EQUIPMENT SHALL BE MAINTAINED AND PROPERLY TUNED IN ACCORDANCE WITH MANUFACTURER'S SPECIFICATIONS. ALL EQUIPMENT SHALL BE CHECKED BY A CERTIFIED MECHANIC AND DETERMINED TO BE RUNNING IN PROPER CONDITION PRIOR TO OPERATION.
9. POST A SIGN THAT IS AT LEAST 32 SQUARE FEET MINIMUM 2 INCHES LETTER HEIGHT VISIBLE NEAR THE ENTRANCE OF CONSTRUCTION SITE THAT IDENTIFIES THE FOLLOWING REQUIREMENTS. OBTAIN ENCROACHMENT PERMIT FOR SIGN FROM ROADS DEPARTMENT OR OTHER APPLICABLE AGENCY IF REQUIRED.
   A. 15 MILES PER HOUR (MPH) SPEED LIMIT
   B. 5 MINUTES MAXIMUM IDLING TIME OF VEHICLES
   C. TELEPHONE NUMBER TO CONTACT THE BAY AREA AIR QUALITY MANAGEMENT DISTRICT REGARDING DUST COMPLAINTS. NOTE PHONE NUMBER OF THE BAY AREA AIR QUALITY MANAGEMENT DISTRICT AIR POLLUTION COMPLAIN HOTLINE OF 1-800-334-6367.
10. ALL FILL SLOPES SHALL BE COMPACTED AND LEFT IN A SMOOTH AND FIRM CONDITION CAPABLE OF WITHSTANDING WEATHERING.
11. ALL EXPOSED DISTURBED AREAS SHALL BE SEEDED WITH BROME SEED SPREAD AT THE RATE OF 5 LB. PER 1000 SQUARE FEET (OR APPROVED EQUAL). SEEDING AND WATERING SHALL BE MAINTAINED AS REQUIRED TO ENSURE GROWTH.
12. ALL DITCHES SHALL BE LINED PER COUNTY STANDARD SDB.
13. ALL STORM DRAINAGE STRUCTURES SHALL BE INSTALLED WITH EFFECTIVE ENTRANCE & OUTFALL EROSION CONTROLS E.G. SACKED CONCRETE RIP-RAP. ENERGY DISSIPATERS SHALL BE INSTALLED AT ALL DITCH OUTFALLS. WHERE OUTFALLS ARE NOT INTO AN EXISTING CREEK OR WATER COURSE, RUNOFF SHALL BE RELEASED TO SHEET FLOW.
14. PRIOR TO GRADING COMPLETION AND RELEASE OF THE BOND, ALL GRADED AREAS SHALL BE RESEEDED IN CONFORMANCE WITH THE COUNTY GRADING ORDINANCE TO MINIMIZE THE VISUAL IMPACTS OF THE GRADE SLOPES AND REDUCE THE POTENTIAL FOR EROSION OF THE SUBJECT SITE.
15. PERMANENT LANDSCAPING SHOWN ON THE ATTACHED LANDSCAPE PLAN MUST BE INSTALLED AND FIELD APPROVED BY THE COUNTY PLANNING OFFICE PRIOR TO FINAL APPROVAL BY THE COUNTY ENGINEER, AND FINAL OCCUPANCY RELEASE BY THE BUILDING INSPECTION OFFICE.
16. THE OWNER SHALL PREPARE AND PRESENT A WINTERIZATION REPORT TO THE COUNTY INSPECTOR FOR REVIEW PRIOR TO OCTOBER 15TH OF EVERY YEAR.
17. THE OWNER, CONTRACTOR, AND ANY PERSON PERFORMING CONSTRUCTION ACTIVITIES SHALL INSTALL AND MAINTAIN CONSTRUCTION BEST MANAGEMENT PRACTICES (BMPS) ON THE PROJECT SITE AND WITHIN THE SANTA CLARA COUNTY ROAD RIGHT-OF-WAY THROUGHOUT THE DURATION OF THE CONSTRUCTION AND UNTIL THE ESTABLISHMENT OF PERMANENT STABILIZATION AND SEDIMENT CONTROL TO PREVENT THE DISCHARGE OF POLLUTANTS INCLUDING SEDIMENT, CONSTRUCTION MATERIALS, EXCAVATED MATERIALS, AND WASTE INTO THE SANTA CLARA COUNTY RIGHT-OF-WAY, STORM SEWER WATERWAYS, ROADWAY INFRASTRUCTURE. BMPS SHALL INCLUDE, BUT NOT BE LIMITED TO THE FOLLOWING;
   A. PREVENTION OF POLLUTANTS IN STORM WATER DISCHARGES FROM THE CONSTRUCTION SITE AND THE CONTRACTOR'S MATERIAL AND EQUIPMENT LAYDOWN / STAGING AREAS.
   B. PREVENTION OF TRACKING OF MUD, DIRT, AND CONSTRUCTION MATERIALS ONTO THE PUBLIC ROAD RIGHT-OF-WAY.
   C. PREVENTION OF DISCHARGE OF WATER RUN-OFF DURING DRY AND WET WEATHER CONDITIONS ONTO THE PUBLIC ROAD RIGHT-OF-WAY.
18. THE OWNER, CONTRACTOR, AND ANY PERSON PERFORMING CONSTRUCTION ACTIVITIES SHALL ENSURE THAT ALL TEMPORARY CONSTRUCTION FACILITIES, INCLUDING BUT NOT LIMITED TO CONSTRUCTION MATERIALS, DELIVERIES, HAZARDOUS AND NON-HAZARDOUS MATERIAL STORAGE, EQUIPMENT, TOOLS, PORTABLE TOILETS, CONCRETE WASHOUT, GARBAGE CONTAINERS, LAYDOWN YARDS, SECONDARY CONTAINMENT AREAS, ETC. ARE LOCATED OUTSIDE THE SANTA CLARA COUNTY ROAD RIGHT-OF-WAY.
19. EROSION CONTROL PLAN IS A GUIDE AND SHALL BE AMENDED AS NECESSARY TO PREVENT EROSION AND ILLICIT DISCHARGES ON A YEAR AROUND BASIS, DEPENDING ON THE SEASON, WEATHER, AND FIELD CONDITIONS. EROSION CONTROL MEASURES IN ADDITION TO THOSE NOTED IN THE PERMITTED PLANS MAY BE NECESSARY. FAILURE TO INSTALL SITE SITE AND SITUATIONALLY APPROPRIATE EROSION CONTROL MEASURES MAY RESULT IN VIOLATIONS, FINES, AND A STOPPAGE OF WORK.

STORM DRAINAGE AND STORMWATER MANAGEMENT

1. DEVELOPER IS RESPONSIBLE FOR ALL NECESSARY DRAINAGE FACILITIES WHETHER SHOWN ON THE PLANS OR NOT AND HE OR HIS SUCCESSOR PROPERTY OWNERS ARE RESPONSIBLE FOR THE ADEQUACY AND CONTINUED MAINTENANCE OF THESE FACILITIES IN A MANNER WHICH WILL PRECLUDE ANY HAZARD TO LIFE, HEALTH, OR DAMAGE TO ADJOINING PROPERTY, CONSISTENT WITH NPDES PERMIT CAS612008 / ORDER NO. R2-2009-0047 AND NPDES PERMIT CAS000004/ ORDER NO. 2013-0001-DWQ.
2. DROP INLETS SHALL BE COUNTY STANDARD TYPE 5 UNLESS OTHERWISE NOTED ON THE PLANS. THE DEVELOPER'S ENGINEER SHALL BE RESPONSIBLE FOR THE PROPER LOCATION OF DROP INLETS. WHERE STREET PROFILE GRADE EXCEEDS 6% DROP INLETS SHALL BE SET AT 500 ANGLE CURB LINE TO ACCEPT WATER OR AS SHOWN ON THE PLANS.
3. WHERE CULVERTS ARE INSTALLED THE DEVELOPER SHALL BE RESPONSIBLE FOR GRADING THE OUTLET DITCH TO DRAIN TO AN EXISTING SWALE OR TO AN OPEN AREA FOR SHEET FLOW.
4. UPON INSTALLATION OF DRIVEWAY CONNECTIONS, PROPERTY OWNERS SHALL PROVIDE FOR THE UNINTERRUPTED FLOW OF WATER IN ROADSIDE DITCHES.
5. THE COUNTY SHALL INSPECT UNDERGROUND DRAINAGE IMPROVEMENTS AND STORMWATER MANAGEMENT FEATURES PRIOR TO BACKFILL.

AS-BUILT PLANS STATEMENT

THIS IS A TRUE COPY OF THE AS-BUILT PLANS. THERE (____ WERE) (____ WERE NOT) MINOR FIELD CHANGES - MARKED WITH THE SYMBOL (˚). THERE (____WERE) (____ WERE NOT) PLAN REVISIONS INDICATING SIGNIFICANT CHANGES REVIEWED BY THE COUNTY ENGINEER AND MARKED WITH THE SYMBOL △.

DATE_____ SIGNATURE _____

NOTE: THIS STATEMENT IS TO BE SIGNED BY THE PERSON AUTHORIZED BY THE COUNTY ENGINEER TO PERFORM THE INSPECTION WORK. A REPRODUCIBLE COPYOF THE AS-BUILT PLANS MUST BE FURNISHED TO THE COUNTY ENGINEER AFTERCONSTRUCTION.

GEOTECHNICAL ENGINEER OBSERVATION

1. A CONSTRUCTION OBSERVATION LETTER FROM THE RESPONSIBLE GEOTECHNICAL ENGINEER AND ENGINEERING GEOLOGIST DETAILING CONSTRUCTION OBSERVATIONS AND CERTIFYING THAT THE WORK WAS DONE IN ACCORDANCE WITH THE RECOMMENDATIONS IN THE GEOTECHNICAL AND GEOLOGIC REPORTS SHALL BE SUBMITTED PRIOR TO THE GRADING COMPLETION AND RELEASE OF THE BOND.

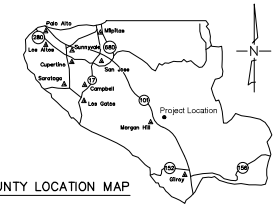

COUNTY LOCATION MAP

SURVEY MONUMENT PRESERVATION

1. THE LANDOWNER/CONTRACTOR MUST PROTECT AND ENSURE THE PERPETUATION OF SURVEY MONUMENTS AFFECTED BY CONSTRUCTION ACTIVITIES.
2. PRIOR TO THE START OF CONSTRUCTION, THE CONTRACTOR SHALL LOCATE, STAKE, AND FLAG ALL PERMANENT SURVEY MONUMENTS OF RECORD AND ANY UNRECORDED MONUMENTS THAT ARE DISCOVERED THAT ARE WITHIN 50 FEET OF THE CONSTRUCTION ACTIVITY.
3. THE LANDOWNER, CONTRACTOR AND/OR ANY PERSON PERFORMING CONSTRUCTION ACTIVITIES THAT WILL OR MAY DISTURB AN EXISTING MONUMENT, CORNER STAKE, OR ANY OTHER PERMANENT SURVEYED MONUMENT SHALL CAUSE TO HAVE A LICENSED LAND SURVEYOR OR CIVIL ENGINEER, AUTHORIZED TO PRACTICE SURVEYING, ENSURE THAT A CORNER RECORD AND/OR RECORD OF SURVEY ARE FILED WITH THE COUNTY SURVEYOR'S OFFICE PRIOR TO DISTURBING SAID MONUMENTS AND RESET PERMANENT MONUMENT(S) TO PERPETUATE THE LOCATION IF ANY PERMANENT MONUMENT COULD BE DESTROYED, DAMAGED, COVERED, DISTURBED, OR OTHERWISE OBLITERATED. THE LICENSED LAND SURVEYOR OR CIVIL ENGINEER SHALL FILE A CORNER RECORD OR RECORD OF SURVEY WITH COUNTY SURVEYOR PRIOR TO FINAL ACCEPTANCE OF THE PROJECT BY THE LAND DEVELOPMENT ENGINEERING INSPECTOR.

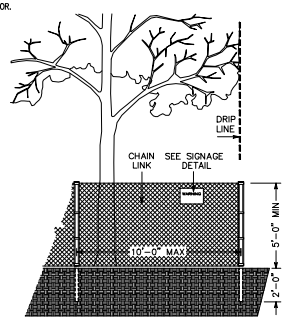

EXISTING TREE PROTECTION DETAILS

1. PRIOR TO THE COMMENCEMENT OF ANY GRADING, TREE PROTECTIVE FENCING SHALL BE IN PLACE IN ACCORDANCE WITH THE TREE PRESERVATION PLAN AND INSPECTED BY A CERTIFIED ARBORIST. THE ARBORIST SHALL MONITOR CONSTRUCTION ACTIVITY TO ENSURE THAT THE TREE PROTECTION MEASURES ARE IMPLEMENTED AND ADHERED TO DURING CONSTRUCTION. THIS CONDITION SHALL BE INCORPORATED INTO THE GRADING PLANS.
2. FENCE SHALL BE MINIMUM 5 FEET TALL CONSTRUCTED OF STURDY MATERIAL (CHAIN-LINK OR EQUIVALENT STRENGTH / DURABILITY).
3. FENCE SHALL BE SUPPORTED BY VERTICAL POSTS DRIVEN 2 FEET (MIN) INTO THE GROUND AND SPACED NOT MORE THAN

THE USE OF THESE PLANS AND SPECIFICATIONS SHALL BE RESTRICTED TO THE ORIGINAL SITE FOR WHICH THEY WERE PREPARED AND PUBLICATION THEREOF IS EXPRESSLY LIMITED TO SUCH USE. REPRODUCTION OR PUBLICATION BY ANY METHOD, IN WHOLE OR PART, IS PROHIBITED. TITLE TO THE PLANS AND SPECIFICATIONS REMAINS IN THE ENGINEER WITHOUT PREJUDICE. VISUAL CONTACT WITH THESE PLANS AND SPECIFICATIONS SHALL CONSTITUTE PRIMA FACIE EVIDENCE OF THE ACCEPTANCE OF THESE RESTRICTIONS.

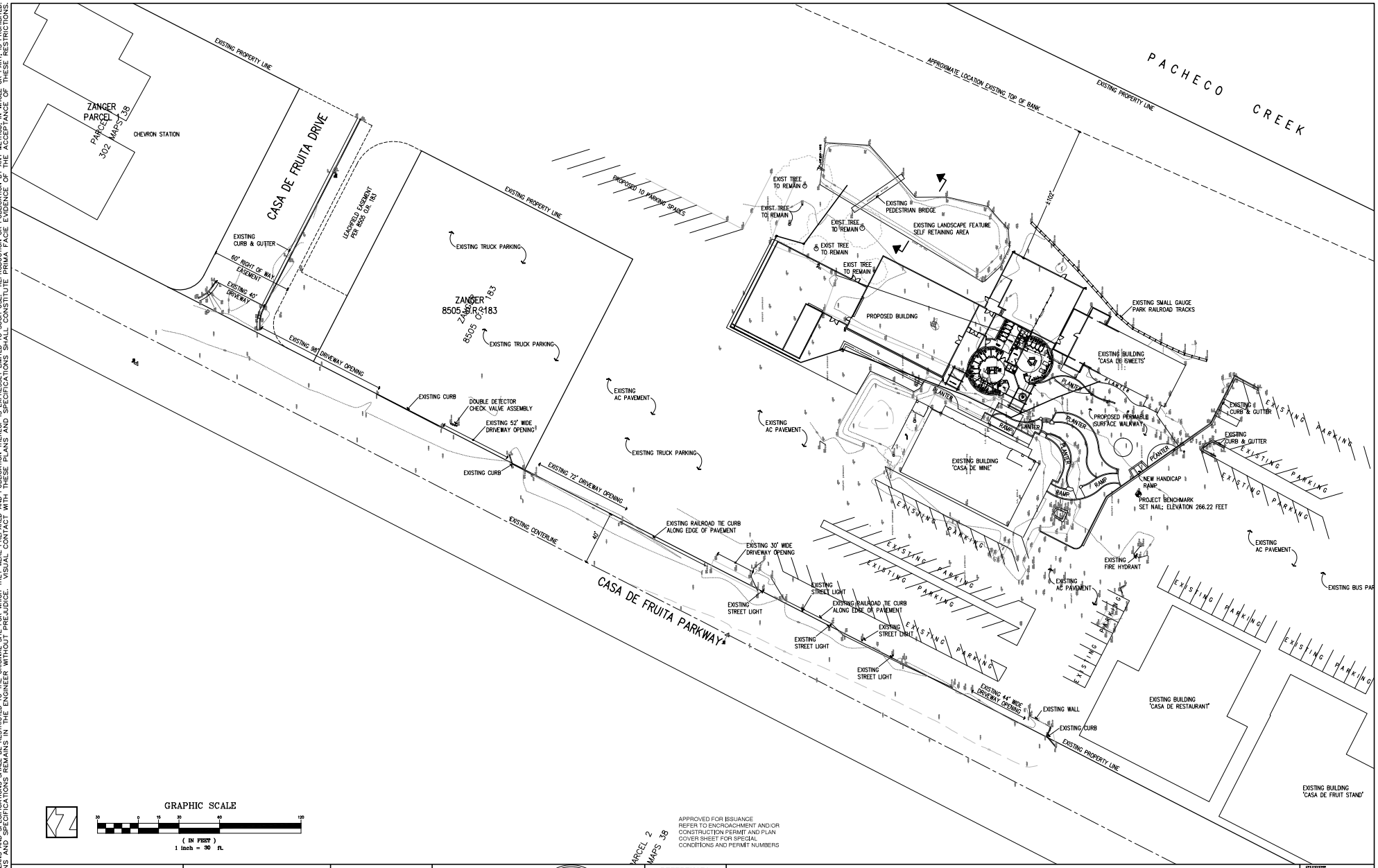

APPROVED FOR ISSUANCE
REFER TO ENCROACHMENT AND/OR CONSTRUCTION PERMIT AND PLAN COVER SHEET FOR SPECIAL CONDITIONS AND PERMIT NUMBERS

REVISIONS:		
DATE	DESCRIPTION	BY:

HANNA-BRUNETTI
EST. 1914
CIVIL ENGINEERS • LAND SURVEYORS
CONSTRUCTION MANAGERS

DATE: JULY 2019
HORIZ. SCALE: 1"=30'
VERT. SCALE: NONE
DESIGNED BY: AM
CHECKED BY:
DRAWN BY: TM

date: _____ 19
Hanna – Brunetti

Amanda Joy Musy-Verdel
R.C.E. # 69278
expires: 6/30/20

REGISTERED PROFESSIONAL ENGINEER
AMANDA JOY MUSY-VERDEL
NO. 69278
EXP. 6-30-20
CIVIL
STATE OF CALIFORNIA

REFERENCES

Preliminary Site Plan

Lands of Zanger - 10031 Pacheco Pass Highway - apn 898-22-023

UNINCORPORATED
JULY 2019

SANTA CLARA COUNTY
CALIFORNIA

SHEET 2 OF 10

JOB NO. 14076

PLAN # _____
SHEET _____ OF _____

APPLICANT: ZANGER ROAD: 10031 PACHECO PASS HIGHWAY COUNTY FILE NO.: 547-98-16-14A JOB NO. 14076

THE USE OF THESE PLANS AND SPECIFICATIONS SHALL BE RESTRICTED TO THE ORIGINAL SITE FOR WHICH THEY WERE PREPARED AND PUBLICATION THEREOF IS EXPRESSLY LIMITED TO SUCH USE. REPRODUCTION OR PUBLICATION BY ANY METHOD, IN WHOLE OR PART, IS PROHIBITED. TITLE TO THESE PLANS AND SPECIFICATIONS REMAINS IN THE ENGINEER WITHOUT PREJUDICE. VISUAL CONTACT WITH THESE PLANS AND SPECIFICATIONS SHALL CONSTITUTE PRIMA FACIE EVIDENCE OF THE ACCEPTANCE OF THESE RESTRICTIONS.

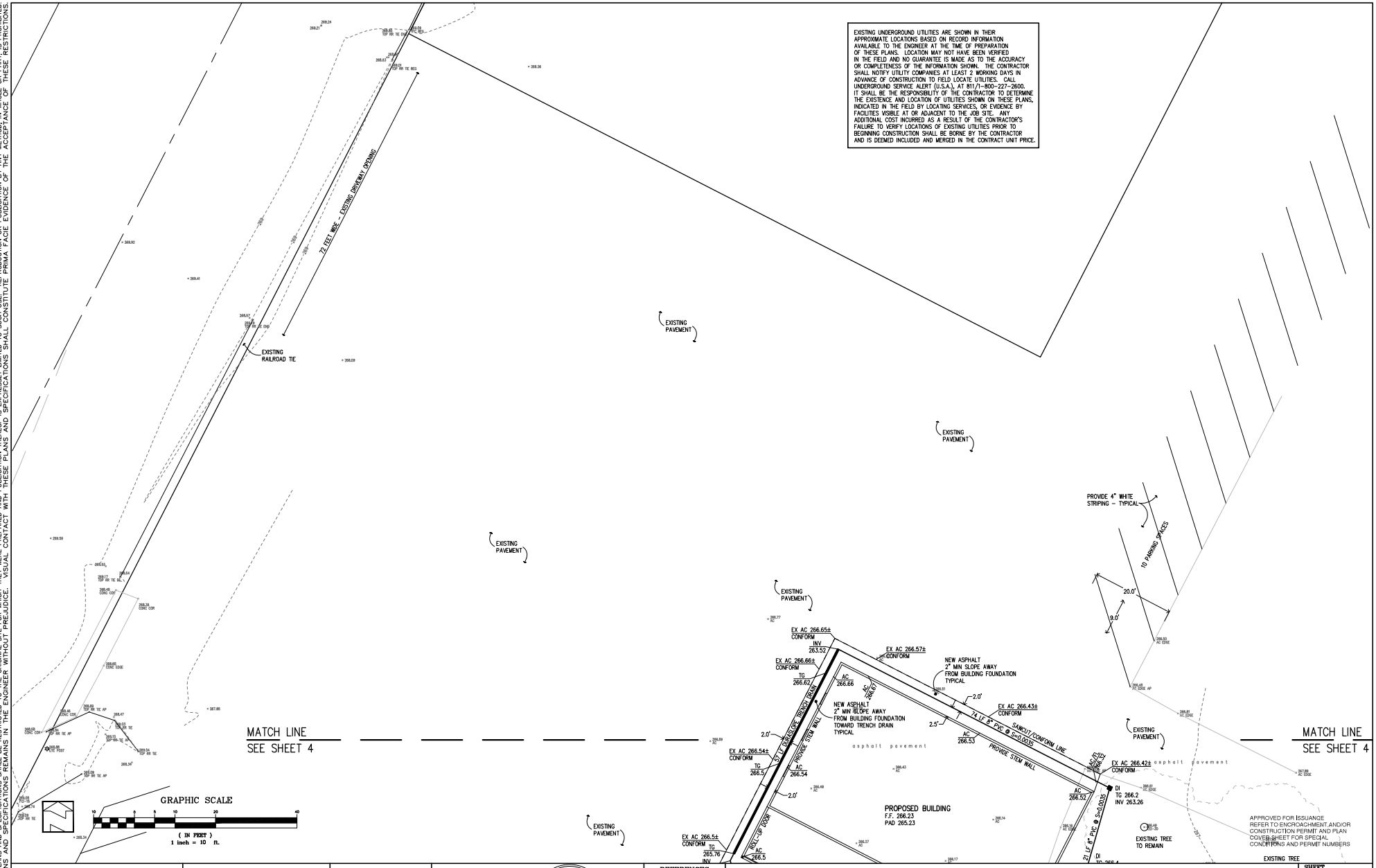

PLAN # ____
SHEET ____ OF ____

REVISIONS:		
DATE	DESCRIPTION	BY:

HANNA-BRUNETTI
EST. 1984
CIVIL ENGINEERS • LAND SURVEYORS
CONSTRUCTION MANAGERS

DATE: JULY 2019
HORIZ. SCALE: 1"=10'
VERT. SCALE: NONE
DESIGNED BY: AM
CHECKED BY: ____
DRAWN BY: T.M.

date: ____ 19
Hanna – Brunetti

Amanda Joy Musy-Verdel
R.C.E. # 69278
expires: 6/30/20

REGISTERED PROFESSIONAL ENGINEER
AMANDA JOY MUSY-VERDEL
NO. 69278
EXP. 6-30-20
CIVIL
STATE OF CALIFORNIA

REFERENCES

Preliminary Grading & Drainage Plan

Lands of Zanger - 10031 Pacheco Pass Highway - apn 898-22-023

UNINCORPORATED
JULY 2019

SANTA CLARA COUNTY
CALIFORNIA

SHEET 3 OF 10

JOB NO. 14076

THE USE OF THESE PLANS AND SPECIFICATIONS SHALL BE RESTRICTED TO THE ORIGINAL SITE FOR WHICH THEY WERE PREPARED AND PUBLICATION THEREOF IS EXPRESSLY LIMITED TO SUCH USE. REPRODUCTION OR PUBLICATION BY ANY METHOD, IN WHOLE OR PART, IS PROHIBITED. TITLE TO THESE PLANS AND SPECIFICATIONS REMAINS IN THE ENGINEER WITHOUT PREJUDICE. VISUAL CONTACT WITH THESE PLANS AND SPECIFICATIONS SHALL CONSTITUTE PRIMA FACIE EVIDENCE OF THE ACCEPTANCE OF THESE RESTRICTIONS.

EXISTING UNDERGROUND UTILITIES ARE SHOWN IN THEIR APPROXIMATE LOCATIONS BASED ON RECORD INFORMATION AVAILABLE TO THE ENGINEER AT THE TIME OF PREPARATION OF THESE PLANS. LOCATION MAY NOT HAVE BEEN VERIFIED IN THE FIELD AND NO GUARANTEE IS MADE AS TO THE ACCURACY OR COMPLETENESS OF THE INFORMATION SHOWN. THE CONTRACTOR SHALL NOTIFY UTILITY COMPANIES AT LEAST 2 WORKING DAYS IN ADVANCE OF CONSTRUCTION TO FIELD LOCATE UTILITIES. CALL UNDERGROUND SERVICE ALERT (U.S.A.), AT 811/1-800-227-2600. IT SHALL BE THE RESPONSIBILITY OF THE CONTRACTOR TO DETERMINE THE EXISTENCE AND LOCATION OF UTILITIES SHOWN ON THESE PLANS, INDICATED IN THE FIELD BY LOCATING SERVICES, OR EVIDENCE BY FACILITIES VISIBLE AT OR ADJACENT TO THE JOB SITE. ANY ADDITIONAL COST INCURRED AS A RESULT OF THE CONTRACTOR'S FAILURE TO VERIFY LOCATIONS OF EXISTING UTILITIES PRIOR TO BEGINNING CONSTRUCTION SHALL BE BORNE BY THE CONTRACTOR AND IS DEEMED INCLUDED AND MERGED IN THE CONTRACT UNIT PRICE.

CONSTRUCTION NOTES

1. EXISTING SEPTIC TANKS TO BE REMOVED. EXISTING SEWER PIPES TO BE RECONNECTED TO NEW SEPTIC TANKS
2. LANDSCAPE WALL; SEE LANDSCAPE PLANS FOR DIMENSIONS AND DETAILS; TYPICAL
3. EXISTING UTILITY BOX TO BE RELOCATED
4. EXISTING UTILITY BOX TO BE READJUSTED TO NEW FINISH GRADE

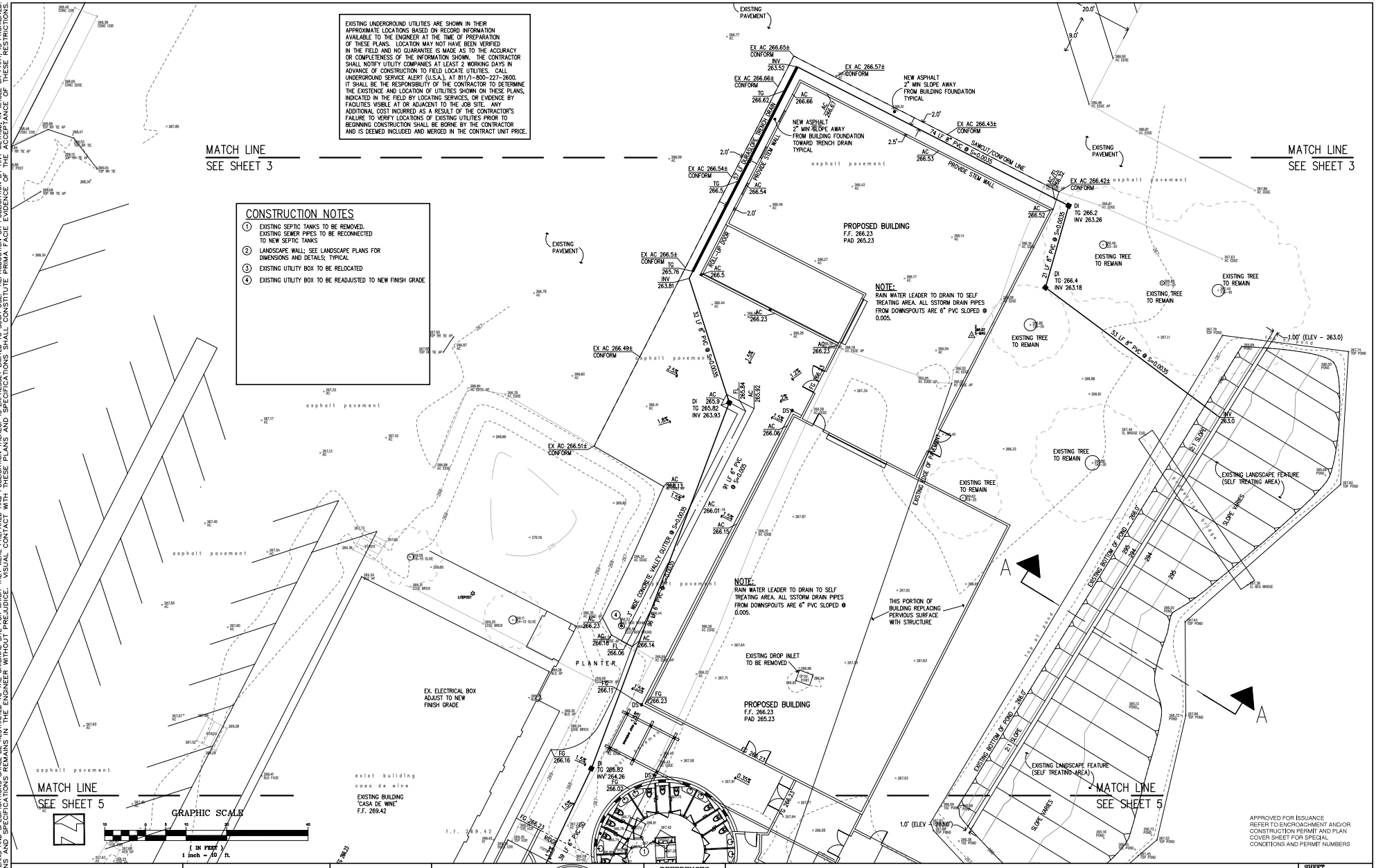

APPROVED FOR ISSUANCE
REFER TO ENCROACHMENT AND/OR CONSTRUCTION PERMIT AND PLAN COVER SHEET FOR SPECIAL CONDITIONS AND PERMIT NUMBERS

PLAN # ____
SHEET ____ OF ____

REVISIONS:		
DATE	DESCRIPTION	BY:

HANNA-BRUNETTI
EST. 1989
CIVIL ENGINEERS • LAND SURVEYORS
CONSTRUCTION MANAGERS

DATE: JULY 2019
HORIZ. SCALE: 1"=40'
VERT. SCALE: NONE
DESIGNED BY: AM
CHECKED BY: ____
DRAWN BY: TM

date: ____ 19
Hanna – Brunetti

Amanda Joy Musy-Verdel
R.C.E. # 69278
expires: 6/30/20

REGISTERED PROFESSIONAL ENGINEER
AMANDA JOY MUSY-VERDEL
NO. 69278
EXP. 6-30-20
CIVIL
STATE OF CALIFORNIA

REFERENCES

Preliminary Grading & Drainage Plan

Lands of Zanger - 10031 Pacheco Pass Highway - apn 898-22-023

UNINCORPORATED
JULY 2019

SANTA CLARA COUNTY
CALIFORNIA

SHEET 4 OF 10

JOB NO. 14076

THE USE OF THESE PLANS AND SPECIFICATIONS SHALL BE RESTRICTED TO THE ORIGINAL SITE FOR WHICH THEY WERE PREPARED AND PUBLICATION THEREOF IS EXPRESSLY LIMITED TO SUCH USE. REPRODUCTION OR PUBLICATION BY ANY METHOD, IN WHOLE OR PART, IS PROHIBITED. TITLE TO THESE PLANS AND SPECIFICATIONS REMAINS IN THE ENGINEER WITHOUT PREJUDICE. VISUAL CONTACT WITH THESE PLANS AND SPECIFICATIONS SHALL CONSTITUTE PRIMA FACIE EVIDENCE OF THE ACCEPTANCE OF THESE RESTRICTIONS.

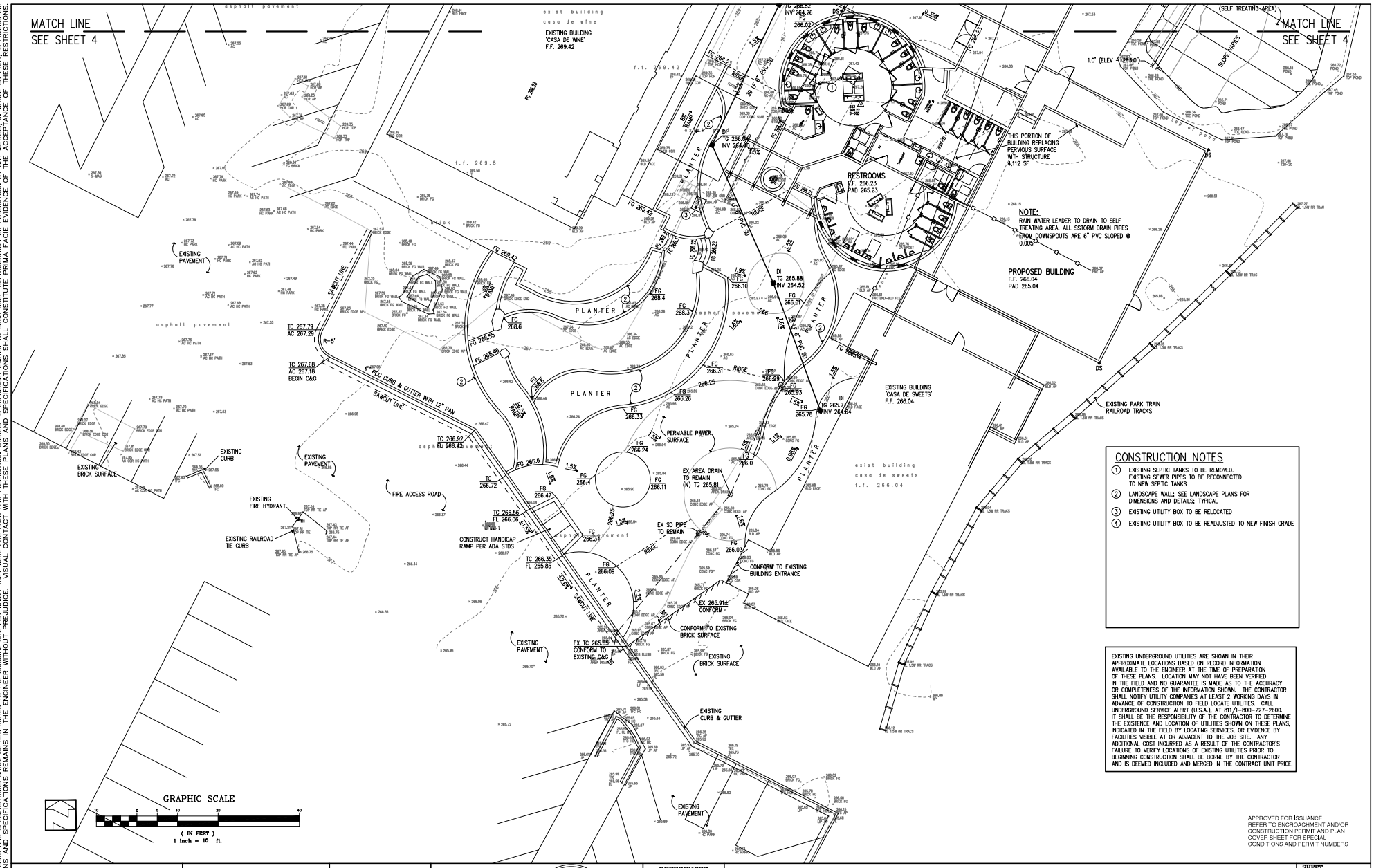

CONSTRUCTION NOTES

1. EXISTING SEPTIC TANKS TO BE REMOVED. EXISTING SEWER PIPES TO BE RECONNECTED TO NEW SEPTIC TANKS
2. LANDSCAPE WALL; SEE LANDSCAPE PLANS FOR DIMENSIONS AND DETAILS; TYPICAL
3. EXISTING UTILITY BOX TO BE RELOCATED
4. EXISTING UTILITY BOX TO BE READJUSTED TO NEW FINISH GRADE

EXISTING UNDERGROUND UTILITIES ARE SHOWN IN THEIR APPROXIMATE LOCATIONS BASED ON RECORD INFORMATION AVAILABLE TO THE ENGINEER AT THE TIME OF PREPARATION OF THESE PLANS. LOCATION MAY NOT HAVE BEEN VERIFIED IN THE FIELD AND NO GUARANTEE IS MADE AS TO THE ACCURACY OR COMPLETENESS OF THE INFORMATION SHOWN. THE CONTRACTOR SHALL NOTIFY UTILITY COMPANIES AT LEAST 2 WORKING DAYS IN ADVANCE OF CONSTRUCTION TO FIELD LOCATE UTILITIES. CALL UNDERGROUND SERVICE ALERT (U.S.A.), AT 811/-800-227-2600. IT SHALL BE THE RESPONSIBILITY OF THE CONTRACTOR TO DETERMINE THE EXISTENCE AND LOCATION OF UTILITIES SHOWN ON THESE PLANS, INDICATED IN THE FIELD BY LOCATING SERVICES, OR EVIDENCE BY FACILITIES VISIBLE AT OR ADJACENT TO THE JOB SITE. ANY ADDITIONAL COST INCURRED AS A RESULT OF THE CONTRACTOR'S FAILURE TO VERIFY LOCATIONS OF EXISTING UTILITIES PRIOR TO BEGINNING CONSTRUCTION SHALL BE BORNE BY THE CONTRACTOR AND IS DEEMED INCLUDED AND MERGED IN THE CONTRACT UNIT PRICE.

APPROVED FOR ISSUANCE
REFER TO ENCROACHMENT AND/OR CONSTRUCTION PERMIT AND PLAN COVER SHEET FOR SPECIAL CONDITIONS AND PERMIT NUMBERS

PLAN # ____
SHEET ____ OF ____

REVISIONS:		
DATE	DESCRIPTION	BY:

HANNA-BRUNETTI
EST. 1991
CIVIL ENGINEERS • LAND SURVEYORS
CONSTRUCTION MANAGERS

DATE: JULY 2019
HORIZ. SCALE: 1"=10'
VERT. SCALE: NONE
DESIGNED BY: AM
CHECKED BY: ____
DRAWN BY: TM

date: ____ 19
Hanna – Brunetti
Amanda Joy Musy-Verdel
R.C.E. # 69278
expires: 6/30/20

REGISTERED PROFESSIONAL ENGINEER
AMANDA JOY MUSY-VERDEL
NO. 69278
EXP. 6-30-20
CIVIL
STATE OF CALIFORNIA

REFERENCES

Preliminary Grading & Drainage Plan

Lands of Zanger - 10031 Pacheco Pass Highway - apn 898-22-023

UNINCORPORATED
JULY 2019

SANTA CLARA COUNTY
CALIFORNIA

SHEET 5 OF 10

JOB NO. 14076

THE USE OF THESE PLANS AND SPECIFICATIONS SHALL BE RESTRICTED TO THE ORIGINAL SITE FOR WHICH THEY WERE PREPARED AND PUBLICATION THEREOF IS EXPRESSLY LIMITED TO SUCH USE. REPRODUCTION OR PUBLICATION BY ANY METHOD, IN WHOLE OR PART, IS PROHIBITED. USE TO OTHERS OF THESE PLANS AND SPECIFICATIONS REMAINS IN THE ENGINEER WITHOUT PREJUDICE. VISUAL CONTACT WITH THESE PLANS AND SPECIFICATIONS SHALL CONSTITUTE PRIMA FACIE EVIDENCE OF THE ACCEPTANCE OF THESE RESTRICTIONS.

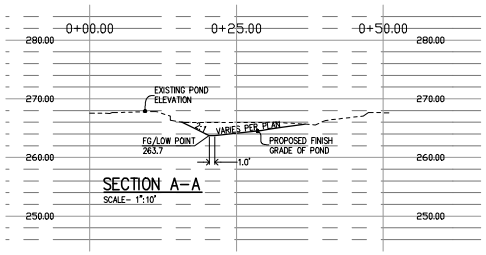

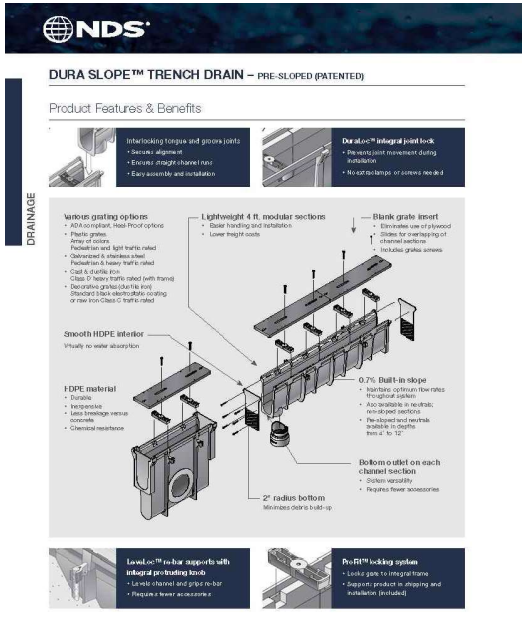

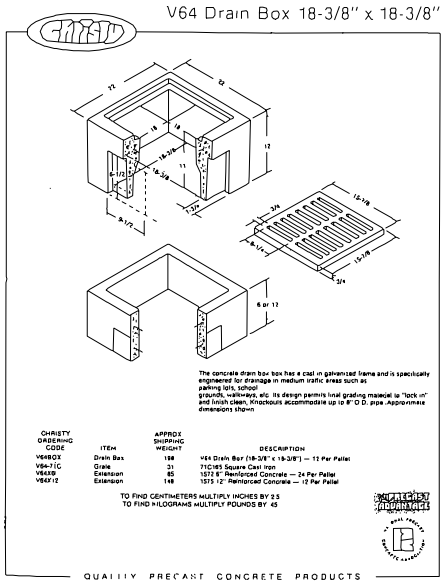

LEGEND

EXISTING / PROPOSED

- CONTOUR ELEVATION
- WATER MAIN
- STORM DRAIN
- SANITARY SEWER
- ELECTROLIER
- FLOW DIRECTION
- DROP INLET
- MANHOLE
- CURB INLET
- WATER METER SERVICE
- FIRE HYDRANT
- WATER VALVE
- SIDEWALK
- VERTICAL CURB
- CURB & GUTTER
- JOINT TRENCH
- RETAINING WALL
- DRAINAGE SWALE
- SEWER LATERAL
- TREE TO BE REMOVED
- MONUMENT
- ROCK RIP-RAP

ABBREVIATIONS

AC	ASPHALT CONCRETE	FH	FIRE HYDRANT	RWL	RAINWATER LEADER
AB	AGGREGATE BASE	FL	FLOWLINE	S	SLOPE
AD	AREA DRAIN	FOC	FACE OF CURB	SD	STORM DRAIN PIPE
AGG	AGGREGATE	G	GAS LINE	SS	SANITARY SEWER PIPE
BC	BEGINNING OF CURVE	GM	GAS METER	STM	STORM DRAIN MANHOLE
BLDG	BUILDING	GB	GRADE BREAK	SS MH	SANITARY SEWER MANHOLE
BOC	BACK OF CURB	GUY	GUY WIRE FOR POLE	SP	SERVICE POLE
BO	BLOW OFF	GV	GATE VALVE	STD	STANDARD
BWF	BARBWIRE FENCE	HDPE	HIGH DENSITY POLYETHYLENE	SQ	SQUARE
CATV	CABLE TELEVISION	HP	HIGH POINT	SW	SIDEWALK
CB	CATCH BASIN	INV	INVERT OF PIPE	T	TELEPHONE LINE
C&G	CURB & GUTTER	IP	IRON PIPE	TBM	TEMPORARY BENCHMARK
CI	CURB INLET	JP	JOINT POLE	TC	TOP OF CURB
CL	CENTERLINE	JT	JOINT TRENCH	TG	TOP OF GRATE
CMP	CORRUGATED METAL PIPE	LF	LINEAR FEET	TOB	TOP OF BANK
CMU	CONCRETE MASONRY UNIT	LP	LOW POINT	TOE	TOE OF BANK
CO	CLEAN OUT	MAX	MAXIMUM	TW	TOP OF WALL
CONC	CONCRETE	MIN	MINIMUM	TYP	TYPICAL
CONST	CONSTRUCTION	N.I.C.	NOT IN CONTRACT	W	WATER LINE
DI	DROP INLET	(N)	NEW	WM	WATER METER
DIP	DUCTILE IRON PIPE	OHU	OVERHEAD UTILITY	WV	WATER VALVE
DWY	DRIVEWAY	PB	PULL BOX		
E	ELECTRIC LINE	PCC	PORTLAND CONCRETE CEMENT		
EC	END OF CURVE	PL	PROPERTY LINE		
EG	EXISTING GRADE	PRC	POINT REVERSE CURVE		
ELEV	ELEVATION	P.S.E.	PUBLIC SERVICE EASEMENT		
EP	EDGE OF PAVEMENT	P.S.D.E.	PRIVATE STORM DRAIN EASEMENT		
ER	END OF RETURN	P.U.E.	PUBLIC UTILITY EASEMENT		
ESMT	EASEMENT	PVI	POINT OF VERTICAL INTERSECTION		
(E)	EXISTING	PVC	POLYVINYL CHLORIDE PIPE		
EX.	EXISTING	R	RADIUS		
FF	FINISH FLOOR	RCP	REINFORCED CONCRETE PIPE		
FG	FINISH GRADE	R/W	RIGHT OF WAY		

APPROVED FOR ISSUANCE
REFER TO ENCROACHMENT AND/OR CONSTRUCTION PERMIT AND PLAN COVER SHEET FOR SPECIAL CONDITIONS AND PERMIT NUMBERS

PLAN # ____
SHEET ____ OF ____

REVISIONS:

DATE	DESCRIPTION	BY:

HANNA-BRUNETTI EST. 1955
CIVIL ENGINEERS • LAND SURVEYORS
CONSTRUCTION MANAGERS

DATE: JULY 2019
HORIZ. SCALE: 1"=20'
VERT. SCALE: NONE
DESIGNED BY: AM
CHECKED BY: ____
DRAWN BY: TM

date: ____ 19
Hanna – Brunetti
Amanda Joy Musy–Verdel
R.C.E. # 69278
expires: 6/30/20

REGISTERED PROFESSIONAL ENGINEER
AMANDA JOY MUSY–VERDEL
NO. 69278
EXP. 6–30–20
CIVIL
STATE OF CALIFORNIA

REFERENCES

Details, Abbreviations & Legend

Lands of Zanger - 10031 Pacheco Pass Highway - apn 898-22-023

UNINCORPORATED
JULY 2019

SANTA CLARA COUNTY
CALIFORNIA

SHEET 6 OF 10

JOB NO. 14076

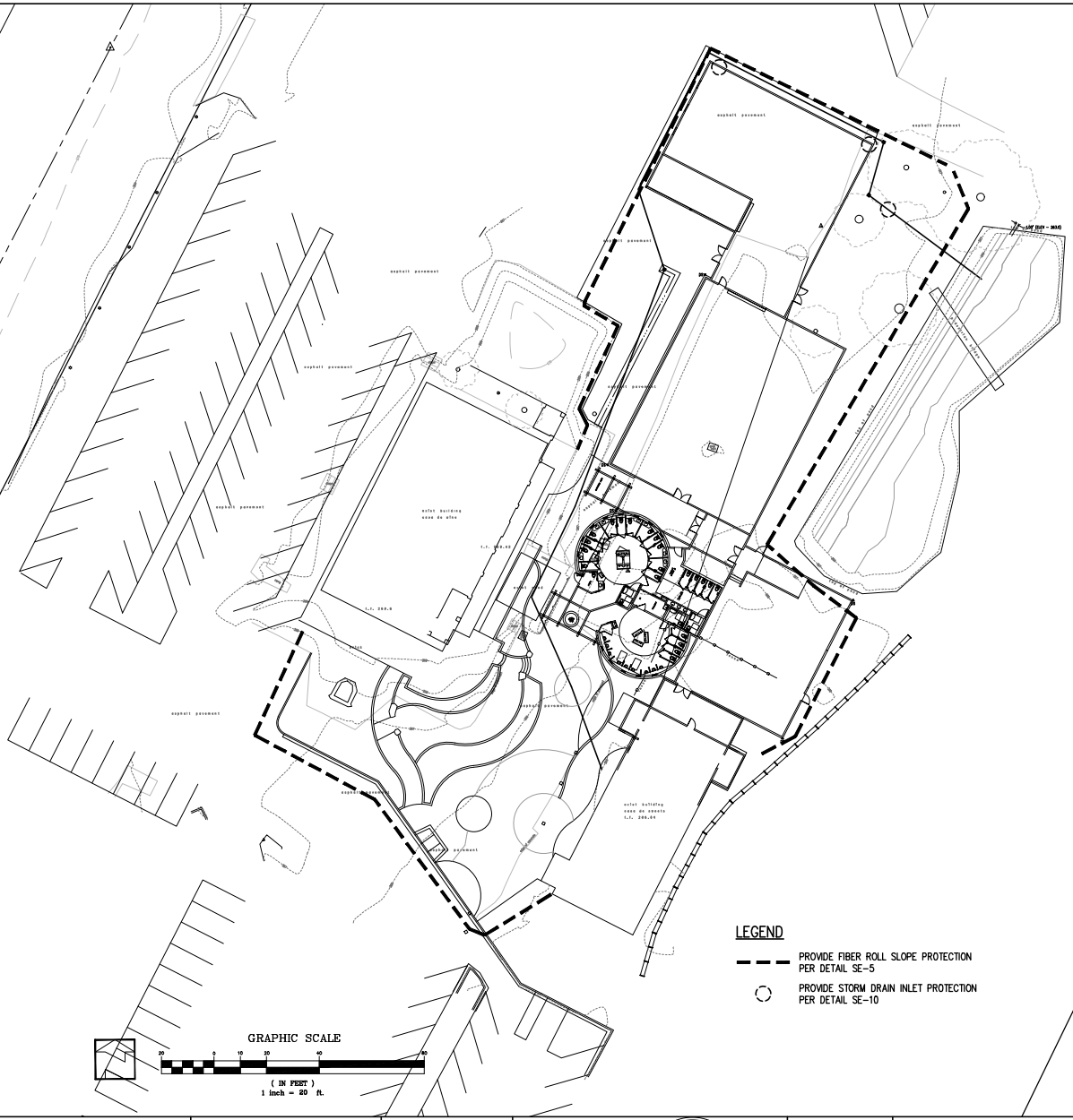
asphalt pavement
asphalt pavement
asphalt pavement
asphalt pavement
asphalt pavement
asphalt pavement
asphalt pavement
asphalt pavement
asphalt pavement
asphalt pavement
asphalt pavement
asphalt building
casa de alba
asphalt building
casa de sweets
t.c. 289.9
t.c. 289.95
t.c. 289.84
t.c. 287.95
t.c. 287.90
t.c. 287.85
t.c. 287.80
t.c. 287.75
t.c. 287.70
t.c. 287.65
t.c. 287.60
t.c. 287.55
t.c. 287.50
t.c. 287.45
t.c. 287.40
t.c. 287.35
t.c. 287.30
t.c. 287.25
t.c. 287.20
t.c. 287.15
t.c. 287.10
t.c. 287.05
t.c. 287.00
t.c.

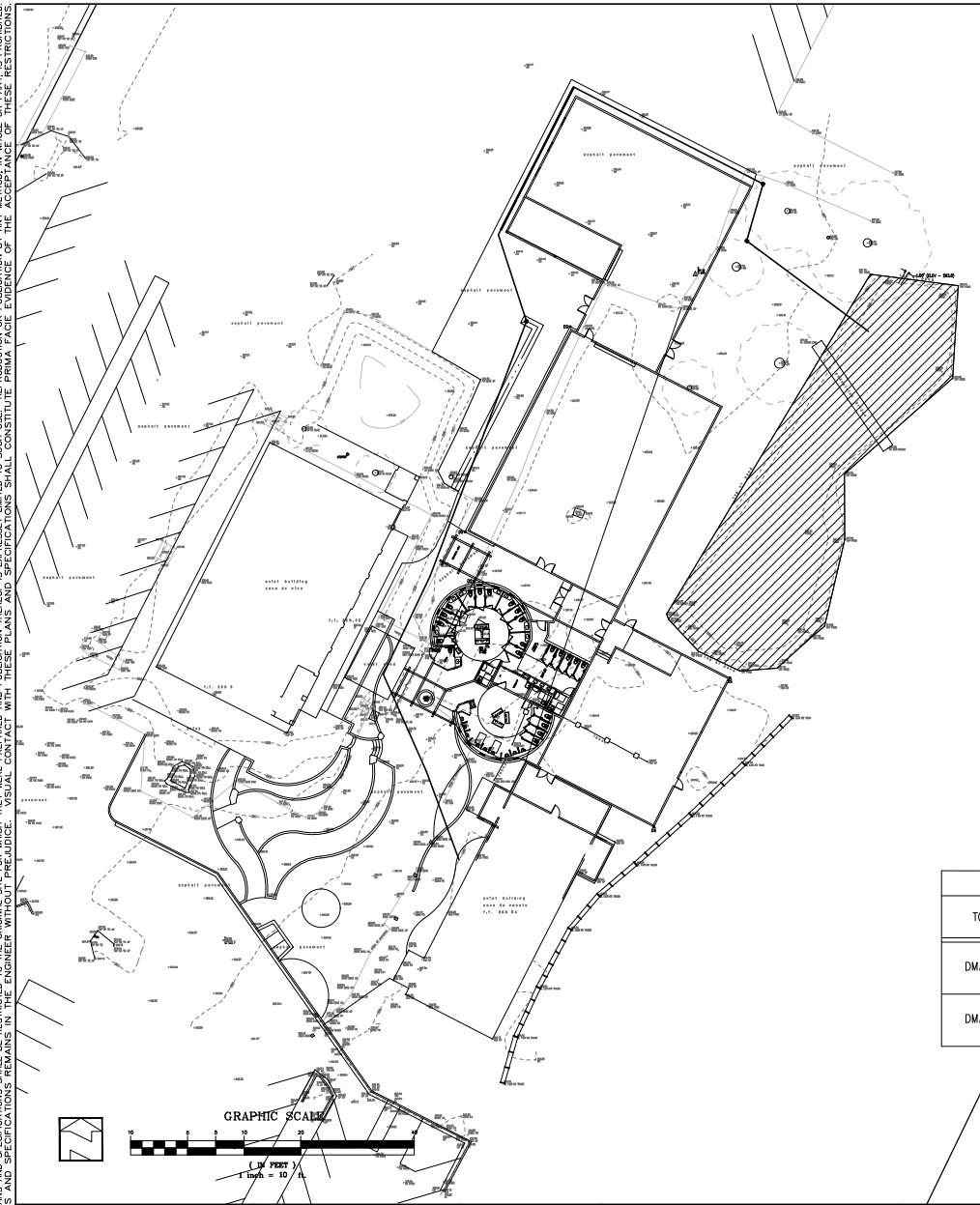

LEGEND

DRAINAGE MANAGEMENT AREA DELINEATION

STORMWATER CONTROL MEASURE

TREATMENT CONTROL MEASURE SUMMARY TABLE									
TCM ID	DESCRIPTION OF AREA	TOTAL AREA (SF)	PERVIOUS AREA (SF)	IMPERVIOUS AREA (SF)	TREATMENT METHOD (SCM)	TIER 3 RETENTION REQ'D (CF)	PEAK FLOW MITIGATION RETENTION REQ'D (CF)	TOTAL RETENTION REQUIRED (CF)	TOTAL RETENTION PROVIDED (CF)
DMA #1	BUILDING & ASPHALT	18,571	0	18,571	POND	172	238	374	3822
DMA #2	LANDSCAPE & PERVIOUS PAVERS	8,663	8,663	0	SELF TREATING AREA	0	0	0	0

APPROVED FOR ISSUANCE
REFER TO ENCROACHMENT AND/OR CONSTRUCTION PERMIT AND PLAN COVER SHEET FOR SPECIAL CONDITIONS AND PERMIT NUMBERS

THE USE OF THESE PLANS AND SPECIFICATIONS SHALL BE RESTRICTED TO THE ORIGINAL SITE FOR WHICH THEY WERE PREPARED AND PUBLICATION THEREOF IS EXPRESSLY LIMITED TO SUCH USE. REPRODUCTION OR PUBLICATION BY ANY METHOD, IN WHOLE OR PART, IS PROHIBITED. TITLE TO THE PLANS AND SPECIFICATIONS REMAINS IN THE ENGINEER WITHOUT PREJUDICE. VISUAL CONTACT WITH THESE PLANS AND SPECIFICATIONS SHALL CONSTITUTE PRIMA FACIE EVIDENCE OF THE ACCEPTANCE OF THESE RESTRICTIONS.

PLAN # ____
SHEET ____ OF ____

REVISIONS:

DATE	DESCRIPTION	BY:

HANNA-BRUNETTI
EST. 1955
CIVIL ENGINEERS • LAND SURVEYORS
CONSTRUCTION MANAGERS

DATE: JULY 2019
HORIZ. SCALE: 1"=10'
VERT. SCALE: NONE
DESIGNED BY: AM
CHECKED BY: ____
DRAWN BY: TM

date: ____ 19
Hanna – Brunetti

Amanda Joy Musy–Verdel
R.C.E. # 69278
expires: 6/30/20

REGISTERED PROFESSIONAL ENGINEER
AMANDA JOY MUSY-VERDEL
NO. 69278
EXP. 6-30-20
CIVIL
STATE OF CALIFORNIA

REFERENCES

Stormwater Control Plan

Lands of Zanger - 10031 Pacheco Pass Highway - apn 898-22-023

UNINCORPORATED
JULY 2019

SANTA CLARA COUNTY
CALIFORNIA

SHEET 8 OF 10

JOB NO. 14076

3 Stabilized Construction Entrance/Exit

CASQA Detail TC-1

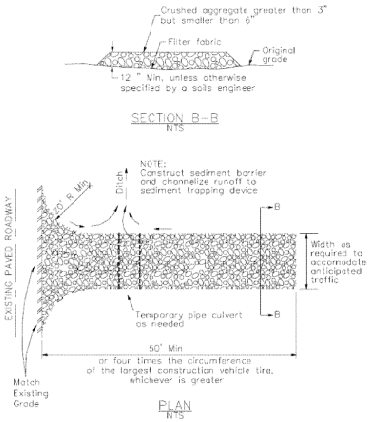

4 Velocity Dissipation Devices

CASQA Detail EC-10

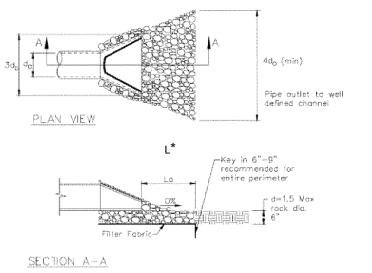

*Length per ABAG Design Standards

1 Silt Fence

CASQA Detail SE-1

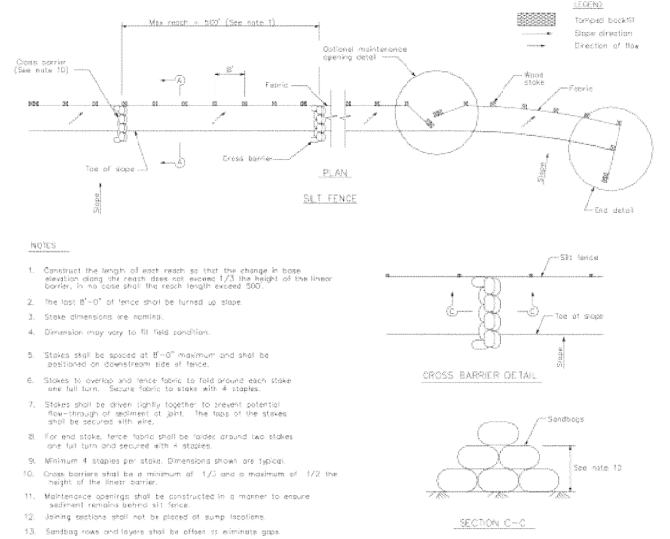

2 Silt Fence

CASQA Detail SE-1

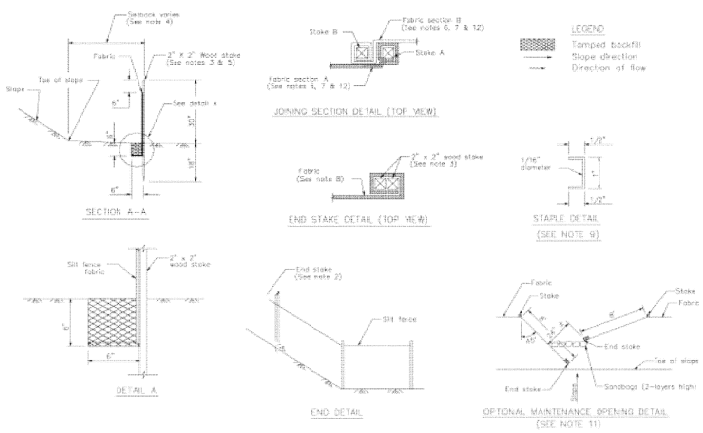

Source for Graphics: California Stormwater BMP Handbook, California Stormwater Quality Association, January 2003.
Available from www.cabmphandbooks.com.

STANDARD BEST MANAGEMENT PRACTICE NOTES

1. Solid and Demolition Waste Management: Provide designated waste collection areas and containers on site away from streets, gutters, storm drains, and waterways, and arrange for regular disposal. Waste containers must be watertight and covered at all times except when waste is deposited. Refer to Erosion & Sediment Control Field Manual, 4th Edition (page C3) or latest.
2. Hazardous Waste Management: Provide proper handling and disposal of hazardous wastes by a licensed hazardous waste material hauler. Hazardous wastes shall be stored and properly labeled in sealed containers constructed of suitable materials. Refer to Erosion & Sediment Control Field Manual, 4th Edition (pages C-5 to C-6) or latest.
3. Spill Prevention and Control: Provide proper storage areas for liquid and solid materials, including chemicals and hazardous substances, away from streets, gutters, storm drains, and waterways. Spill control materials must be kept on site where readily accessible. Spills must be cleaned up immediately and contaminated soil disposed properly. Refer to Erosion & Sediment Control Field Manual, 4th Edition (pages C-7 to C-8, C-13 to C-14) or latest.
4. Vehicle and Construction Equipment Service and Storage: An area shall be designated for the maintenance where on-site maintenance is required, and storage of equipment that is protected from stormwater run-on and runoff. Measures shall be provided to capture any waste oils, lubricants, or other potential pollutants and these wastes shall be properly disposed of off site. Fueling and major maintenance/repair, and washing shall be conducted off-site whenever feasible. Refer to Erosion & Sediment Control Field Manual, 4th Edition (page C9) or latest.
5. Material Delivery, Handling and Storage: In general, materials should not be stockpiled on site. Where temporary stockpiles are necessary and approved by the County, they shall be covered with secured plastic sheeting or tarp and located in designated areas near construction entrances and away from drainage paths and waterways. Barriers shall be provided around storage areas where materials are potentially in contact with runoff. Refer to Erosion & Sediment Control Field Manual, 4th Edition (pages C-11 to C-12) or latest.
6. Handling and Disposal of Concrete and Cement: When concrete trucks and equipment are washed on-site, concrete wastewater shall be contained in designated containers or in a temporary lined and watertight pit where wasted concrete can harden for later removal. If possible have concrete contractor remove concrete wash water from site. In no case shall fresh concrete be washed into the road right-of-way. Refer to Erosion & Sediment Control Field Manual, 4th Edition (pages C-15 to C-16) or latest.
7. Pavement Construction Management: Prevent or reduce the discharge of pollutants from paving operations, using measures to prevent run-on and runoff pollution and properly disposing of wastes. Avoid paving in the wet season and reschedule paving when rain is in the forecast. Residue from saw-cutting shall be vacuumed for proper disposal. Refer to Erosion & Sediment Control Field Manual, 4th Edition (pages C-17 to C-18) or latest.
8. Contaminated Soil and Water Management: Inspections to identify contaminated soils should occur prior to construction and at regular intervals during construction. Remediating contaminated soil should occur promptly after identification and be specific to the contaminant identified, which may include hazardous waste removal. Refer to Erosion & Sediment Control Field Manual, 4th Edition (pages C-19 to C-20) or latest.
9. Sanitary/Septic Water Management: Temporary sanitary facilities should be located away from drainage paths, waterways, and traffic areas. Only licensed sanitary and septic waste haulers should be used. Secondary containment should be provided for all sanitary facilities. Refer to Erosion & Sediment Control Field Manual, 4th Edition (page C-21) or latest.
10. Inspection & Maintenance: Areas of material and equipment storage sites and temporary sanitary facilities must be inspected weekly. Problem areas shall be identified and appropriate additional and/or alternative control measures implemented immediately, within 24 hours of the problem being identified.

STANDARD EROSION CONTROL NOTES

1. Sediment Control Management:

   Tracking Prevention & Clean Up: Activities shall be organized and measures taken as needed to prevent or minimize tracking of soil onto the public street system. A gravel or proprietary device construction entrance/exit is required for all sites. Clean up of tracked material shall be provided by means of a street sweeper prior to an approaching rain event, or at least once at the end of each workday that material is tracked, or, more frequently as determined by the County Inspector. Refer to Erosion & Sediment Control Field Manual, 4th Edition (pages B-31 to B-33) or latest.

   Storm Drain Inlet and Catch Basin Inlet Protection: All inlets within the vicinity of the project and within the project limits shall be protected with gravel bags placed around inlets or other inlet protection. At locations where exposed soils are present, staked fiber rolls or staked silt fences can be used. Inlet filters are not allowed due to clogging and subsequent flooding. Refer to Erosion & Sediment Control Field Manual, 4th Edition (pages B-49 to B-51) or latest.

   Storm Water Runoff: No storm water runoff shall be allowed to drain in to the existing and/or proposed underground storm drain system or other above ground watercourses until appropriate erosion control measures are fully installed.

   Dust Control: The contractor shall provide dust control in graded areas as required by providing wet suppression or chemical stabilization of exposed soils, providing for rapid clean up of sediments deposited on paved roads, furnishing construction road entrances and vehicle wash down areas, and limiting the amount of areas disturbed by clearing and earth moving operations by scheduling these activities in phases.

   Stockpiling: Excavated soils shall not be placed in streets or on paved areas. Borrow and temporary stockpiles shall be protected with appropriate erosion control measures(tarps, straw bales, silt fences, ect.) to ensure silt does not leave the site or enter the storm drain system or neighboring watercourse.
2. Erosion Control: During the rainy season, all disturbed areas must include an effective combination of erosion and sediment control. It is required that temporary erosion control measures are applied to all disturbed soil areas prior to a rain event. During the non-rainy season, erosion control measures must be applied sufficient to control wind erosion at the site.
3. Inspection & Maintenance: Disturbed areas of the Project's site, locations where vehicles enter or exit the site, and all erosion and sediment controls that are identified as part of the Erosion Control Plans must be inspected by the Contractor before, during, and after storm events, and at least weekly during seasonal wet periods. Problem areas shall be identified and appropriate additional and/or alternative control measures implemented immediately, within 24 hours of the problem being identified.
4. Project Completion: Prior to project completion and signoff by the County Inspector, all disturbed areas shall be reseeded, planted, or landscaped to minimize the potential for erosion on the subject site.
5. It shall be the Owner's/Contractor's responsibility to maintain control of the entire construction operation and to keep the entire site in compliance with the erosion control plan.
6. Erosion and sediment control best management practices shall be operable year round or until vegetation is fully established on landscaped surfaces.

Project Information

IMPROVEMENT PLANS
FOR THE
GRADING AND DRAINAGE
ON THE LANDS OF ZANGER
10031 PACHECO PASS HIGHWAY, GILROY
PARCEL 2 AS SHOWN ON PARCEL MAP
RECORDED IN BOOK 22 OF MAPS, PAGE 30 ON JUNE 2, 1972
SANTA CLARA COUNTY, CALIFORNIA
A.P.N.: 898-22-023

Best Management Practices and Erosion Control Details Sheet 1
County of Santa Clara

BMP-1

7 Geotextiles and Mats

CASQA Detail EC-7

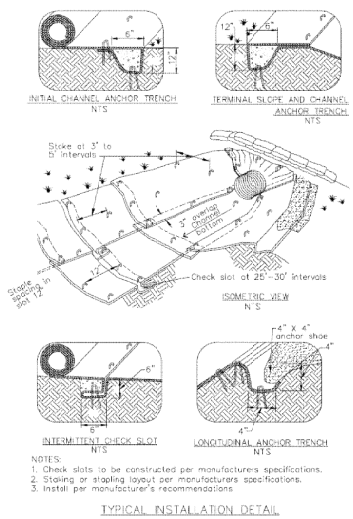

NOTES:
1. Check slots to be constructed per manufacturers specifications.
2. Staking or stapling layout per manufacturers specifications.
3. Install per manufacturer's recommendations

TYPICAL INSTALLATION DETAIL

5 Geotextiles and Mats

CASQA Detail EC-7

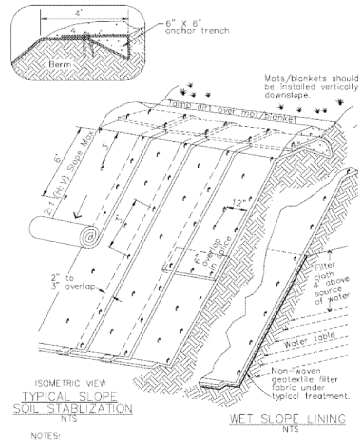

NOTES:
1. Slope surface shall be free of rocks, clods, sticks and grass. Mats/blankets shall have good soil contact
2. Lay blankets loosely and stake or staple to maintain direct contact with the soil. Do not stretch.
3. Install per manufacturer's recommendations

TYPICAL INSTALLATION DETAIL

3 Entrance/Outlet Tire Wash

CASQA Detail TC-3

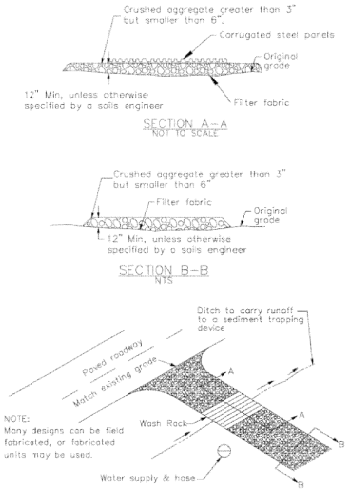

1 Fiber Rolls

CASQA Detail SE-5

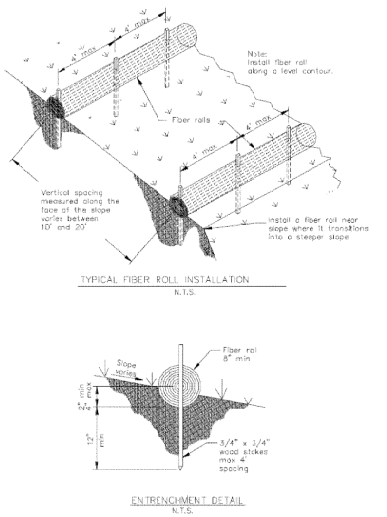

8 Storm Drain Inlet Protection

CASQA Detail SE-10

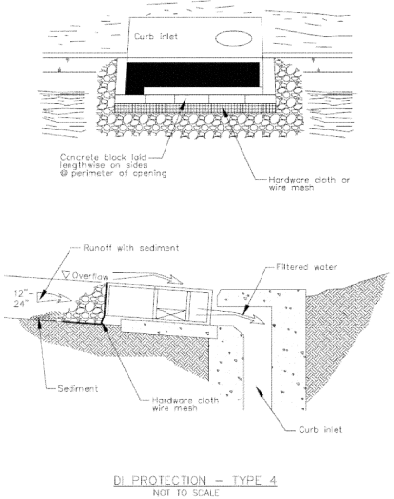

6 Storm Drain Inlet Protection

CASQA Detail SE-10

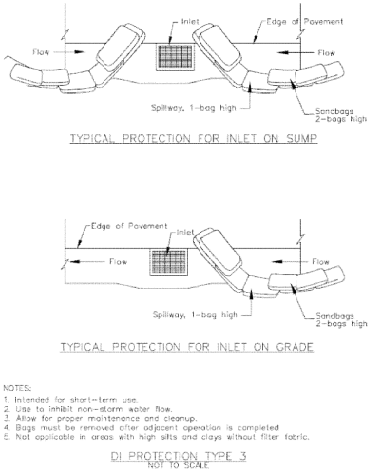

NOTES:
1. Intended for short-term use.
2. Use to inhibit non-storm water flow.
3. Allow for proper maintenance and cleanup.
4. Bags must be removed after adjacent operation is completed
5. Not applicable in areas with high silts and clays without filter fabric.

DI PROTECTION TYPE 3
NOT TO SCALE

4 Storm Drain Inlet Protection

CASQA Detail SE-10

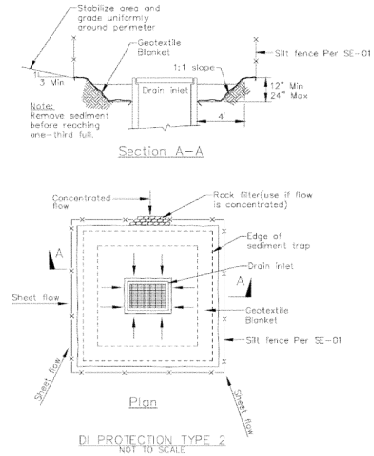

Notes
1. For use in cleared and grubbed and in graded areas.
2. Shape basin so that largest inflow area faces longest length of trap.
3. For concentrated flows, shape basin in 2:1 ratio with length oriented towards direction of flow.

2 Concrete Waste Management

CASQA Detail WM-8

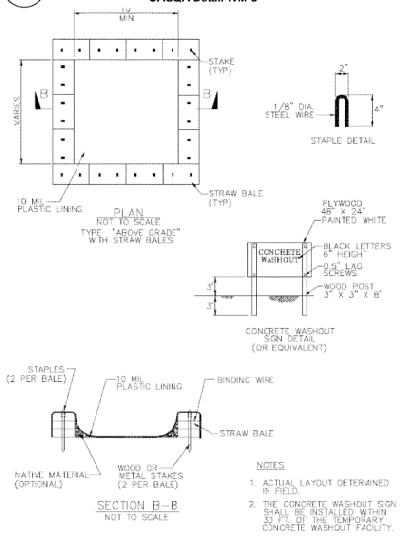

NOTES
1. ACTUAL LAYOUT DETERMINED IN FIELD.
2. THE CONCRETE WASHOUT SIGN SHALL BE INSTALLED WITHIN 30 FT OF THE TEMPORARY CONCRETE WASHOUT FACILITY.

Source for Graphics: California Stormwater BMP Handbook, California Stormwater Quality Association, January 2003.
Available from www.cabmphandbooks.com.

Project Information

IMPROVEMENT PLANS
FOR THE
GRADING AND DRAINAGE
ON THE LANDS OF ZANGER
10031 PACHECO PASS HIGHWAY, GILROY
PARCEL 2 AS SHOWN ON PARCEL MAP
RECORDED IN BOOK 3 OF PARCEL MAPS, PAGE 3, ON JUNE 2, 1972
SANTA CLARA COUNTY, CALIFORNIA
A.P.N.: 898-22-023

Best Management Practices and Erosion Control Details Sheet 2
County of Santa Clara

BMP-2