Notes

ASSESSOR'S PARCEL NO.	898-54-004
PRESENT USE	OPEN SPACE
PROPOSED USE	RESIDENTIAL & OPEN SPACE
PRESENT ZONING	AR-SR-d
PROPOSED ZONING	AR-SR-d
SANITARY SEWER	SEPTIC
GAS and ELECTRIC	PACIFIC GAS & ELECTRIC
WATER	PROPOSED WELL
TELEPHONE	VERIZON
EXISTING IMPROVEMENTS	AS SHOWN
AREA	432.277 ACRES

Engineer

MH ENGINEERING CO.
16075 VINEYARD BLVD.
MORGAN HILL, CA 95037
(408) 779-7381

Owner

MALECH Et al
P.O.BOX 13006
COYOTE, CA95013
(408) 463-0549

Storm Water Treatment

Compliance with State Regional Water Quality will be achieved as follows:

1. Access Road drainage ditches shall be vegetated with Bio treatment
2. Culverts to have rock lined entrances and exits.
3. Each Building Site will provide
   a) Rain Barrels, or rain gardens
   b) Vegetated drainage swales
   c) Reduced inpervious surfaces
   d) Splash blocks at downspouts with runoff directed through landscape areas.
   e) Pavements patios and sidewalks runnoff directed through landscape areas.

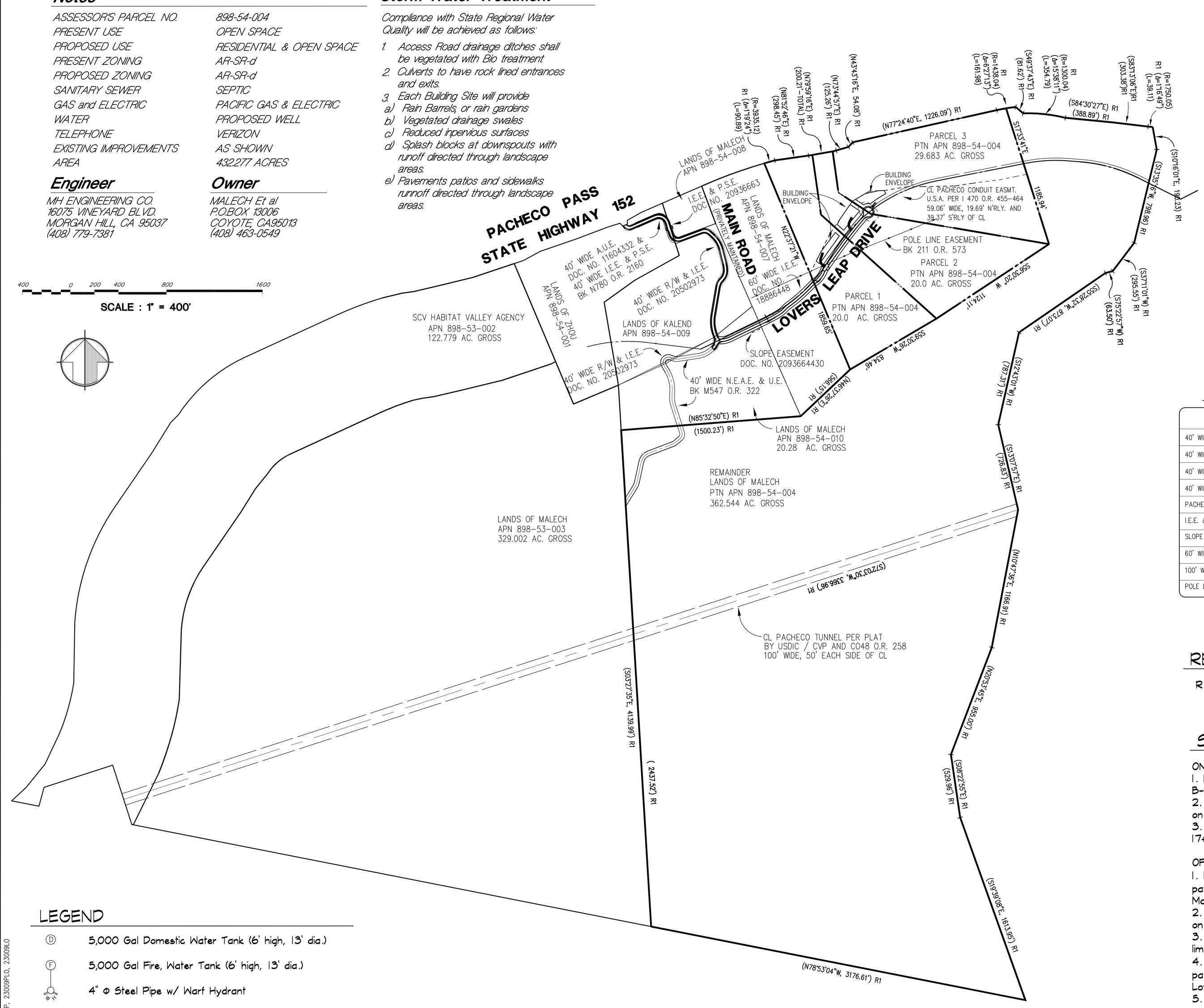

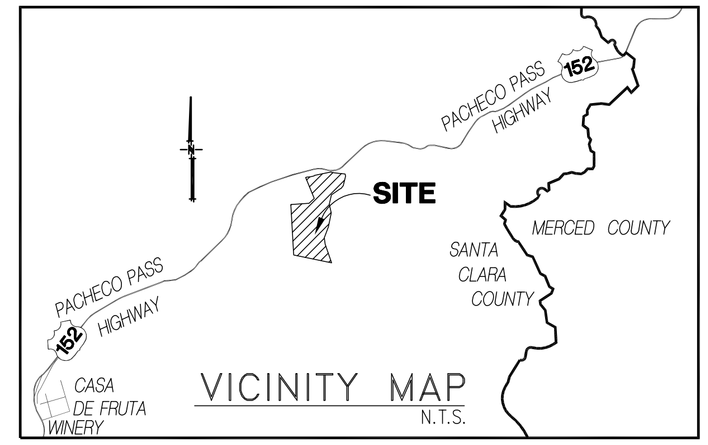

SHEET INDEX

1. OVERALL SITE AND GENERAL NOTES
2. SITE PLANS PCL - 1. 2 & 3
3. 20 SCALE SITE PLAN PCL - 1
4. 20 SCALE SITE PLAN PCL - 2
5. 20 SCALE SITE PLAN PCL - 3

EASEMENT OF RECORD

EASEMENT DESCRIPTION	FILE DOCUMENT	EASEMENT LOCATION
40' WIDE A.U.E.	DOC. NO. 11604332	SHEET 1 & 2
40' WIDE I.E.E. & P.S.E.	BK N780 O.R. 2160	SHEET 1 & 2
40' WIDE R/W & I.E.E.	DOC. NO. 20502973	SHEET 1 & 2
40' WIDE N.E.A.E. & U.E.	BK M547 O.R. 322	SHEET 1 & 2
PACHECO CONDUIT EASEMENT – USA	BK 1470 O.R. 455-464	SHEET 1 & 2
I.E.E. & P.S.E.	DOC NO. 20936663	SHEET 1 & 2
SLOPE EASEMENT	DOC. NO. 2093664430	SHEET 1 & 2
60' WIDE I.E.E.	DOC. NO. 18886448	SHEET 1 & 2
100' WIDE PACHECO TUNNEL	BK C048 O.R. 258	SHEET 1
POLE LINE EASEMENT	BK 211 O.R. 573	SHEET 1 & 2

REFERENCE DATA

R1 PARCEL MAP: BOOK 642 MAPS, PG 15

SCOPE OF WORK

ON SITE:
1. Install Santa Clara County SD2 Private Access Road per detail B-B on Sheet 2 from Lovers Leap Drive station 0+00 to 17+04.
2. Install Bio Swale along SD2 Private Access Road per detail B-B on Sheet 2.
3. Install CalFire approved Turnarounds at stations 11+30 and 17+04.

OFF SITE
1. Install Santa Clara County SD3 Private Access Road with 20' of pavement and 2' AB shoulders per detail A-A on Sheet 2 from Main Road station 0+86 to 19+15.
2. Install Bio Swale along SD3 Private Acess Road per detail A-A on Sheet 2.
3. Install signage at entrance of bridge for load capacity, speed limit and maximum axles.
4. Install Santa Clara County SD2 Private Aceess Road with 20' of pavement and 2' AB shoulder per detial B-B on sheet 2 from Lovers Leap Drive station 0+00 to 17.04.
5. Replace existing culverts on Lovers Leap Drive at stations 4+66 and 9+91.
6. Install road drainage improvements as shown on Preliminary Grading Plans.
7. Install CalFire approved turnaorunds at Main Road stations 5+50 and 19+15.

LEGEND

- (D) 5,000 Gal Domestic Water Tank (6' high, 13' dia.)
- (F) 5,000 Gal Fire, Water Tank (6' high, 13' dia.)
- 4" Φ Steel Pipe w/ Warf Hydrant
- * Min. inside turning radius is 50'
- 10' dia. Pacheco Conduit

FILE ...Site Plan 01 | SCRIPT | DATE April 2022 | SCALE 1"=400' | DRAWN BY JH/KH | CHECKED BY WJM

APPROVED BY

SUPERVISED BY

MH engineering Co.
225 Sixth Street, Ste. B.
Hollister, CA 95023
16075 Vineyard Boulevard
Morgan Hill, CA 95037

COVER SHEET
LANDS OF MALECH

JOB NO. 23009

SHEET 1 OF 5

L:\Projects2002\23009\dwg\23009 Site Plan 01DWG 4/28/2022 7:30:20 PM PDT

Xref's: 23009TP, 23009PLO, 23009LO

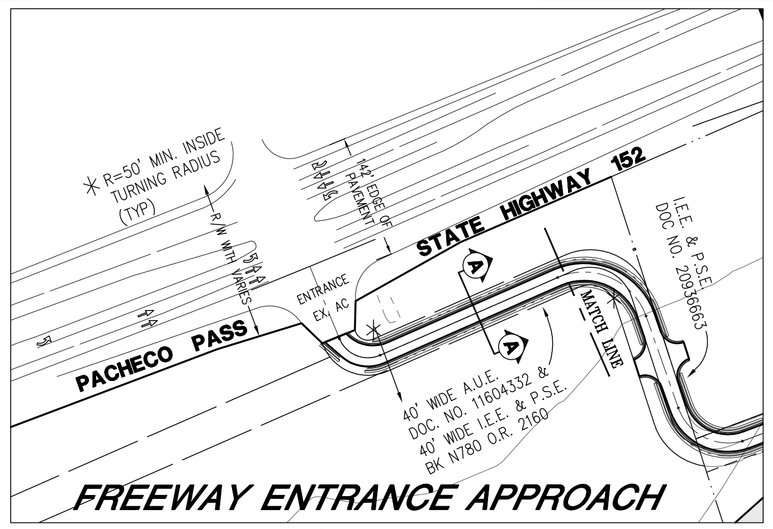

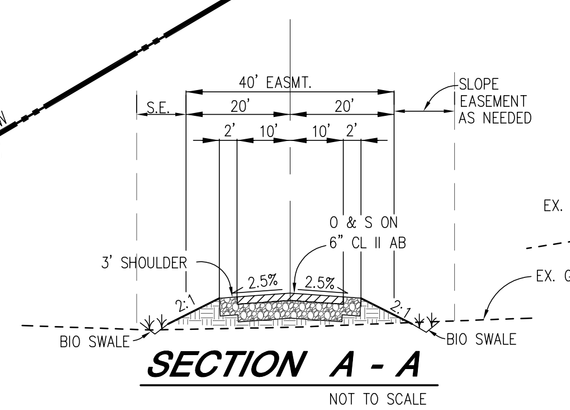

SECTION A - A
NOT TO SCALE

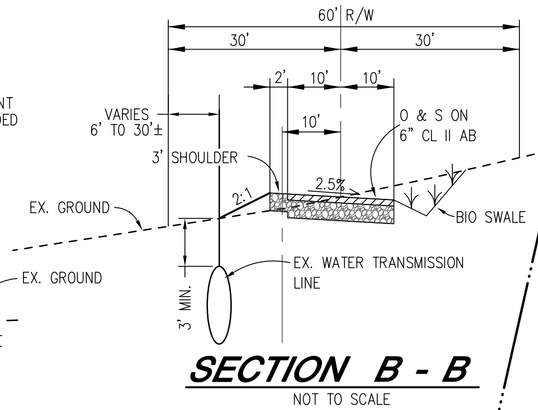

SECTION B - B
NOT TO SCALE

Section Note:

MAX. LONGITUDINAL GRADE IS 16% FOR SECT A–A, SECT. B–B AND SECT. C–C
ALL WEATHER SECTION TO SUPPORT 75,000 LBS.
FIRE TRUCK VERTICAL CLEARANCE 15 FEET MIN.
MINIMUM INSIDE TURNING RADIUS SHALL BE 50 FEET.

FILE _Site Plan 02
SCRIPT
DATE April 2022
SCALE 1"=100'
DRAWN BY JH/KH
CHECKED BY WJM

SUPERVISED BY

APPROVED BY

MHengineering Co.
16075 Vineyard Boulevard
Morgan Hill, CA 95037
225 Sixth Street, Ste. B.
Hollister, CA 95023

SITE PLANS FOR PARCELS 1, 2 & 3
LANDS OF MALECH

JOB NO. **23009**
SHEET **2**
OF **5**

L:\Projects\2002\23009\dwg\23009 Site Plan 02.dwg 4/28/2022 7:34:22 PM PDT

L:\Projects2002\23009\dwg\23009 Site Plan 03.dwg 4/28/2022 7:35:45 PM PDT

Xref's: 23009PLO, 23009-3D, 23009TP, 23009-20 Scale Existing Contours, 23009 hatch

FACE OF CURB LINE DATA		
LINE	LENGTH	BEARING
L6	226.72'	N35°42'45"E
L7	226.72'	N35°42'45"E

RIGHT OF WAY CURVE DATA			
CURVE	LENGTH	RADIUS	DELTA
C10	91.85'	161.00'	32°41'15"
C11	55.07'	239.00'	13°12'06"
C17	41.24'	179.00'	13°12'06"

SCALE : 1" = 20'

LANDS OF MALECH
APN 899-54-007

PARCEL 1

TOP OF BANK @ LOW WATER LINE

TOP OF BANK @ LOW WATER LINE

TOP OF BANK @ HIGH WATER LINE

(3) 5,000 GAL. WATER TANKS

PROPOSED WELL

4" Ø

W

D D F

H W

INSPECTION RISER TYPICAL

150' SETBACK

660 L.F. LEACHFIELD (PRIMARY)

660 L.F. LEACHFIELD (SECONDARY)

DIV. VALVE

1,500 GAL SEPTIC TANK

BUILDING ENVELOPE

R=50' MIN.

12' WIDE DWY WITH 3' SHLDR. ALL WEATHER SURFACE SLOPE ≤ 16%

B/A DRIVEWAY APPROACH (PRIVATELY MAINTAINED)

FIRE TRUCK TURN-AROUND

EX. PACHECO CONDUIT

PACHECO CONDUIT EASEMENT U.S.A. PER I 470 O.R. 455-464

BLDG. ENVELOPE

30' BLDG. ENVELOPE

GRASSY SWALE THIS SIDE

LOVERS LEAP DRIVE

Section Note:

MAX. LONGITUDINAL GRADE IS 16% FOR SECT A-A, SECT. B-B AND SECT. C-C
ALL WEATHER SECTION TO SUPPORT 75,000 LBS.
FIRE TRUCK VERTICAL CLEARANCE 15' MIN.
MINIMUM INSIDE TURNING RADIUS SHALL BE 50 FEET.

DRIVEWAY ≥ 150' LENGTH REQUIRED
STD. FIRE TRUCK TURNAROUND.

SECTION C - C

NOT TO SCALE

EX. GROUND
3' SHOULDER
2:1
3'
12'
2.5%
O & S ON 6" CL II AB
GRASS LINED DITCH

SITE PLAN FOR PARCEL 1

LANDS OF MALECH

MH engineering Co.
16075 Vineyard Boulevard, Morgan Hill, CA 95037
225 Sixth Street, Ste. B, Hollister, CA 95023

SUPERVISED BY

APPROVED BY

FILE ..Site Plan 03
SCRIPT
DATE April 2022
SCALE 1"= 20'
DRAWN BY AC
CHECKED BY WJM

JOB NO. 23009

SHEET 3 OF 5

L:\Projects2002\23009\dwg\23009 Site Plan 04.dwg 4/28/2022 7:36:34 PM PDT

Xref's: 23009PLO, 23009TP, 23009-3D, 23009-20 Scale Existing Contours, 23009 hatch

Section Note:

MAX. LONGITUDINAL GRADE IS 16% FOR SECT A-A, SECT. B-B AND SECT. C-C
ALL WEATHER SECTION TO SUPPORT 75,000 LBS.
FIRE TRUCK VERTICAL CLEARANCE 15' MIN.
MINIMUM INSIDE TURNING RADIUS SHALL BE 50 FEET.

DRIVEWAY ≥ 150' LENGTH REQUIRED
STD. FIRE TRUCK TURNAROUND.

SECTION C - C

NOT TO SCALE

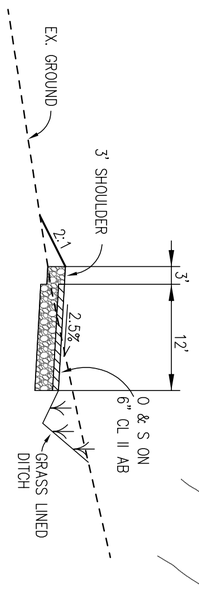

TOP OF BANK @ LOW WATER LINE

TOP OF BANK @ LOW WATER LINE

TOP OF BANK @ HIGH WATER LINE

360

350

400

390

450 LF LEACHFIELD (SECONDARY)

450 LF LEACHFIELD (PRIMARY)

13'

15'

15.75'

130'

DIV. VALVE

INSPECTION RISER TYPICAL

TIGHT LINE

1,500 GAL SEPTIC TANK

PARCEL 2

150' SETBACK

30' BLDG. ENVELOPE

BUILDING ENVELOPE

2:1 FILL SLOPE

12' WIDE DWY WITH 3' SHLDR.

B/4 DRIVEWAY APPROACH (PRIVATELY MAINTAINED)

EX. PACHECO CONDUIT

16+00

15+00

17+00

17+04.10

R40'

PT = 17+04.10

PACHECO CONDUIT EASEMENT U.S.A. PER I 470-O.R. 455-464

PROPOSED WELL

2:1 CUT SLOPE

LOVERS LEAP DRIVE

RIGHT OF WAY CURVE DATA			
CURVE	LENGTH	RADIUS	DELTA
C12	315.42'	3250.00'	5°33'38"
C13	15.35'	20.00'	43°59'04"
C14	234.60'	50.00'	268°49'38"
C15	15.66'	20.00'	44°51'23"
C16	309.03'	3190.00'	5°33'02"

SCALE : 1" = 20'

SITE PLAN FOR PARCEL 2

LANDS OF MALECH

MH engineering Co.
16075 Vineyard Boulevard
Morgan Hill, CA 95037
225 Sixth Street, Ste. B.
Hollister, CA 95023

SUPERVISED BY

APPROVED BY

JOB NO. 23009

SHEET 4 OF 5

FILE ..Site Plan 04
SCRIPT
DATE April 2022
SCALE 1"= 20'
DRAWN BY AJC
CHECKED BY WJM

L:\Projects2002\23009\dwg\23009 Site Plan 05.dwg 4/28/2022 7:37:24 PM PDT

Xref's: 23009-3D, 23009TP, 23009PLO, 23009-20 Scale Existing Contours, 23009 hatch

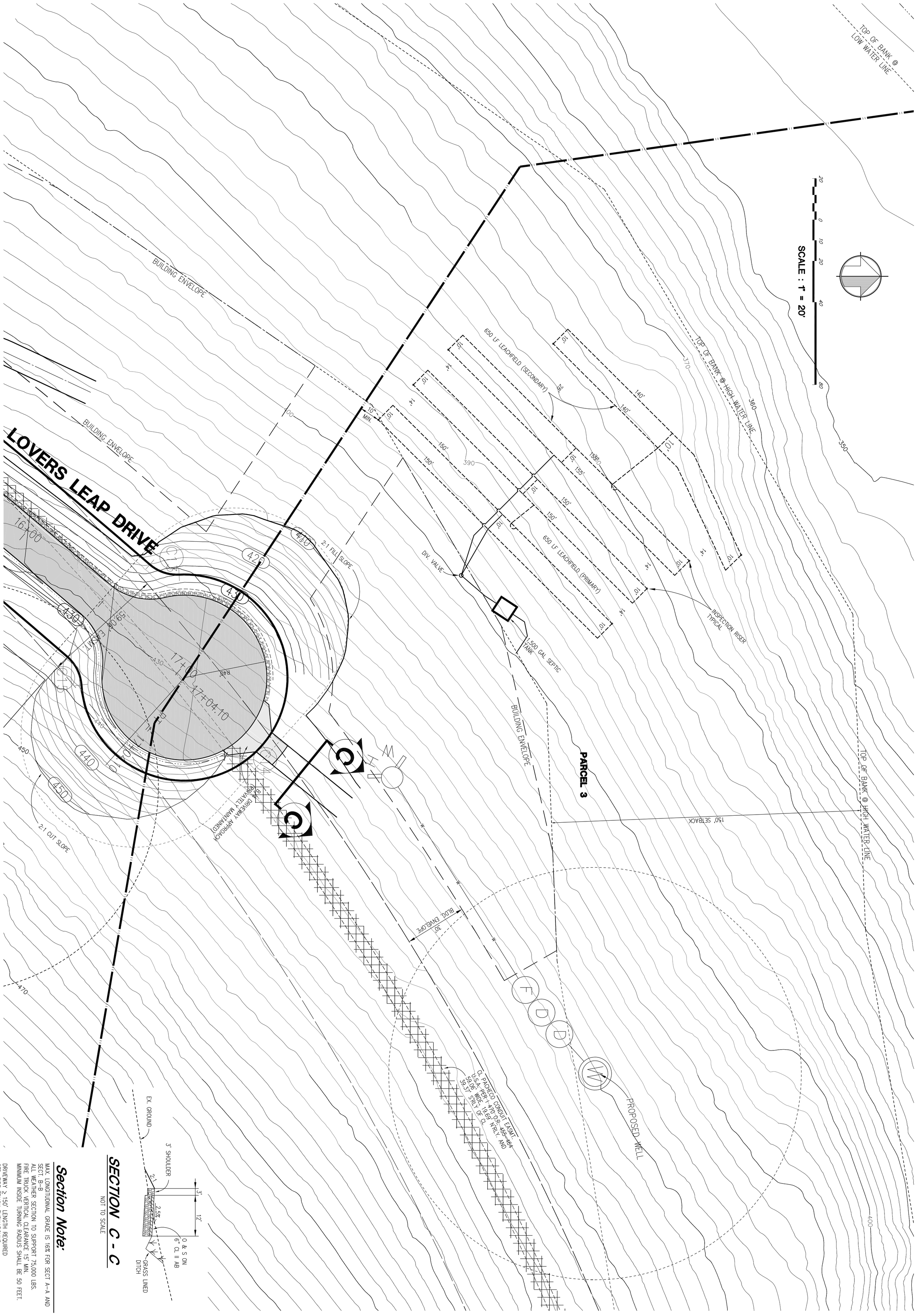

SECTION C - C

NOT TO SCALE

Section Note:

MAX. LONGITUDINAL GRADE IS 16% FOR SECT A-A AND SECT. B-B

ALL WEATHER SECTION TO SUPPORT 75,000 LBS.

FIRE TRUCK VERTICAL CLEARANCE 15' MIN.

MINIMUM INSIDE TURNING RADIUS SHALL BE 50 FEET.

DRIVEWAY ≥ 150' LENGTH REQUIRED STD. FIRE TRUCK TURNAROUND.

SITE PLAN FOR PARCEL 3

LANDS OF MALECH

MH engineering Co.
16075 Vineyard Boulevard
Morgan Hill, CA 95037
225 Sixth Street, Ste. B.
Hollister, CA 95023

SUPERVISED BY

APPROVED BY

JOB NO. 23009

SHEET 5 OF 5

FILE ..Site Plan 05
SCRIPT
DATE April 2022
SCALE 1"= 20'
DRAWN BY JH
CHECKED BY WJM