GRADUATE SCHOOL OF EDUCATION: ASA APPLICATION

STANFORD PROJECT # 5363 **BLDG ID** GSE North Building (03-300), Barnum (03-050), & GSE South Building (03-320) **PARCEL #** 142-07-085, 142-07-082, & 142-07-087

485, 505 & 507 LASUEN MALL, STANFORD, CA 93405

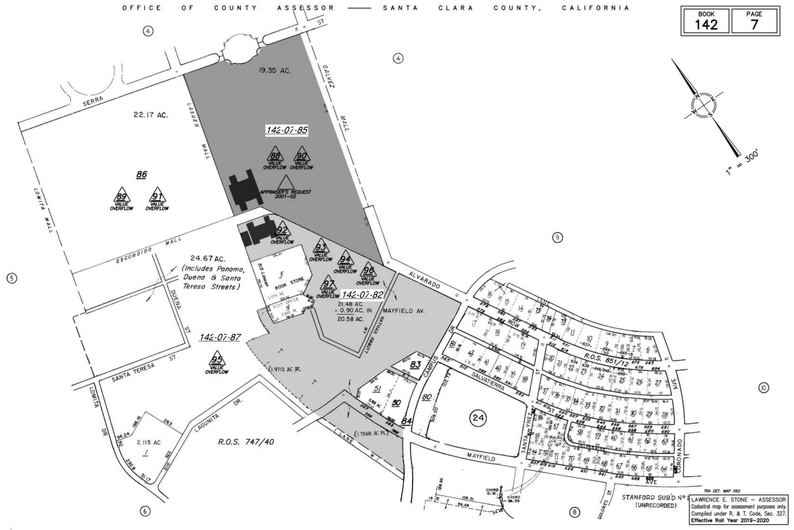

ASSESSOR'S PARCEL MAP: NTS

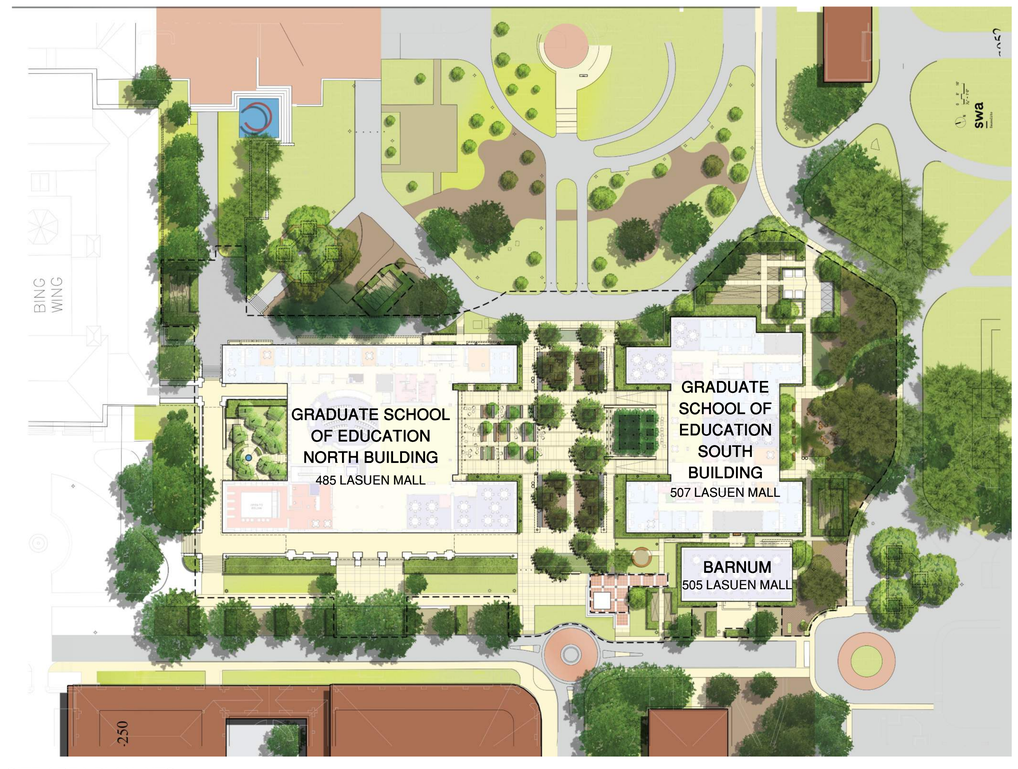

SITE AREA PLAN: NTS

SHEET INDEX - ASA

GENERAL

AA0.0	ASA SUBMITTAL COVER SHEET
EX2.00	GUP INFORMATION MAP
AA0.1	VICINITY MAP
AA0.2	EXISTING CONDITIONS
AA0.3	EXISTING CONDITIONS
AA0.4	SITE LOGISTICS PLAN
AA0.5	SITE ALIGNMENT
AA0.6	SITE ALIGNMENT
NA0.1	NB GUP ANALYSIS EXISTING
NA0.2	NB GUP ANALYSIS EXISTING
NA0.3	NB GUP ANALYSIS PROPOSED
NA0.4	NB GUP ANALYSIS PROPOSED
NA0.5	NB COMPARISON PLANS
NA0.6	NB COMPARISON PLANS
NA0.7	NB COMPARISON PLANS
SA0.1	BARNUM GUP ANALYSIS EXISTING
SA0.2	SB AND BARNUM, GUP ANALYSIS NEW

CIVIL

C1.01	EXISTING CONDITIONS
C1.02	EXISTING CONDITIONS
C2.01	SITE UTILITY DEMOLITION PLAN
C2.02	SITE UTILITY DEMOLITION PLAN
C3.01	PROPOSED UTILITY PLAN
C3.02	PROPOSED UTILITY PLAN
C4.01	PROPOSED GRADING PLAN
C5.00	SECTIONS
C5.01	SECTIONS
C5.02	SECTIONS
C6.00	STORMWATER MANAGEMENT PLAN
C7.01	FIRE TRUCK ACCESS
C7.02	CAMPUS FIRE RESPONSE ROUTES
C7.03	FIRE TRUCK TURNAROUND
C8.00	HORIZONTAL CONTROL PLAN
C9.01	EROSION CONTROL PLAN
C9.02	EROSION CONTROL PLAN
C10.00	CIVIL DETAILS
C10.01	CIVIL DETAILS
C10.02	CIVIL DETAILS

CIVIL CONT.

C10.03	CIVIL DETAILS
C10.04	CIVIL DETAILS

LANDSCAPE

L1.00	DEMOLITION, TREE PROTECTION, REMOVAL, AND RELOCATION NOTES
L1.01	DEMOLITION, TREE PROTECTION, REMOVAL, AND RELOCATION PLAN
L2.00	LANDSCAPE SITE PLAN NOTES
L2.01	LANDSCAPE SITE PLAN
L3.00	PLANTING NOTES
L3.01	PLANTING PLAN
L4.00	IRRIGATION NOTES AND LEGEND
L4.01	IRRIGATION PLAN
L4.02	IRRIGATION DETAILS
L4.03	IRRIGATION DETAILS
L4.04	IRRIGATION DETAILS

ARCHITECTURAL

NA1.0	NB BASEMENT FLOOR PLAN
NA1.1	NB FIRST FLOOR PLAN
NA1.2	NB SECOND FLOOR PLAN
NA1.3	NB THIRD FLOOR PLAN
NA1.4	NB ROOF PLAN
SA1.1	SB FIRST FLOOR PLAN
SA1.2	SB SECOND FLOOR PLAN
SA1.3	SB THIRD FLOOR PLAN
SA1.4	SB FOURTH FLOOR PLAN
SA1.5	SB ROOF PLAN
AA2.0	STREET SECTIONS
AA2.1	SITE ELEVATIONS
AA2.2	SITE SECTIONS
AA2.3	EXTERIOR RENDERS
NA3.1	NB EAST & WEST ELEVATIONS
NA3.2	NB NORTH AND NORTHERN COURTYARD ELEVATIONS
NA3.3	NB SOUTH AND SOUTHERN COURTYARD ELEVATIONS
SA3.1	SB EAST AND WEST ELEVATIONS
SA3.2	SB NORTH AND SOUTH ELEVATIONS

Sheet Count: 69

CODE INTERPRETATIONS

NORTH BUILDING

OCCUPANCY TYPE:

A-3	ALL FLOORS EXCEPT THIRD
B	ALL FLOORS
S-2	BASEMENT

TYPE OF CONSTRUCTION: NORTH BUILDING: IIIB

STRUCTURE RATING: 2 HR FIRE-RATED EXT. LOAD BEARING WALLS, 0 HR RATED STRUCTURAL FRAME

FIRE SPRINKLER: YES

BUILDING HEIGHT: 56'

ALLOWABLE HEIGHT: 65'

BUILDING AREAS:

NORTH BUILDING:	
BASEMENT	27,659
FIRST FLOOR:	24,671
SECOND FLOOR:	25,100
THIRD FLOOR:	17,065
TOTAL:	94,495

ALLOWABLE AREA:	A OCCUPANCY
ABOVE GRADE:	115,630
BELOW GRADE:	62,000

SOUTH BUILDING & BARNUM

OCCUPANCY TYPE:

A-3	FOURTH FLOOR
B	ALL FLOORS

TYPE OF CONSTRUCTION: SOUTH BUILDING: IIA BARNUM: VB, UNRATED

STRUCTURE RATING: SOUTH BUILDING: 1 HR BARNUM: NONE

FIRE SPRINKLER: YES

BUILDING HEIGHTS: SOUTH BLDG 56'-6 1/2" BARNUM : 30'9"

ALLOWABLE HEIGHT: SOUTH BLDG: 65' BARNUM: 60'

BUILDING AREAS:

SOUTH BUILDING:		BARNUM:	
		BASEMENT:	453
FIRST FLOOR:	17,412	FIRST FLOOR:	3,485
SECOND FLOOR:	16,683		
THIRD FLOOR:	16,683		
FOURTH FLOOR:	7,536		
TOTAL:	58,314	**TOTAL:**	3,938

ALLOWABLE AREA:	SEPARATED OCCUPANCIES
A (FOURTH FLOOR):	25,420 SF
B (FLOORS 1-3):	61,500 SF

PROJECT DESCRIPTION

NORTH BUILDING (NB):
MAJOR RENOVATION AND HISTORIC REHABILITATION OF AN EXISTING REINFORCED CONCRETE AND STEEL BUILDING FOR USE AS CLASSROOMS, OFFICES, LIBRARY, AND LECTURE HALL (NO CHANGE OF USE)

BARNUM & SOUTH BUILDING (SB):
DEMOLITION OF AN EXISTING TWO-STORY ADDITION TO A 1913 SINGLE STORY MASONRY BUILDING, AND THE CONSTRUCTION OF A NEW FOUR STORY STEEL-FRAMED OFFICE AND CLASSROOM BUILDING ADJACENT ON THE SAME SITE. BOTH STRUCTURES WILL BE FULLY SPRINKLED AND HAVE NEW MECHANICAL, ELECTRICAL, PLUMBING AND FIRE PROTECTIONS SYSTEMS.

SITE DATA INFORMATION

GENERAL SITE INFORMATION:

APN #1; PARCEL SIZE (WITHIN LIMITS OF WORK):	142-07-082 ; 1.26 ACRES
APN #2; PARCEL SIZE (WITHIN LIMITS OF WORK):	142-07-085 ; 1.51 ACRES
APN #3; PARCEL SIZE (WITHIN LIMITS OF WORK):	142-07-087 ; 0.30 ACRES
DEVELOPMENT DISTRICT:	A1
LAND USE DESIGNATION:	ACADEMIC
BUILDING FOOTPRINT:	SB: 17,369 SF | NB: 24,671 SF
SITE AREA:	3.07 ACRES
DEMOLITION AREA:	0.13 ACRES

GUP SQUARE FOOTAGE ANALYSIS

SEE SHEETS NA0.1 THROUGH SHEET SA0.2 FOR DETAILED ANALYSIS

BUILDING	METHOD 2 (GUP)	GSF
EXISTING CONDITIONS:		
GRADUATE SCHOOL OF EDUCATION NORTH BLDG.	88,184 SF	92,394 GSF
BARNUM		
EXISTING TO BE DEMOLISHED	7,198 SF	7,376 GSF
EXISTING TO REMAIN	3,485 SF	3,938 GSF
PROJECT TOTALS	**98,867 SF**	**103,708 GSF**
PROPOSED CONDITION:		
GRADUATE SCHOOL OF EDUCATION NORTH BLDG.	89,672 SF	94,495 GSF
GRADUATE SCHOOL OF EDUCATION SOUTH BLDG.	53,841 SF	60,052 GSF
BARNUM		
EXISTING TO REMAIN	3,485 SF	3,938 GSF
PROJECT TOTALS	**146,998 SF**	**158,485 GSF**
PROJECT NET ADDITIONAL	***48,131 SF***	***54,777 GSF***

PROJECT DIRECTORY

Client/Owner
Stanford University
340 Bonair Siding
Stanford, CA 94305
Phone: 650.996.6754
Mike Mithen — Project Manager — mithen@stanford.edu

Architect
CAW Architects, Inc.
455 Lambert Avenue
Palo Alto, CA 94306
Phone: 650.328.1818
Fax: 650.328.1888
Chris Wasney — Principal — csw@cawarchitects.com
Mousam Adcock — Project Manager — mousam@cawarchitects.com
Thomas Koyama — Designer — tkoyama@cawarchitects.com
Alexandria Evans — Designer — aevans@cawarchitects.com
Alex Siegel — Designer — asiegel@cawarchitects.com

William Rawn Associates, Architects, Inc.
10 Post Office Square, Suite 1010
Boston, MA 02109
Phone: 617.423.3470
Doug Johnston — Principal — djohnston@rawnarch.com
Erik Tellander — Senior Associate — etellander@rawnarch.com

Landscape Engineer
SWA
2200 Bridgeway Boulevard
PO Box 5904
Sausalito, CA 94966
Phone: 415.332.5100
John Wong — Principal — jwong@swagroup.com
Bill Hynes — Project Manager — whynes@swagroup.com

Civil Engineer
BKF Engineers
4670 Willow Road, Suite 250
Pleasanton, CA 94588
Phone: 925.396.7700
John Lamon — Associate — jlamon@bkf.com
Steven Reynolds — Project Manager — sreynolds@bkf.com
Chelsea Mudgett — Project Engineer — cmudgett@bkf.com

CAW ARCHITECTS
455 LAMBERT AVENUE PALO ALTO, CA 94306
WWW.CAWARCHITECTS.COM • 650.328.1818 • FAX: 650.328.1888

COPYRIGHT 2007 BY CAW ARCHITECTS, INC.

WILLIAM RAWN ASSOCIATES | Architects, Inc.
10 Post Office Sq.
Suite 1010
Boston, MA 02109

STAMP

LICENSED ARCHITECT — CHRISTOPHER SCOTT WASNEY — C-22190 — REN. 08-31-2021 — STATE OF CALIFORNIA

CONSULTANTS

MILESTONE	*DATE*
ASA SUBMISSION	12/07/2020
ASA RESUBMISSION	08/20/2021

PROJECT NAME

GRADUATE SCHOOL OF EDUCATION

485 LASUEN MALL

STANFORD, CA 94305

SHEET TITLE

ASA SUBMITTAL COVER SHEET

PROJECT NO. 17013
DRAWN BY TK / AS
CHECKED BY MA

SHEET

AA0.0

8/19/2021 10:12:20 PM

GUP INFORMATION MAP

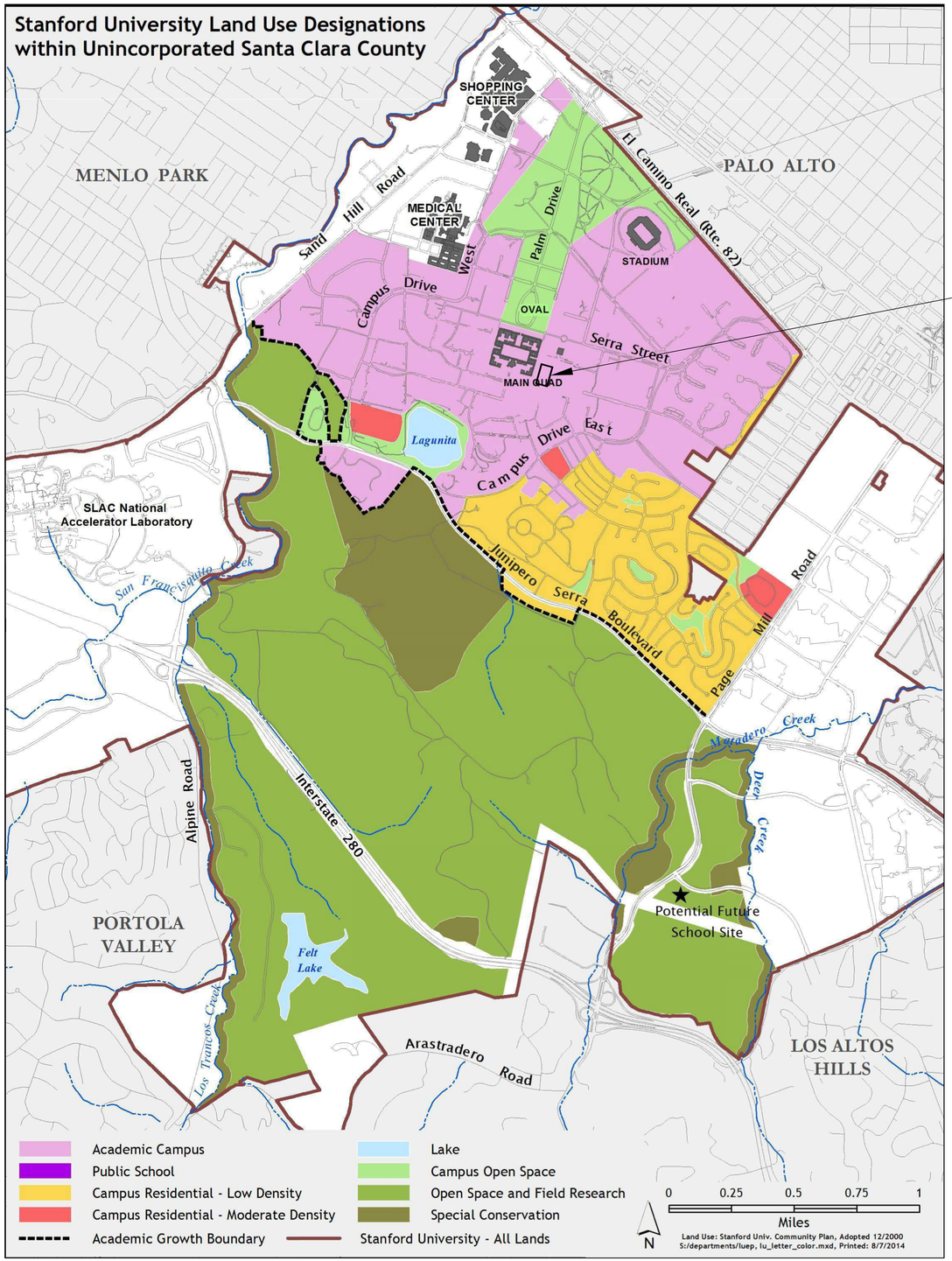

PROPOSED SITE

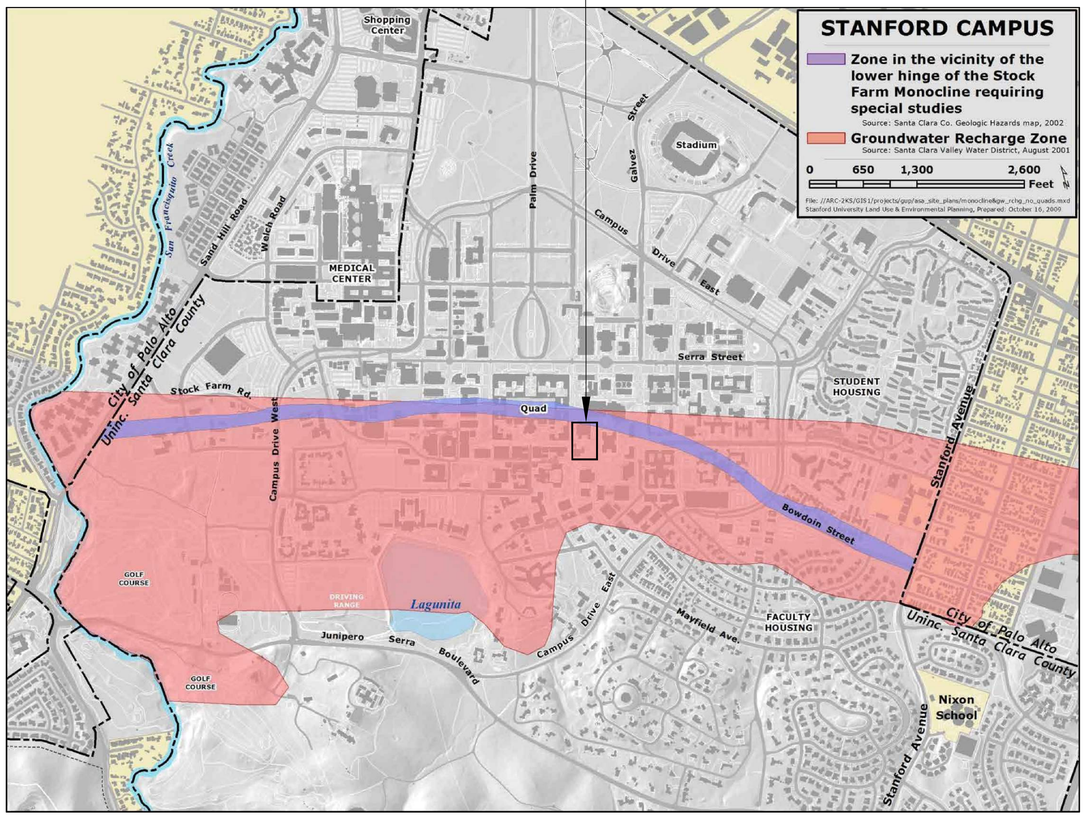

CAW ARCHITECTS

455 LAMBERT AVENUE PALO ALTO, CA 94306
WWW.CAWARCHITECTS.COM • 650.328.1818 • FAX: 650.328.1888

COPYRIGHT 2017 BY CAW ARCHITECTS, INC.

WILLIAM RAWN ASSOCIATES | Architects, Inc.
10 Post Office Sq.
Suite 1010
Boston, MA 02109

STAMP

REGISTERED PROFESSIONAL ENGINEER STEVEN REYNOLDS C 77988 CIVIL STATE OF CALIFORNIA

CONSULTANTS

BKF ENGINEERS
4670 WILLOW ROAD
SUITE 250
PLEASANTON, CA 94588
(925) 396-7700
www.bkf.com

MILESTONE	DATE
ASA SUBMISSION	12/7/2020
ASA RESUBMITTAL	8/20/2021

PROJECT NAME
STANFORD UNIVERSITY
GRADUATE SCHOOL OF EDUCATION
485 & 505 LASUEN MALL
STANFORD, CA 94305

SHEET TITLE
GUP INFORMATION MAP

PROJECT NO. 14029
DRAWN BY SR, NB
CHECKED BY JL

SHEET
EX2.00

7/6/19 5:39:03 PM

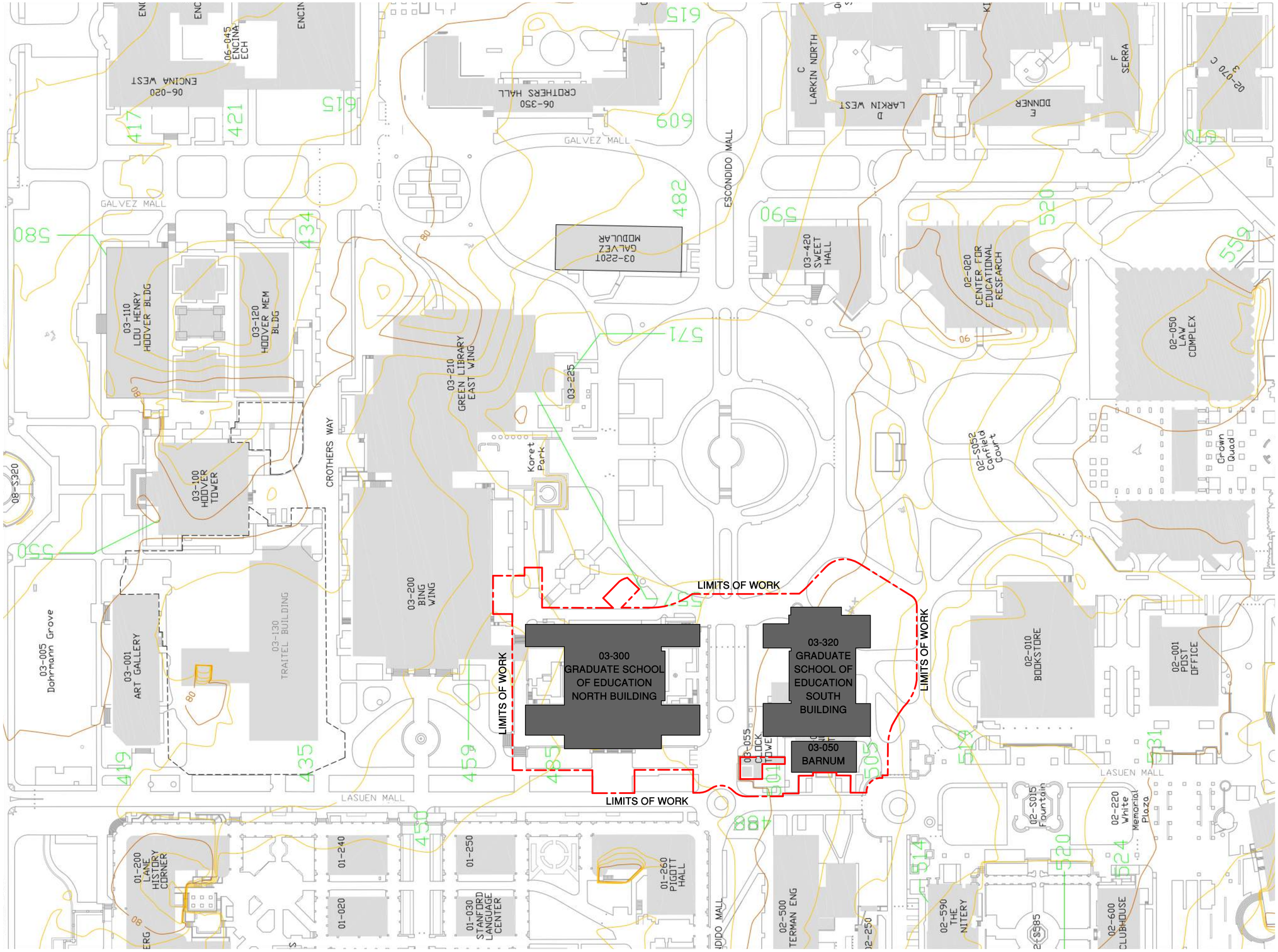

1 CAMPUS VICINITY MAP

1" = 60' -0"

CAW ARCHITECTS

455 LAMBERT AVENUE PALO ALTO, CA 94306

WWW.CAWARCHITECTS.COM • 650.328.1818 • FAX: 650.328.1888

COPYRIGHT 2007 BY CAW ARCHITECTS, INC.

WILLIAM RAWN ASSOCIATES | Architects, Inc.

10 Post Office Sq.
Suite 1010
Boston, MA 02109

STAMP

LICENSED ARCHITECT
CHRISTOPHER SCOTT WAGNEY
C-22197
REN. 04-30-12
STATE OF CALIFORNIA

CONSULTANTS

MILESTONE	DATE
ASA SUBMISSION	12/07/2020
ASA RESUBMISSION	08/20/2021

PROJECT NAME

GRADUATE SCHOOL OF EDUCATION

485 LASUEN MALL

STANFORD, CA 94305

SHEET TITLE

VICINITY MAP

PROJECT NO. 17013

DRAWN BY TK / AS

CHECKED BY MA

SHEET

AA0.1

8/19/2021 10:12:22 PM

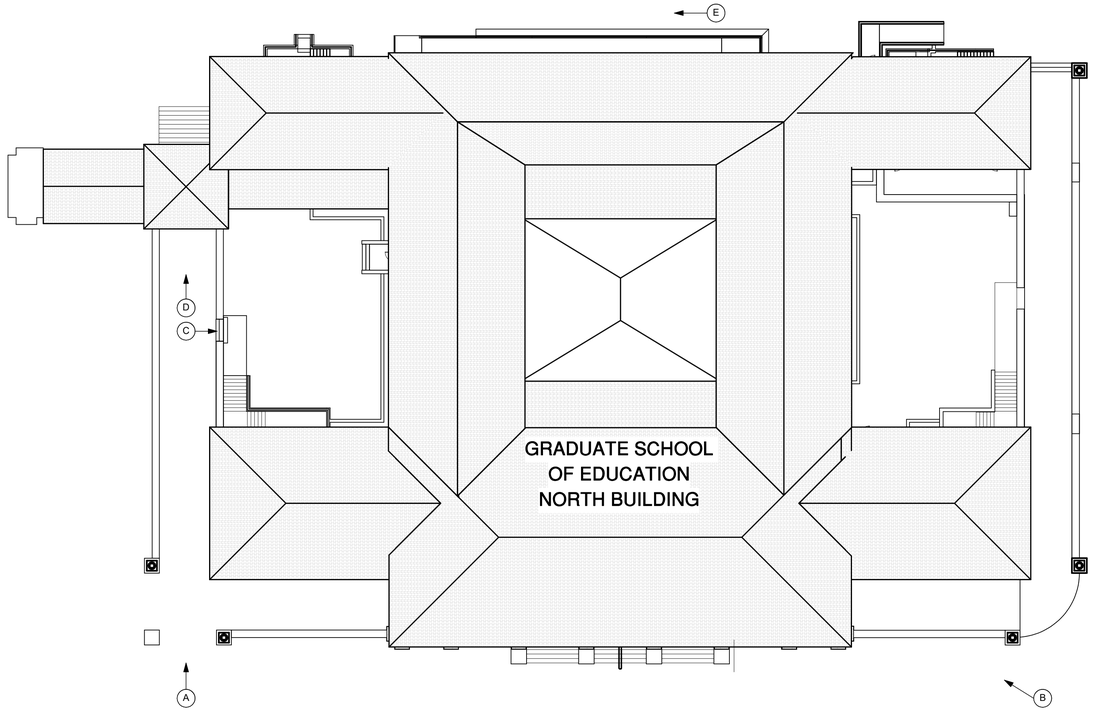

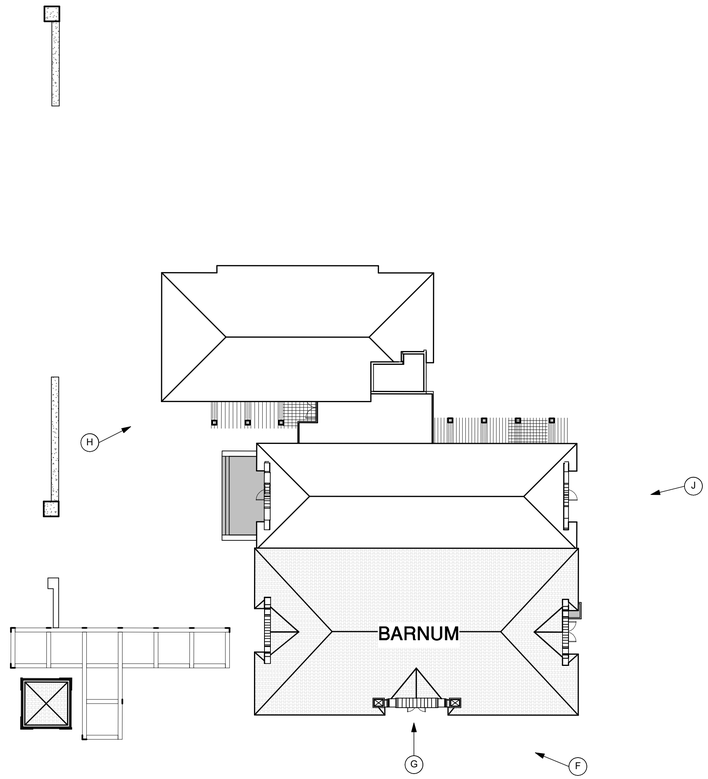

1 SITE PLAN
1" = 20'-0"


A


B

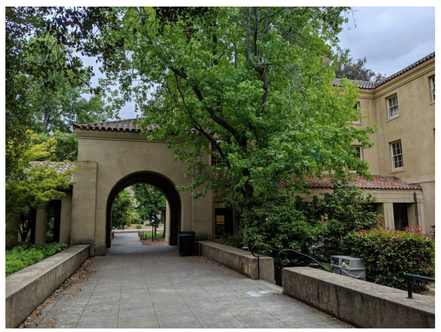
C


D

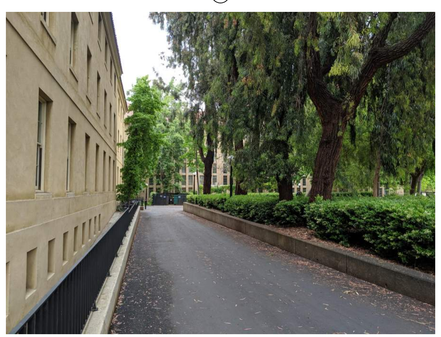
E

CAW ARCHITECTS
455 LAMBERT AVENUE PALO ALTO, CA 94306
WWW.CAWARCHITECTS.COM • 650.328.1818 • FAX: 650.328.1888

COPYRIGHT 2007 BY CAW ARCHITECTS, INC.

WILLIAM RAWN ASSOCIATES | Architects, Inc.
10 Post Office Sq.
Suite 1010
Boston, MA 02109

STAMP

LICENSED ARCHITECT
CHRISTOPHER SCOTT WAINEY
C-22197
REN. 04-30-12
STATE OF CALIFORNIA

CONSULTANTS

MILESTONE	DATE
ASA SUBMISSION	12/07/2020
ASA RESUBMISSION	08/20/2021

PROJECT NAME

GRADUATE SCHOOL OF EDUCATION

485 LASUEN MALL

STANFORD, CA 94305

SHEET TITLE

EXISTING CONDITIONS

PROJECT NO. 17013
DRAWN BY TK / AS
CHECKED BY MA

SHEET

AA0.2

8/19/2021 10:12:28 PM

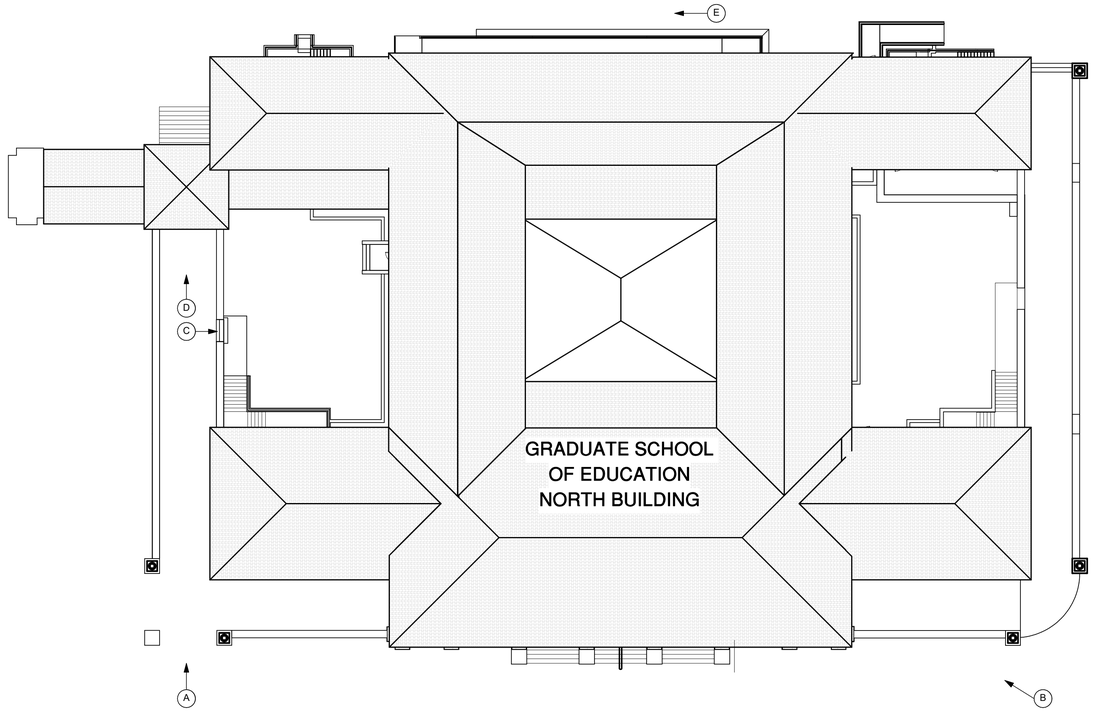

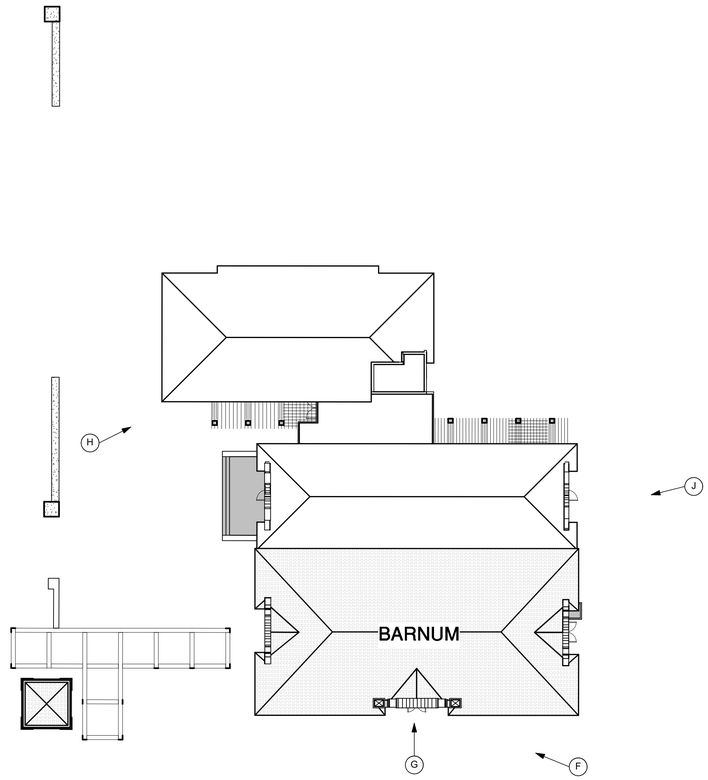

1 SITE PLAN
1" = 20'-0"



F



G



H



J

CAW ARCHITECTS

455 LAMBERT AVENUE PALO ALTO, CA 94306
WWW.CAWARCHITECTS.COM • 650.328.1818 • FAX: 650.328.1888

COPYRIGHT 2007 BY CAW ARCHITECTS, INC.

WILLIAM RAWN ASSOCIATES | Architects, Inc.
10 Post Office Sq.
Suite 1010
Boston, MA 02109

STAMP

LICENSED ARCHITECT
CHRISTOPHER SCOTT WAINEY
C-22197
REN. 04-30-12
STATE OF CALIFORNIA

CONSULTANTS

MILESTONE	DATE
ASA SUBMISSION	12/07/2020
ASA RESUBMISSION	08/20/2021

PROJECT NAME

GRADUATE SCHOOL OF EDUCATION

485 LASUEN MALL

STANFORD, CA 94305

SHEET TITLE

EXISTING CONDITIONS

PROJECT NO. 17013
DRAWN BY TK / AS
CHECKED BY MA

SHEET

AA0.3

8/19/2021 10:12:34 PM

Stanford Graduate School of Education
Construction Logistics Plan

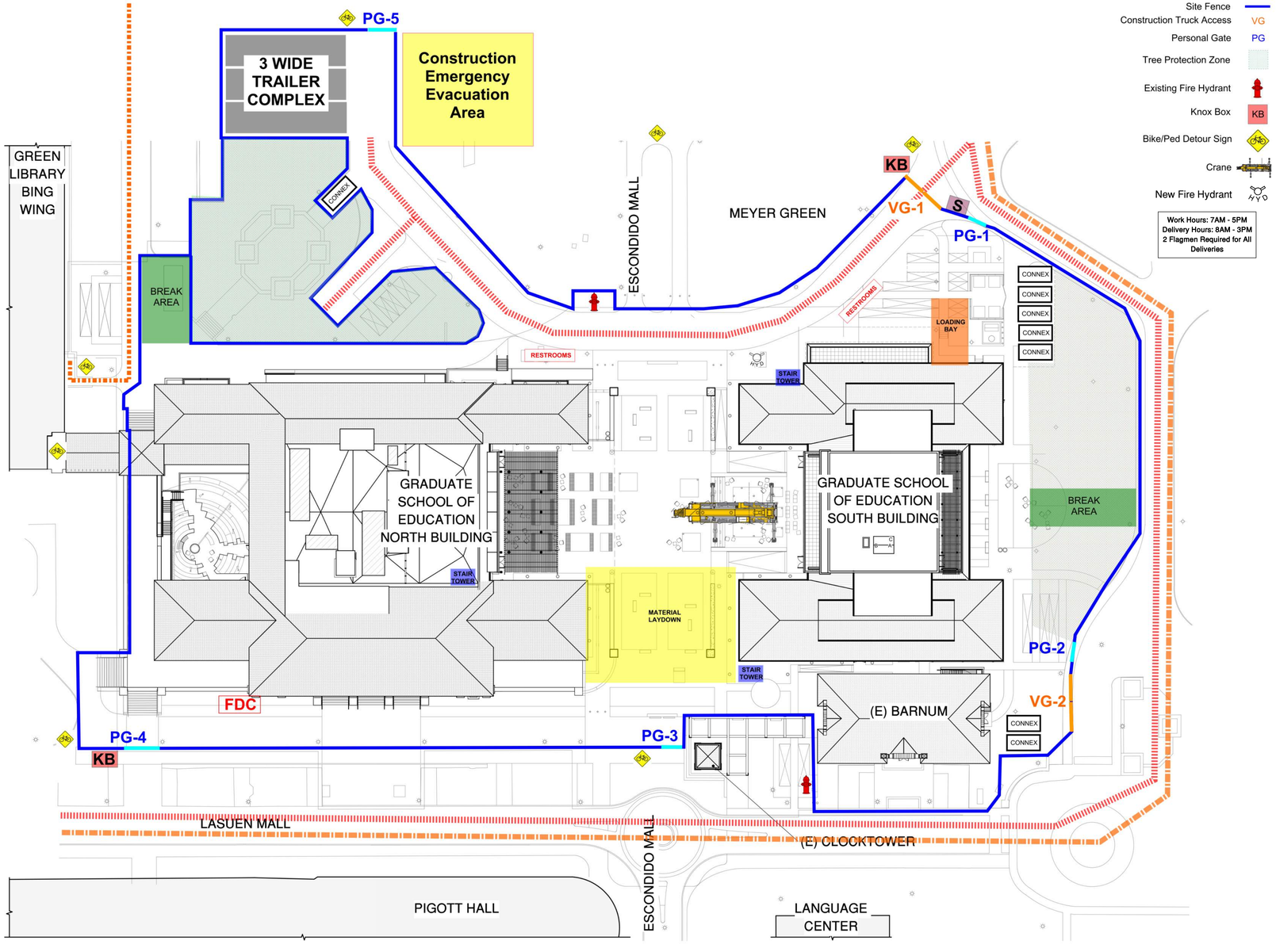

1 SITE LOGISTICS PLAN
1" = 30' -0"

LEGEND

- Project Sign, Duration & Contact Information — S
- Pedestrian/Bike Paths
- Fire Truck Access
- Site Fence
- Construction Truck Access — VG
- Personal Gate — PG
- Tree Protection Zone
- Existing Fire Hydrant
- Knox Box — KB
- Bike/Ped Detour Sign
- Crane
- New Fire Hydrant

Work Hours: 7AM - 5PM
Delivery Hours: 8AM - 3PM
2 Flagmen Required for All Deliveries

CAW ARCHITECTS
455 LAMBERT AVENUE PALO ALTO, CA 94306
WWW.CAWARCHITECTS.COM • 650.328.1818 • FAX: 650.328.1888

COPYRIGHT 2007 BY CAW ARCHITECTS, INC.

WILLIAM RAWN ASSOCIATES | Architects, Inc.
10 Post Office Sq.
Suite 1010
Boston, MA 02109

STAMP

LICENSED ARCHITECT
CHRISTOPHER SCOTT WAINEY
C-22197
REN. 04-30-22
STATE OF CALIFORNIA

CONSULTANTS

MILESTONE	DATE
ASA SUBMISSION	12/07/2020
ASA RESUBMISSION	08/20/2021

PROJECT NAME

GRADUATE SCHOOL OF EDUCATION

485 LASUEN MALL

STANFORD, CA 94305

SHEET TITLE

SITE LOGISTICS PLAN

PROJECT NO. 17013
DRAWN BY TK / AS
CHECKED BY MA

SHEET

AA0.4

8/19/2021 10:12:36 PM

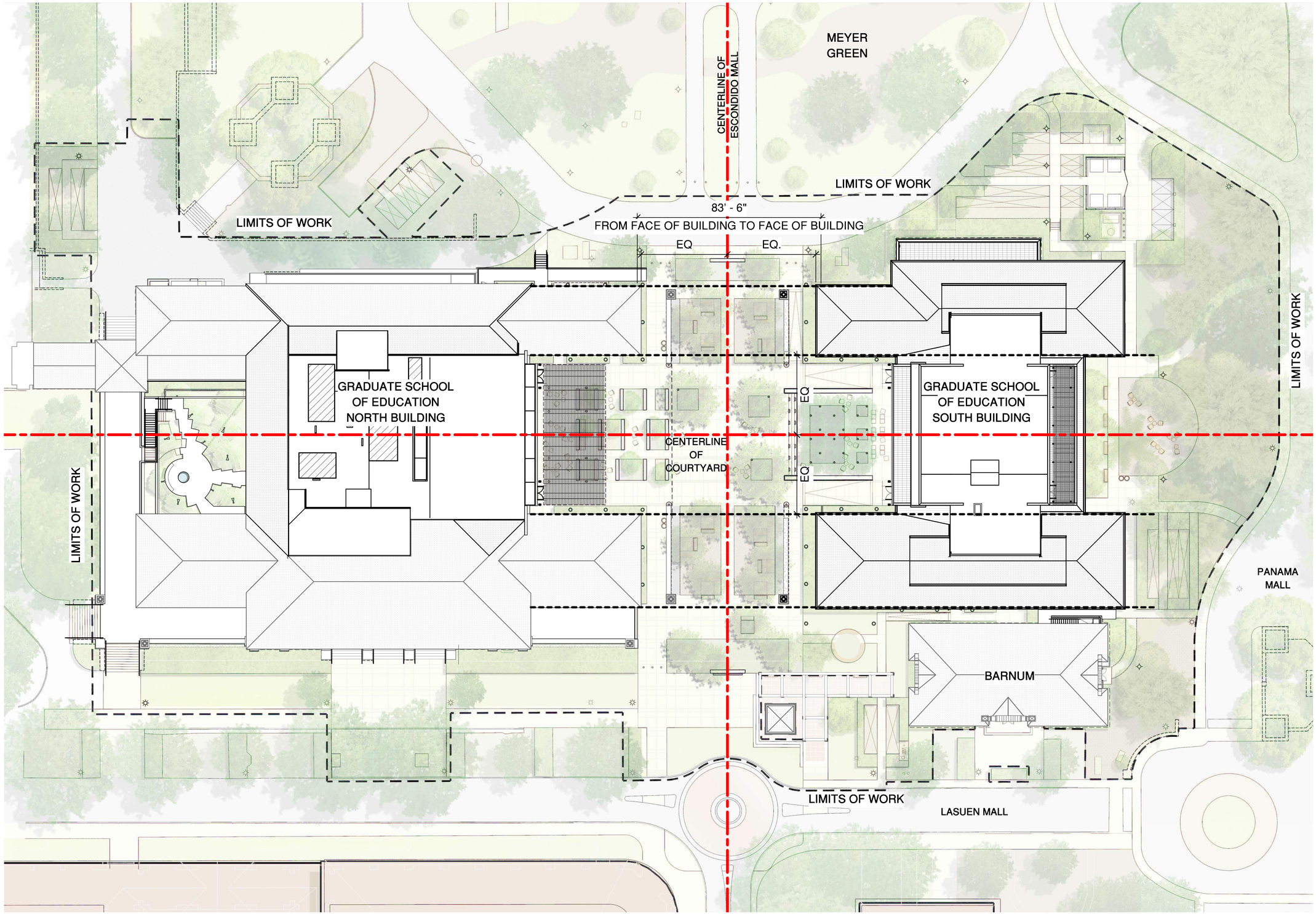

1 SITE PLAN
1" = 20'-0"

CAW ARCHITECTS
455 LAMBERT AVENUE PALO ALTO, CA 94306
WWW.CAWARCHITECTS.COM • 650.328.1818 • FAX: 650.328.1888

COPYRIGHT 2007 BY CAW ARCHITECTS, INC.

WILLIAM RAWN ASSOCIATES | Architects, Inc.
10 Post Office Sq.
Suite 1010
Boston, MA 02109

STAMP

LICENSED ARCHITECT
CHRISTOPHER SCOTT WAINEY
C-22197
REN. 04-30-12
STATE OF CALIFORNIA

CONSULTANTS

MILESTONE	DATE
ASA SUBMISSION	12/07/2020
ASA RESUBMISSION	08/20/2021

PROJECT NAME

GRADUATE SCHOOL OF EDUCATION

485 LASUEN MALL

STANFORD, CA 94305

SHEET TITLE

SITE ALIGNMENT

PROJECT NO. 17013
DRAWN BY TK / AS
CHECKED BY MA

SHEET

AA0.5

8/19/2021 10:12:43 PM

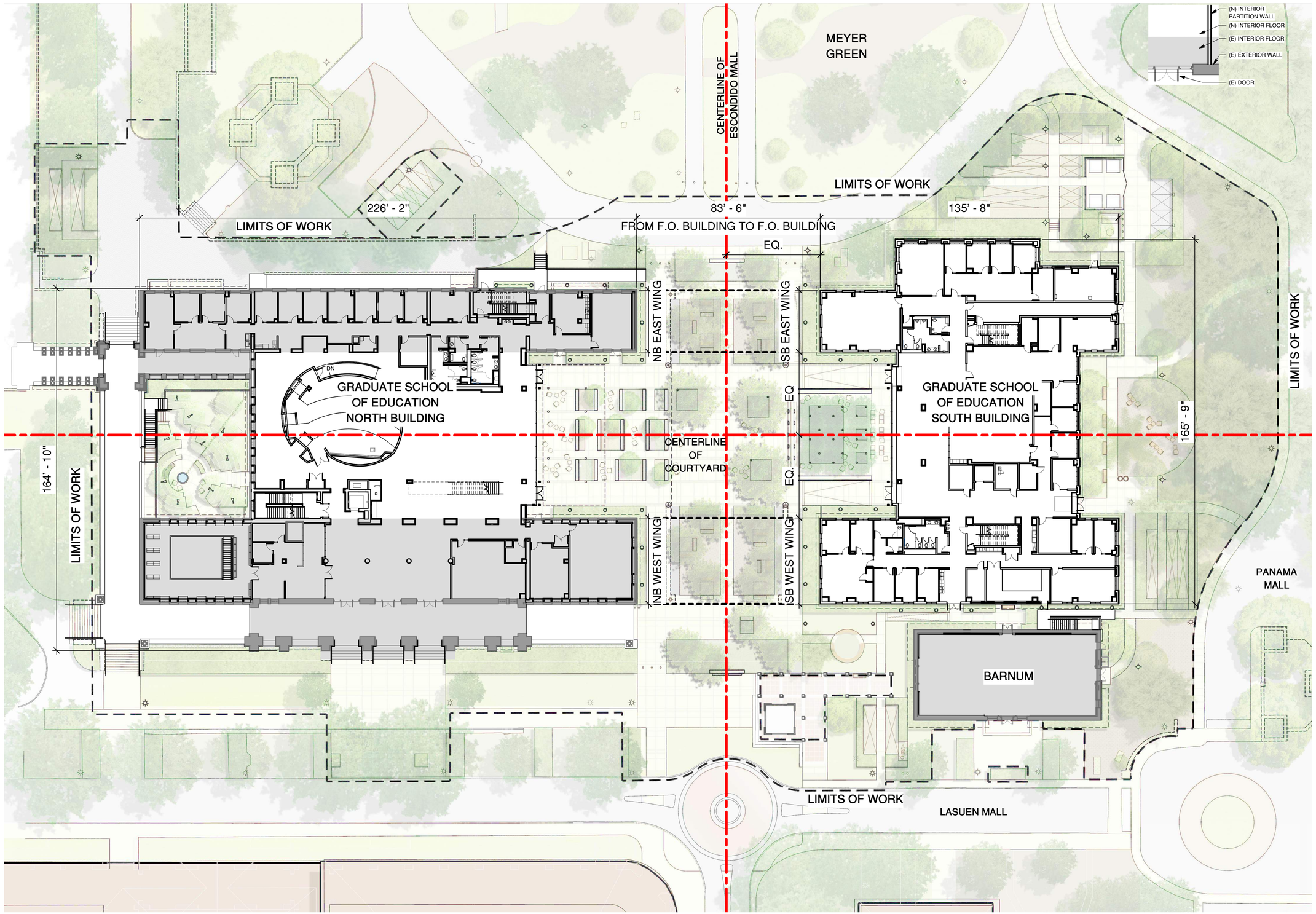

1 SITE PLAN
1" = 20'-0"

CAW ARCHITECTS

455 LAMBERT AVENUE PALO ALTO, CA 94306
WWW.CAWARCHITECTS.COM • 650.328.1818 • FAX: 650.328.1888

COPYRIGHT 2007 BY CAW ARCHITECTS, INC.

WILLIAM RAWN ASSOCIATES | Architects, Inc.
10 Post Office Sq.
Suite 1010
Boston, MA 02109

STAMP

LICENSED ARCHITECT
CHRISTOPHER SCOTT WAINEY
C-22197
REN. 04-30-12
STATE OF CALIFORNIA

CONSULTANTS

MILESTONE	DATE
ASA SUBMISSION	12/07/2020
ASA RESUBMISSION	08/20/2021

PROJECT NAME

GRADUATE SCHOOL OF EDUCATION

485 LASUEN MALL

STANFORD, CA 94305

SHEET TITLE

SITE ALIGNMENT

PROJECT NO. 17013
DRAWN BY TK / AS
CHECKED BY MA

SHEET

AA0.6

8/19/2021 10:12:53 PM

NORTH BUILDING - EXISTING

	GUP	GROSS
THIRD FLOOR	15,630 SF	15,846 SF
SECOND FLOOR	23,752 SF	24,040 SF
FIRST FLOOR	24,654 SF	24,937 SF
BASEMENT	24,148 SF	27,571 SF
TOTAL	88,184 SF	92,394 SF

GUP PLAN COLOR LEGEND

- AREA INCLUDED IN GENERAL USE PERMIT GROSS SQUARE FOOTAGE
- AREA EXCLUDED FROM GENERAL USE PERMIT GROSS SQUARE FOOTAGE

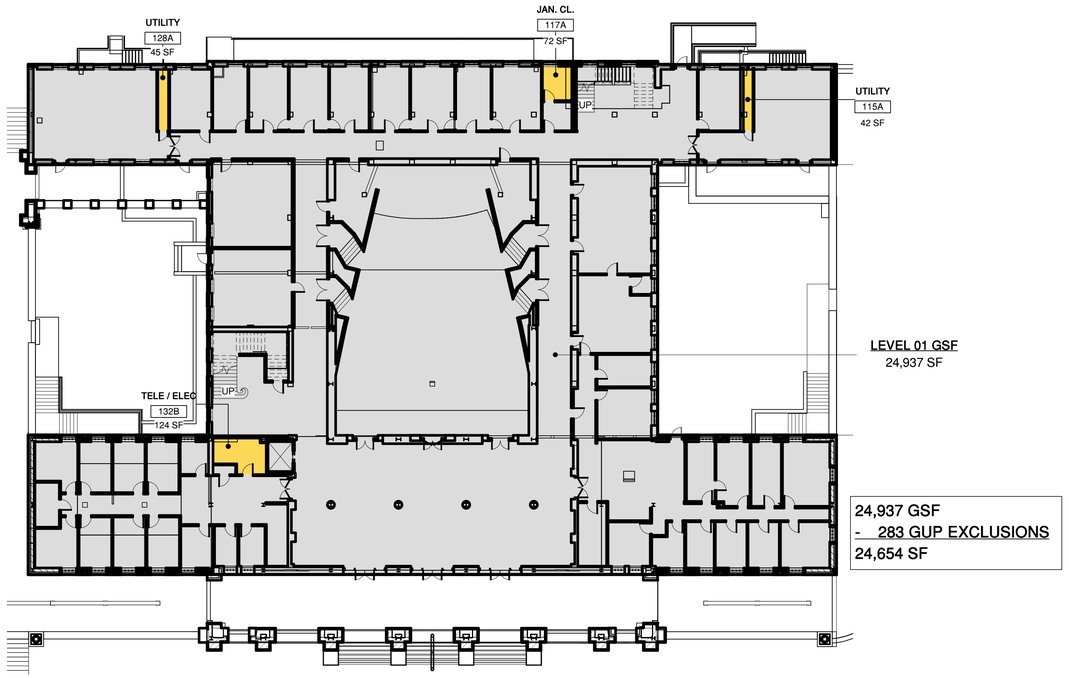

2 EXISTING FIRST FLOOR PLAN
1" = 20'-0"

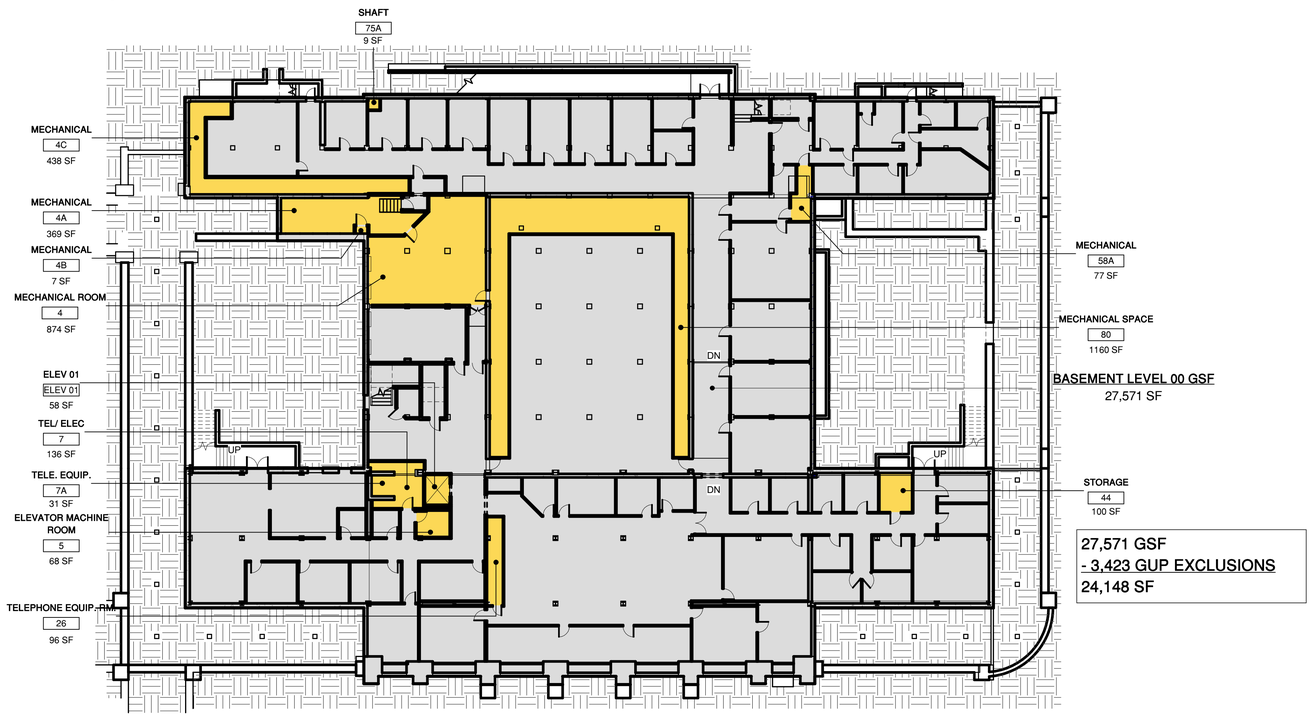

1 EXISTING BASEMENT PLAN
1" = 20'-0"

CAW ARCHITECTS
455 LAMBERT AVENUE PALO ALTO, CA 94306
WWW.CAWARCHITECTS.COM • 650.328.1818 • FAX: 650.328.1888

COPYRIGHT 2007 BY CAW ARCHITECTS, INC.

WILLIAM RAWN ASSOCIATES | Architects, Inc.
10 Post Office Sq.
Suite 1010
Boston, MA 02109

STAMP

LICENSED ARCHITECT
CHRISTOPHER SCOTT WAINEY
C-22197
REN. 04-30-12
STATE OF CALIFORNIA

CONSULTANTS

MILESTONE	DATE
ASA SUBMISSION	12/07/2020
ASA RESUBMISSION	08/20/2021

PROJECT NAME

NORTH BUILDING

GRADUATE SCHOOL OF EDUCATION

485 LASUEN MALL

STANFORD, CA 94305

SHEET TITLE

NB GUP ANALYSIS EXISTING

PROJECT NO. 17013
DRAWN BY TK / AS
CHECKED BY MA

SHEET

NA0.1

8/19/2021 10:13:17 PM

NORTH BUILDING - EXISTING

	GUP	GROSS
THIRD FLOOR	15,630 SF	15,846 SF
SECOND FLOOR	23,752 SF	24,040 SF
FIRST FLOOR	24,654 SF	24,937 SF
BASEMENT	24,148 SF	27,571 SF
TOTAL	88,184 SF	92,394 SF

GUP PLAN COLOR LEGEND

- AREA INCLUDED IN GENERAL USE PERMIT GROSS SQUARE FOOTAGE
- AREA EXCLUDED FROM GENERAL USE PERMIT GROSS SQUARE FOOTAGE

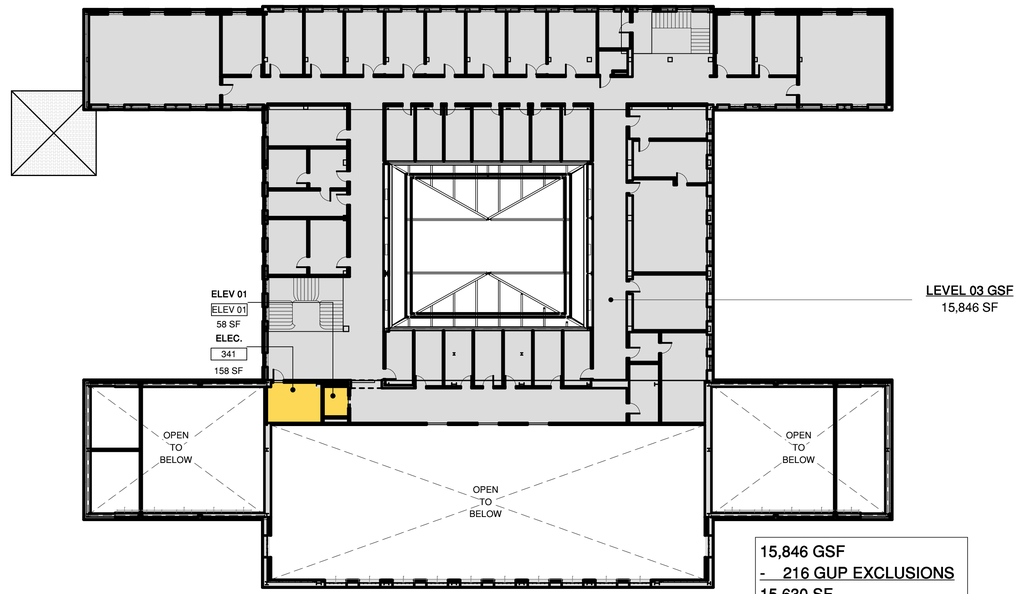

15,846 GSF
- 216 GUP EXCLUSIONS
15,630 SF

2 EXISTING THIRD FLOOR PLAN
1" = 20'-0"

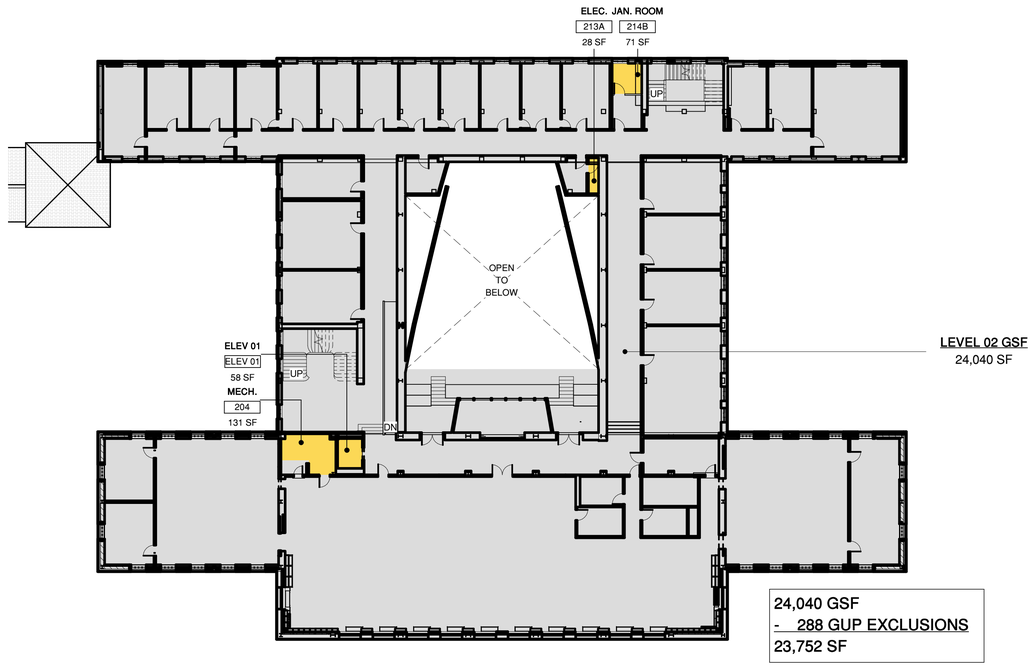

24,040 GSF
- 288 GUP EXCLUSIONS
23,752 SF

1 EXISTING SECOND FLOOR PLAN
1" = 20'-0"

TRUE NORTH
N

CAW ARCHITECTS
455 LAMBERT AVENUE PALO ALTO, CA 94306
WWW.CAWARCHITECTS.COM • 650.328.1818 • FAX: 650.328.1888

COPYRIGHT 2007 BY CAW ARCHITECTS, INC.

WILLIAM RAWN ASSOCIATES | Architects, Inc.
10 Post Office Sq.
Suite 1010
Boston, MA 02109

STAMP

LICENSED ARCHITECT
CHRISTOPHER SCOTT WAINEY
C-22197
REN. 04-30-12
STATE OF CALIFORNIA

CONSULTANTS

MILESTONE	DATE
ASA SUBMISSION	12/07/2020
ASA RESUBMISSION	08/20/2021

PROJECT NAME
NORTH BUILDING
GRADUATE SCHOOL OF EDUCATION
485 LASUEN MALL
STANFORD, CA 94305

SHEET TITLE
NB GUP ANALYSIS EXISTING

PROJECT NO. 17013
DRAWN BY TK / AS
CHECKED BY MA

SHEET
NA0.2

8/19/2021 10:13:22 PM

NORTH BUILDING - PROPOSED

	GUP	GSF
THIRD FLOOR	16,453 SF	17,065 SF
SECOND FLOOR	24,526 SF	25,100 SF
FIRST FLOOR	24,279 SF	24,671 SF
BASEMENT	24,414 SF	27,659 SF
TOTAL	89,672 SF	94,495 SF

GUP PLAN COLOR LEGEND

AREA INCLUDED IN GENERAL USE PERMIT GROSS SQUARE FOOTAGE

AREA EXCLUDED FROM GENERAL USE PERMIT GROSS SQUARE FOOTAGE

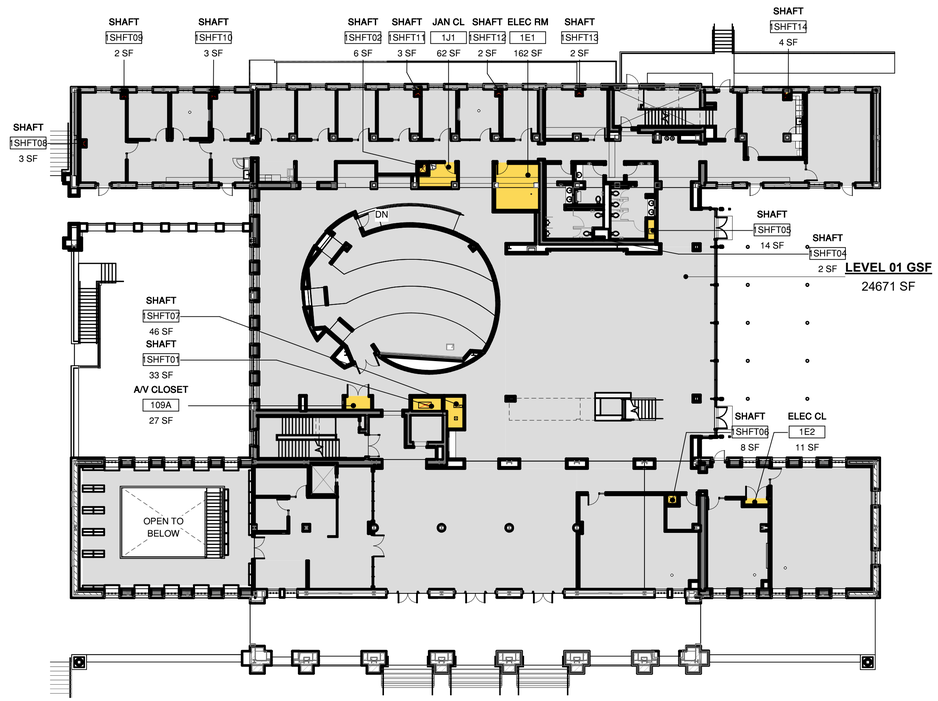

24,671 GSF
-392 GUP EXCLUSIONS
24,279 SF

2 PROPOSED FIRST FLOOR PLAN

1" = 20'-0"

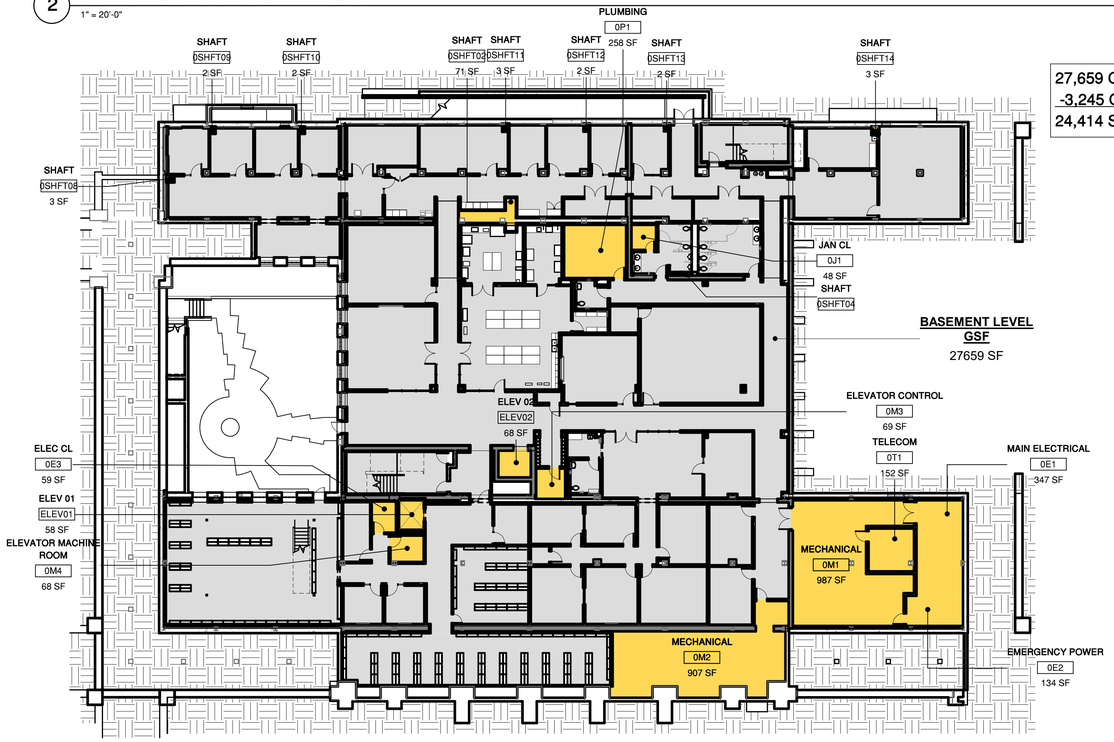

27,659 GSF
-3,245 GUP EXCLUSIONS
24,414 SF

1 PROPOSED BASEMENT PLAN

1" = 20'-0"

TRUE NORTH N

CAW ARCHITECTS
455 LAMBERT AVENUE PALO ALTO, CA 94306
WWW.CAWARCHITECTS.COM • 650.328.1818 • FAX: 650.328.1888

COPYRIGHT 2007 BY CAW ARCHITECTS, INC.

WILLIAM RAWN ASSOCIATES | Architects, Inc.
10 Post Office Sq.
Suite 1010
Boston, MA 02109

STAMP

LICENSED ARCHITECT CHRISTOPHER SCOTT KWONG C-22197 STATE OF CALIFORNIA

CONSULTANTS

MILESTONE	DATE
ASA SUBMISSION	12/07/2020
ASA RESUBMISSION	08/20/2021

PROJECT NAME

NORTH BUILDING
GRADUATE SCHOOL OF EDUCATION
485 LASUEN MALL
STANFORD, CA 94305

SHEET TITLE

NB GUP ANALYSIS PROPOSED

PROJECT NO. 17013
DRAWN BY TK / AS
CHECKED BY MA

SHEET

NA0.3

8/19/2021 10:13:33 PM

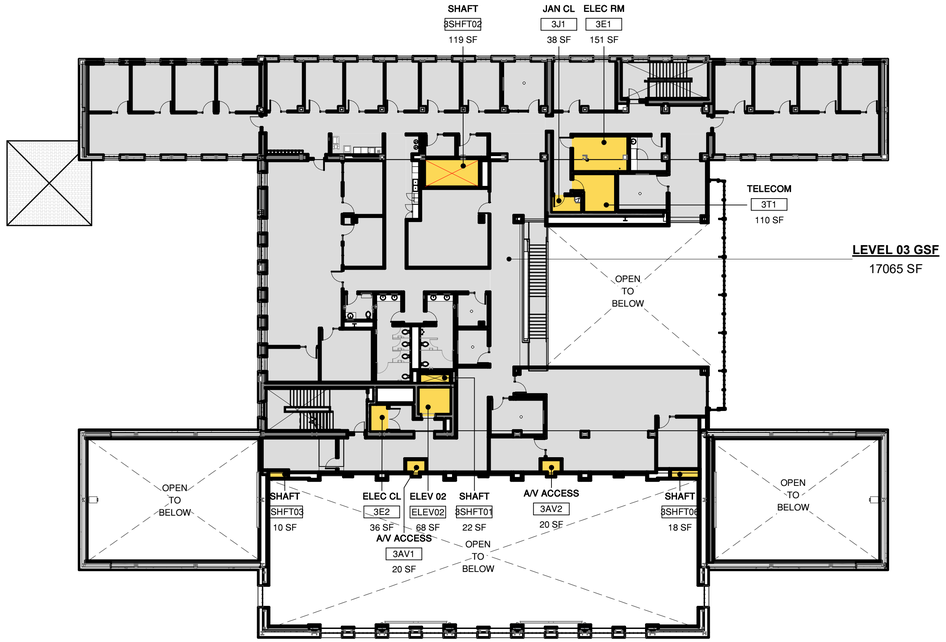

17,065 GSF
- 612 GUP EXCLUSIONS
16,453 SF

2 PROPOSED THIRD FLOOR PLAN

1" = 20'-0"

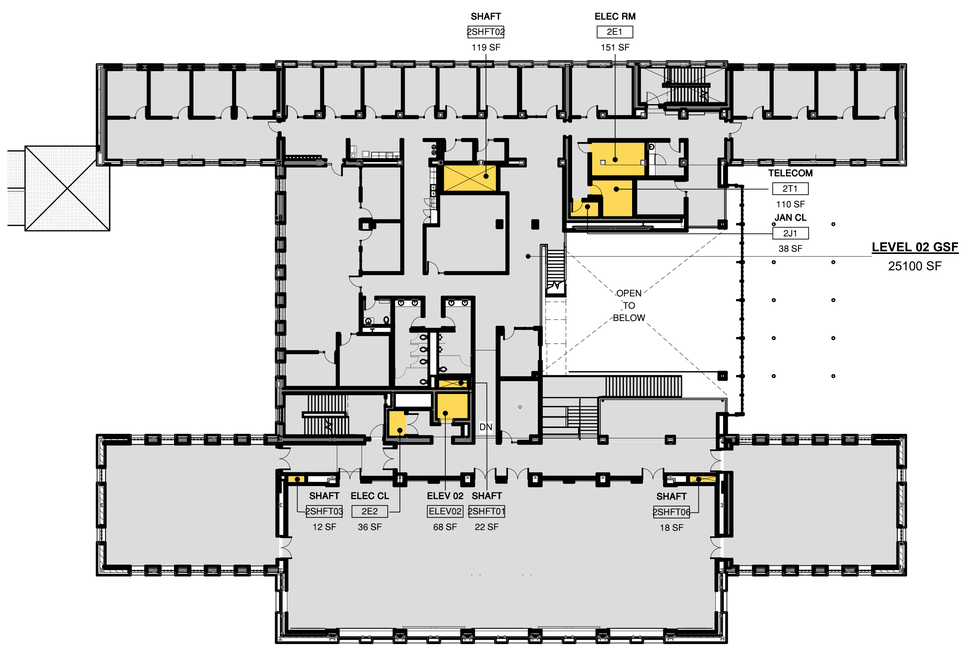

25,100 GSF
- 574 GUP EXCLUSIONS
24,526 SF

1 PROPOSED SECOND FLOOR PLAN

1" = 20'-0"

TRUE NORTH N

NORTH BUILDING - PROPOSED

	GUP	GSF
THIRD FLOOR	16,453 SF	17,065 SF
SECOND FLOOR	24,526 SF	25,100 SF
FIRST FLOOR	24,279 SF	24,671 SF
BASEMENT	24,414 SF	27,659 SF
TOTAL	89,672 SF	94,495 SF

GUP PLAN COLOR LEGEND

- AREA INCLUDED IN GENERAL USE PERMIT GROSS SQUARE FOOTAGE
- AREA EXCLUDED FROM GENERAL USE PERMIT GROSS SQUARE FOOTAGE

CAW ARCHITECTS
455 LAMBERT AVENUE PALO ALTO, CA 94306
WWW.CAWARCHITECTS.COM • 650.328.1818 • FAX: 650.328.1888

COPYRIGHT 2017 BY CAW ARCHITECTS, INC.

WILLIAM RAWN ASSOCIATES | Architects, Inc.
10 Post Office Sq.
Suite 1010
Boston, MA 02109

STAMP

LICENSED ARCHITECT CHRISTOPHER SCOTT KWONG C 22197 REN. 08-31-2021 STATE OF CALIFORNIA

CONSULTANTS

MILESTONE	DATE
ASA SUBMISSION	12/07/2020
ASA RESUBMISSION	08/20/2021

PROJECT NAME

NORTH BUILDING
GRADUATE SCHOOL OF EDUCATION

485 LASUEN MALL

STANFORD, CA 94305

SHEET TITLE

NB GUP ANALYSIS PROPOSED

PROJECT NO. 17013
DRAWN BY TK / AS
CHECKED BY MA

SHEET

NA0.4

8/19/2021 10:13:42 PM

PLAN LEGEND

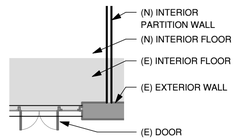

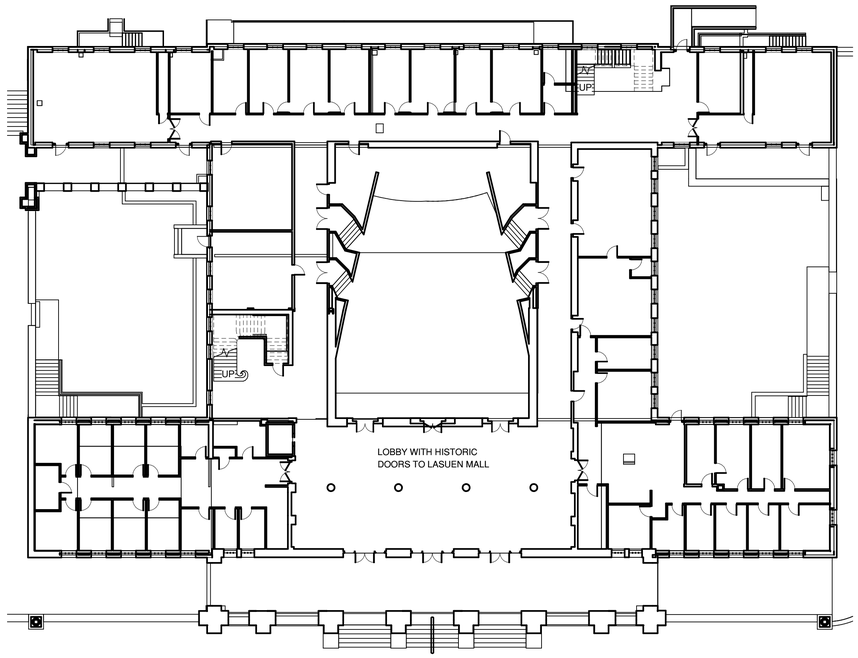

4 EXISTING FIRST FLOOR PLAN
1" = 20'-0"

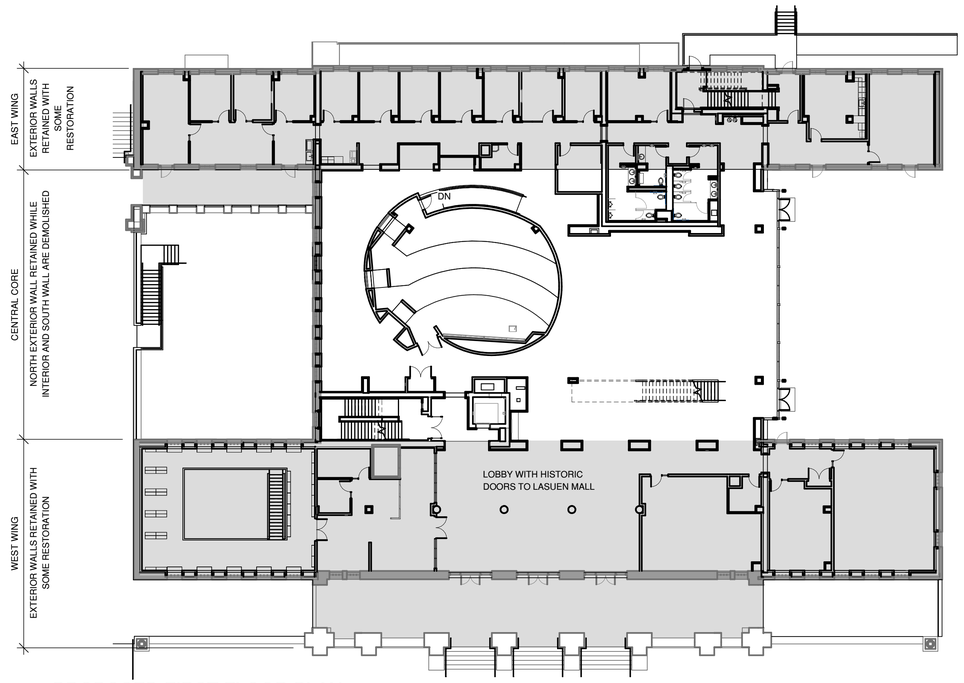

2 PROPOSED FIRST FLOOR PLAN
1" = 20'-0"

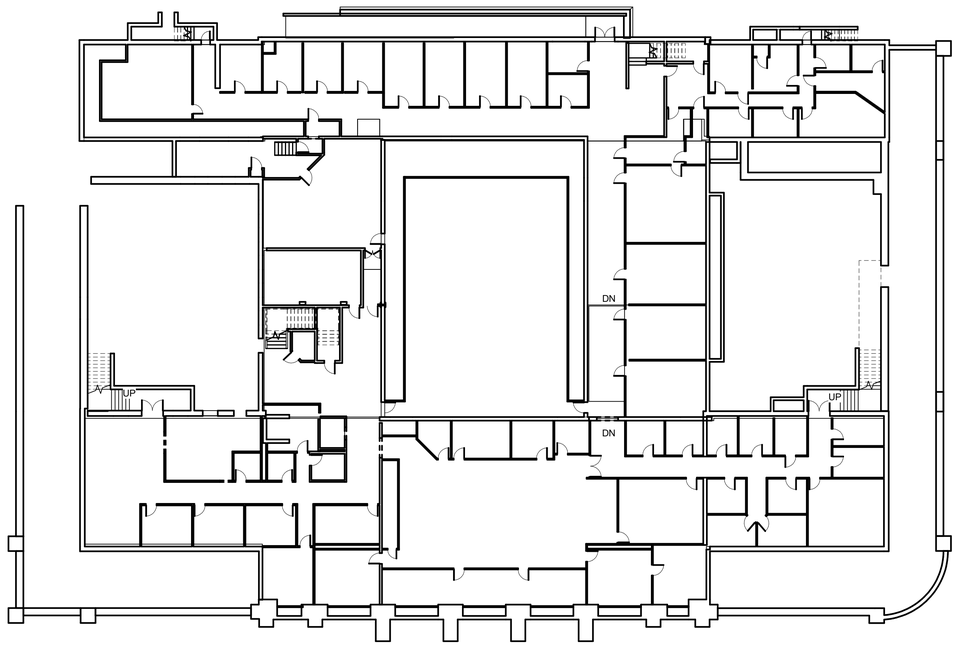

3 EXISTING BASEMENT PLAN
1" = 20'-0"

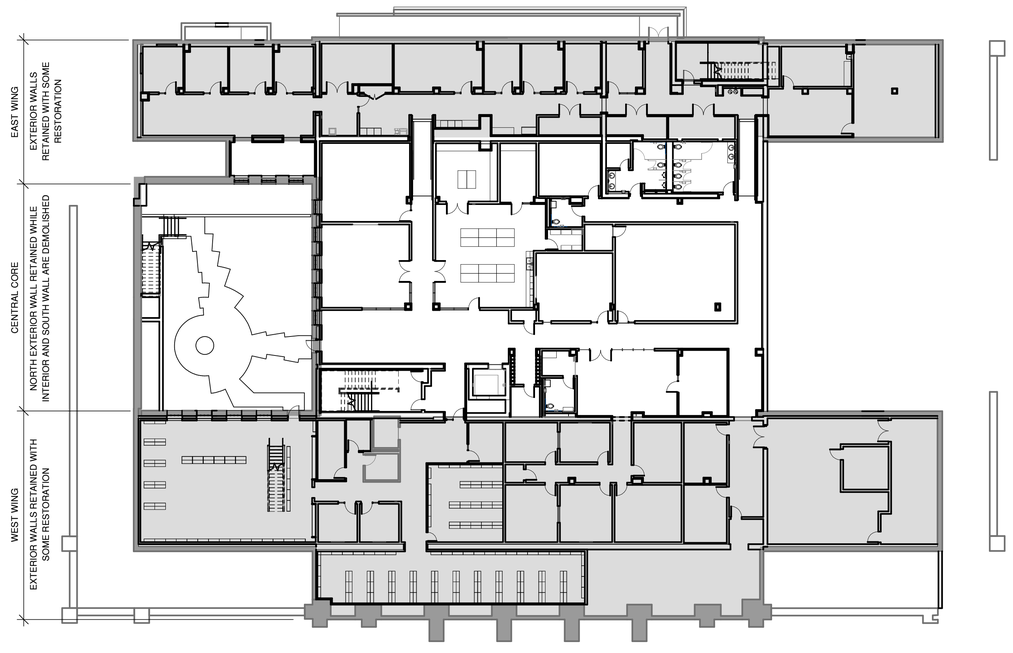

1 PROPOSED BASEMENT PLAN
1" = 20'-0"

CAW ARCHITECTS
455 LAMBERT AVENUE PALO ALTO, CA 94306
WWW.CAWARCHITECTS.COM • 650.328.1818 • FAX: 650.328.1888

COPYRIGHT 2007 BY CAW ARCHITECTS, INC.

WILLIAM RAWN ASSOCIATES | Architects, Inc.
10 Post Office Sq.
Suite 1010
Boston, MA 02109

STAMP

LICENSED ARCHITECT CHRISTOPHER SCOTT KWONG C-22197 EXP. 04-30-22 STATE OF CALIFORNIA

CONSULTANTS

MILESTONE	DATE
ASA SUBMISSION	12/07/2020
ASA RESUBMISSION	08/20/2021

PROJECT NAME

NORTH BUILDING
GRADUATE SCHOOL OF EDUCATION
485 LASUEN MALL
STANFORD, CA 94305

SHEET TITLE

NB COMPARISON PLANS

PROJECT NO. 17013
DRAWN BY TK / AS
CHECKED BY MA

SHEET

NA0.5

8/19/2021 10:13:52 PM

PLAN LEGEND

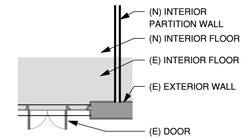

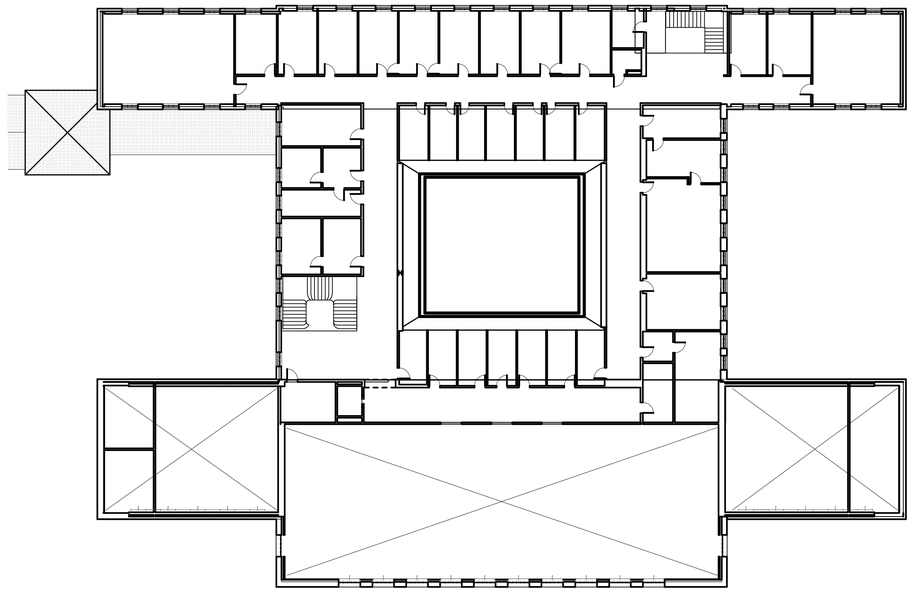

4 EXISTING THIRD FLOOR PLAN
1" = 20'-0"

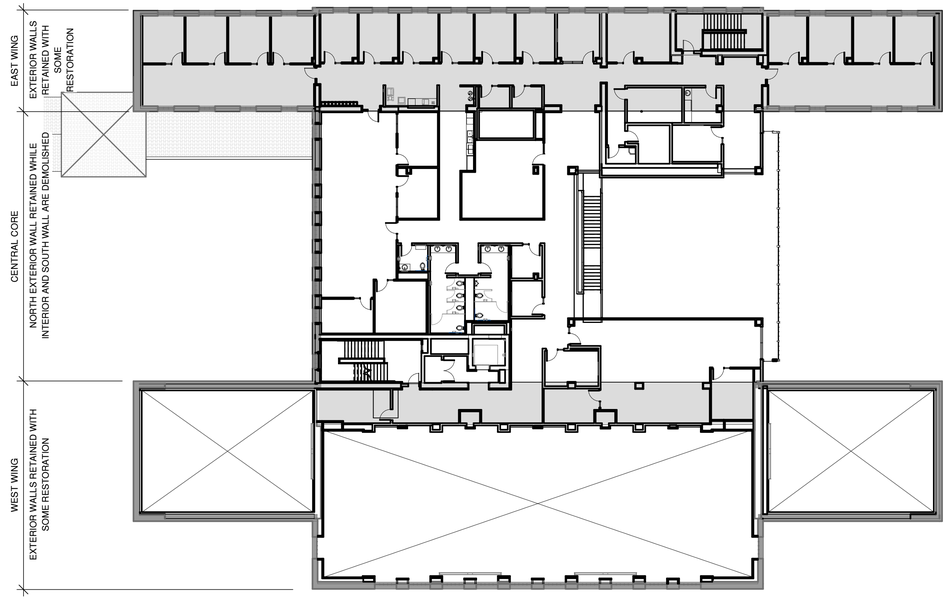

3 PROPOSED THIRD FLOOR PLAN
1" = 20'-0"

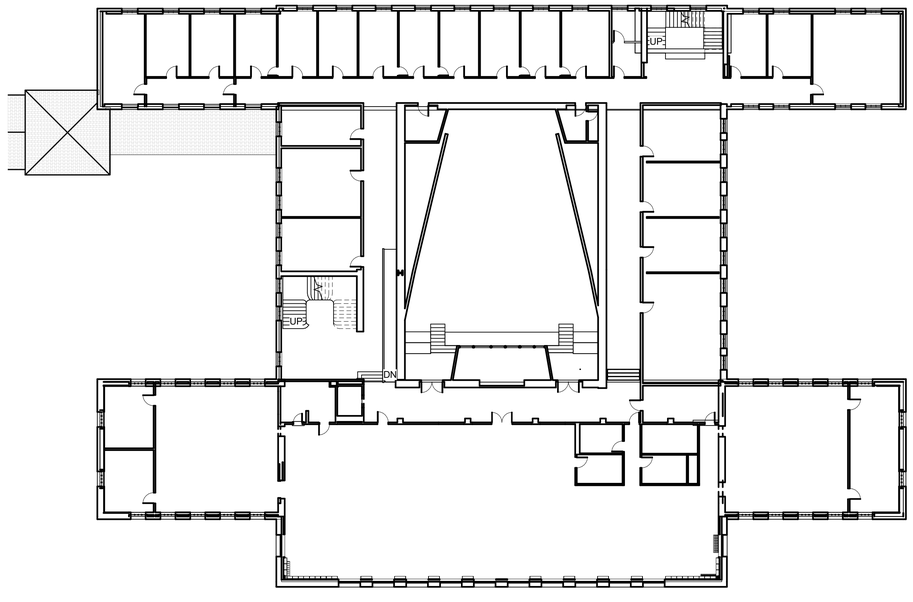

2 EXISTING SECOND FLOOR PLAN
1" = 20'-0"

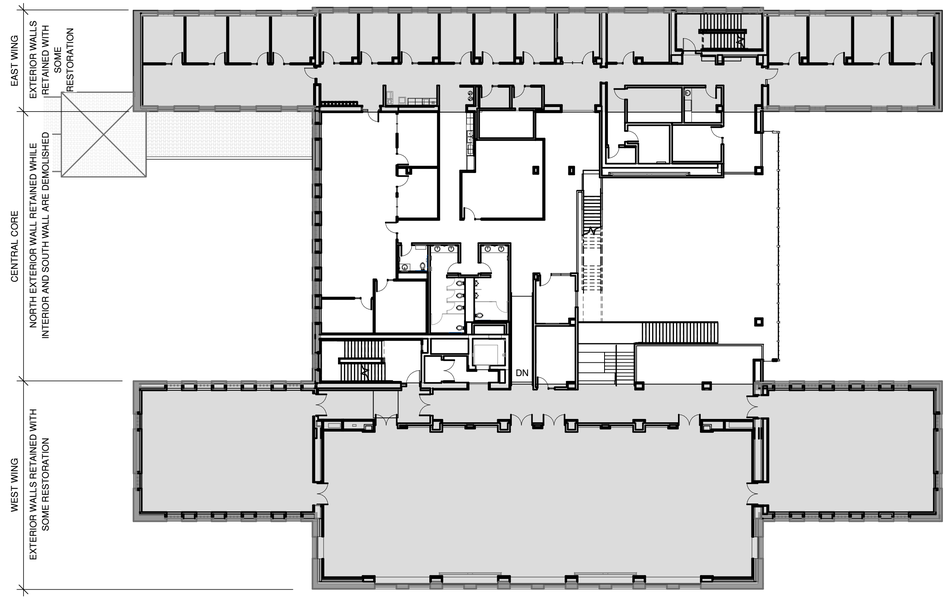

1 PROPOSED SECOND FLOOR PLAN
1" = 20'-0"

CAW ARCHITECTS
455 LAMBERT AVENUE PALO ALTO, CA 94306
WWW.CAWARCHITECTS.COM • 650.328.1818 • FAX: 650.328.1888

COPYRIGHT 2007 BY CAW ARCHITECTS, INC.

WILLIAM RAWN ASSOCIATES | Architects, Inc.
10 Post Office Sq.
Suite 1010
Boston, MA 02109

STAMP

LICENSED ARCHITECT
CHRISTOPHER SCOTT WAINEY
C-22197
REN. 04-30-12
STATE OF CALIFORNIA

CONSULTANTS

MILESTONE	DATE
ASA SUBMISSION	12/07/2020
ASA RESUBMISSION	08/20/2021

PROJECT NAME

NORTH BUILDING

GRADUATE SCHOOL OF EDUCATION

485 LASUEN MALL

STANFORD, CA 94305

SHEET TITLE

NB COMPARISON PLANS

PROJECT NO. 17013
DRAWN BY TK / AS
CHECKED BY MA

SHEET

NA0.6

8/19/2021 10:14:01 PM

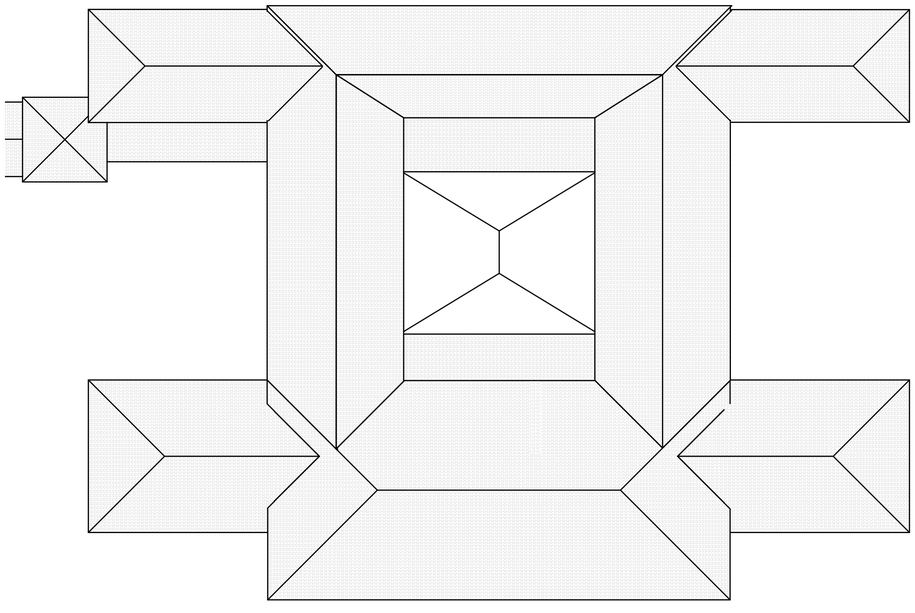

2 EXISTING ROOF PLAN
1" = 20'-0"

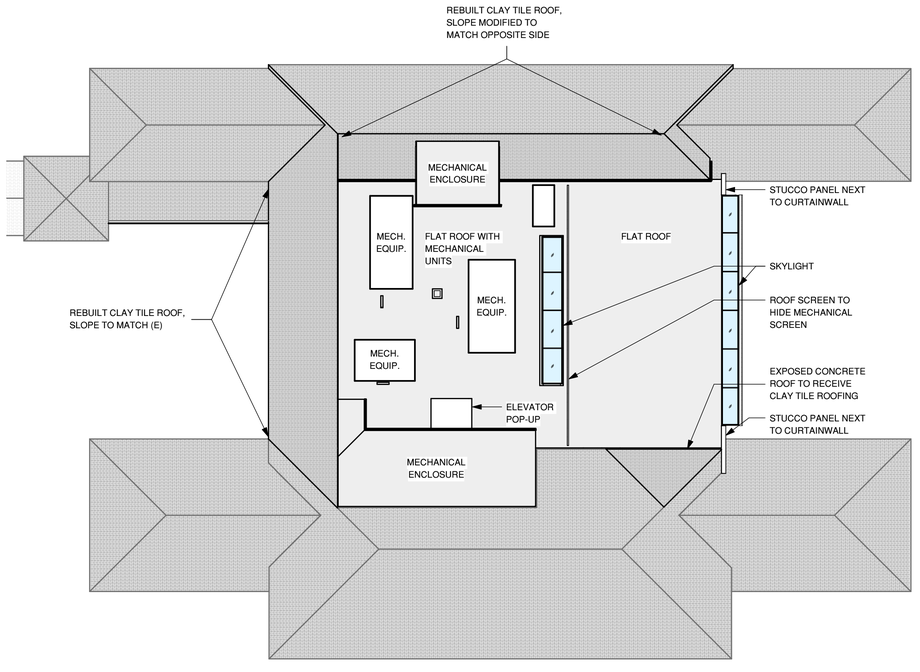

1 PROPOSED ROOF PLAN
1" = 20'-0"

CAW ARCHITECTS
455 LAMBERT AVENUE PALO ALTO, CA 94306
WWW.CAWARCHITECTS.COM • 650.328.1818 • FAX: 650.328.1888

COPYRIGHT 2017 BY CAW ARCHITECTS, INC.

WILLIAM RAWN ASSOCIATES | Architects, Inc.
10 Post Office Sq.
Suite 1010
Boston, MA 02109

STAMP



CONSULTANTS

MILESTONE	DATE
ASA SUBMISSION	12/07/2020
ASA RESUBMISSION	08/20/2021

PROJECT NAME

NORTH BUILDING

GRADUATE SCHOOL OF EDUCATION

485 LASUEN MALL

STANFORD, CA 94305

SHEET TITLE

NB COMPARISON PLANS

PROJECT NO. 17013
DRAWN BY TK / AS
CHECKED BY MA

SHEET

NA0.7

8/20/2021 9:19:35 AM

BARNUM FAMILY CENTER

	GUP	GROSS
SECOND FLOOR	2,076 SF	2,150 GSF
FIRST FLOOR	8,607 SF	8,711 GSF
BASEMENT	0 SF	453 GSF
TOTAL	10,683 SF	11,314 GSF

BARNUM FAMILY CENTER (PORTION TO BE DEMOLISHED)

	GUP	GROSS
SECOND FLOOR	2,076 SF	2,150 GSF
FIRST FLOOR	5,122 SF	8,711 GSF
BASEMENT	0 SF	453 GSF
TOTAL	7,198 SF	7,376 GSF

BARNUM FAMILY CENTER (PORTION TO REMAIN)

	GUP	GROSS
SECOND FLOOR	0 SF	0 GSF
FIRST FLOOR	3,485 SF	3,485 GSF
BASEMENT	0 SF	453 GSF
TOTAL	3,485 SF	3,938 GSF

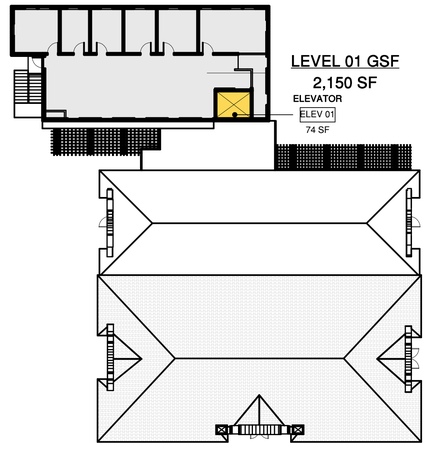

2,150 GSF
- 74 NON-GUP
2,076 GUP

3 SECOND FLOOR PLAN - EXISTING BARNUM
1" = 20'-0"

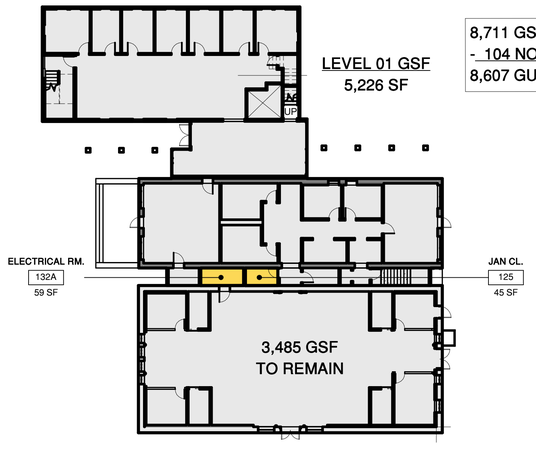

8,711 GSF
- 104 NON-GUP
8,607 GUP

2 FIRST FLOOR PLAN - EXISTING BARNUM
1" = 20'-0"



453 GSF
- 453 NON-GUP
0 GUP

1 BASEMENT - EXISTING BARNUM
1" = 20'-0"

TRUE NORTH
N

CAW ARCHITECTS
455 LAMBERT AVENUE PALO ALTO, CA 94306
WWW.CAWARCHITECTS.COM • 650.328.1818 • FAX: 650.328.1888

COPYRIGHT 2007 BY CAW ARCHITECTS, INC.

WILLIAM RAWN ASSOCIATES | Architects, Inc.
10 Post Office Sq.
Suite 1010
Boston, MA 02109

STAMP

LICENSED ARCHITECT
CHRISTOPHER SCOTT WAINEY
C-22197
REN. 04-30-12
STATE OF CALIFORNIA

CONSULTANTS

MILESTONE	DATE
ASA SUBMISSION	12/07/2020
ASA RESUBMISSION	08/20/2021

PROJECT NAME
SOUTH BUILDING
GRADUATE SCHOOL OF EDUCATION
505 & 507 LASUEN MALL
STANFORD, CA 94305

SHEET TITLE
BARNUM GUP ANALYSIS - EXISTING

PROJECT NO. 17013
DRAWN BY TK / AE
CHECKED BY MG / MA

SHEET
SA0.1

8/19/2021 9:14:37 PM

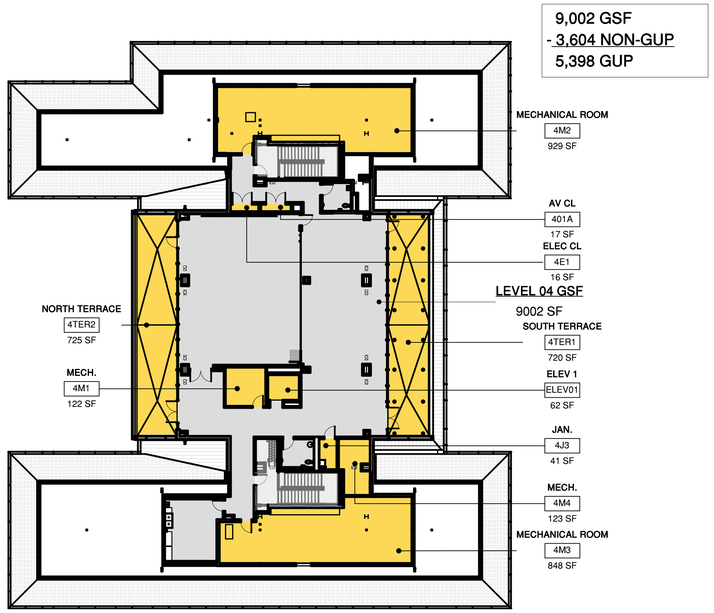

5 PROPOSED FOURTH FLOOR
1" = 20'-0"

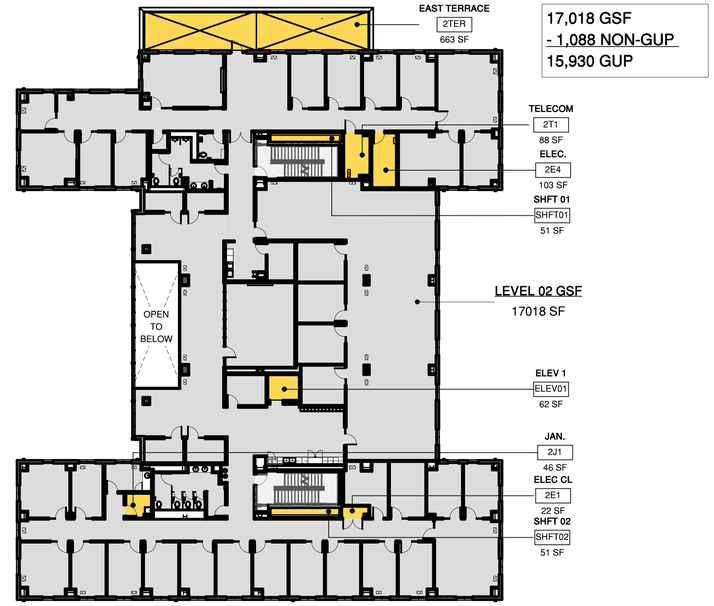

3 PROPOSED SECOND FLOOR
1" = 20'-0"

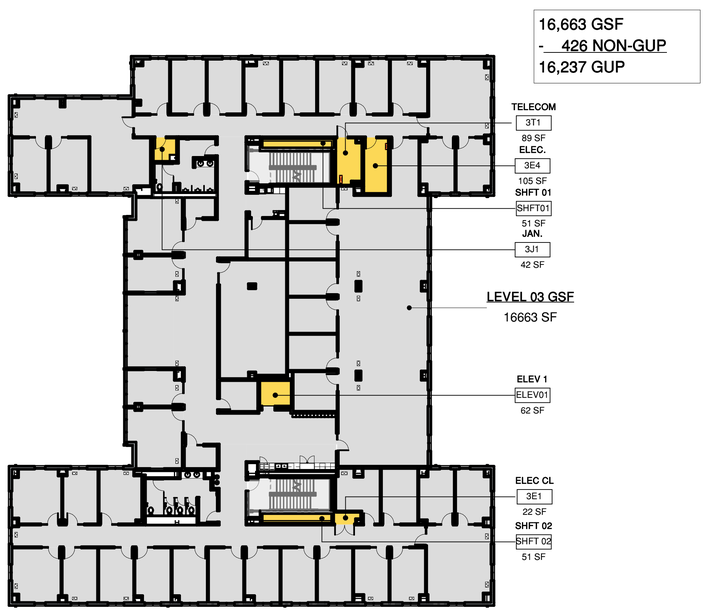

4 PROPOSED THIRD FLOOR
1" = 20'-0"

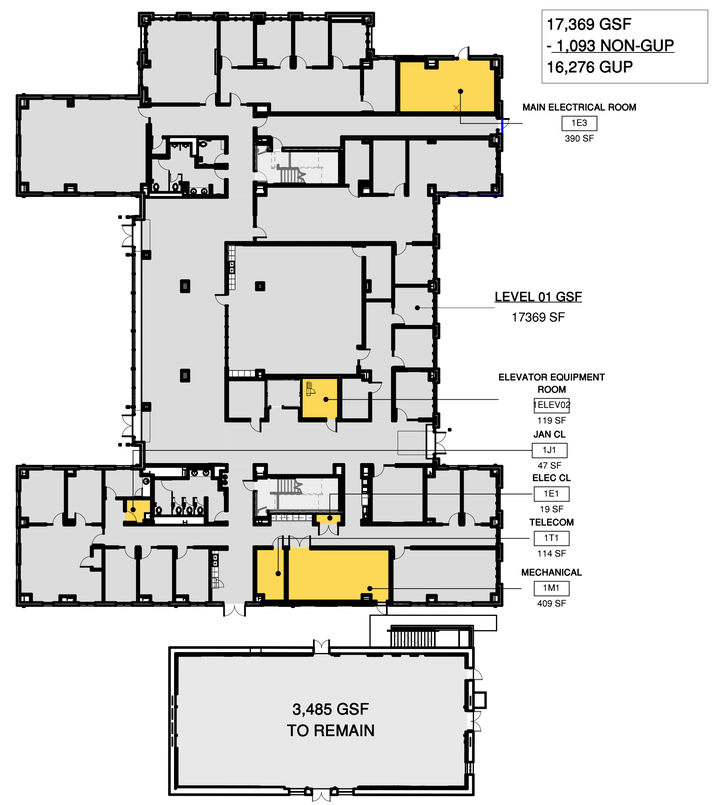

2 PROPOSED FIRST FLOOR
1" = 20'-0"

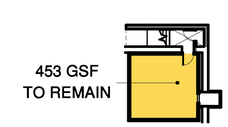

1 PROPOSED BASEMENT
1" = 20'-0"

TRUE NORTH
N

SOUTH BUILDING

	GUP	GROSS
FOURTH FLOOR	5,398 SF	9,002 GSF
THIRD FLOOR	16,237 SF	16,663 GSF
SECOND FLOOR	15,930 SF	17,018 GSF
FIRST FLOOR	16,276 SF	17,369 GSF
TOTAL	53,841 SF	60,052 GSF

BARNUM FAMILY CENTER

	GUP	GROSS
FIRST FLOOR	3,485 SF	3,485 GSF
BASEMENT FLOOR	0 SF	453 GSF
TOTAL	3,485 SF	3,938 GSF

CAW ARCHITECTS
455 LAMBERT AVENUE PALO ALTO, CA 94306
WWW.CAWARCHITECTS.COM • 650.328.1818 • FAX: 650.328.1888

COPYRIGHT 2007 BY CAW ARCHITECTS, INC.

WILLIAM RAWN ASSOCIATES | Architects, Inc.
10 Post Office Sq.
Suite 1010
Boston, MA 02109

STAMP

LICENSED ARCHITECT
CHRISTOPHER SCOTT WAINEY
C-22197
RAN 04-30-22
STATE OF CALIFORNIA

CONSULTANTS

MILESTONE	DATE
ASA SUBMISSION	12/07/2020
ASA RESUBMISSION	08/20/2021

PROJECT NAME
SOUTH BUILDING
GRADUATE SCHOOL OF EDUCATION
505 & 507 LASUEN MALL
STANFORD, CA 94305

SHEET TITLE
SB AND BARNUM GUP ANALYSIS - PROPOSED

PROJECT NO. 17013
DRAWN BY TK / AE
CHECKED BY MG / MA

SHEET
SA0.2

8/19/2021 9:14:51 PM

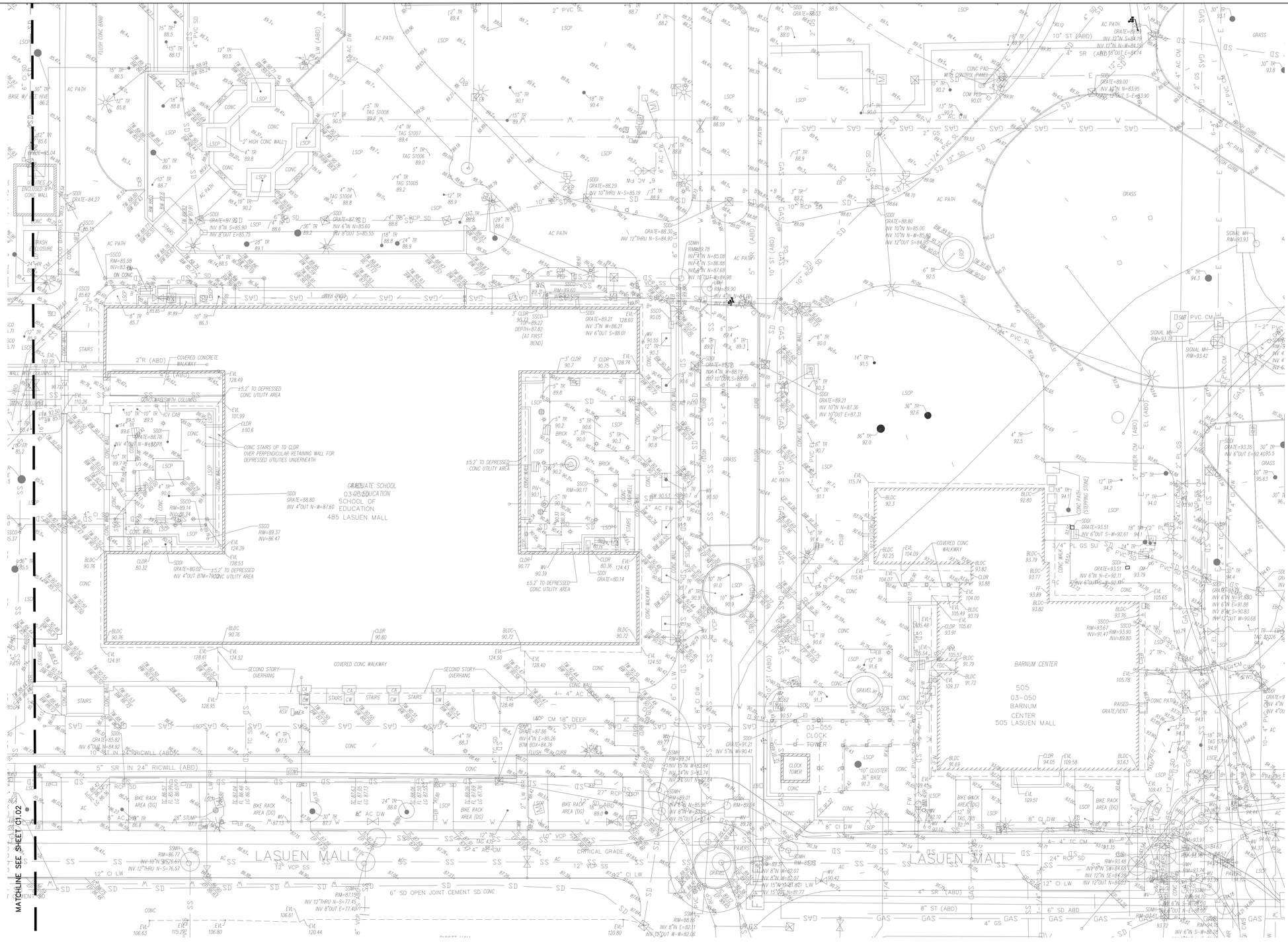

CAW ARCHITECTS
455 LAMBERT AVENUE PALO ALTO, CA 94306
WWW.CAWARCHITECTS.COM • 650.328.1818 • FAX: 650.328.1888

COPYRIGHT 2017 BY CAW ARCHITECTS, INC.

WILLIAM RAWN ASSOCIATES | Architects, Inc.
10 Post Office Sq.
Suite 1010
Boston, MA 02109

STAMP

REGISTERED PROFESSIONAL ENGINEER STEVEN REYNOLDS C 77988 CIVIL STATE OF CALIFORNIA

CONSULTANTS

BKF ENGINEERS
4670 WILLOW ROAD
SUITE 250
PLEASANTON, CA 94588
(925) 396-7700
www.bkf.com

MILESTONE	DATE
ASA SUBMISSION	12/7/2020
ASA RESUBMITTAL	8/20/2021

PROJECT NAME

STANFORD UNIVERSITY
GRADUATE SCHOOL OF EDUCATION
485 & 505 LASUEN MALL
STANFORD, CA 94305

SHEET TITLE

EXISTING CONDITIONS

PROJECT NO. 14029
DRAWN BY SR, NB
CHECKED BY JL

SHEET

C1.01

7/6/19 5:39:03 PM

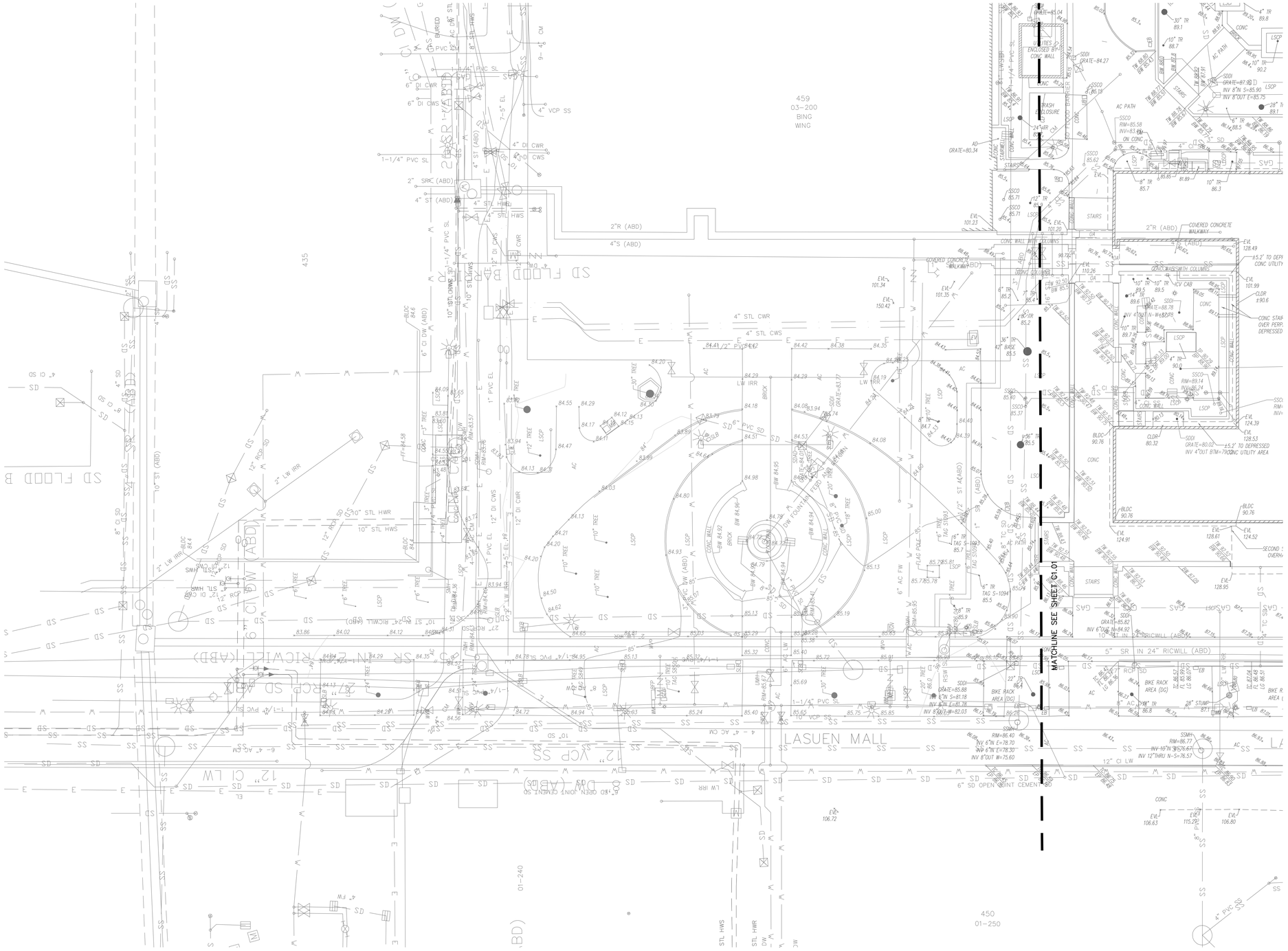

CAW ARCHITECTS
455 LAMBERT AVENUE PALO ALTO, CA 94306
WWW.CAWARCHITECTS.COM • 650.328.1818 • FAX: 650.328.1888

COPYRIGHT 2007 BY CAW ARCHITECTS, INC.

WILLIAM RAWN ASSOCIATES | Architects, Inc.
10 Post Office Sq.
Suite 1010
Boston, MA 02109

STAMP

REGISTERED PROFESSIONAL ENGINEER
STEVEN REYNOLDS
C 77988
CIVIL
STATE OF CALIFORNIA

CONSULTANTS

BKF ENGINEERS
4670 WILLOW ROAD
SUITE 250
PLEASANTON, CA 94588
(925) 396-7700
www.bkf.com

MILESTONE	DATE
ASA SUBMISSION	12/7/2020
ASA RESUBMITTAL	8/20/2021

PROJECT NAME

STANFORD UNIVERSITY
GRADUATE SCHOOL OF EDUCATION
485 & 505 LASUEN MALL
STANFORD, CA 94305

SHEET TITLE

EXISTING CONDITIONS

PROJECT NO. 14029
DRAWN BY SR, NB
CHECKED BY JL

SHEET

C1.02

7/6/19 5:39:03 PM

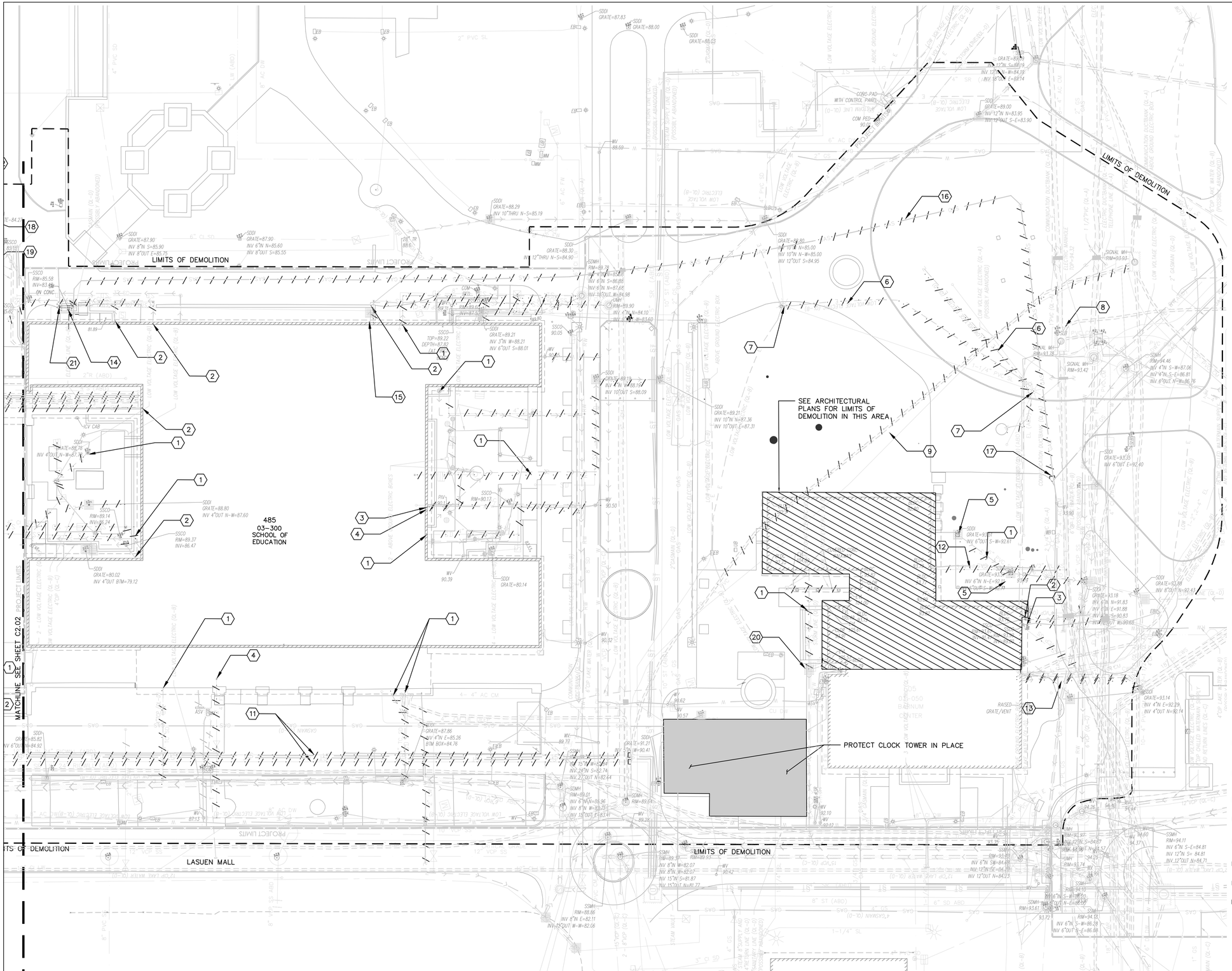

LEGEND

- REMOVE EXISTING UTILITY
- CAP AND ABANDON EXISTING UTILITY
- LIMITS OF DEMOLITION
- SEE ARCHITECTURAL PLANS FOR LIMITS OF DEMOLITION IN THIS AREA

GENERAL NOTES

1. PROVIDE TREE PROTECTION FOR ALL TREES TO REMAIN. ALL TREES ARE TO REMAIN UNLESS OTHERWISE NOTED ON PLANS.
2. EXISTING UTILITIES SHOWN ARE BASED ON RECORD INFORMATION. CONTRACTOR SHALL VERIFY ALL EXISTING UTILITIES PRIOR TO STARTING CONSTRUCTION.
3. IRRIGATION PIPING, STRUCTURES AND/OR EQUIPMENT THAT IS DAMAGED DURING CONSTRUCTION SHALL BE REPLACED IN KIND.
4. SITE DEMOLITION LIMITS DO NOT INCLUDE ALL UTILITY TRENCHING AND PATCHING. SEE SITE UTILITY PLAN FOR LIMITS OF UTILITY WORK.
5. ALL UTILITY STRUCTURES THAT ARE NOT IDENTIFIED FOR REMOVAL SHALL REMAIN AND BE PROTECTED.
6. ALL TREES THAT ARE NOT IDENTIFIED FOR REMOVAL SHALL REMAIN AND BE PROTECTED
7. REROUTE EXISTING STREETLIGHT ELECTRICAL LINES TO STREETLIGHT 2A-31 AND KIOSK 2A-K4 PRIOR TO REMOVING STREET LIGHT 2A-29 AND 2A-30.

DEMOLITION NOTES

1. REMOVE EXISTING STORM DRAIN PIPE
2. REMOVE EXISTING SANITARY SEWER PIPE
3. REMOVE EXISTING DOMESTIC WATER SERVICE
4. REMOVE EXISTING FIRE WATER SERVICE
5. REMOVE AREA DRAIN
6. REMOVE EXISTING ELECTRICAL SERVICE
7. REMOVE EXISTING STREET LIGHT
8. EXISTING VAULT TO REMAIN, PROTECT IN PLACE
9. TELECOM DUCT BANK TO BE REMOVED. SEE TELECOM PLANS FOR DETAILS.
10. REMOVE EXISTING STEAM VAULT
11. REMOVE EXISTING STEAM PIPES IN 24" RICWILL
12. REMOVE 3" GAS LATERAL. CUT AND CAP AT VALVE
13. REMOVE EXISTING 4" CW LATERALS. CUT AND CAP AT VALVES
14. PG&E TO REMOVE EXISTING GAS METER AND CAP EXISTING PIPE. CONTRACTOR TO REMOVE EXISTING BOLLARDS.
15. RAISE EXISTING STORM STRUCTURE RIM TO FINISH GRADE BELOW FUTURE WINDOW SILL.
16. CONTRACTOR TO REMOVE EXISTING GAS PIPE. COORDINATE WORK AND TIMING WITH PG&E SHUTDOWN AND REMOVAL OF GAS METER.
17. PG&E TO CUT AND CAP EXISTING GAS PIPE
18. DEMOLISH AND REMOVE EXISTING ENCLOSURE AND ENCLOSURE UTILITIES
19. DEMOLISH AND REMOVE EXISTING TRASH ENCLOSURE
20. REMOVE AND REPLACE AREA DRAIN. SEE UTILITY PLAN
21. CAP AND ABANDON EXISTING GAS PIPE
22. EXISTING UTILITY TO REMAIN. PROTECT IN PLACE

GRAPHIC SCALE

20 0 10 20 40 80

(IN FEET)
1 inch = 20 ft.

CAW ARCHITECTS
455 LAMBERT AVENUE PALO ALTO, CA 94306
WWW.CAWARCHITECTS.COM • 650.328.1818 • FAX: 650.328.1888

COPYRIGHT 2017 BY CAW ARCHITECTS, INC.

WILLIAM RAWN ASSOCIATES | Architects, Inc.
10 Post Office Sq.
Suite 1010
Boston, MA 02109

STAMP

REGISTERED PROFESSIONAL ENGINEER STEVEN REYNOLDS C 77588 CIVIL STATE OF CALIFORNIA

CONSULTANTS

BKF ENGINEERS
4670 WILLOW ROAD
SUITE 250
PLEASANTON, CA 94588
(925) 396-7700
www.bkf.com

MILESTONE	DATE
ASA SUBMISSION	12/7/2020
ASA RESUBMITTAL	8/20/2021

PROJECT NAME

STANFORD UNIVERSITY
GRADUATE SCHOOL OF EDUCATION
485 & 505 LASUEN MALL
STANFORD, CA 94305

SHEET TITLE

SITE UTILITY DEMOLITION PLAN

PROJECT NO. 14029
DRAWN BY SR, NB
CHECKED BY JL

SHEET C2.01

7/6/19 5:39:03 PM

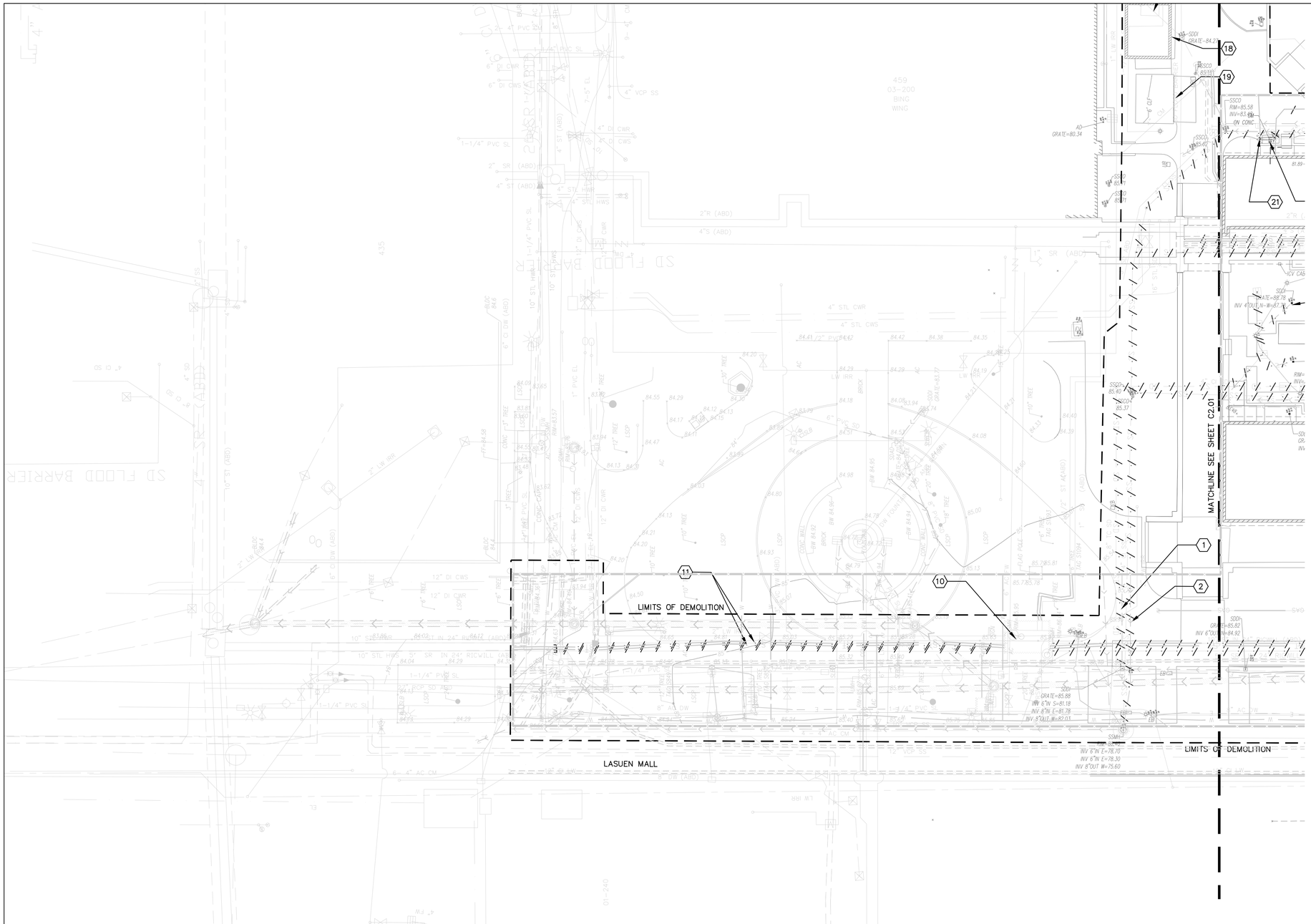

LEGEND

- REMOVE EXISTING UTILITY
- CAP AND ABANDON EXISTING UTILITY
- LIMITS OF DEMOLITION
- SEE ARCHITECTURAL PLANS FOR LIMITS OF DEMOLITION IN THIS AREA

GENERAL NOTES

1. PROVIDE TREE PROTECTION FOR ALL TREES TO REMAIN. ALL TREES ARE TO REMAIN UNLESS OTHERWISE NOTED ON PLANS.
2. EXISTING UTILITIES SHOWN ARE BASED ON RECORD INFORMATION. CONTRACTOR SHALL VERIFY ALL EXISTING UTILITIES PRIOR TO STARTING CONSTRUCTION.
3. IRRIGATION PIPING, STRUCTURES AND/OR EQUIPMENT THAT IS DAMAGED DURING CONSTRUCTION SHALL BE REPLACED IN KIND.
4. SITE DEMOLITION LIMITS DO NOT INCLUDE ALL UTILITY TRENCHING AND PATCHING. SEE SITE UTILITY PLAN FOR LIMITS OF UTILITY WORK.
5. ALL UTILITY STRUCTURES THAT ARE NOT IDENTIFIED FOR REMOVAL SHALL REMAIN AND BE PROTECTED.
6. ALL TREES THAT ARE NOT IDENTIFIED FOR REMOVAL SHALL REMAIN AND BE PROTECTED
7. REROUTE EXISTING STREETLIGHT ELECTRICAL LINES TO STREETLIGHT 2A-31 AND KIOSK 2A-K4 PRIOR TO REMOVING STREET LIGHT 2A-29 AND 2A-30.

DEMOLITION NOTES

1. REMOVE EXISTING STORM DRAIN PIPE
2. REMOVE EXISTING SANITARY SEWER PIPE
3. REMOVE EXISTING DOMESTIC WATER SERVICE
4. REMOVE EXISTING FIRE WATER SERVICE
5. REMOVE AREA DRAIN
6. REMOVE EXISTING ELECTRICAL SERVICE
7. REMOVE EXISTING STREET LIGHT
8. EXISTING VAULT TO REMAIN, PROTECT IN PLACE
9. TELECOM DUCT BANK TO BE REMOVED. SEE TELECOM PLANS FOR DETAILS.
10. REMOVE EXISTING STEAM VAULT
11. REMOVE EXISTING STEAM PIPES IN 24" RICWILL
12. REMOVE ¾" GAS LATERAL. CUT AND CAP AT VALVE
13. REMOVE EXISTING 4" CW LATERALS. CUT AND CAP AT VALVES
14. PG&E TO REMOVE EXISTING GAS METER AND CAP EXISTING PIPE. CONTRACTOR TO REMOVE EXISTING BOLLARDS.
15. RAISE EXISTING STORM STRUCTURE RIM TO FINISH GRADE BELOW FUTURE WINDOW SILL.
16. CONTRACTOR TO REMOVE EXISTING GAS PIPE. COORDINATE WORK AND TIMING WITH PG&E SHUTDOWN AND REMOVAL OF GAS METER.
17. PG&E TO CUT AND CAP EXISTING GAS PIPE
18. DEMOLISH AND REMOVE EXISTING ENCLOSURE AND ENCLOSURE UTILITIES
19. DEMOLISH AND REMOVE EXISTING TRASH ENCLOSURE
20. REMOVE AND REPLACE AREA DRAIN. SEE UTILITY PLAN
21. CAP AND ABANDON EXISTING GAS PIPE
22. EXISTING UTILITY TO REMAIN. PROTECT IN PLACE

GRAPHIC SCALE

20 0 10 20 40 80

(IN FEET)
1 inch = 20 ft.

CAW ARCHITECTS
455 LAMBERT AVENUE PALO ALTO, CA 94306
WWW.CAWARCHITECTS.COM • 650.328.1818 • FAX: 650.328.1888

COPYRIGHT 2017 BY CAW ARCHITECTS, INC.

WILLIAM RAWN ASSOCIATES | Architects, Inc.
10 Post Office Sq.
Suite 1010
Boston, MA 02109

STAMP

REGISTERED PROFESSIONAL ENGINEER STEVEN REYNOLDS C 77988 CIVIL STATE OF CALIFORNIA

CONSULTANTS

BKF ENGINEERS
4670 WILLOW ROAD
SUITE 250
PLEASANTON, CA 94588
(925) 396-7700
www.bkf.com

MILESTONE	DATE
ASA SUBMISSION	12/7/2020
ASA RESUBMITTAL	8/20/2021

PROJECT NAME

STANFORD UNIVERSITY
GRADUATE SCHOOL OF EDUCATION
485 & 505 LASUEN MALL
STANFORD, CA 94305

SHEET TITLE

SITE UTILITY DEMOLITION PLAN

PROJECT NO. 14029
DRAWN BY SR, NB
CHECKED BY JL

SHEET

C2.02

7/6/19 5:39:03 PM

LEGEND

DW	DOMESTIC WATER	RW	RECLAIMED WATER
FW	FIRE WATER	PP	PERFORATED PIPE
SS	SANITARY SEWER	GAS	GAS
CW	CHILLED WATER SERVICE AND RETURN	E	ELECTRICAL
HW	HOT WATER SERVICE AND RETURN	COMM	TELECOMMUNICATION
LW	LAKE WATER IRRIGATION		LIMIT OF WORK
CO	CLEANOUT (3 C10.01) (4 C10.01)		PROPOSED PARCEL BOUNDARY
	REDUCED PRESSURE PRINCIPAL BACKFLOW (4 C10.01)		SLOT DRAIN (1 L8.01)
	DOUBLE CHECK DETECTOR BACKFLOW (6 C10.01)		STORM DRAIN MANHOLE (5 C10.01)
FDC	FIRE DEPARTMENT CONNECTION (6 C10.01)		REDUCED PRESSURE BACKFLOW (4 C10.01)
FH	FIRE HYDRANT (1 C10.01)	WV	WATER VALVE
WM	WATER METER (3 C10.01)		PROPOSED AREA DRAIN (2 C10.01)
	POINT OF CONNECTION		

GENERAL NOTES

1. PVC C900 DOMESTIC AND FIRE WATER PIPES SHALL BE DUCTILE IRON RETRAINED JOINTS.
2. DOMESTIC WATER, FIRE WATER, CHILLED WATER, AND LAKE WATER SYSTEMS SHALL HAVE CATHODIC PROTECTION PER STANFORD STANDARD DETAILS AND SPEC SECTION 13 47 13.
3. MAINTAIN 5 FT MINIMUM HORIZONTAL SEPARATION BETWEEN PROPOSED DW (POTABLE) AND PROPOSED CW (NON POTABLE) PIPES. NEW DW PIPES NEED TO HAVE A MINIMUM HORIZONTAL SEPARATION OF 10 FT FROM SANITARY SEWER PIPES.
4. PROVIDE CATHODIC PROTECTION FOR ALL DW METAL PIPING AND FITTINGS.

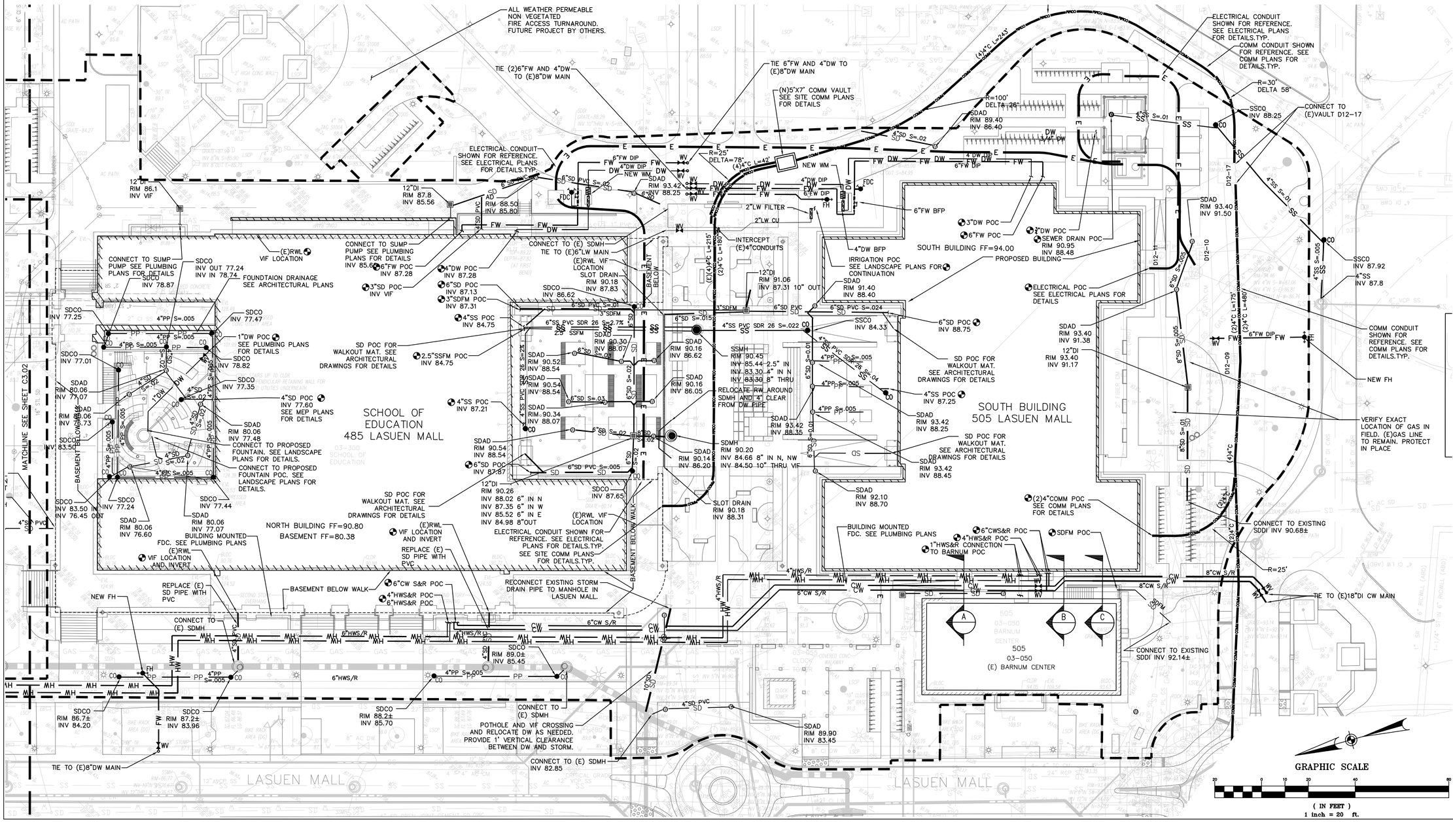

CAW ARCHITECTS
455 LAMBERT AVENUE PALO ALTO, CA 94306
WWW.CAWARCHITECTS.COM • 650.328.1818 • FAX: 650.328.1888

COPYRIGHT 2017 BY CAW ARCHITECTS, INC.

WILLIAM RAWN ASSOCIATES | Architects, Inc.
10 Post Office Sq.
Suite 1010
Boston, MA 02109

STAMP

REGISTERED PROFESSIONAL ENGINEER STEVEN REYNOLDS C 77988 CIVIL STATE OF CALIFORNIA

CONSULTANTS

BKF ENGINEERS
4670 WILLOW ROAD
SUITE 250
PLEASANTON, CA 94588
(925) 396-7700
www.bkf.com

MILESTONE	DATE
ASA SUBMISSION	12/7/2020
ASA RESUBMITTAL	8/20/2021

PROJECT NAME

STANFORD UNIVERSITY

GRADUATE SCHOOL OF EDUCATION

485 & 505 LASUEN MALL

STANFORD, CA 94305

SHEET TITLE

PROPOSED UTILITY PLAN

PROJECT NO. 14029
DRAWN BY SR, NB
CHECKED BY JL

SHEET

C3.01

7/6/19 5:39:03 PM

LEGEND

DW	DOMESTIC WATER	RW	RECLAIMED WATER
FW	FIRE WATER	PP	PERFORATED PIPE
SS	SANITARY SEWER	GAS	GAS
CW	CHILLED WATER SERVICE AND RETURN	E	ELECTRICAL
MH MH	HOT WATER SERVICE AND RETURN	COMM	TELECOMMUNICATION
LW	LAKE WATER IRRIGATION		LIMIT OF WORK
CO	CLEANOUT (3 C10.00) (4 C10.01)		PROPOSED PARCEL BOUNDARY
	REDUCED PRESSURE PRINCIPAL BACKFLOW (4 C10.00)		SLOT DRAIN (1 LB.01)
	DOUBLE CHECK DETECTOR BACKFLOW (6 C10.00)		STORM DRAIN MANHOLE (5 C10.01)
FDC	FIRE DEPARTMENT CONNECTION (6 C10.00)		REDUCED PRESSURE BACKFLOW (4 C10.00)
FH	FIRE HYDRANT (1 C10.01)	WV	WATER VALVE
WM	WATER METER (3 C10.00)		PROPOSED AREA DRAIN (2 C10.02)
	POINT OF CONNECTION		

GENERAL NOTES

1. PVC C900 DOMESTIC AND FIRE WATER PIPES SHALL BE DUCTILE IRON RETRAINED JOINTS.
2. DOMESTIC WATER, FIRE WATER, CHILLED WATER, AND LAKE WATER SYSTEMS SHALL HAVE CATHODIC PROTECTION PER STANFORD STANDARD DETAILS AND SPEC SECTION 13 47 13.
3. MAINTAIN 5 FT MINIMUM HORIZONTAL SEPARATION BETWEEN PROPOSED DW (POTABLE) AND PROPOSED CW (NON POTABLE) PIPES. NEW DW PIPES NEED TO HAVE A MINIMUM HORIZONTAL SEPARATION OF 10 FT FROM SANITARY SEWER PIPES.
4. PROVIDE CATHODIC PROTECTION FOR ALL DW METAL PIPING AND FITTINGS.

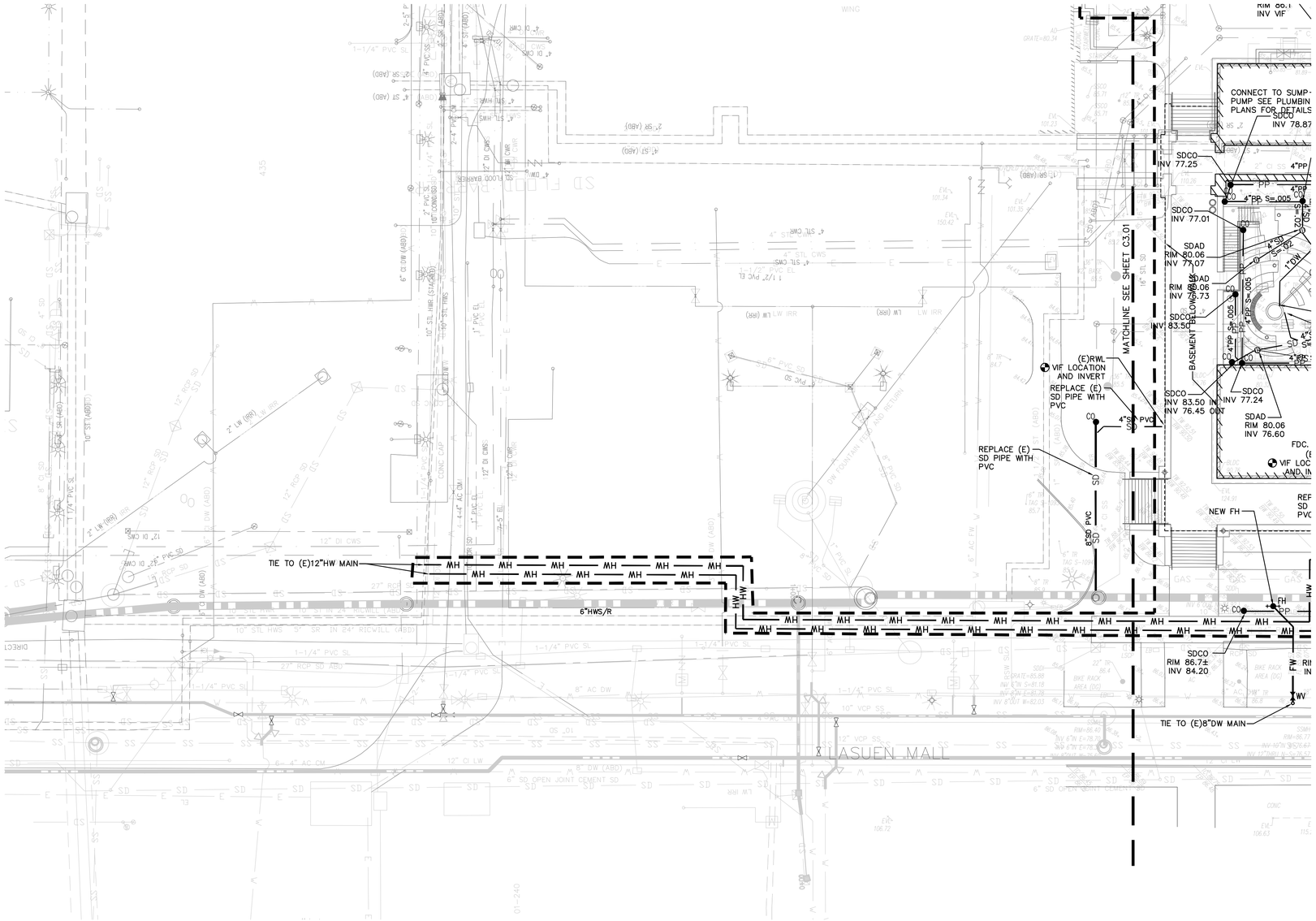

GRAPHIC SCALE

20 0 10 20 40 80

(IN FEET)
1 inch = 20 ft.

CAW ARCHITECTS
455 LAMBERT AVENUE PALO ALTO, CA 94306
WWW.CAWARCHITECTS.COM • 650.328.1818 • FAX: 650.328.1888

COPYRIGHT 2017 BY CAW ARCHITECTS, INC.

WILLIAM RAWN ASSOCIATES | Architects, Inc.
10 Post Office Sq.
Suite 1010
Boston, MA 02109

STAMP

REGISTERED PROFESSIONAL ENGINEER STEVEN REYNOLDS C 77988 CIVIL STATE OF CALIFORNIA

CONSULTANTS

BKF ENGINEERS
4670 WILLOW ROAD
SUITE 250
PLEASANTON, CA 94588
(925) 396-7700
www.bkf.com

MILESTONE	DATE
ASA SUBMISSION	12/7/2020
ASA RESUBMITTAL	8/20/2021

PROJECT NAME

STANFORD UNIVERSITY
GRADUATE SCHOOL OF EDUCATION
485 & 505 LASUEN MALL
STANFORD, CA 94305

SHEET TITLE

PROPOSED UTILITY PLAN

PROJECT NO. 14029
DRAWN BY SR, NB
CHECKED BY JL

SHEET

C3.02

7/6/19 5:39:03 PM

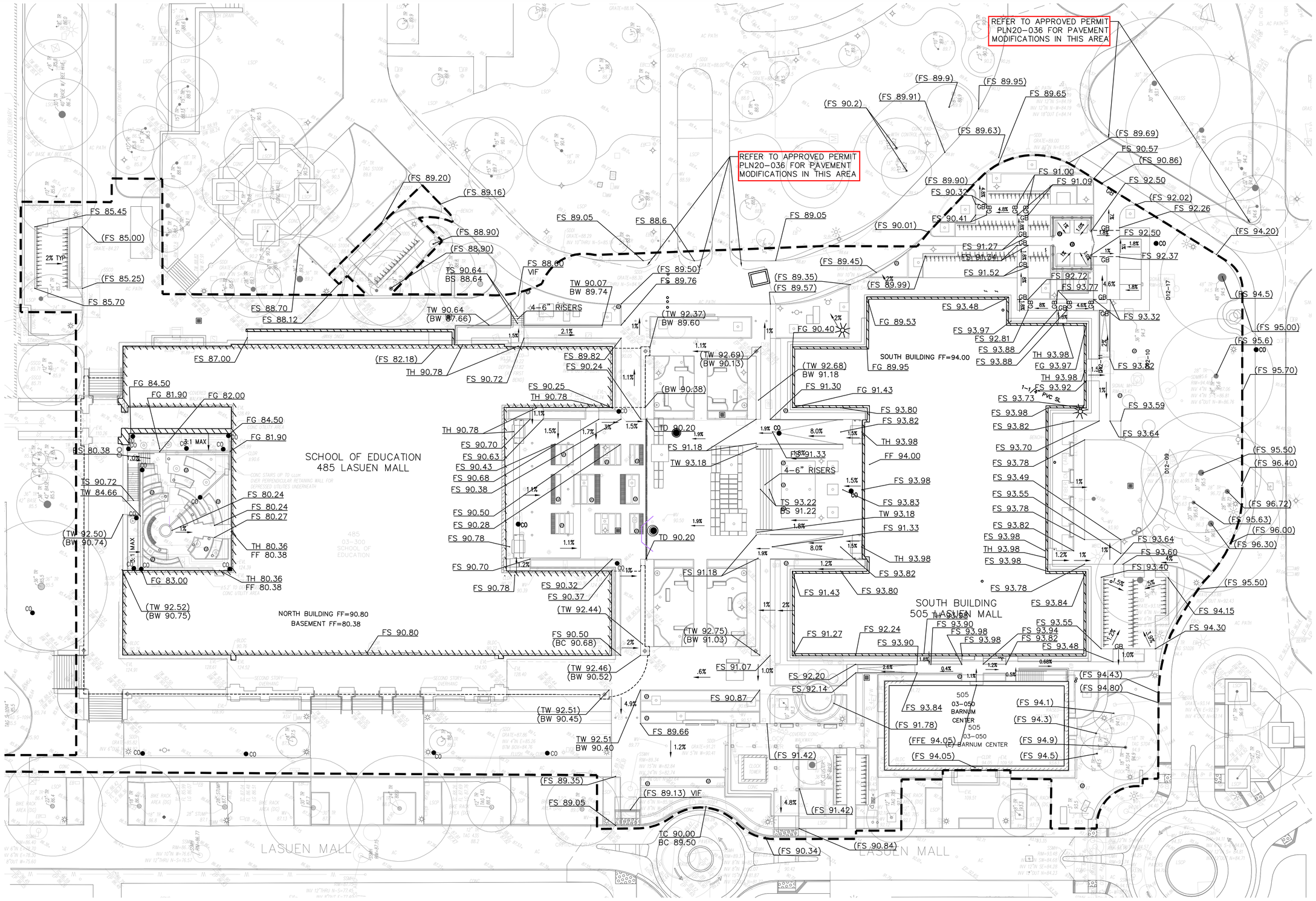

CAW ARCHITECTS
455 LAMBERT AVENUE PALO ALTO, CA 94306
WWW.CAWARCHITECTS.COM • 650.328.1818 • FAX: 650.328.1888

COPYRIGHT 2017 BY CAW ARCHITECTS, INC.

WILLIAM RAWN ASSOCIATES | Architects, Inc.
10 Post Office Sq.
Suite 1010
Boston, MA 02109

STAMP

REGISTERED PROFESSIONAL ENGINEER STEVEN REYNOLDS C 77988 CIVIL STATE OF CALIFORNIA

CONSULTANTS

BKF ENGINEERS
4670 WILLOW ROAD
SUITE 250
PLEASANTON, CA 94588
(925) 396-7700
www.bkf.com

MILESTONE	DATE
ASA SUBMISSION	12/7/2020
ASA RESUBMITTAL	8/20/2021

PROJECT NAME

STANFORD UNIVERSITY
GRADUATE SCHOOL OF EDUCATION
485 & 505 LASUEN MALL
STANFORD, CA 94305

SHEET TITLE

PROPOSED GRADING PLAN

PROJECT NO. 14029
DRAWN BY SR, NB
CHECKED BY JL

SHEET

C4.01

7/6/19 5:39:03 PM

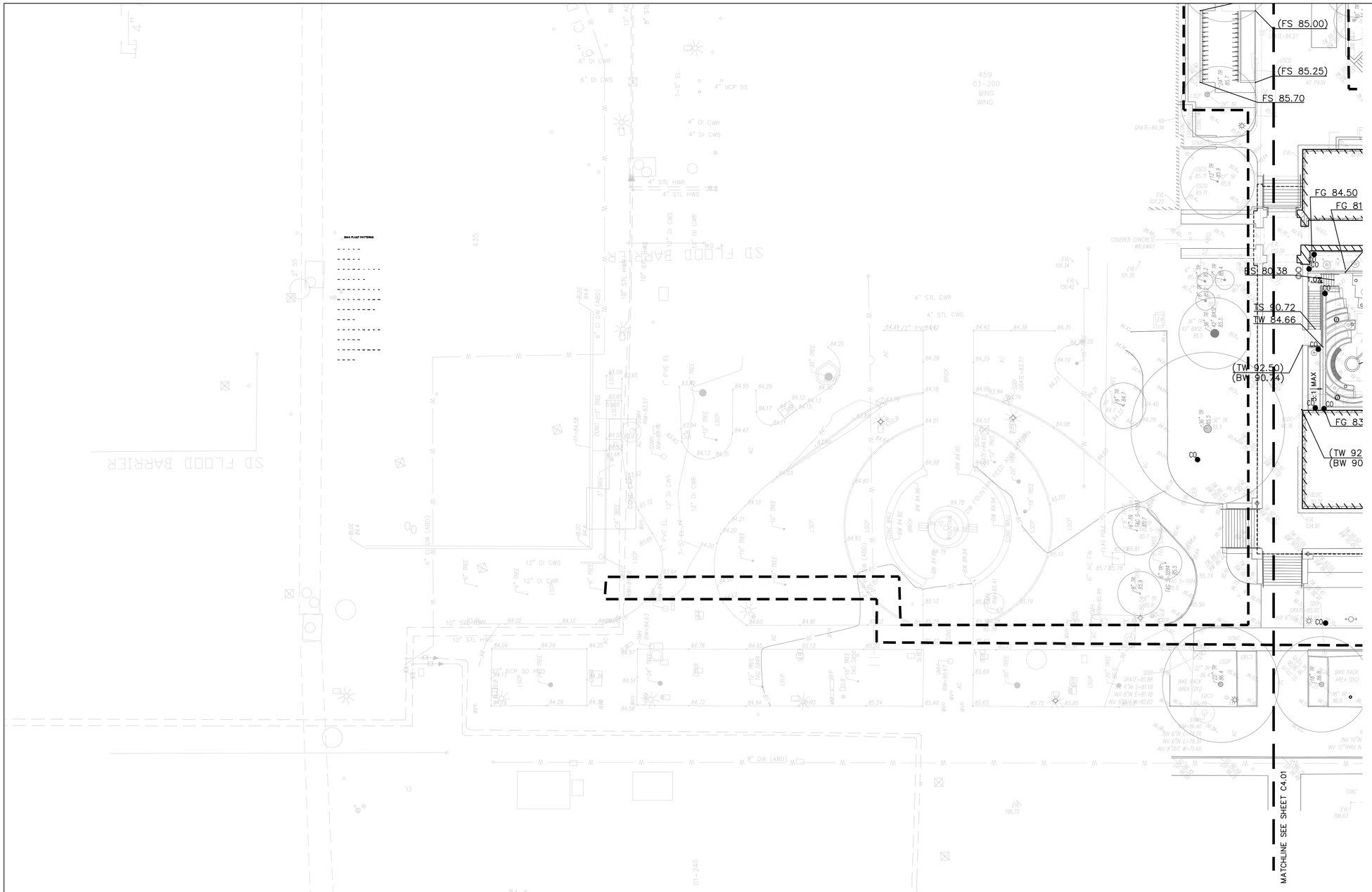

GRAPHIC SCALE

20 0 10 20 40 80

(IN FEET)
1 inch = 20 ft.

CAW ARCHITECTS
455 LAMBERT AVENUE PALO ALTO, CA 94306
WWW.CAWARCHITECTS.COM • 650.328.1818 • FAX: 650.328.1888

COPYRIGHT 2017 BY CAW ARCHITECTS, INC.

WILLIAM RAWN ASSOCIATES | Architects, Inc.
10 Post Office Sq.
Suite 1010
Boston, MA 02109

STAMP

REGISTERED PROFESSIONAL ENGINEER
STEVEN REYNOLDS
C 77988
CIVIL
STATE OF CALIFORNIA

CONSULTANTS

BKF ENGINEERS
4670 WILLOW ROAD
SUITE 250
PLEASANTON, CA 94588
(925) 396-7700
www.bkf.com

MILESTONE	DATE
ASA SUBMISSION	12/7/2020
ASA RESUBMITTAL	8/20/2021

PROJECT NAME
STANFORD UNIVERSITY
GRADUATE SCHOOL OF EDUCATION
485 & 505 LASUEN MALL
STANFORD, CA 94305

SHEET TITLE
PROPOSED SITE DESIGN

PROJECT NO. 14029
DRAWN BY SR, NB
CHECKED BY JL

SHEET
C4.02

7/6/19 5:39:03 PM

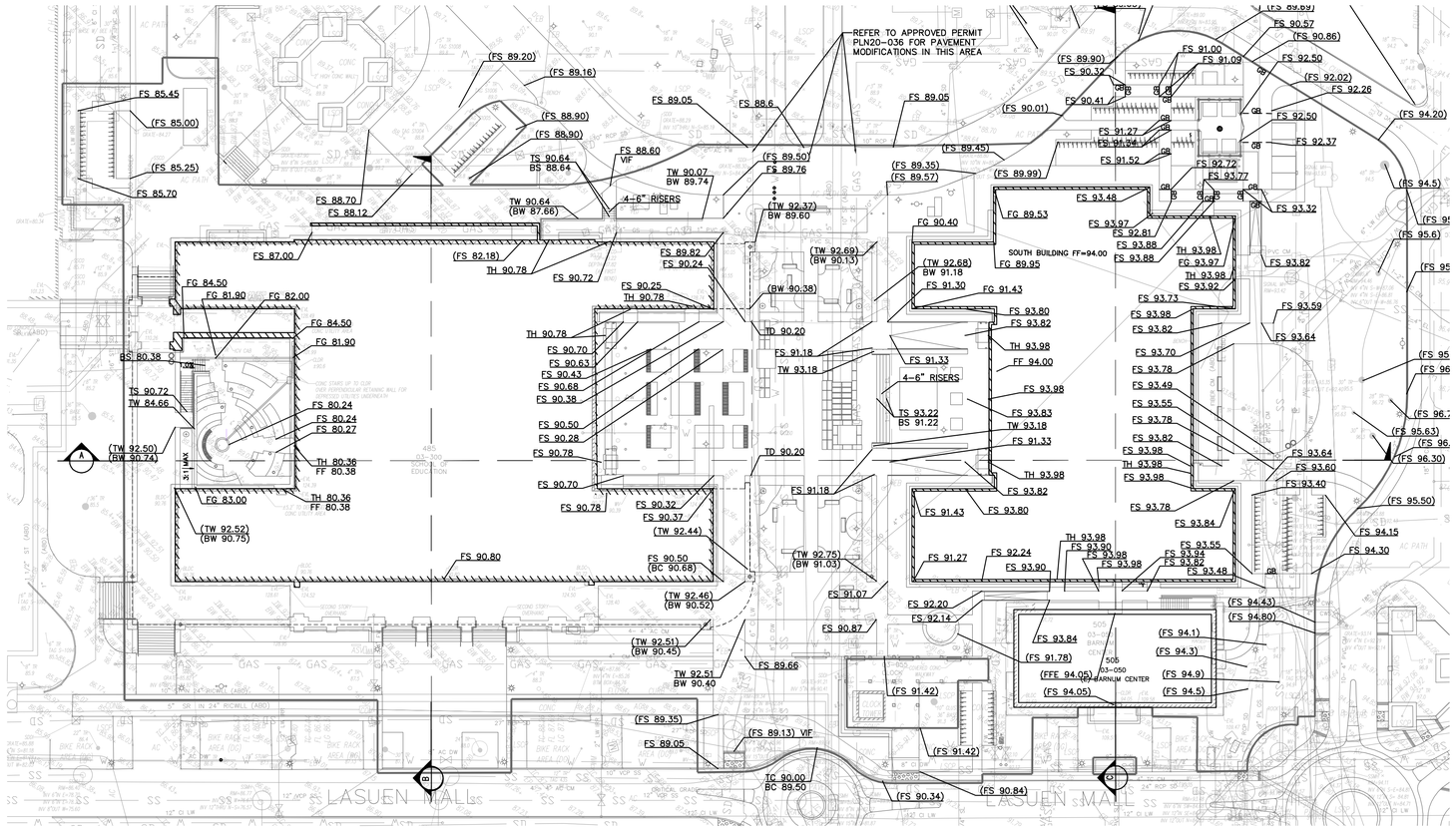

LEGEND

- PROPOSED BUILDING AREA TO BE CUT
- PROPOSED SITE AREA TO BE CUT
- PROPOSED BUILDING AREA TO BE FILLED
- PROPOSED SITE AREA TO BE FILLED

NOTES:

1. SEE LANDSCAPE PLANS FOR DETAILS REGARDING TREE/LANDSCAPING PLANTING, AND ALL OTHER SITE FEATURES.
2. CONTRACTOR SHALL NOT STAGE, STORE, OR STOCKPILE ANY MATERIAL OR EQUIPMENT WITHIN THE PUBLIC ROAD RIGHT-OF-WAY. CONSTRUCTION PHASING SHALL BE COORDINATED TO KEEP MATERIALS AND EQUIPMENT ONSITE OR WITHIN PRIVATE PROPERTY.
3. CONTRACTOR SHALL PERFORM THEIR OWN EARTHWORK QUANTITY TAKEOFF/CALCULATIONS.
4. CUT AND FILL DOES NOT INCLUDE EXISTING OR PROPOSED FOOTING FOR BUILDING.
5. BACKFILL OF EXISTING BUILDING AND BASEMENT TO BE COVERED UNDER BUILDING AND DEMO PERMIT.

BUILDING EARTHWORK SUMMARY

CUT	0 CY
FILL	780 CY
NET FILL	780 CY

SITE EARTHWORK SUMMARY

CUT	884 CY
FILL	665 CY
NET CUT	219 CY

TOTAL EARTHWORK SUMMARY

CUT	780 CY
FILL	1,409 CY
NET CUT	561 CY

*FILL DOES NOT INCLUDE SHRINKAGE OR COMPACTION

GRAPHIC SCALE

20 0 10 20 40 80

(IN FEET)
1 inch = 20 ft.

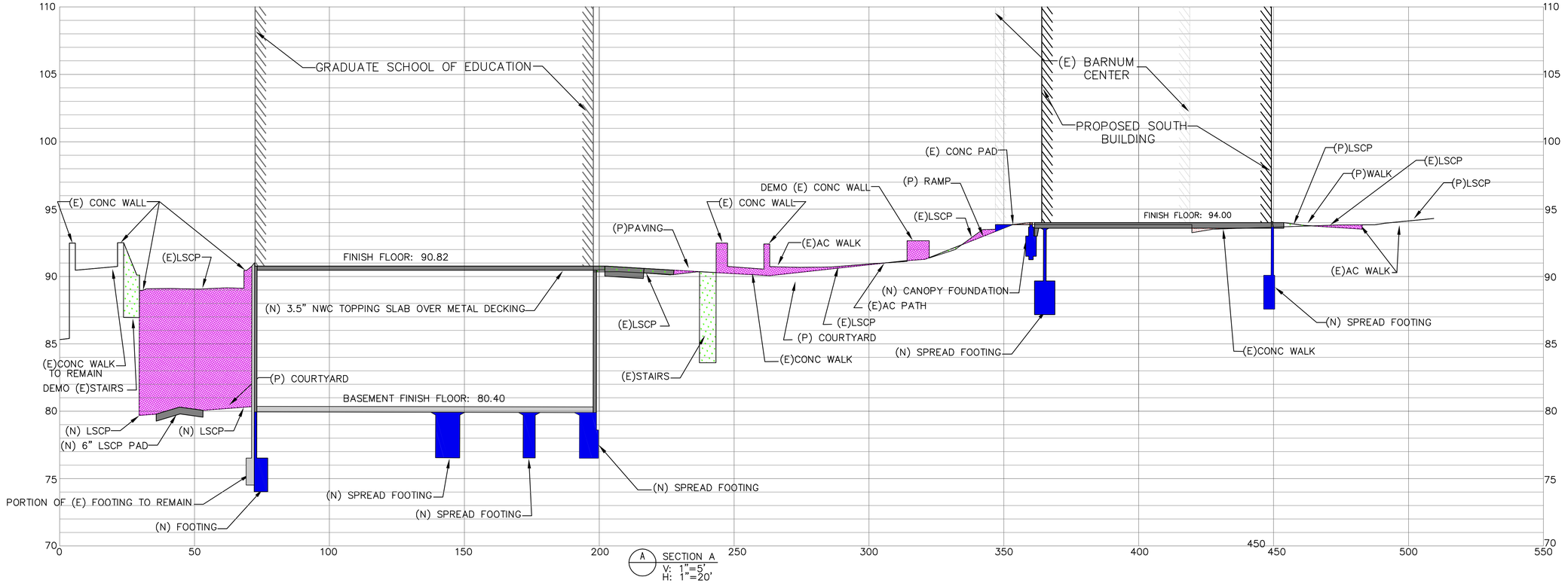

CAW ARCHITECTS
455 LAMBERT AVENUE PALO ALTO, CA 94306
WWW.CAWARCHITECTS.COM • 650.328.1818 • FAX: 650.328.1888
COPYRIGHT 2007 BY CAW ARCHITECTS, INC.
WILLIAM RAWN ASSOCIATES | Architects, Inc.
10 Post Office Sq.
Suite 1010
Boston, MA 02109

STAMP

REGISTERED PROFESSIONAL ENGINEER STEVEN REYNOLDS C 77988 CIVIL STATE OF CALIFORNIA

CONSULTANTS

BKF ENGINEERS
4670 WILLOW ROAD
SUITE 250
PLEASANTON, CA 94588
(925) 396-7700
www.bkf.com

MILESTONE	DATE
ASA SUBMISSION	12/7/2020
ASA RESUBMITTAL	8/20/2021

PROJECT NAME
STANFORD UNIVERSITY
GRADUATE SCHOOL OF EDUCATION
485 & 505 LASUEN MALL
STANFORD, CA 94305

SHEET TITLE
SECTIONS

PROJECT NO. 14029
DRAWN BY SR, NB
CHECKED BY JL

SHEET
C5.00

7/6/19 5:39:03 PM

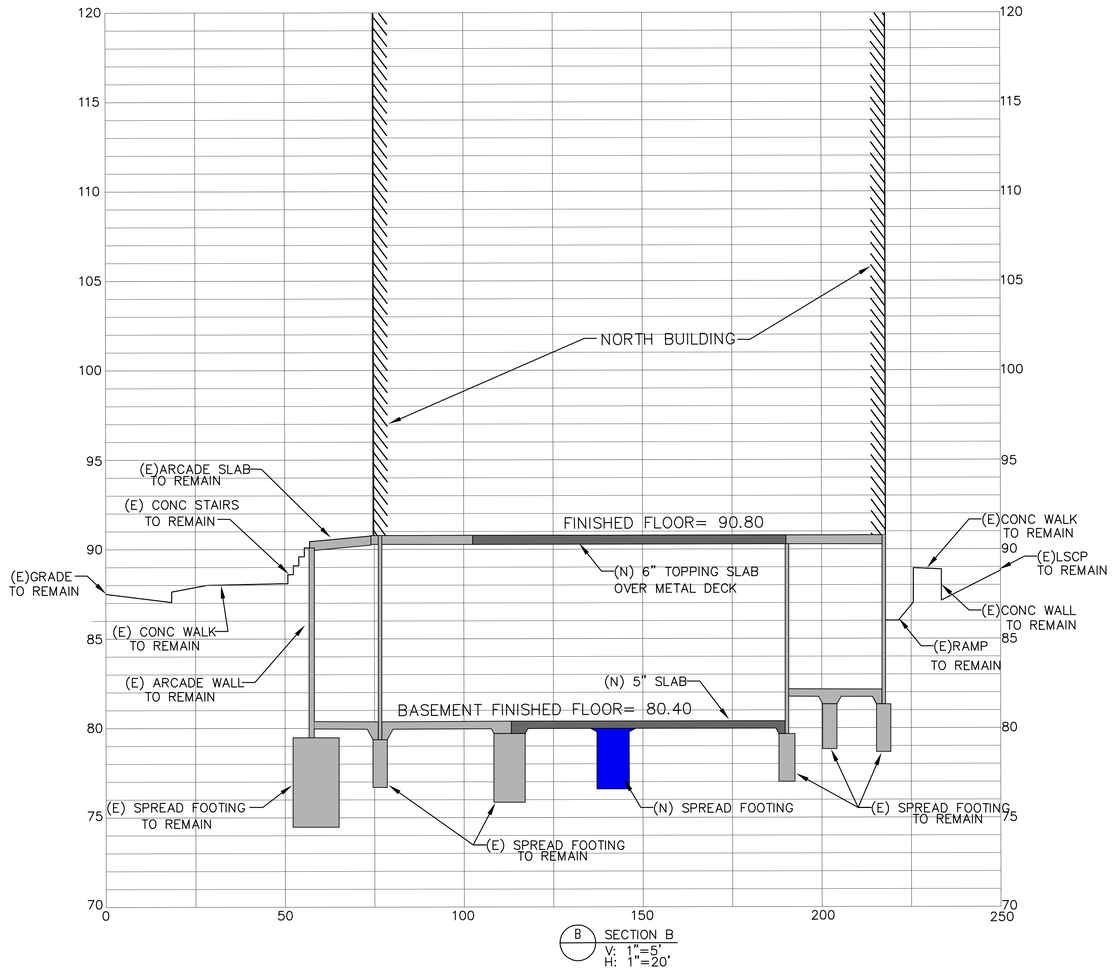

B SECTION B
V: 1"=5'
H: 1"=20'

CAW ARCHITECTS
455 LAMBERT AVENUE PALO ALTO, CA 94306
WWW.CAWARCHITECTS.COM • 650.328.1818 • FAX: 650.328.1888

COPYRIGHT 2007 BY CAW ARCHITECTS, INC.

WILLIAM RAWN ASSOCIATES | Architects, Inc.
10 Post Office Sq.
Suite 1010
Boston, MA 02109

STAMP

REGISTERED PROFESSIONAL ENGINEER STEVEN REYNOLDS C 77988 CIVIL STATE OF CALIFORNIA

CONSULTANTS

BKF ENGINEERS
4670 WILLOW ROAD
SUITE 250
PLEASANTON, CA 94588
(925) 396-7700
www.bkf.com

MILESTONE	DATE
ASA SUBMISSION	12/7/2020
ASA RESUBMITTAL	8/20/2021

PROJECT NAME
STANFORD UNIVERSITY
GRADUATE SCHOOL OF EDUCATION
485 & 505 LASUEN MALL
STANFORD, CA 94305

SHEET TITLE
SECTIONS

PROJECT NO. 14029
DRAWN BY SR, NB
CHECKED BY JL

SHEET
C5.01

7/6/19 5:39:03 PM

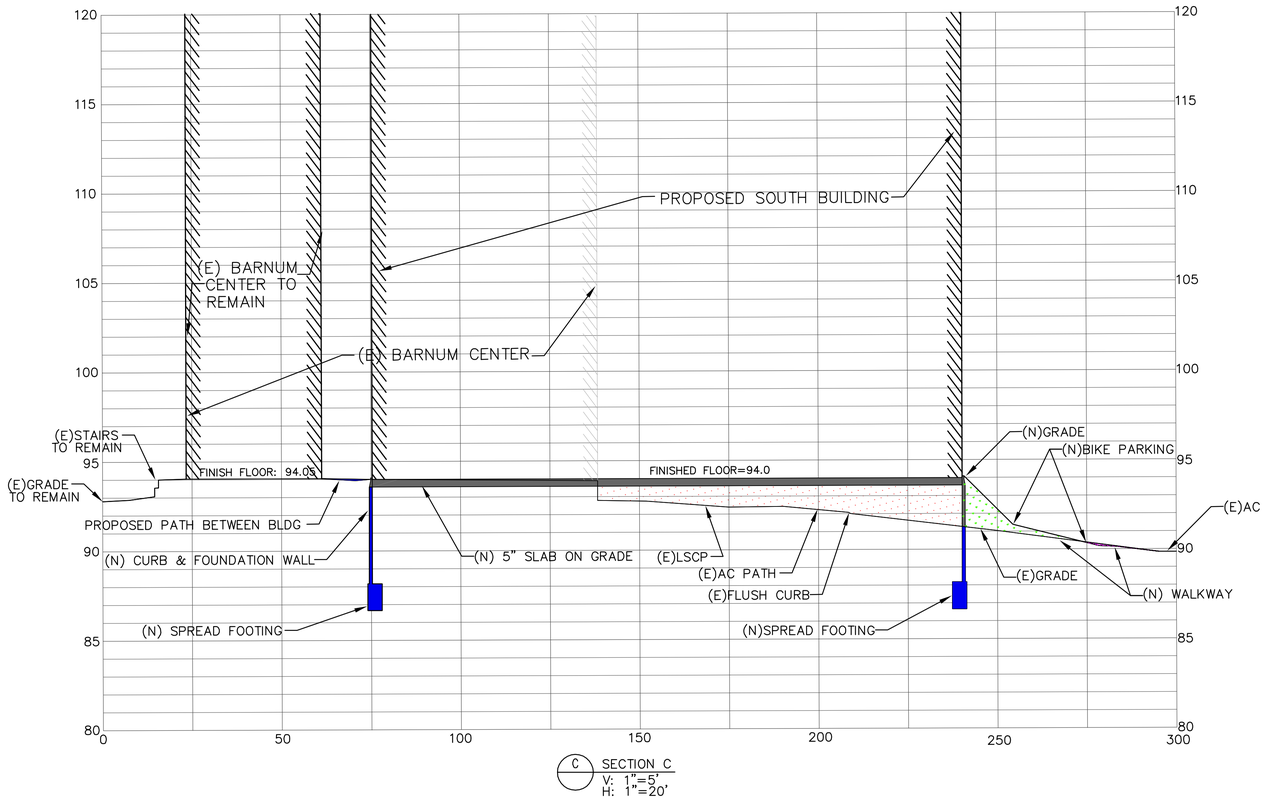

C SECTION C
V: 1"=5'
H: 1"=20'

CAW ARCHITECTS
455 LAMBERT AVENUE PALO ALTO, CA 94306
WWW.CAWARCHITECTS.COM • 650.328.1818 • FAX: 650.328.1888

COPYRIGHT 2007 BY CAW ARCHITECTS, INC.

WILLIAM RAWN ASSOCIATES | Architects, Inc.
10 Post Office Sq.
Suite 1010
Boston, MA 02109

STAMP

REGISTERED PROFESSIONAL ENGINEER STEVEN REYNOLDS C 77988 CIVIL STATE OF CALIFORNIA

CONSULTANTS

BKF ENGINEERS
4670 WILLOW ROAD
SUITE 250
PLEASANTON, CA 94588
(925) 396-7700
www.bkf.com

MILESTONE	DATE
ASA SUBMISSION	12/7/2020
ASA RESUBMITTAL	8/20/2021

PROJECT NAME
STANFORD UNIVERSITY
GRADUATE SCHOOL OF EDUCATION
485 & 505 LASUEN MALL
STANFORD, CA 94305

SHEET TITLE
SECTIONS

PROJECT NO. 14029
DRAWN BY SR, NB
CHECKED BY JL

SHEET
C5.02

7/6/19 5:39:03 PM

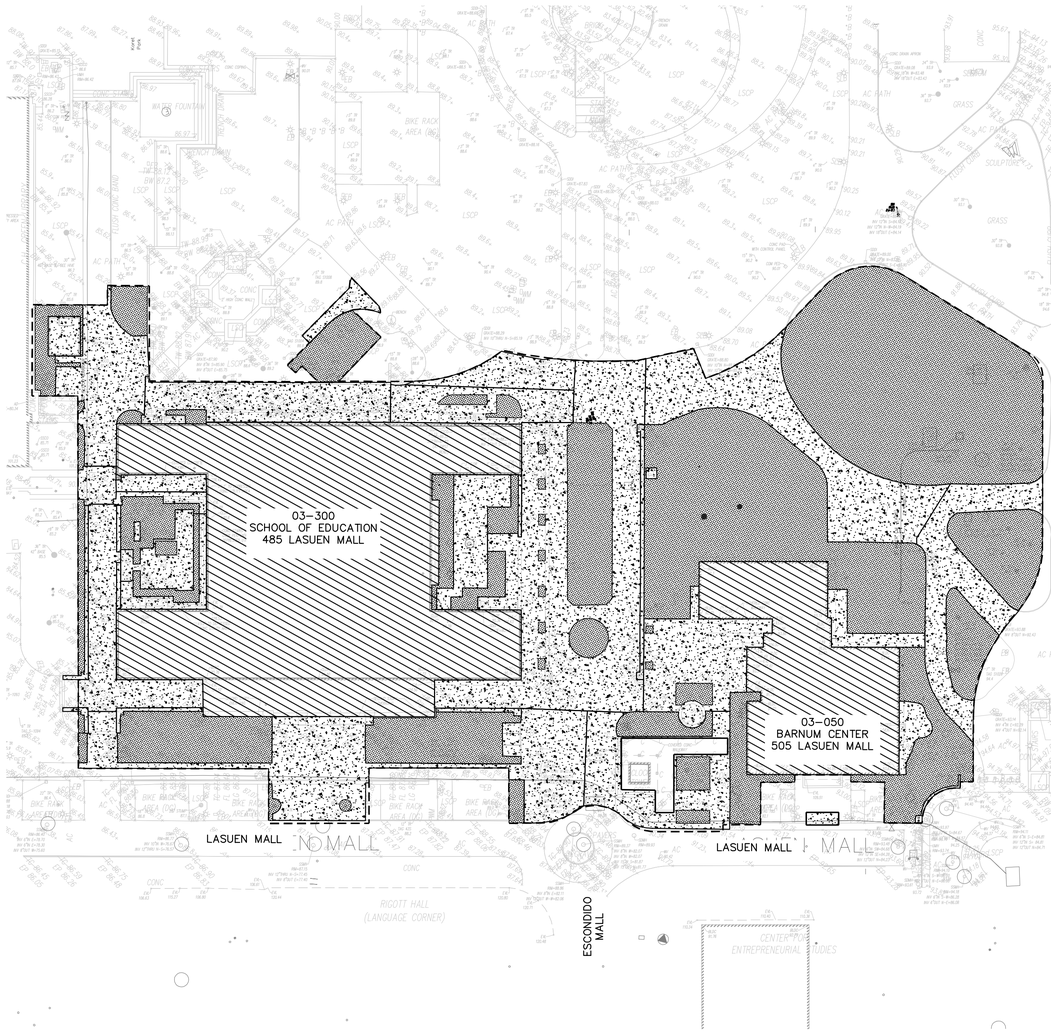

EXISTING IMPERVIOUS/PERVIOUS

LEGEND

TOTAL SITE AREA: 132,602 SQ FT

- IMPERVIOUS
- ROOF
- PERVIOUS LANDSCAPE

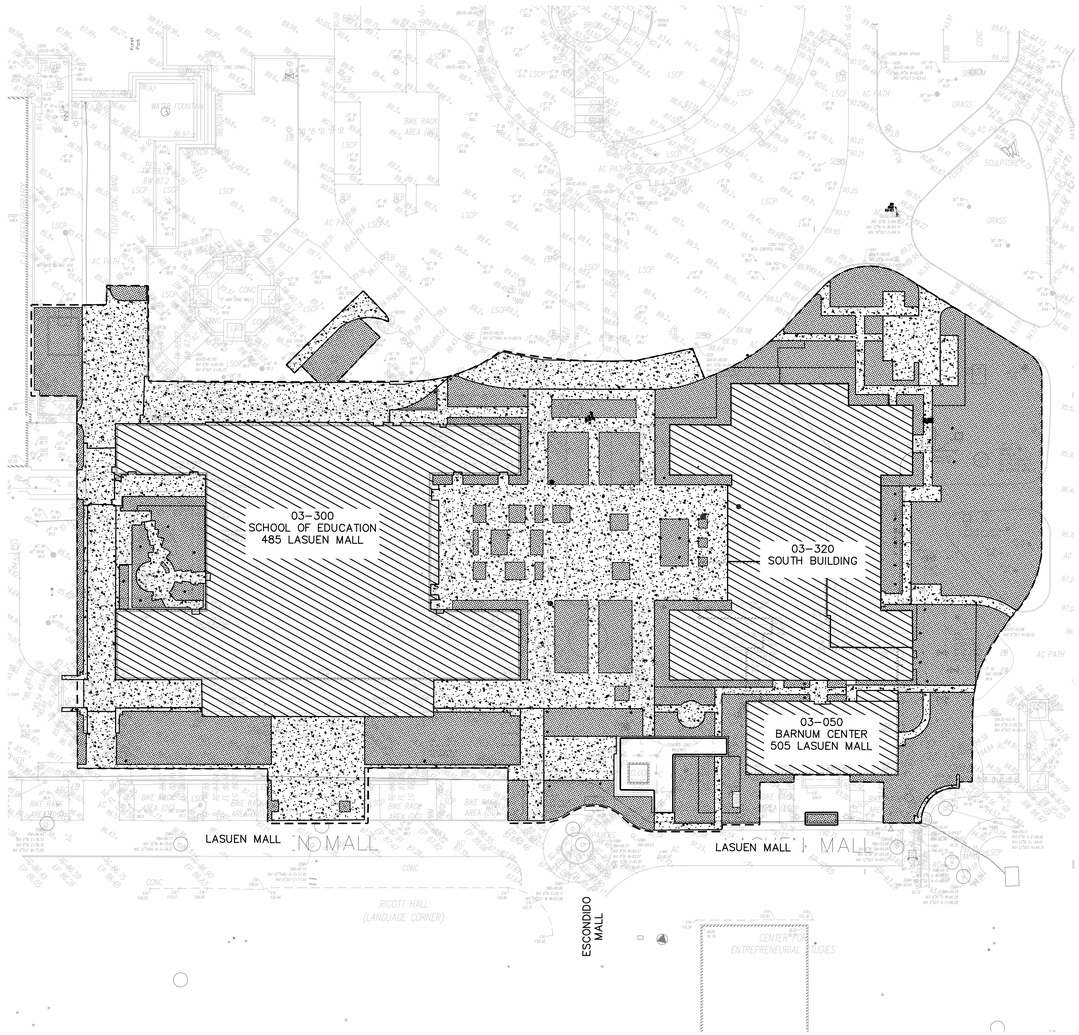

PROPOSED IMPERVIOUS/PERVIOUS

LEGEND

TOTAL SITE AREA: 132,602 SQ FT

- IMPERVIOUS
- ROOF
- PERVIOUS LANDSCAPE

DMA	SITE AREA (SF)	VEHICULAR IMP AREA (SF)	NON-VEHICULAR IMP AREA (SF)	TREATMENT METHOD
1	132,602	4,106	86,862	IN-LIEU

NOTES:
1.) IN-LIEU TREATMENT IS FROM THE EAST CAMPUS WATER CAPTURE FACILITY COUNTY FILE NUMBER 11044-17C3.

GRAPHIC SCALE

40 0 20 40 80 160

(IN FEET)
1 inch = 40 ft.

CAW ARCHITECTS
455 LAMBERT AVENUE PALO ALTO, CA 94306
WWW.CAWARCHITECTS.COM • 650.328.1818 • FAX: 650.328.1888

COPYRIGHT 2017 BY CAW ARCHITECTS, INC.

WILLIAM RAWN ASSOCIATES | Architects, Inc.
10 Post Office Sq.
Suite 1010
Boston, MA 02109

STAMP

REGISTERED PROFESSIONAL ENGINEER
STEVEN REYNOLDS
C 77986
CIVIL
STATE OF CALIFORNIA

CONSULTANTS

BKF ENGINEERS
4670 WILLOW ROAD
SUITE 250
PLEASANTON, CA 94588
(925) 396-7700
www.bkf.com

MILESTONE	DATE
ASA SUBMISSION	12/7/2020
ASA RESUBMITTAL	8/20/2021

PROJECT NAME

STANFORD UNIVERSITY
GRADUATE SCHOOL OF EDUCATION
485 & 505 LASUEN MALL
STANFORD, CA 94305

SHEET TITLE

STORMWATER MANAGEMENT PLAN

PROJECT NO. 14029
DRAWN BY SR, NB
CHECKED BY JL

SHEET

C6.00

7/6/19 5:39:03 PM

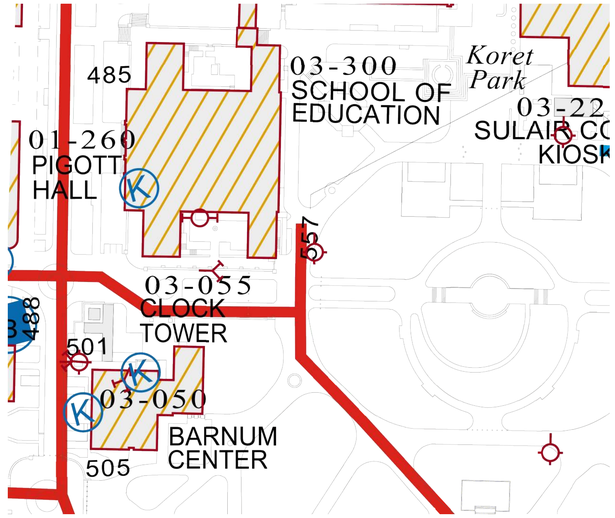

EXISTING CAMPUS FIRE ACCESS

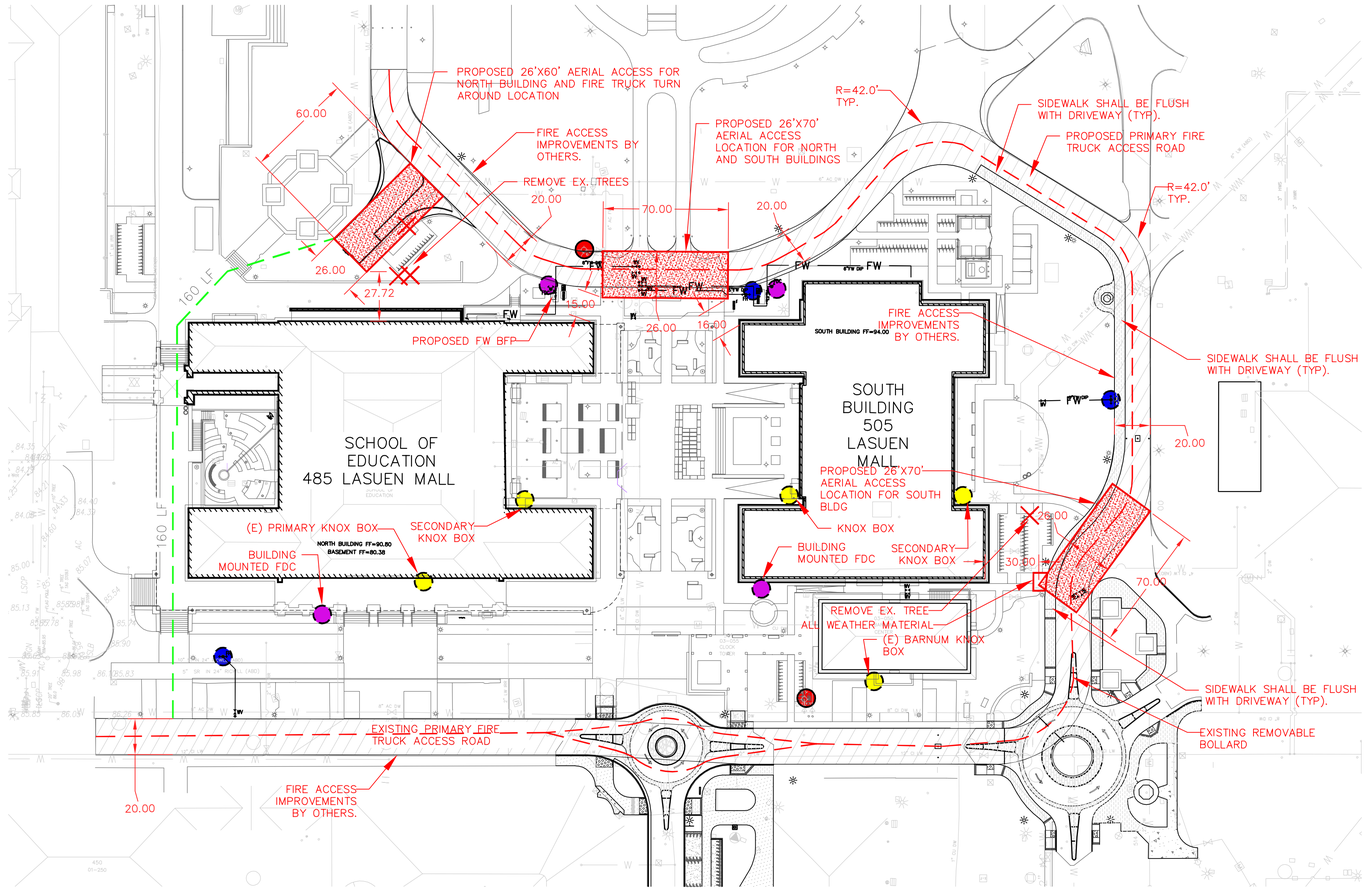

LEGEND

- EXISTING FIRE HYDRANT
- PROPOSED FIRE HYDRANT
- PROPOSED FIRE DEPARTMENT CONNECTION
- KNOX BOX
- PRIMARY FIRE ACCESS
- HOSE REACH

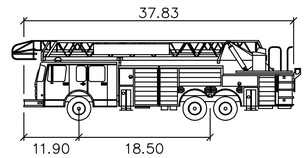

Fire Truck T6 feet

Width	: 8.50
Track	: 8.00
Lock to Lock Time	: 6.0
Steering Angle	: 30.5

NOT TO SCALE

NOTES:

PROPOSED ACCESS ROADS TO BE MADE OF AN ALL WEATHER MATERIAL COMPLIANT WITH 75,000 LB LOAD CAPACITY.

FIRE WATER BFP, FDC, AND HYDRANTS TO HAVE A MINIMUM 3 FOOT CLEARANCE FROM ALL DEVICES AND OTHER SITE OBSTRUCTIONS. ALL FIRE WATER DEVICES MUST BE CLEARLY VISIBLE.

REFER TO FIRE WATER SPRINKLER PLANS FOR FIRE FLOW INFORMATION AND DETAILS.

REQUESTING USE OF EXCEPTION #1 PER FIRE CODE SECTION 503.1.1 FOR APPROVED INCREASED HOSE REACH PER DRAWING DUE TO INCREASED SPRINKLER DESIGN.

"Exceptions:
1. The fire code official is authorized to increase the dimension of 150 feet (45 720 mm) where any of the following conditions occur.
1.1 The building is equipped throughout with an approved automatic sprinkler system installed in accordance with Section 903.3.1.1, 903.3.1.2 or 903.3.1.3."

GRAPHIC SCALE

40 0 20 40 80 160

(IN FEET)
1 inch = 40 ft.

CAW ARCHITECTS
455 LAMBERT AVENUE PALO ALTO, CA 94306
WWW.CAWARCHITECTS.COM • 650.328.1818 • FAX: 650.328.1888

COPYRIGHT 2017 BY CAW ARCHITECTS, INC.

WILLIAM RAWN ASSOCIATES | Architects, Inc.
10 Post Office Sq.
Suite 1010
Boston, MA 02109

STAMP

REGISTERED PROFESSIONAL ENGINEER STEVEN REYNOLDS C 77586 CIVIL STATE OF CALIFORNIA

CONSULTANTS

BKF ENGINEERS
4670 WILLOW ROAD
SUITE 250
PLEASANTON, CA 94588
(925) 396-7700
www.bkf.com

MILESTONE	DATE
ASA SUBMISSION	12/7/2020
ASA RESUBMITTAL	8/20/2021

PROJECT NAME

STANFORD UNIVERSITY
GRADUATE SCHOOL OF EDUCATION
485 & 505 LASUEN MALL
STANFORD, CA 94305

SHEET TITLE

FIRE TRUCK ACCESS

PROJECT NO. 14029
DRAWN BY SR, NB
CHECKED BY JL

SHEET

C7.01

7/6/19 5:39:03 PM

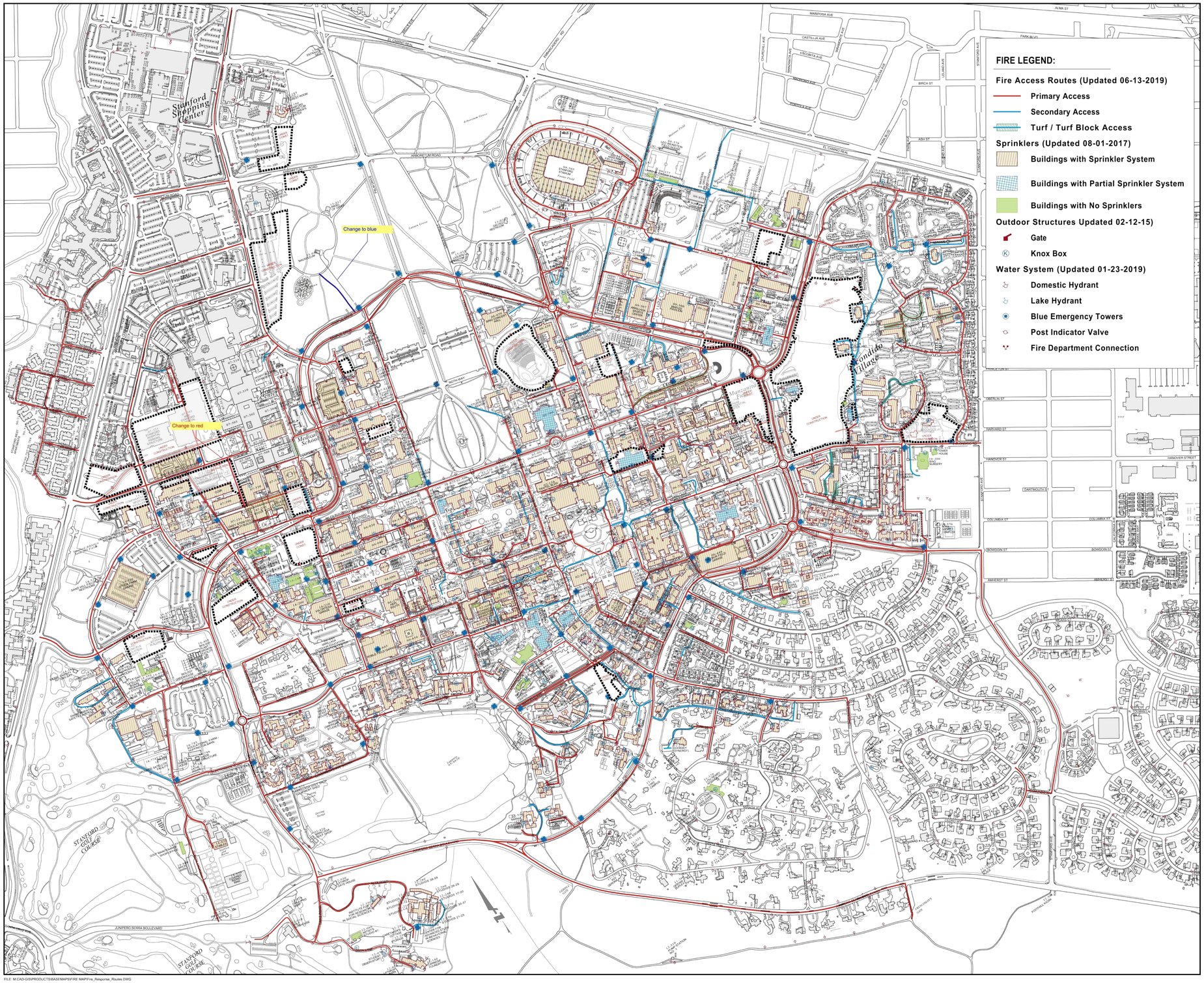

FIRE LEGEND:

Fire Access Routes (Updated 06-13-2019)
- Primary Access
- Secondary Access
- Turf / Turf Block Access

Sprinklers (Updated 08-01-2017)
- Buildings with Sprinkler System
- Buildings with Partial Sprinkler System
- Buildings with No Sprinklers

Outdoor Structures Updated 02-12-15)
- Gate
- Knox Box

Water System (Updated 01-23-2019)
- Domestic Hydrant
- Lake Hydrant
- Blue Emergency Towers
- Post Indicator Valve
- Fire Department Connection

CAMPUS FIRE RESPONSE ROUTES

DATE: 06/13/2019
SCALE: 1" = 360'
DRAWN BY: JW Mcintosh

Please Note:
The data on this drawing is based on the best available information. Absolute accuracy is not guaranteed. Field verification recommended for exact dimensions.

SHEET 1 OF 1

FILE: M:CAD-GIS\PRODUCTS\BASEMAPS\FIRE MAP\Fire_Response_Routes.DWG

SHEET FOR REFERENCE ONLY

CAW ARCHITECTS
455 LAMBERT AVENUE PALO ALTO, CA 94306
WWW.CAWARCHITECTS.COM • 650.328.1818 • FAX: 650.328.1888

COPYRIGHT 2007 BY CAW ARCHITECTS, INC.

WILLIAM RAWN ASSOCIATES | Architects, Inc.
10 Post Office Sq.
Suite 1010
Boston, MA 02109

STAMP

REGISTERED PROFESSIONAL ENGINEER
STEVEN REYNOLDS
C 77988
CIVIL
STATE OF CALIFORNIA

CONSULTANTS

BKF ENGINEERS
4670 WILLOW ROAD
SUITE 250
PLEASANTON, CA 94588
(925) 396-7700
www.bkf.com

MILESTONE	DATE
ASA SUBMISSION	12/7/2020
ASA RESUBMITTAL	8/20/2021

PROJECT NAME

STANFORD UNIVERSITY
GRADUATE SCHOOL OF EDUCATION
485 & 505 LASUEN MALL
STANFORD, CA 94305

SHEET TITLE

CAMPUS FIRE RESPONSE ROUTES

PROJECT NO. 14029
DRAWN BY SR, NB
CHECKED BY JL

SHEET

C7.02

7/6/19 5:39:03 PM

LEGEND

EXISTING VEHICULAR RATED GRID PAVING

EXISTING VEHICULAR ASPHALT CONCRETE PAVING
(3.5' AC / 13" CL II AB)

NEW VEHICULAR ASPHALT CONCRETE PAVING
(3.5' AC / 13" CL II AB)

NEW VEHICULAR RATED GRID PAVING – GRAVELPAVE2 / 12" CL II AB. GRAVELPAVE2 FILL MATERIAL SHALL BE $\frac{3}{16}$" TO $\frac{3}{8}$" IN SIZE. SET TOP OF GRAVEL PAVE ELEVATION 1" LOWER THAN SURROUNDING FLUSH CURB AND COVER WITH MULCH.

LEGEND

(1) EXISTING STORM DRAIN TO REMAIN.

(78.09±) 78.09± EXISTING GRADE / PROPOSED ELEVATION

8.0% EXISTING SLOPE

8.0% PROPOSED SLOPE

EXISTING EDGE OF PAVEMENT

PROPOSED EDGE OF PAVEMENT (1 / C7.02)

SAWCUT

NOTES

1. THE FIRE DEPARTMENT ACCESS WILL BE MADE OF AN "ALL WEATHER" MATERIAL CAPABLE OF HOLDING 75,000 LBS.

ABBREVIATIONS

FG	FINISHED GRADE
PV	PAVEMENT ELEVATION
TC	TOP OF CURB

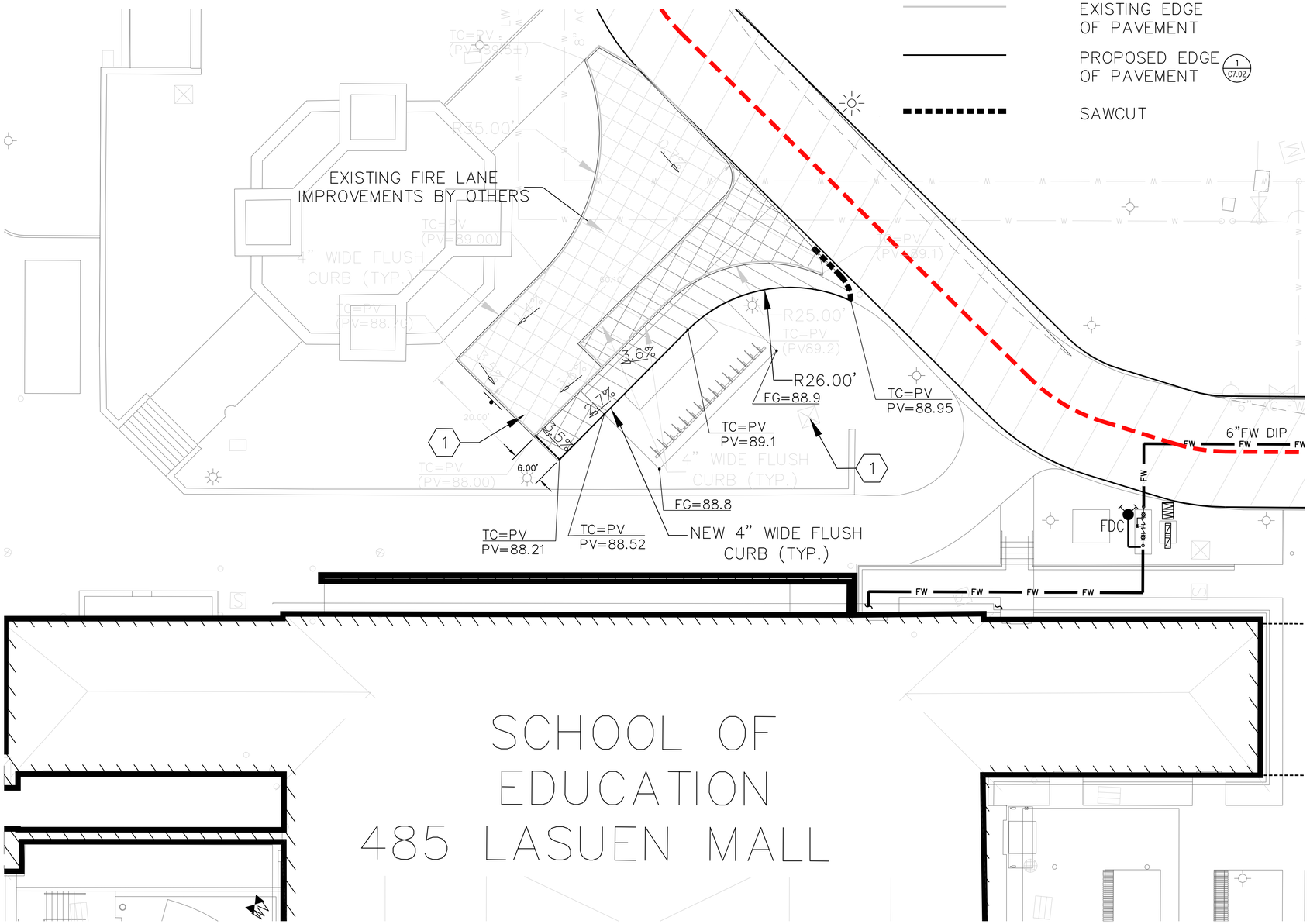

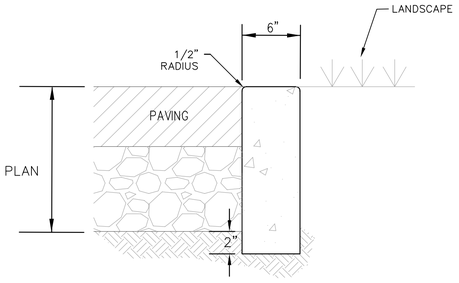

1 / – FLUSH CURB DETAIL
N.T.S.

GRAPHIC SCALE
10 0 5 10 20 40
(IN FEET)
1 inch = 10 ft.

CAW ARCHITECTS
455 LAMBERT AVENUE PALO ALTO, CA 94306
WWW.CAWARCHITECTS.COM • 650.328.1818 • FAX: 650.328.1888

COPYRIGHT 2021 BY CAW ARCHITECTS, INC.

WILLIAM RAWN ASSOCIATES | Architects, Inc.
10 Post Office Sq.
Suite 1010
Boston, MA 02109

STAMP

REGISTERED PROFESSIONAL ENGINEER STEVEN REYNOLDS C 77586 CIVIL STATE OF CALIFORNIA

CONSULTANTS

BKF ENGINEERS
4670 WILLOW ROAD
SUITE 250
PLEASANTON, CA 94588
(925) 396-7700
www.bkf.com

MILESTONE	DATE
ASA SUBMISSION	12/7/2020
ASA RESUBMITTAL	8/20/2021

PROJECT NAME
STANFORD UNIVERSITY
GRADUATE SCHOOL OF EDUCATION
485 & 505 LASUEN MALL
STANFORD, CA 94305

SHEET TITLE
FIRE TRUCK TURNAROUND

PROJECT NO. 14029
DRAWN BY SR, NB
CHECKED BY JL

SHEET
C7.03

7/6/19 5:39:03 PM

BASIS OF BEARINGS

NAD 83 CALIFORNIA COORDINATES SYSTEM, ZONE 3, EPOCH 1991.35, HOLDING COORDINATES FOR CONTROL POINTS S-120 & S121 AS SAID POINTS ARE SHOWN ON THE RECORD OF SURVEY MAP OF "STANFORD UNIVERSITY MASTER SURVEY CONTROL NETWORK", DATED MARCH 2002, RECORDED IN BOOK 747 OF MAPS, AT PAGES 40 THROUGH 49, SANTA CLARA COUNTY RECORDS.

ELEVATION DATUM

STANFORD CONTROL POINT AND BENCHMARK S120, A 2.5" BRASS DISC WITH A PUNCH MARK IN A MONUMENT WELL IN THE CUL-DE-SAC AT THE WESTERLY END OF ESCONDIDO ROAD AS SHOWN ON R.O.S. 744 M 40-49.

EXISTING BUILDING NN/N1
N 1982111.5635
E 6077355.0862

EXISTING BUILDING NL/N1
N 1982118.8870
E 6077329.4449

EXISTING BUILDING ND/N1
N 1982140.1709
E 6077254.9248

EXISTING BUILDING NB/N1
N 1982150.2407
E 6077219.6679

EXISTING BUILDING NN/N19
N 1981896.4969
E 6077293.6605

EXISTING BUILDING ND/N19
N 1981925.1042
E 6077193.4991

EXISTING BUILDING NA/N19
N 1981940.3920
E 6077139.9728

PROPOSED BUILDING S10/SA
N 1981813.4485
E 6077268.5542

PROPOSED BUILDING S8/SA
N 1981820.0397
E 6077245.4770

PROPOSED BUILDING S3/SA
N 1981841.9186
E 6077168.8735

PROPOSED BUILDING S1/SA
N 1981851.5306
E 6077135.2193

PROPOSED BUILDING S11/SH
N 1981671.0029
E 6077239.3098

PROPOSED BUILDING S8/SG
N 1981695.0382
E 6077209.7750

PROPOSED BUILDING S1/SH
N 1981712.1059
E 6077095.3979

1"=20'

GRAPHIC SCALE

20 0 10 20 40 80
(IN FEET)
1 inch = 20 ft.

CAW ARCHITECTS
455 LAMBERT AVENUE PALO ALTO, CA 94306
WWW.CAWARCHITECTS.COM • 650.328.1818 • FAX: 650.328.1888

COPYRIGHT 2017 BY CAW ARCHITECTS, INC.

WILLIAM RAWN ASSOCIATES | Architects, Inc.
10 Post Office Sq.
Suite 1010
Boston, MA 02109

STAMP

REGISTERED PROFESSIONAL ENGINEER STEVEN REYNOLDS C 77986 CIVIL STATE OF CALIFORNIA

CONSULTANTS

BKF ENGINEERS
4670 WILLOW ROAD
SUITE 250
PLEASANTON, CA 94588
(925) 396-7700
www.bkf.com

MILESTONE	DATE
ASA SUBMISSION	12/7/2020
ASA RESUBMITTAL	8/20/2021

PROJECT NAME

STANFORD UNIVERSITY
GRADUATE SCHOOL OF EDUCATION
485 & 505 LASUEN MALL
STANFORD, CA 94305

SHEET TITLE

HORIZONTAL CONTROL PLAN

PROJECT NO. 14029
DRAWN BY SR, NB
CHECKED BY JL

SHEET

C8.00

7/6/19 5:39:03 PM

LEGEND

- STORM DRAIN INLET PROTECTION PER CASQA DETAIL SE-10
- FIBER ROLLS PER CASQA DETAIL SE-5
- LIMIT OF WORK
- STABILIZED CONSTRUCTION ENTRANCE/EXIT PER CASQA DETAIL TC-1
- CURB INLET SEDIMENT DAM
- PROPOSED STORM DRAIN CATCH BASIN
- X — PROPOSED TREE PROTECTION FENCING

SCHOOL OF EDUCATION
485 LASUEN MALL

SOUTH BUILDING
505
LASUEN
MALL

NORTH BUILDING FF=90.80
BASEMENT FF=80.38

SOUTH BUILDING FF=94.00

STORM DRAIN INLET PROTECTION PER CASQA DETAIL SE-10

STORM DRAIN INLET PROTECTION PER CASQA DETAIL SE-10

MATCHLINE SEE SHEET C9.02

GRAPHIC SCALE
(IN FEET)
1 inch = 20 ft.

CAW ARCHITECTS
455 LAMBERT AVENUE PALO ALTO, CA 94306
WWW.CAWARCHITECTS.COM • 650.328.1818 • FAX: 650.328.1888

COPYRIGHT 2017 BY CAW ARCHITECTS, INC.

WILLIAM RAWN ASSOCIATES | Architects, Inc.
10 Post Office Sq.
Suite 1010
Boston, MA 02109

STAMP

REGISTERED PROFESSIONAL ENGINEER
STEVEN REYNOLDS
C 77588
CIVIL
STATE OF CALIFORNIA

CONSULTANTS

BKF ENGINEERS
4670 WILLOW ROAD
SUITE 250
PLEASANTON, CA 94588
(925) 396-7700
www.bkf.com

MILESTONE	DATE
ASA SUBMISSION	12/7/2020
ASA RESUBMITTAL	8/20/2021

PROJECT NAME
STANFORD UNIVERSITY
GRADUATE SCHOOL OF EDUCATION
485 & 505 LASUEN MALL
STANFORD, CA 94305

SHEET TITLE
EROSION CONTROL PLAN

PROJECT NO. 14029
DRAWN BY SR, NB
CHECKED BY JL

SHEET
C9.01

7/6/19 5:39:03 PM

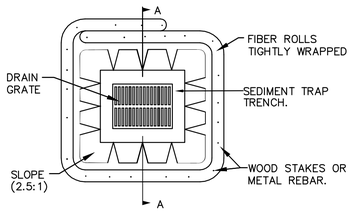

PLAN VIEW

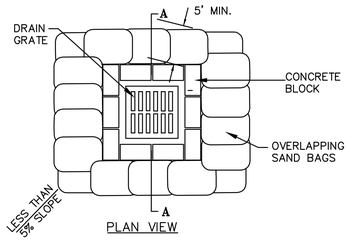

PLAN VIEW

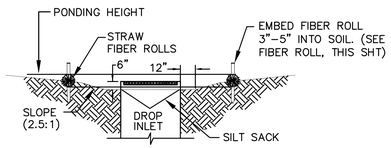

SECTION A–A

IN LANDSCAPING

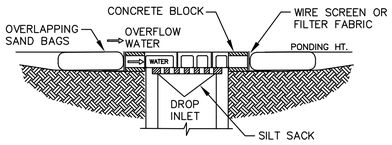

SECTION A–A

IN PAVEMENT

1 DRAIN INLET PROTECTION
CASQA SE–10

TREE PROTECTION NOTES:

1. ALL TREE PROTECTION AND INSPECTION SCHEDULE MEASURES, DESIGN RECOMMENDATIONS, WATERING AND CONSTRUCTION SCHEDULING SHALL BE EXECUTED IN FULL BY OWNER AND CONTRACTOR, AS STATED ON SHEETS T–1, T–2, T–3, T–7A, L1.00 AND L1.01, IN THE TREE PROTECTION REPORT, AND THE APPROVED PLANS.
2. UTILITY TRENCHING SHALL NOT OCCUR WITHIN THE TPZ OF PROTECTED TREES, BEYOND THAT INDICATED ON DRAWINGS. CONTRACTOR SHALL BE RESPONSIBLE FOR ENSURING THAT NO TRENCHING OCCURS WITHIN THE TPZ OF THE PROTECTED TREES BY CONTRACTORS, CITY CREWS, OR FINAL LANDSCAPE WORKERS.
3. PRUNING RESTRICTIONS – NO PRUNING OR CLEARANCE CUTTING OF BRANCHES IS PERMITTED ON CITY TREES. CONTRACTOR SHALL OBTAIN A PUBLIC TREE PERMIT FROM URBAN FORESTRY (650–496–5953).
4. CONTACT PROJECT ARBORIST BEFORE WORK IN TPZ.
5. THE ENTIRE CONSTRUCTION SITE IS A TREE PROTECTION AWARENESS ZONE. REFERENCE T–7A. ALL TRADES ARE RESPONSIBLE FOR PARTICIPATING IN PROTECTION OF EXISTING TREES AND DOING NO HARM TO TREES OR THEIR ROOT SYSTEMS.

EROSION CONTROL NOTES

1. SEE COUNTY OF SANTA CLARA EROSION CONTROL TEMPLATES EC1 AND EC2 FOR BEST MANAGEMENT PRACTICES AND EROSION CONTROL DETAILS.
2. FIBER ROLLS SHALL BE INSTALLED AROUND THE PERIMETER ALONG THE CONSTRUCTION FENCE.
3. THIS SHEET IS INTENDED FOR EROSION CONTROL ONLY
4. IT IS THE CONTRACTOR'S RESPONSIBILITY TO IMPLEMENT ALL REQUIREMENTS SET FORTH IN THE STATE WATER RESOURCES CONTROL BOARD (SWRCB) ORDER NO. XX–XXXX–XXXX–DWQ, NPDES GENERAL PERMIT NO. WDID:X XXXXXXXXX, STORM WATER DISCHARGES ASSOCIATED WITH CONSTRUCTION AND LAND DISTURBANCE ACTIVITIES, ALSO KNOWN AS THE CONSTRUCTION GENERAL PERMIT (CGP) AND THE PROJECT STORM WATER POLLUTION PREVENTION PLAN (SWPPP).
5. IT IS THE CONTRACTOR'S RESPONSIBILITY TO RETAIN A QUALIFIED STORM WATER POLLUTION PREVENTION PLAN PRACTITIONER (QSP) THAT WILL MONITOR THE SITE, IN ACCORDANCE WITH THE CGP.
6. THIS PLAN MAY NOT COVER ALL THE SITUATIONS THAT ARISE DURING CONSTRUCTION DUE TO UNANTICIPATED FIELD CONDITIONS. IN GENERAL, THE CONTRACTOR IS RESPONSIBLE FOR KEEPING ANY SEDIMENT FROM LEAVING THE SITE. FIBER ROLLS, SAND BAGS AND ADDITIONAL SILT FENCES SHALL BE USED BY THE CONTRACTOR ON AN AS NEEDED BASIS TO INHIBIT SILT FROM LEAVING THE SITE AND ENTERING THE STORM DRAIN SYSTEM. ALL EXISTING, TEMPORARY OR PERMANENT CATCH BASINS SHALL USE THE SEDIMENT BARRIERS SHOWN ON THIS PLAN.
7. STORM DRAIN PIPING IS SHOWN FOR REFERENCE ONLY. SEE SHEET C4.00 FOR UTILITY RELATED WORK.

LEGEND

- STORM DRAIN INLET PROTECTION PER CASQA DETAIL SE–10
- FIBER ROLLS PER CASQA DETAIL SE–5
- LIMIT OF WORK
- STABILIZED CONSTRUCTION ENTRANCE/EXIT PER CASQA DETAIL TC–1
- CURB INLET SEDIMENT DAM
- PROPOSED STORM DRAIN CATCH BASIN
- X — PROPOSED TREE PROTECTION FENCING

ABBREVIATIONS

AB	AGGREGATE BASE
AC	ASPHALT CONCRETE
AD	AREA DRAIN
ALT	ALTERNATE
BC	BOTTOM OF CURB
BFP	BACK FLOW PREVENTER
BW	BEGINNING OF WALL
CO	CLEANOUT
CONC	CONCRETE
CU	COPPER PIPE
CW	CHILLED WATER
CWR	CHILLED WATER RETURN
CWS	CHILLED WATER SERVICE
DI	DRAIN INLET
DIP	DUCTILE IRON PIPE
DW	DOMESTIC WATER
E	ELEVATION
ECR	END CURB RETURN
EG	EXISTING GRADE
ELEC	ELECTRICAL
EP	EDGE OF PAVEMENT
EW	END OF WALL
EX	EXISTING
FDC	FIRE DEPARTMENT CONNECTION
FG	FINISHED GRADE
FH	FIRE HYDRANT
FS	FIRE SERVICE
FW	FIRE WATER
GES	GREEN EARTH SCIENCE
HWR	HOT WATER RETURN
HWS	HOT WATER SERVICE
INV	INVERT
IRR	IRRIGATION
KV	KILO – VOLT
LG	LIP OF GUTTER
LW	LAKE WATER
MH	MANHOLE
MIN	MINIMUM
OC	ON CENTER
PC	POINT ON CURVE
PIV	POST INDICATOR VALVE
POC	POINT OF CONNECTION
PP	PERFORATED PIPE
PR	PROPOSED
PVC	POLYVINYL CHLORIDE
PVI	POINT OF VERTICAL INTERSECTION
PWR	POWER
RW	RECYCLED WATER
RCP	REINFORCED CONCRETE PIPE
S	STATION
SD	STORM DRAIN
SDFM	STORM DRAIN FORCE MAIN
SEQ	SCIENCE & ENGINEERING QUAD
SIG	SIGNAL
SS	SANITARY SEWER
SSR	SOUTH SERVICE ROAD
SW	SEARSVILLE WATER
TC	TOP OF CURB. TELECOM
TEL	TELEPHONE
TYP	TYPICAL
TW	TOP OF WALL
VC	VERTICAL CURVE
W	WATER
WM	WATER METER
WV	WATER VALVE

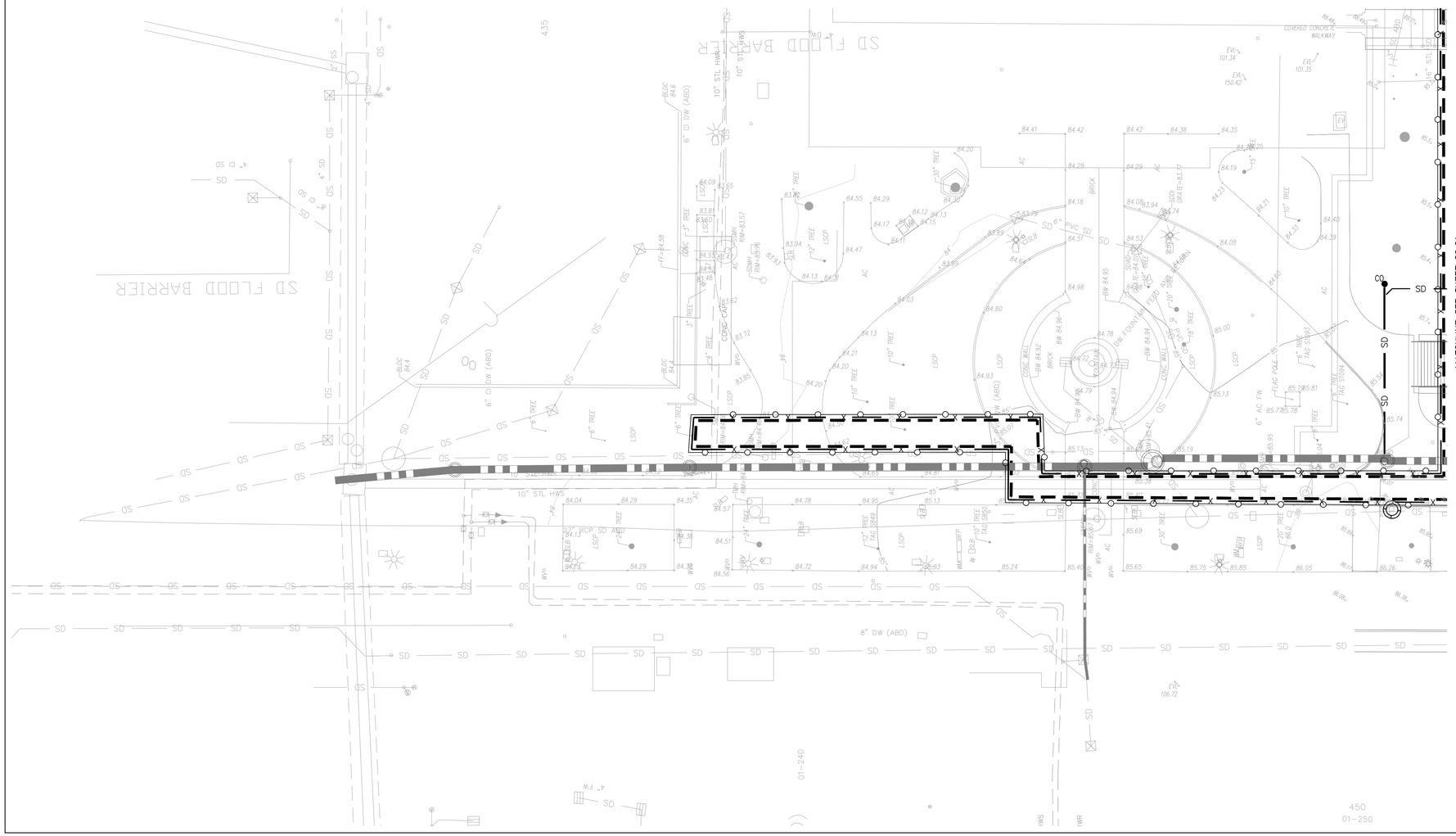

GRAPHIC SCALE

20 0 10 20 40 80

(IN FEET)
1 inch = 20 ft.

CAW ARCHITECTS
455 LAMBERT AVENUE PALO ALTO, CA 94306
WWW.CAWARCHITECTS.COM • 650.328.1818 • FAX: 650.328.1888

COPYRIGHT 2007 BY CAW ARCHITECTS, INC.

WILLIAM RAWN ASSOCIATES | Architects, Inc.
10 Post Office Sq.
Suite 1010
Boston, MA 02109

STAMP

REGISTERED PROFESSIONAL ENGINEER STEVEN REYNOLDS C 77988 CIVIL STATE OF CALIFORNIA

CONSULTANTS

BKF ENGINEERS
4670 WILLOW ROAD
SUITE 250
PLEASANTON, CA 94588
(925) 396-7700
www.bkf.com

MILESTONE	DATE
ASA SUBMISSION	12/7/2020
ASA RESUBMITTAL	8/20/2021

PROJECT NAME

STANFORD UNIVERSITY
GRADUATE SCHOOL OF EDUCATION
485 & 505 LASUEN MALL
STANFORD, CA 94305

SHEET TITLE

EROSION CONTROL PLAN

PROJECT NO. 14029
DRAWN BY SR, NB
CHECKED BY JL

SHEET

C9.02

7/6/19 5:39:03 PM

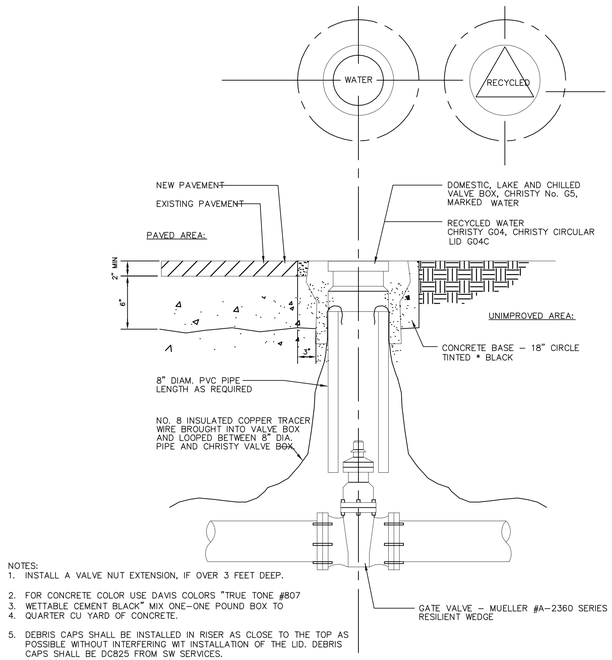

NOTES:
1. INSTALL A VALVE NUT EXTENSION, IF OVER 3 FEET DEEP.
2. FOR CONCRETE COLOR USE DAVIS COLORS "TRUE TONE #807
3. WETTABLE CEMENT BLACK" MIX ONE-ONE POUND BOX TO
4. QUARTER CU YARD OF CONCRETE.
5. DEBRIS CAPS SHALL BE INSTALLED IN RISER AS CLOSE TO THE TOP AS POSSIBLE WITHOUT INTERFERING WT INSTALLATION OF THE LID. DEBRIS CAPS SHALL BE DC825 FROM SW SERVICES.
   COLORS FOR HANDLES SHALL BE:
   BLUE – DOMESTIC WATER
   BLACK – LAKE WATER
   PURPLE – RECYCLED WATER
   GREEN – CHILLED WATER SUPPLY
   RED – CHILLED WATER RETURN.

1 GATE VALVE BOX
N.T.S.

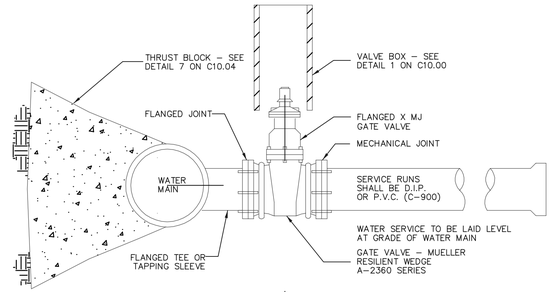

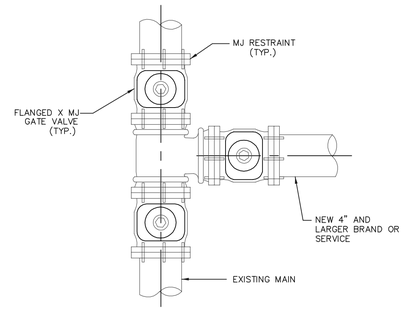

PLAN VIEW
TEE CONNECTION WITH MAIN LINE AND BRANCH VALVES

NOTE:
1. TAPPING SLEEVE CONNECTION SHALL BE REVIEWED AND APPROVED BY STANFORD UTILITIES
2. ADD CATHODIC PROTECTION WHEN SHOWN ON DRAWINGS

2 WATER SERVICES 4" & LARGER
N.T.S.

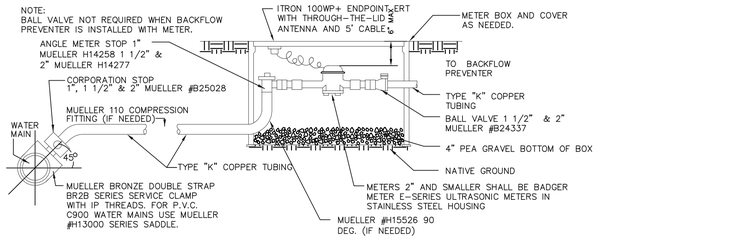

2" AND SMALLER WATER METER INSTALLATION

CHRISTY METER BOX, WITH EXTENSIONS AS REQUIRED.

3/4" x 3/4" METER	CHRISTY #B9 WITH FL9D LID "WATER"
1" METER	CHRISTY #B12 WITH B12G LID "WATER
1 1/2" OR 2" METER	CHRISTY #B36 WITH 61G70 LID "WATER"

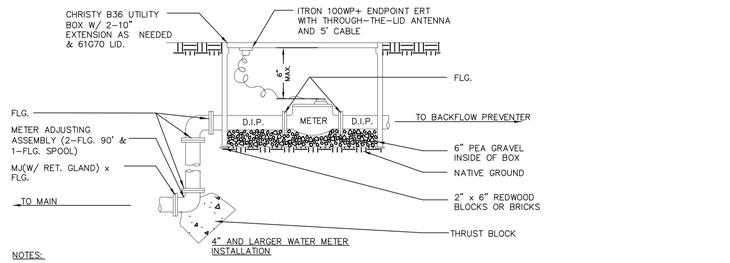

NOTES:
1. CHRISTY B36 METER BOX WITH EXTENSIONS AS REQUIRED. STEEL CHECKER PLATE LID WITH METER READING LID (61G70).
2. BADGER METER TURBO SERIES WITH RTR REGISTER AND ITRON PIT ERT STRAIGHT READING CF REGISTER
3. 6" PEA GRAVEL IN BOTTOM OF BOX.
4. IF REDUCERS ARE REQUIRED, INSTALL OUTSIDE OF BOX.
5. INSTALL FIBERGLASS ROD INSIDE OF BOX TO HOLD UP THE SMART METER COMPONENTS. FIBERGLASS ROD SHALL BE 1/2" DIAMETER AND BE APPROPRIATELY SIZED FOR THE METER BOX. NATIONAL MODEL NOS. 7659 FOR 12", 3752 FOR 18", AND 4279 FOR 36".

3 WATER METER INSTALLATION
N.T.S.

ZURN WILKINS 375 (3" – 10")

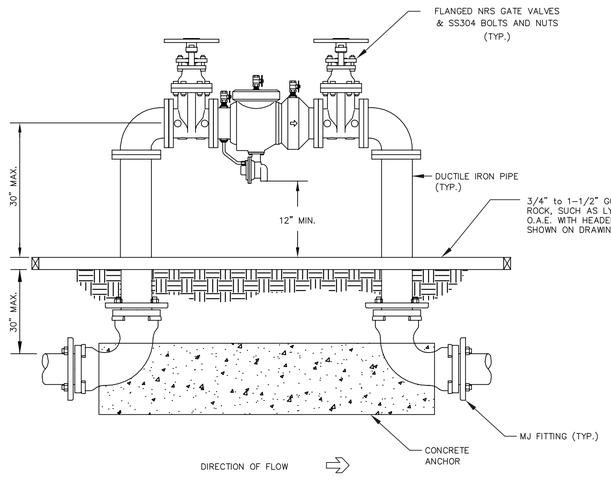

NOTES:
1. INLET AND OUTLET PIPES MAY VARY IN ELEVATION BASED ON BUILDING ENTRANCE LOCATIONS AND ELEVATIONS. CONSTRUCT THRUST BLOCKS AS REQUIRED.
2. PAINT BACKFLOW CARBON BLACK: KELLY MOORE 1245-407
3. ADD CATHODIC PROTECTION WHEN SHOWN ON DRAWINGS.
4. RESTRAIN ALL MECHANICAL JOINT FITTINGS WITH MEGA-LUG RESTRAINTS 6. LOCATION TO BE SUBMITTED FOR APPROVAL TO UNIVERSITY ARCHITECT/CAMPUS PLANNING

4 DOMESTIC WATER BACKFLOW REDUCED PRESSURE ASSY.
N.T.S.

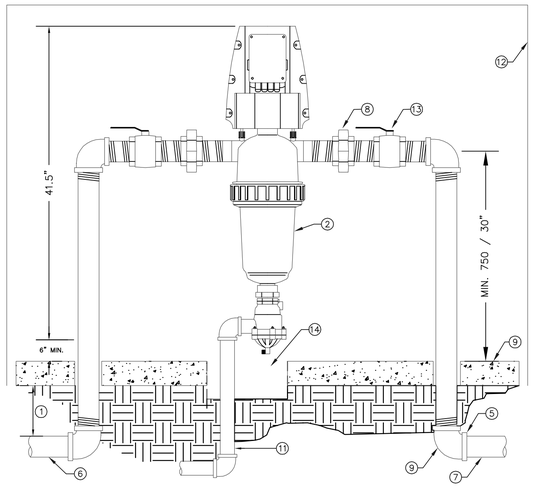

1. TRENCH DEPTH, REFER TO SPECIFICATIONS
2. AMIAD 2" TAF-750 FILTER WITH CARTRIDGE DISC.
3. THREADED BRASS PIPING AND FITTINGS EXTENDED 6" BEYOND CONCRETE PAD.
4. 6" THICK CONCRETE PAD FOR ENCLOSURE
5. PVC SCHEDULE 80 COUPLER SXT (TWO REQUIRED)
6. MINIMUM 2" WATER SOURCE, AS REQUIRED
7. 2" PVC PRESSURE SUPPLY LINE THROUGHOUT SYSTEM
8. BRASS UNION INSTALLED ON TOP NEXT TO FILTER
9. BRASS 90 DEGREE ELL (4 REQUIRED)
10. PURGE VALVE AS PART OF VALVE ASSEMBLY – 6" MINIMUM BOTTOM CLEARANCE
11. 1/2" DIAMETER PVC PIPE TO AND THROUGH THE NEAREST CUBE, CORE AND EXTEND TO DRAIN. PROVIDE ALL REQUIRED FITTINGS TO MAKE PROPER CONNECTION TO THE PURGE VALVE.
12. LE MEUR ENCLOSURE SEE FDG IR-04
13. BRASS ISOLATION BALL VALVE
14. CENTER 10" ROUND VALVE BOX AT CONCRETE PAD HEIGHT FOR REMOVAL OF FILTER CARTRIDGE SERVICE

NOTE: PROVIDE A 110 VAC POWER SOURCE FOR THE AMIAD TAF-750 LAKE WATER FILTER CONTROLLER. 110 VAC POWER PROVIDED BY OTHERS. THE LANDSCAPE CONTRACTOR SHALL COORDINATE THE POWER WIRES FROM THE SOURCE TO THE FILTER CONTROLLER AND MAKE THE FINAL HOOK-UP. ALL 100 VAC POWER WIRING SHALL BE INSTALLED PER CODE BY A LICENSED ELECTRICAL CONTRACTOR.
- EACH SITE HAS ITS OWN POC AND FILTER

5 LAKE WATER FILTER INSTALLATION
N.T.S.

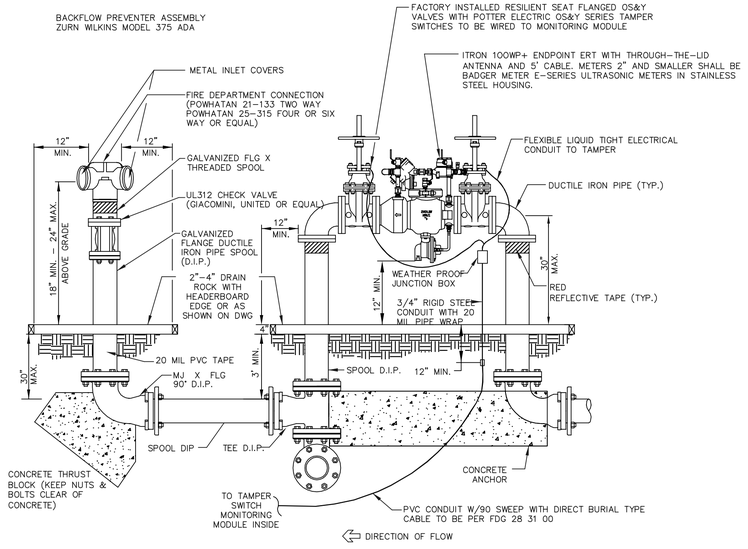

NOTES:
1. SEE STANFORD FACILITIES DESIGN GUIDELINESS, SECTION 33 10 01. FOR ADDITIONAL INFORMATION AND REQUIREMENTS FOR REDUCED PRESSURE ZONE BACKFLOW PREVENTER ASSEMBLIES.
2. INLET AND OUTLET PIPES MAY VARY IN ELEVATION BASED ON BUILDING ENTRANCE LOCATIONS AND ELEVATIONS. CONSTRUCT THRUST BLOCKS AS REQUIRED.
3. FDC SHALL BE ACCESSIBLE TO FIRE DEPARTMENT IN ACCORDANCE WITH FIRE MARSHAL.
4. BACKFLOW PREVENTER ASSEMBLY SHALL BE PAINTED WITH KELLY-MOORE/DTM 5725 WROUGHT IRON BLACK.
5. ADD CATHODIC PROTECTION WHEN SHOWN ON DRAWINGS.
6. LOCATION TO BE SUBMITTED FOR APPROVAL TO UNIVERSITY ARCHITECT/CAMPUS PLANNING AND TO SUFMO.
7. PROVIDE CODE REQUIRED SIGNAGE PER STANFORD FDG 21 13 00.

6 BACKFLOW PREVENTER ASSY. & FIRE DEPARTMENT CONNECTION
N.T.S.

CAW ARCHITECTS
455 LAMBERT AVENUE PALO ALTO, CA 94306
WWW.CAWARCHITECTS.COM • 650.328.1818 • FAX: 650.328.1888
COPYRIGHT 2017 BY CAW ARCHITECTS, INC.

WILLIAM RAWN ASSOCIATES | Architects, Inc.
10 Post Office Sq.
Suite 1010
Boston, MA 02109

STAMP

REGISTERED PROFESSIONAL ENGINEER STEVEN REYNOLDS C 77988 CIVIL STATE OF CALIFORNIA

CONSULTANTS

BKF ENGINEERS
4670 WILLOW ROAD
SUITE 250
PLEASANTON, CA 94588
(925) 396-7700
www.bkf.com

MILESTONE	DATE
ASA SUBMISSION	12/7/2020
ASA RESUBMITTAL	8/20/2021

PROJECT NAME
STANFORD UNIVERSITY
GRADUATE SCHOOL OF EDUCATION
485 & 505 LASUEN MALL
STANFORD, CA 94305

SHEET TITLE
CIVIL DETAILS

PROJECT NO. 14029
DRAWN BY SR, NB
CHECKED BY JL

SHEET
C10.00

7/6/19 5:39:03 PM

NOTE:

1. FLANGE BOLTS & NUTS SHALL BE KEPT CLEAR OF CONCRETE.
2. SEE UTILITY PLAN FOR HYDRANT LOCATION.
3. STEEL TIE RODS & CLAMPS ARE NOT ACCEPTABLE.
4. PAINT HYDRANT WHITE.
5. SEE SHEET C10.01 DETAIL 2 FOR GUARD POST REQUIREMENTS.
6. WHERE CURB IS ADJACENT TO HYDRANT, HEIGHT OF FLANGE SHALL BE 2" ABOVE CURB.
7. VERIFY HYDRANT LOCATION WITH WATER DEPARTMENT PRIOR TO INSTALLATION.
8. ADD CATHODIC PROTECTION WHEN SHOWN ON DRAWINGS

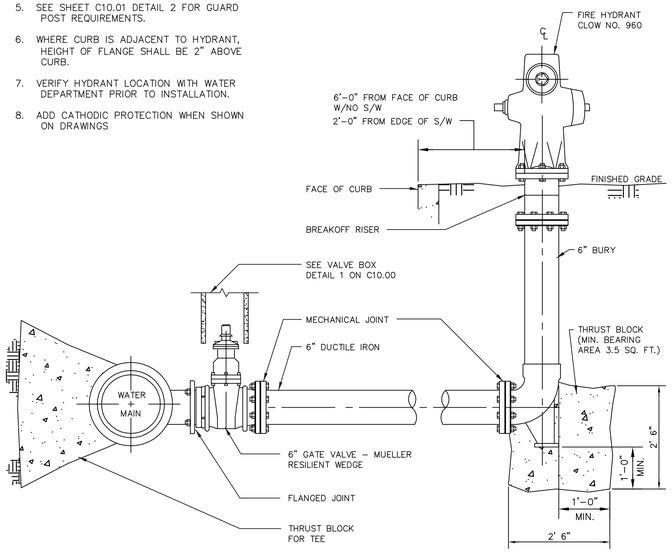

1 FIRE HYDRANT
N.T.S.

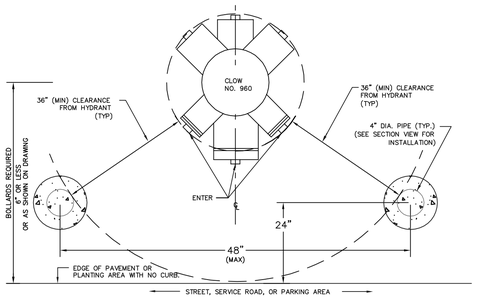

PLAN

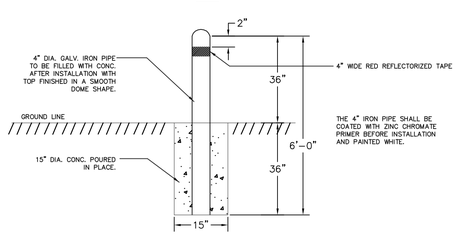

SECTION

NOTE:
1. DETAIL APPLIES TO FIRE HYDRANT AND FIRE DEPARTMENT CONNECTION (FDC)

2 FIRE HYDRANT GUARD POSTS
N.T.S.

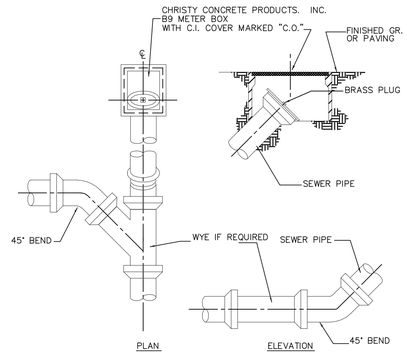

NOTES:
1. CLEANOUT PIPE TO BE SAME SIZE AND MATERIAL AS SEWER MAIN UP TO 8"

3 STORM DRAIN CLEANOUT
N.T.S.

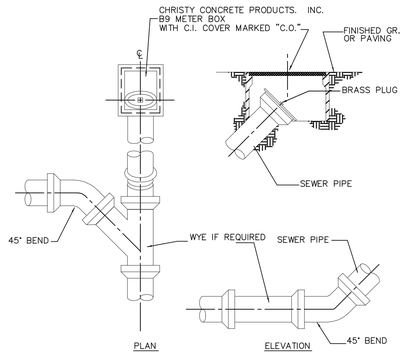

NOTES:
1. CLEANOUT PIPE TO BE SAME SIZE AND MATERIAL AS SEWER MAIN UP TO 8"

4 SANITARY SEWER CLEANOUT
N.T.S.

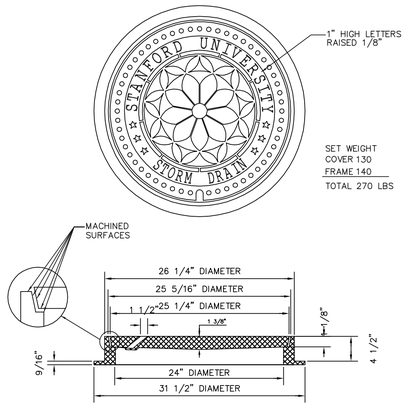

5 STORM DRAIN MANHOLE FRAME & COVER
N.T.S.

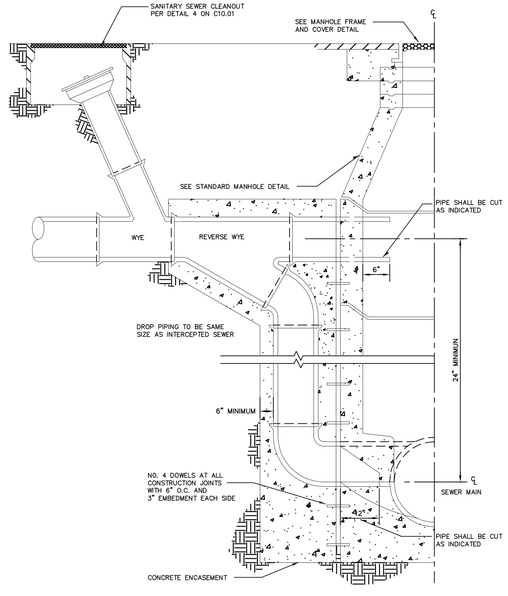

6 DROP MANHOLE CONNECTION
N.T.S.

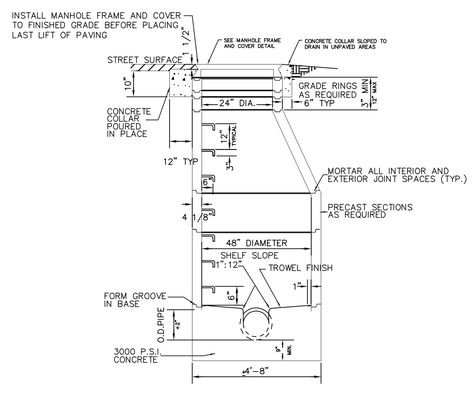

SPECIFICATIONS

1. PRECAST M.H. SECTIONS SHALL CONFORM TO APPLICABLE PROVISIONS OF ASTM C76-59T.
2. MANHOLE SECTIONS SHALL BE AS SPECIFIED IN TABLE II, WALL A, FOR 48" REINFORCED CONCRETE PIPE. REINFORCING SHALL BE CIRCULAR AS SPECIFIED FOR SINGLE CURTAIN.
3. STEPS SHALL BE 14" WIDE
4. FOR MANHOLE BASES SEE SHEET C10.01 DETAIL 8

7 SANITARY SEWER & STORM DRAIN
N.T.S.

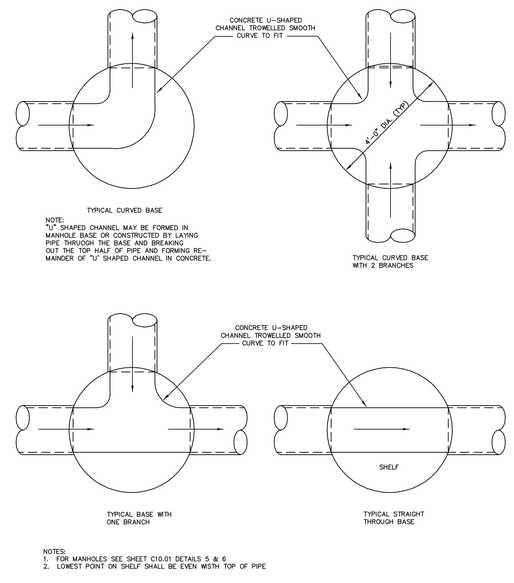

NOTES:
1. FOR MANHOLES SEE SHEET C10.01 DETAILS 5 & 6
2. LOWEST POINT ON SHELF SHALL BE EVEN WISTH TOP OF PIPE

8 STANDARD MANHOLE BASE SECTIONS
N.T.S.

CAW ARCHITECTS
455 LAMBERT AVENUE PALO ALTO, CA 94306
WWW.CAWARCHITECTS.COM • 650.328.1818 • FAX: 650.328.1888

COPYRIGHT 2017 BY CAW ARCHITECTS, INC.

WILLIAM RAWN ASSOCIATES | Architects, Inc.
10 Post Office Sq.
Suite 1010
Boston, MA 02109

STAMP

REGISTERED PROFESSIONAL ENGINEER STEVEN REYNOLDS C 77988 CIVIL STATE OF CALIFORNIA

CONSULTANTS

BKF ENGINEERS
4670 WILLOW ROAD
SUITE 250
PLEASANTON, CA 94588
(925) 396-7700
www.bkf.com

MILESTONE	DATE
ASA SUBMISSION	12/7/2020
ASA RESUBMITTAL	8/20/2021

PROJECT NAME
STANFORD UNIVERSITY
GRADUATE SCHOOL OF EDUCATION
485 & 505 LASUEN MALL
STANFORD, CA 94305

SHEET TITLE
CIVIL DETAILS

PROJECT NO. 14029
DRAWN BY SR, NB
CHECKED BY JL

SHEET
C10.01

7/6/19 5:39:03 PM

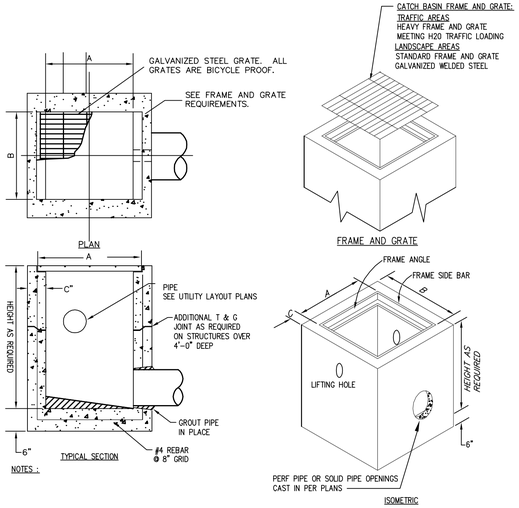

FRAME, GRATES, AND COVERS

PRECAST INLET TABLE

INLET TYPE	MODEL	A	B	C	FRAME, GRATE AND COVER TYPE
12" CATCH BASIN	1K	12"	12"	4"	HEAVY FRAME AND GRATE IN TRAFFIC AREAS, STANDARD IN LANDSCAPE AREAS
24" CATCH BASIN	2K	24"	24"	5"	HEAVY FRAME AND GRATE IN TRAFFIC AREAS, STANDARD IN LANDSCAPE AREAS
JUNCTION BOX	3K	24"	24"	5"	REINFORCED CHECKERED SOLID PLATE COVER WITH HEAVY FRAME AND GRATE

1 — PRECAST CATCH BASIN OR JUNCTION BOX
N.T.S.

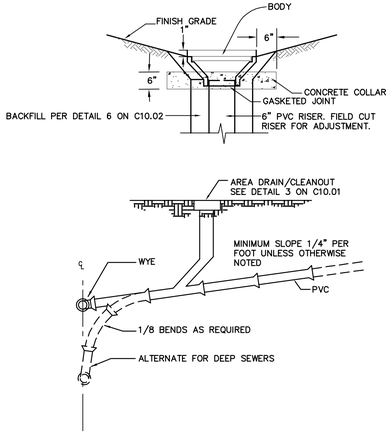

2 — NDS #6 AREA DRAIN & WYE CONNECTION
N.T.S.

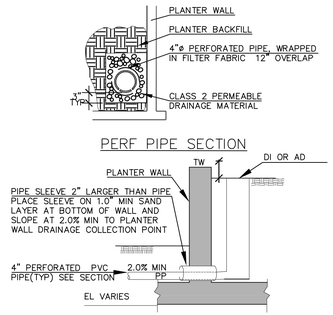

3 — PLANTER WALL DRAINAGE
N.T.S.

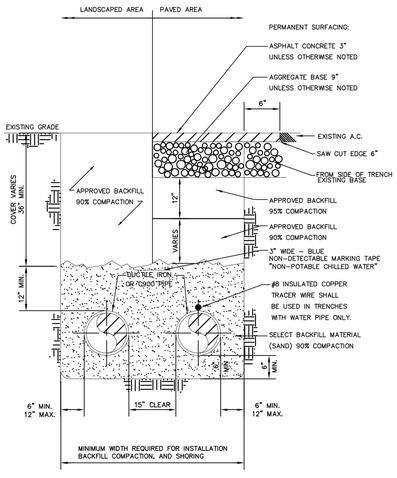

TYPICAL TRENCH SECTION

NOTE:
1. SHORING TO BE PER CAL/OSHA CONSTRUCTION SAFETY ORDERS.
2. RESTORE ALL PAVEMENT MARKINGS IN-KIND WHERE REMOVED AS PART OF TRENCHING OPERATIONS

4 — TYPICAL CHILLED WATER TRENCH SECTION
N.T.S.

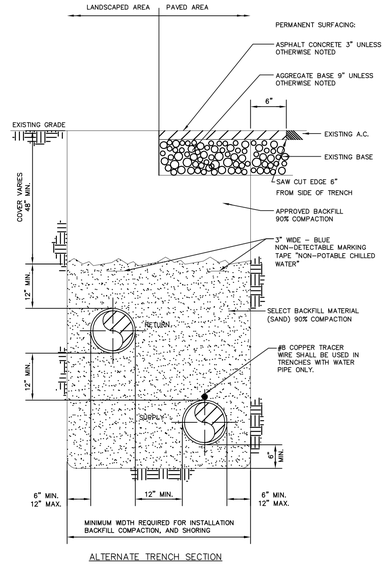

ALTERNATE TRENCH SECTION

NOTE:
1. SHORING TO BE PER CAL/OSHA CONSTRUCTION SAFETY ORDERS.
2. RESTORE ALL PAVEMENT MARKINGS IN-KIND WHERE REMOVED AS PART OF TRENCHING OPERATIONS

5 — ALTERNATE CHILLED WATER TRENCH SECTION
N.T.S.

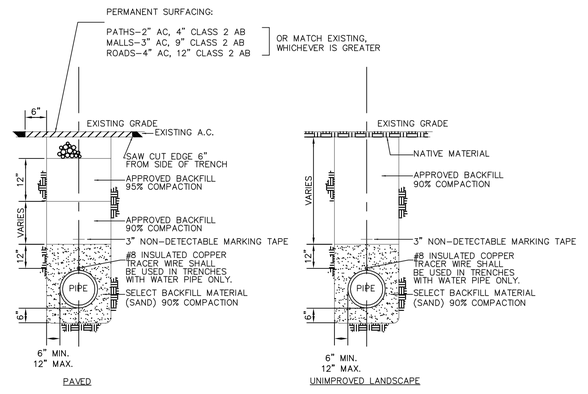

NOTES:
1. SHORING TO BE PER CAL/OSHA CONSTRUCTION SAFETY ORDERS.
2. RESTORE ALL PAVEMENT MARKINGS IN-KIND WHERE REMOVED AS PART OF TRENCHING OPERATIONS

6 — TRENCH BACKFILL AND SURFACE RESTORATION
N.T.S.

CAW ARCHITECTS
455 LAMBERT AVENUE PALO ALTO, CA 94306
WWW.CAWARCHITECTS.COM • 650.328.1818 • FAX: 650.328.1888
COPYRIGHT 2017 BY CAW ARCHITECTS, INC.

WILLIAM RAWN ASSOCIATES | Architects, Inc.
10 Post Office Sq.
Suite 1010
Boston, MA 02109

STAMP

REGISTERED PROFESSIONAL ENGINEER STEVEN REYNOLDS C 77988 CIVIL STATE OF CALIFORNIA

CONSULTANTS

BKF ENGINEERS
4670 WILLOW ROAD
SUITE 250
PLEASANTON, CA 94588
(925) 396-7700
www.bkf.com

MILESTONE	DATE
ASA SUBMISSION	12/7/2020
ASA RESUBMITTAL	8/20/2021

PROJECT NAME
STANFORD UNIVERSITY
GRADUATE SCHOOL OF EDUCATION
485 & 505 LASUEN MALL
STANFORD, CA 94305

SHEET TITLE
CIVIL DETAILS

PROJECT NO. 14029
DRAWN BY SR, NB
CHECKED BY JL

SHEET
C10.02

7/6/19 5:39:03 PM

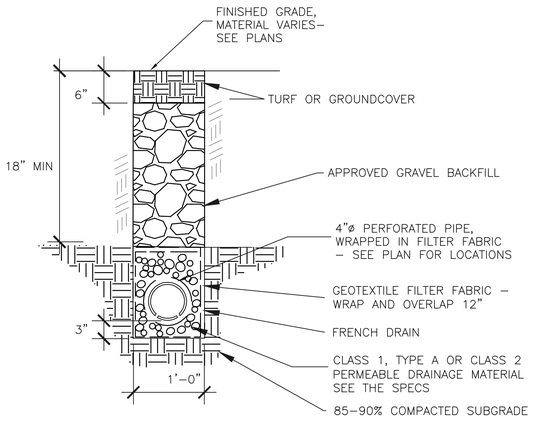

1 PERFORATED PIPE & TRENCH BACKFILL

N.T.S.

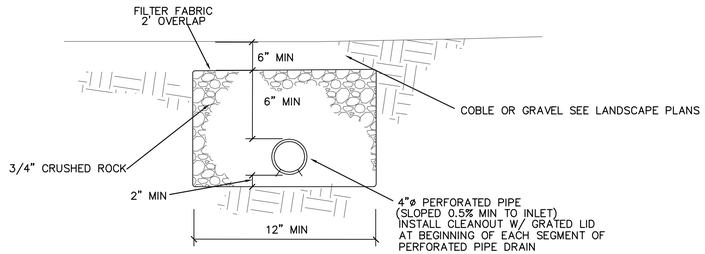

2 PERFORATED PIPE IN LANDSCAPE

N.T.S.

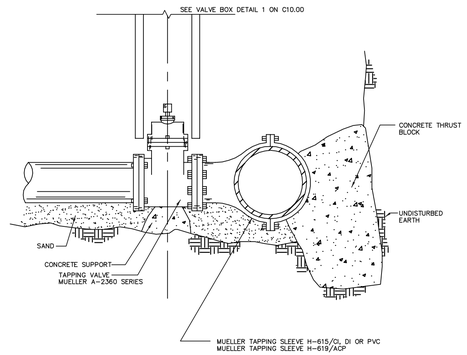

3 TAPPING SLEEVE AND VALVE

N.T.S.

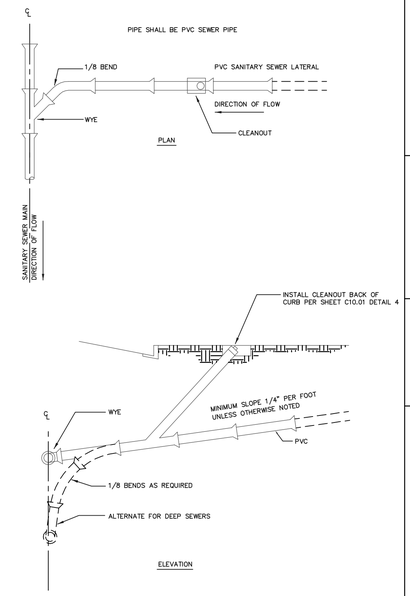

4 SANITARY SEWER LATERAL

N.T.S.

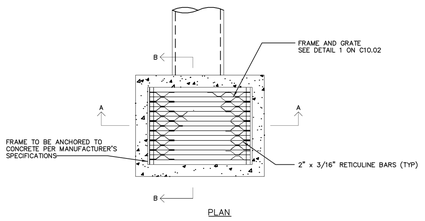

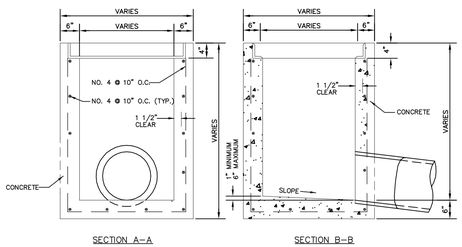

NOTES:
1. PRE-CAST CATCH BASINS SUBJECT TO APPROVAL OF STANFORD WATER DEPARTMENT AND PROJECT MANAGER.

5 CATCH BASIN

N.T.S.

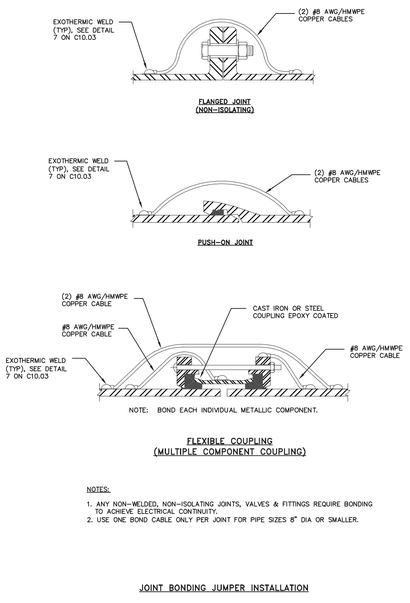

NOTES:
1. ANY NON-WELDED, NON-ISOLATING JOINTS, VALVES & FITTINGS REQUIRE BONDING TO ACHIEVE ELECTRICAL CONTINUITY.
2. USE ONE BOND CABLE ONLY PER JOINT FOR PIPE SIZES 8" DIA OR SMALLER.

JOINT BONDING JUMPER INSTALLATION

6 JOINT BONDING JUMPER INSTALLATION

N.T.S.

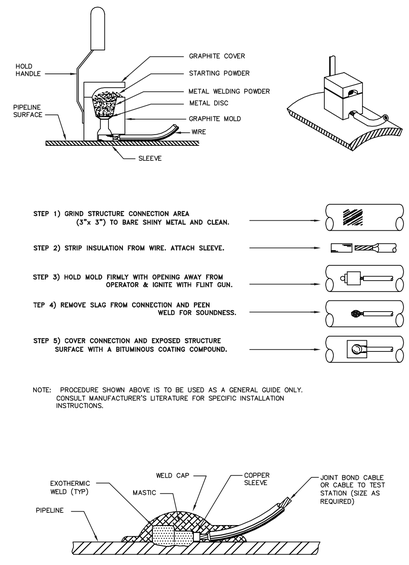

NOTE: PROCEDURE SHOWN ABOVE IS TO BE USED AS A GENERAL GUIDE ONLY. CONSULT MANUFACTURER'S LITERATURE FOR SPECIFIC INSTALLATION INSTRUCTIONS.

EXOTHERMIC WELDING

7 EXOTHERMIC WELDING

N.T.S.

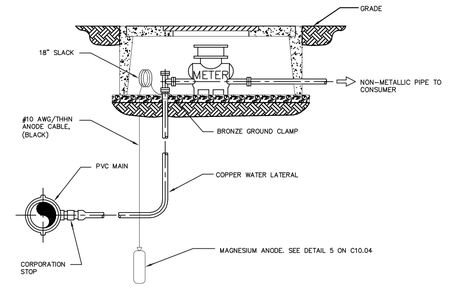

NOTES:
1. DIELECTRICALLY ISOLATE THE SUBJECT STRUCTURES FROM ALL OTHER UNDERGROUND METALLIC STRUCTURES, INCLUDING CONCRETE REINFORCEMENT REBAR.
2. UP TO 5 FITTINGS WITHIN 25 FEET OF EACH OTHER MAY BE BONDED TOGETHER.

ANODE TEST STATION – LATERAL

8 COPPER WATER SERVICE

N.T.S.

CAW ARCHITECTS
455 LAMBERT AVENUE PALO ALTO, CA 94306
WWW.CAWARCHITECTS.COM • 650.328.1818 • FAX: 650.328.1888

COPYRIGHT 2017 BY CAW ARCHITECTS, INC.

WILLIAM RAWN ASSOCIATES | Architects, Inc.
10 Post Office Sq.
Suite 1010
Boston, MA 02109

STAMP

REGISTERED PROFESSIONAL ENGINEER STEVEN REYNOLDS C 77988 CIVIL STATE OF CALIFORNIA

CONSULTANTS

BKF ENGINEERS
4670 WILLOW ROAD
SUITE 250
PLEASANTON, CA 94588
(925) 396-7700
www.bkf.com

MILESTONE	DATE
ASA SUBMISSION	12/7/2020
ASA RESUBMITTAL	8/20/2021

PROJECT NAME

STANFORD UNIVERSITY
GRADUATE SCHOOL OF EDUCATION
485 & 505 LASUEN MALL
STANFORD, CA 94305

SHEET TITLE

CIVIL DETAILS

PROJECT NO. 14029
DRAWN BY SR, NB
CHECKED BY JL

SHEET

C10.03

7/6/19 5:39:03 PM

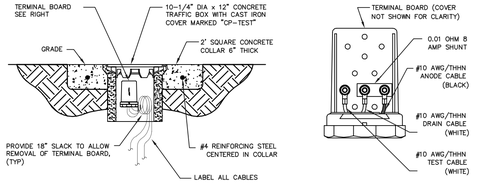

CONCRETE TRAFFIC BOX

TERMINAL BOARD

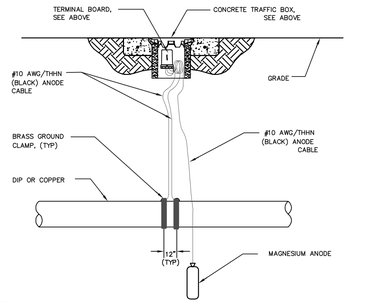

NOTES:
1. BOND ALL NON-WELDED, NON-INSULATING PIPE JOINTS PER DETAIL CP-10. USE BRASS GROUND CLAMP INSTEAD OF EXOTHERMIC WELD FOR CABLE CONNECTING TO COPPER PIPE. FOR DIP, USE EXOTHERMIC WELD.
2. DIELECTRICALLY ISOLATE THE SUBJECT STRUCTURES FROM ALL OTHER UNDERGROUND METALLIC STRUCTURES, INCLUDING CONCRETE REINFORCEMENT REBAR.
3. PIPE SHOULD BE POLYETHYELENE WRAPPED PER AWWA C105.

ANODE TEST STATION – DIP & COPPER SERVICE LATERAL PIPE

1 ANODE TEST STATION– DIP & COPPER SERVICE LATERAL PIPE
N.T.S.

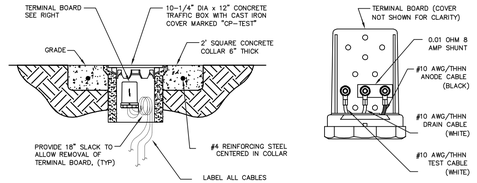

CONCRETE TRAFFIC BOX

TERMINAL BOARD

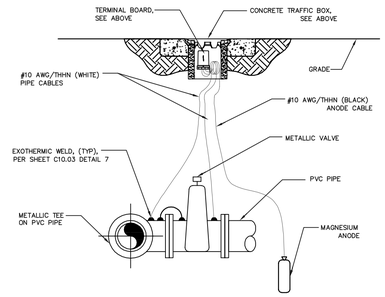

NOTES:
1. DIELECTRICALLY ISOLATE THE SUBJECT STRUCTURES FROM ALL OTHER UNDERGROUND METALLIC STRUCTURES, INCLUDING CONCRETE REINFORCEMENT REBAR.
2. UP TO 5 FITTINGS WITHIN 25 FEET OF EACH OTHER MAY BE BONDED TOGETHER.

ANODE TEST STATION – TEE & VALVE

2 ANODE TEST STATION– TEE & VALVE
N.T.S.

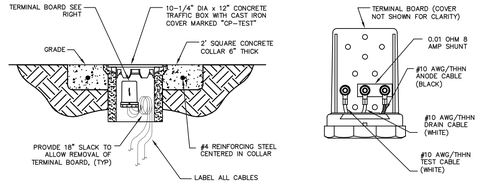

CONCRETE TRAFFIC BOX

TERMINAL BOARD

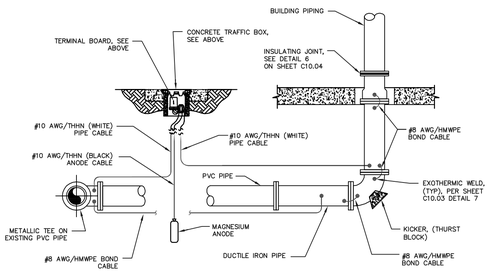

NOTES:
1. IF REMOTE FITTING IS NOT PRESENT, WELD SECOND WHITE CABLE TO HORIZONTAL DIP SPOOL.
2. DIELECTRICALLY ISOLATE THE SUBJECT STRUCTURES FROM ALL OTHER UNDERGROUND METALLIC STRUCTURES, INCLUDING CONCRETE REINFORCEMENT REBAR.
3. UP TO 5 FITTINGS WITHIN 25 FEET OF EACH OTHER MAY BE BONDED TOGETHER.

ANODE TEST STATION – SPRINKLER RISER

3 ANODE TEST STATION– SPRINKLER RISER
N.T.S.

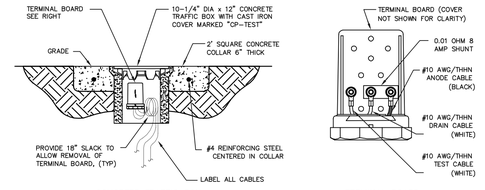

CONCRETE TRAFFIC BOX

TERMINAL BOARD

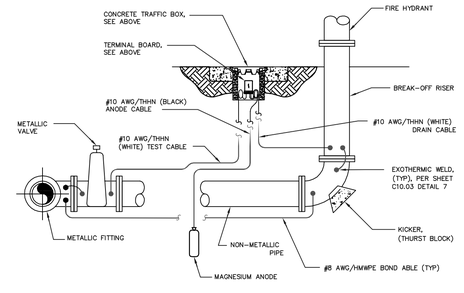

NOTES:
1. DIELECTRICALLY ISOLATE THE SUBJECT STRUCTURES FROM ALL OTHER UNDERGROUND METALLIC STRUCTURES, INCLUDING CONCRETE REINFORCEMENT REBAR.
2. UP TO 5 FITTINGS WITHIN 25 FEET OF EACH OTHER MAY BE BONDED TOGETHER.

ANODE TEST STATION – FIRE HYDRANT

4 ANODE TEST STATION– FIRE HYDRANT
N.T.S.

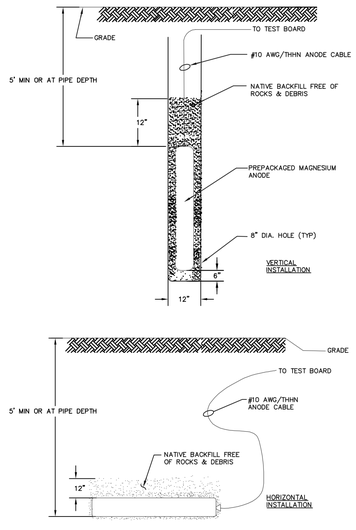

MAGNESIUM ANODE INSTALLATION

5 MAGNESIUM ANODE INSTALLATION
N.T.S.

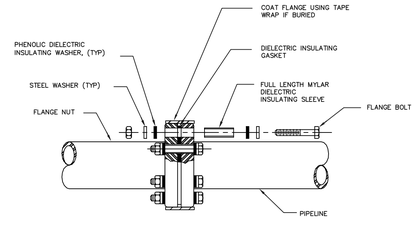

DIELECTRIC INSULATING JOINT

6 DIELECTRIC INSULATING JOINT
N.T.S.

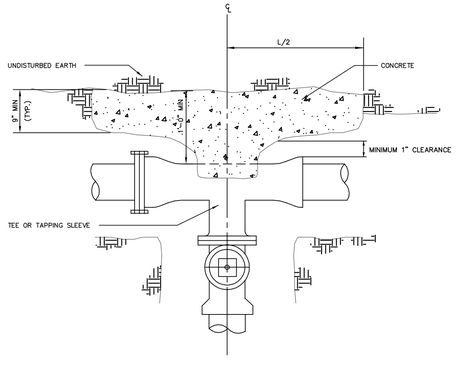

PLAN

NOTES:
1. FLANGES, BOLTS, AND NUTS SHALL BE KEPT CLEAR OF CONCRETE.
2. CENTER BEARING AREA ON PIPE ℄ AND FORCE LINE.

BLOCKING FOR PIPE TEES		
SIDE OUTLET PIPE SIZE	BEARING (S.F.)	L & H
6"	3	1'9" x 1'9"
8"	5	2'3" x 2'3
10"	9	3'0" x 3'0"
12"	12	3'5" x 3'5"

7 THRUST BLOCK FOR TEES
N.T.S.

CAW ARCHITECTS
455 LAMBERT AVENUE PALO ALTO, CA 94306
WWW.CAWARCHITECTS.COM • 650.328.1818 • FAX: 650.328.1888
COPYRIGHT 2017 BY CAW ARCHITECTS, INC.

WILLIAM RAWN ASSOCIATES | Architects, Inc.
10 Post Office Sq.
Suite 1010
Boston, MA 02109

STAMP

REGISTERED PROFESSIONAL ENGINEER STEVEN REYNOLDS C 77988 CIVIL STATE OF CALIFORNIA

CONSULTANTS

BKF ENGINEERS
4670 WILLOW ROAD
SUITE 250
PLEASANTON, CA 94588
(925) 396-7700
www.bkf.com

MILESTONE	DATE
ASA SUBMISSION	12/7/2020
ASA RESUBMITTAL	8/20/2021

PROJECT NAME
STANFORD UNIVERSITY
GRADUATE SCHOOL OF EDUCATION
485 & 505 LASUEN MALL
STANFORD, CA 94305

SHEET TITLE
CIVIL DETAILS

PROJECT NO. 14029
DRAWN BY SR, NB
CHECKED BY JL

SHEET
C10.04

7/6/19 5:39:03 PM

485
03-300
SCHOOL OF
EDUCATION
485 LASUEN MALL

505
03-050
BARNUM
CENTER
505 LASUEN MALL

LASUEN MALL

RICOTT HALL
(LANGUAGE CORNER)

CENTER FOR
ENTREPRENEURIAL STUDIES

MATCHLINE SEE SHEET C1.12

POTHOLE AREA #1
POTHOLE AREA #2
POTHOLE AREA #3
POTHOLE AREA #4
POTHOLE AREA #5
POTHOLE AREA #6
POTHOLE AREA #7
POTHOLE AREA #8
POTHOLE AREA #9
POTHOLE AREA #10

GRAPHIC SCALE

20 0 10 20 40 80

(IN FEET)
1 inch = 20 ft.

FOR REFERENCE ONLY SHEET

CAW ARCHITECTS

455 LAMBERT AVENUE PALO ALTO, CA 94306
WWW.CAWARCHITECTS.COM • 650.328.1818 • FAX: 650.328.1888

COPYRIGHT 2017 BY CAW ARCHITECTS, INC.

WILLIAM RAWN ASSOCIATES | Architects, Inc.
10 Post Office Sq.
Suite 1010
Boston, MA 02109

STAMP

REGISTERED PROFESSIONAL ENGINEER
STEVEN REYNOLDS
C 77988
CIVIL
STATE OF CALIFORNIA

CONSULTANTS

BKF ENGINEERS
4670 WILLOW ROAD
SUITE 250
PLEASANTON, CA 94588
(925) 396-7700
www.bkf.com

MILESTONE	DATE
ASA SUBMISSION	12/7/2020
ASA RESUBMITTAL	8/20/2021

PROJECT NAME

STANFORD UNIVERSITY
GRADUATE SCHOOL OF EDUCATION
485 & 505 LASUEN MALL
STANFORD, CA 94305

SHEET TITLE

EXISTING CONDITIONS
POTHOLE INFORMATION
EXHIBIT

PROJECT NO. 14029
DRAWN BY SR, NB
CHECKED BY JL

SHEET

PH1.11

7/6/19 5:39:03 PM

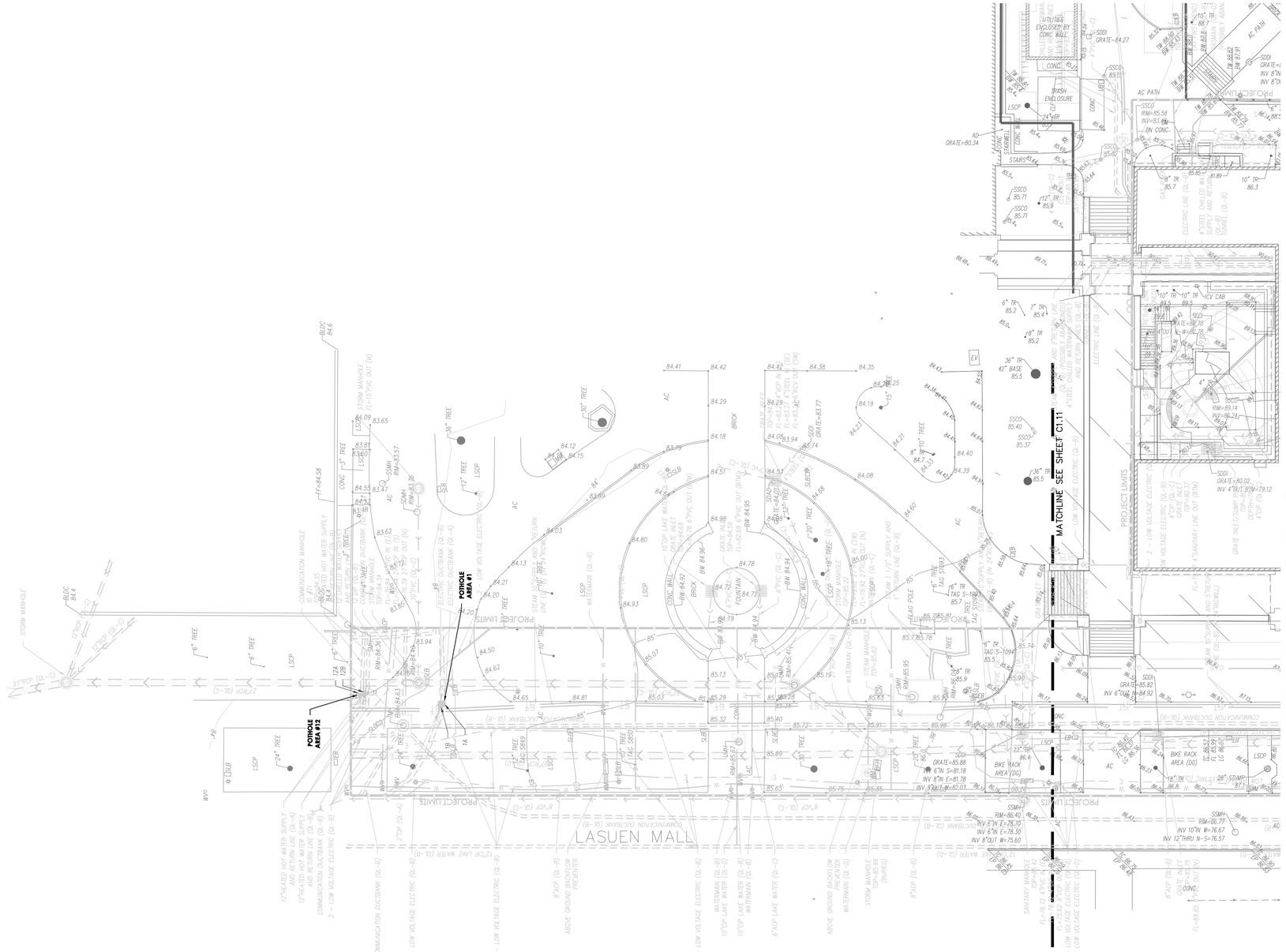

FOR REFERENCE ONLY SHEET

CAW ARCHITECTS
455 LAMBERT AVENUE PALO ALTO, CA 94306
WWW.CAWARCHITECTS.COM • 650.328.1818 • FAX: 650.328.1888

COPYRIGHT 2021 BY CAW ARCHITECTS, INC.

WILLIAM RAWN ASSOCIATES | Architects, Inc.
10 Post Office Sq.
Suite 1010
Boston, MA 02109

STAMP

REGISTERED PROFESSIONAL ENGINEER STEVEN REYNOLDS C77988 CIVIL STATE OF CALIFORNIA

CONSULTANTS

BKF ENGINEERS
4670 WILLOW ROAD
SUITE 250
PLEASANTON, CA 94588
(925) 396-7700
www.bkf.com

MILESTONE	DATE
ASA SUBMISSION	12/7/2020
ASA RESUBMITTAL	8/20/2021

PROJECT NAME

STANFORD UNIVERSITY
GRADUATE SCHOOL OF EDUCATION
485 & 505 LASUEN MALL
STANFORD, CA 94305

SHEET TITLE

EXISTING CONDITIONS
POTHOLE INFORMATION
EXHIBIT

PROJECT NO. 14029
DRAWN BY SR, NB
CHECKED BY JL

SHEET

PH1.12

7/6/19 5:39:03 PM

STANFORD UNIVERSITY TREE AND SHRUB PROTECTION GUIDELINES

1. WE HAVE STRICT REQUIREMENTS WHICH INCLUDE THE POINTS LISTED BELOW AND ADDITIONAL PROCEDURES AS DETAILED IN THE FDG SPECIFICATIONS GUIDELINE 01 56 39 TREE AND PLANT PROTECTION.
2. THE ROOT ZONE OF ALL TREES MUST BE PROTECTED ON ALL CONSTRUCTION PROJECTS, AS DESCRIBED BELOW. A TREE'S ROOT ZONE IS DEFINED AS–LISTED IN DEFINITIONS 1.3B.
3. A STANFORD GROUNDS CERTIFIED ARBORIST SHALL BE CONTACTED TO EVALUATE ALL WORK WITHIN ANY TREES ROOT ZONES.
4. ALL TREES TO REMAIN ON A PROJECT SHALL HAVE PROTECTIVE FENCING INSTALLED PER THE TREE PROTECTION DRAWING INCLUDED IN THE PLAN SET.
5. PROTECTIVE FENCING SHALL BE CHAIN LINK ON SECURE FOOTINGS, OR IMBEDDED AS REQUIRED BY THE CAMPUS PLANNING AND DESIGN OFFICE OR A STANFORD GROUNDS CERTIFIED ARBORIST, THAT WILL NOT FALL OVER ONTO TREES.
6. PROTECTIVE FENCING SHALL BE PLACED AT THE OUTER EDGE OF THE ROOT ZONE, AS PER TREE PROTECTION PLAN L1.01, AND WHEREVER POSSIBLE AS SHOWN ON THE TREE PROTECTION DRAWING. IF PROJECT CONSTRAINTS DO NOT ALLOW FOR FENCING AT THE OUTER EDGE OF THE ROOT ZONE, FENCING MUST BE PLACED AS CLOSE TO THIS AS POSSIBLE AND APPROVED AFTER IT IS IN PLACE BY A STANFORD UNIVERSITY GROUNDS CERTIFIED ARBORIST.
7. LAYDOWN, STAGING AND PARKING AREAS SHALL BE APPROVED BY THE STANFORD UNIVERSITY ARCHITECT/CAMPUS PLANNING DEPARTMENT AND SHALL BE SHOWN ON THE PLANS IF WITHIN THE PROJECT LIMIT AREA, OR ON THE CONSTRUCTION LOGISTICS PLAN IF OUTSIDE THE PROJECT LIMIT AREA. ALL TREE PROTECTION GUIDELINES APPLY TO TREES IN LAYDOWN, STAGING AND PARKING AREAS AS WELL AS TO TREES WITHIN THE PROJECT LIMITS.
8. CONSTRUCTION MATERIALS/EQUIPMENT/PERSONAL VEHICLES SHALL NOT BE STORED, PARKED OR TEMPORARILY PLACED IN THE ROOT ZONE OF ANY TREES. NOTHING SHALL BE STORED OR PLACED TEMPORARILY WITHIN PROTECTIVE FENCING, TO AVOID SOIL COMPACTION AND SOIL CONTAMINATION UNDER TREES. ROOT ZONES OF TREES SHALL NOT BE DRIVEN OVER. PROVIDE ALTERNATIVE ROUTES FOR CONSTRUCTION TRAFFIC OF ANY KIND INCLUDING CARS, PEOPLE, TRACTORS, EQUIPMENT, CRANES, OR ANY OTHER TRAFFIC AND ALL STAGING OR STORAGE AREAS.
9. PROTECT OVERHANGING TREE CANOPIES FROM CONSTRUCTION DAMAGE. IF DRIVE AISLES ARE ANTICIPATED UNDER LOW CANOPIES CALL FOR AN EVALUATION BY A STANFORD GROUNDS CERTIFIED ARBORIST TO DETERMINE APPROPRIATE MEASURES.
10. THERE SHALL BE NO GRADE CHANGE WITHIN A MINIMUM OF TEN FEET OF THE TRUNK OF EXISTING TREES, AND PREFERABLY NONE WITHIN THE ENTIRE ROOT ZONE. NATIVE OAKS ARE PARTICULARLY SENSITIVE TO GRADE CHANGES.
11. NO RINSING, CLEANING EQUIPMENT OR DUMPING CONSTRUCTION LIQUID MATERIALS SHALL BE ALLOWED IN THE TREE ROOT ZONE, OR IN AN AREA THAT DRAINS INTO THE ROOT ZONE. CARE SHALL BE TAKEN IN CLEANING UP EQUIPMENT. THERE SHALL BE NO STORAGE OF DUMPSTERS OR ACCUMULATED DEBRIS FROM DEMOLITION ON OR AROUND THE ROOT ZONES OF EXISTING TREES AND SHRUBS.
12. EXISTING TREES SHALL BE MONITORED WEEKLY AND IRRIGATED AS NEEDED DURING THE COURSE OF CONSTRUCTION.
13. NO LIME OR OTHER SOIL TREATMENT SHALL BE APPLIED WITHOUT THE CONSENT OF A STANFORD GROUNDS CERTIFIED ARBORIST.
14. ALL TRENCHING SHALL CONFORM TO THE FOLLOWING GUIDELINES.
    a. A STANFORD GROUNDS CERTIFIED ARBORIST IS REQUIRED TO BE PRESENT TO SUPERVISE ANY TRENCHING, DIGGING OR EXCAVATION OF ANY KIND WITHIN A TREES' ROOT ZONE.
    b. ROOTS LARGER THAN 2 INCHES IN DIAMETER SHALL NOT BE SEVERED WITHOUT CALLING A STANFORD GROUNDS CERTIFIED ARBORIST FOR CUTTING OR REVIEW.
    c. TUNNELING OR BORING UNDER ROOTS RATHER THAN PRUNING IS PREFERRED.
    d. DIGGING WITHIN A TREE'S ROOT ZONE SHALL BE AVOIDED. IF IT IS NECESSARY, HAND DIGGING SHALL BE USED FOR ANY TRENCHING WITHIN THE TREE'S ROOT ZONE UNLESS OTHERWISE APPROVED BY A STANFORD GROUNDS CERTIFIED ARBORIST.
    e. ALL ROOTS THAT NEED TO BE CUT SHALL BE PERPENDICULAR PRUNED CLEANLY, NOT TORN.

THE PRECEDING GUIDELINES SHALL BE CONSIDERED MINIMUM REQUIREMENTS. THE GREATER THE DISTANCE OF TREE PROTECTION PROVIDED THE GREATER THE INSTANCE OF TREE SUCCESS IN CONSTRUCTION AREAS.

TREE NOTES

1. CONTRACTOR SHALL TAG ALL TREES TO BE REMOVED, RELOCATED AND PROTECTED. CONTRACTOR SHALL REVIEW ALL TREES WITH THE OWNER AND THE LANDSCAPE ARCHITECT PRIOR TO REMOVAL & RELOCATION.
2. PLEASE CONTACT A STANFORD ARBORIST TO BE PRESENT FOR NECESSARY ROOT EXCAVATION, DURING THE REMOVAL OF EXISTING PARKING LOT, CURB–PERIMETERS, SIDEWALKS AND OR AGGREGATE PATHWAYS, WHERE ANY TRENCHING MAY SEVER TREE ROOTS. THERE ARE MANY ESTABLISHED TREES IN NARROW PLANTING AREAS AND THESE TREE ROOTS HAVE GROWN NEXT TO OR UNDER SUCH CONCRETE, AGGREGATE WALK WAYS, AND PAST CURBS AND INTO THE PARKING LOT PERIMETERS. STANFORD ARBORIST'S ARE REQUIRED TO OVERSEE CONSTRUCTION WORK THAT IS DONE UNDER TREES, INCLUDING ROOT PRUNING.
3. THIS IS A LIST OF STANFORD UNIVERSITY ARBORISTS:
   MICHAEL GLADDEN (650) 313–9436 MGLADDEN@STANFORD.EDU
4. ALL EXISTING LANDSCAPED AREA AND IRRIGATION ARE TO BE RESTORED AND OPERATIONAL WITH PRIOR APPROVAL OF THE STANFORD UNIVERSITY ARCHITECT AND PLANNING OFFICE AND STANFORD GROUNDS SERVICES.
5. ONLY HAND EXCAVATION IS TO BE DONE FOR GRUBBING UNDERNEATH THE CANOPIES OR WITHIN ANY PROTECTED EXISTING TREES' ROOTZONE. FOLLOW ALL STANFORD UNIVERSITY TREE AND SHRUB PROTECTION GUIDELINES (AS SHOWN ABOVE) AND REFER TO THE FDG DOCUMENTATION.
6. COORDINATE WITH STANFORD ARBORIST PRIOR TO BEGINNING CONSTRUCTION IF PRUNING TO EXISTING TREES WILL BE NECESSARY IN ORDER TO COMPLETE THE REQUIRED WORK.

TREE REMOVAL LIST

NUMBER	BOTANICAL NAME	COMMON NAME	CALIPER	LOCATION	BARNUM ASA
28	PARROTIA PERSICA	PERSIAN IRONWOOD	3.5"	SUNKEN COURTYARD	N
29	MAGNOLIA SOULANGEANA	SAUCER MAGNOLIA	6"	SUNKEN COURTYARD	N
30	LIQUIDAMBAR STYRACIFLUA	SWEETGUM	11.5"	SUNKEN COURTYARD	N
31	LIQUIDAMBAR STYRACIFLUA	SWEETGUM	15.5"	SUNKEN COURTYARD	N
32	LIQUIDAMBAR STYRACIFLUA	SWEETGUM	9.5"	SUNKEN COURTYARD	N
33	LIQUIDAMBAR STYRACIFLUA	SWEETGUM	11.5"	SUNKEN COURTYARD	N
39	LIQUIDAMBAR STYRACIFLUA	SWEETGUM	11"	ADJACENT TO BUILDING FOOTPRINT	N
40	LIQUIDAMBAR STYRACIFLUA	SWEETGUM	10.5"	ADJACENT TO BUILDING FOOTPRINT	N
46	EUCALYPTUS SIDEROXYLON	RED IRONBARK	17"	ADJACENT TO BUILDING FOOTPRINT	N
47	EUCALYPTUS SIDEROXYLON	RED IRONBARK	29"	ADJACENT TO BUILDING FOOTPRINT	N
64	CEDRUS DEODARA	DEODAR CEDAR	38.5"	ADJACENT TO BUILDING FOOTPRINT	N
70	PINUS PINEA	ITALIAN STONE PINE	28.5"	ADJACENT TO BUILDING FOOTPRINT	N
78	MALUS SP.	CRABAPPLE	1.5"	ADJACENT TO BUILDING FOOTPRINT	Y
79	MALUS SP.	CRABAPPLE	1.5"	ADJACENT TO BUILDING FOOTPRINT	Y
80	HESPEROCYPARIS MACROCARPA	MONTEREY CYPRESS	28.5"	ADJACENT TO BUILDING FOOTPRINT	Y
81	HESPEROCYPARIS MACROCARPA	MONTEREY CYPRESS	5.5"	ADJACENT TO BUILDING FOOTPRINT	Y
83	HESPEROCYPARIS MACROCARPA	MONTEREY CYPRESS	13.5"	ADJACENT TO BUILDING FOOTPRINT	Y
84	CEDRUS ATLANTICA	ATLAS CEDAR	23"	ADJACENT TO BUILDING FOOTPRINT	Y
86	ARBUTUS 'MARINA'	MARINA MADRONE	6"	ADJACENT TO BUILDING FOOTPRINT	N
87	GINGKO BILOBA	MAIDENHAIR TREE	16"	S. BUILDING FOOTPRINT	N
88	QUERCUS AGRIFOLIA	COAST LIVE OAK	36.5"	ADJACENT TO BUILDING FOOTPRINT	Y
90	ERIOBOTRYA JAPONICA	JAPANESE LOQUAT	4.5"	EXISTING CENTRAL COURTYARD	Y
91	ERIOBOTRYA JAPONICA	JAPANESE LOQUAT	6"	EXISTING CENTRAL COURTYARD	Y
92	ERIOBOTRYA JAPONICA	JAPANESE LOQUAT	6.5"	EXISTING CENTRAL COURTYARD	Y
93	ERIOBOTRYA JAPONICA	JAPANESE LOQUAT	6"	EXISTING CENTRAL COURTYARD	Y
94	ERIOBOTRYA JAPONICA	JAPANESE LOQUAT	6"	EXISTING CENTRAL COURTYARD	Y
95	ERIOBOTRYA JAPONICA	JAPANESE LOQUAT	6.5"	EXISTING CENTRAL COURTYARD	Y
96	ERIOBOTRYA JAPONICA	JAPANESE LOQUAT	4.5"	EXISTING CENTRAL COURTYARD	Y
97	QUERCUS AGRIFOLIA	COAST LIVE OAK	12"	ADJACENT TO BUILDING FOOTPRINT	Y
99	ACER NEGUNDO 'FLAMINGO'	FLAMINGO BOX ELDER	9.5"	EXISTING CENTRAL COURTYARD	Y
100	ACER NEGUNDO 'FLAMINGO'	FLAMINGO BOX ELDER	10.5"	EXISTING CENTRAL COURTYARD	Y
101	ACER NEGUNDO 'FLAMINGO'	FLAMINGO BOX ELDER	9.5"	EXISTING CENTRAL COURTYARD	Y
102	ERIOBOTRYA JAPONICA	JAPANESE LOQUAT	14"	EXISTING CENTRAL COURTYARD	N
103	ERIOBOTRYA JAPONICA	JAPANESE LOQUAT	10"	EXISTING CENTRAL COURTYARD	N
104	ERIOBOTRYA JAPONICA	JAPANESE LOQUAT	10"	EXISTING CENTRAL COURTYARD	N
105	ERIOBOTRYA JAPONICA	JAPANESE LOQUAT	18.5"	EXISTING CENTRAL COURTYARD	N
106	ERIOBOTRYA JAPONICA	JAPANESE LOQUAT	1.5"	EXISTING CENTRAL COURTYARD	N
107	ERIOBOTRYA JAPONICA	JAPANESE LOQUAT	14.5"	EXISTING CENTRAL COURTYARD	N
108	ERIOBOTRYA JAPONICA	JAPANESE LOQUAT	10"	EXISTING CENTRAL COURTYARD	N
110	BETULA UTILIS VAR.JACQUEMONTII	HIMALAYAN BURCH	3"	EXISTING CENTRAL COURTYARD	N
118	ACER NEGUNDO 'FLAMINGO'	FLAMINGO BOX ELDER	6"	EXISTING CENTRAL COURTYARD	N
119	ACER NEGUNDO 'FLAMINGO'	FLAMINGO BOX ELDER	5.5"	EXISTING CENTRAL COURTYARD	N
120	ACER NEGUNDO 'FLAMINGO'	FLAMINGO BOX ELDER	5.5"	EXISTING CENTRAL COURTYARD	N
1004	GINGKO BILOBA	MAIDENHAIR TREE	4"	FIRE LANE TURN AROUND	
1005	GINGKO BILOBA	MAIDENHAIR TREE	4"	FIRE LANE TURN AROUND	
1006	GINGKO BILOBA	MAIDENHAIR TREE	5"	FIRE LANE TURN AROUND	
1007	GINGKO BILOBA	MAIDENHAIR TREE	4"	FIRE LANE TURN AROUND	

NOTE: TREES NOTED TO BE REMOVED MAY BE RELOCATED AT STANFORD PROJECT MANAGER'S DISCRETION

TREE RELOCATION LIST

NUMBER	BOTANICAL NAME	COMMON NAME	CALIPER	PROPOSED LOCATION	BARNUM ASA
85	GINGKO BILOBA	MAIDENHAIR TREE	4"	MARY BELL FLOYD GARDEN	Y
89	PHOENIX CANARIENSIS	CANARY ISLAND DATE PALM	36"	SOUTH COURTYARD	N
109	BETULA UTILIS VAR. JACQUEMONTII	HIMALAYAN BIRCH	5.5"	SUNKEN COURTYARD	N
111	BETULA UTILIS VAR. JACQUEMONTII	HIMALAYAN BIRCH	4"	SUNKEN COURTYARD	N
112	BETULA UTILIS VAR. JACQUEMONTII	HIMALAYAN BIRCH	4"	SUNKEN COURTYARD	N
113	BETULA UTILIS VAR. JACQUEMONTII	HIMALAYAN BIRCH	5.5"	SUNKEN COURTYARD	N
114	BETULA UTILIS VAR. JACQUEMONTII	HIMALAYAN BIRCH	5.5"	SUNKEN COURTYARD	N
115	BETULA UTILIS VAR. JACQUEMONTII	HIMALAYAN BIRCH	4.5"	SUNKEN COURTYARD	N
116	BETULA UTILIS VAR. JACQUEMONTII	HIMALAYAN BIRCH	4"	SUNKEN COURTYARD	N
117	BETULA UTILIS VAR. JACQUEMONTII	HIMALAYAN BIRCH	3"	SUNKEN COURTYARD	N
S1008	GINGKO BILOBA	MAIDENHAIR TREE	5"	MARY BELL FLOYD GARDEN	

CAW ARCHITECTS
455 LAMBERT AVENUE PALO ALTO, CA 94306
WWW.CAWARCHITECTS.COM • 650.328.1818 • FAX: 650.328.1888

COPYRIGHT 2021 BY CAW ARCHITECTS, INC.

WILLIAM RAWN ASSOCIATES | Architects, Inc.
10 Post Office Sq.
Suite 1010
Boston, MA 02109

STAMP

LICENSED LANDSCAPE ARCHITECT
JOHN L. WONG
No. 1758
Signature
10/21/21
Renewal Date
08/20/21
Date
STATE OF CALIFORNIA

CONSULTANTS

swa

2200 Bridgeway
Sausalito, California
94965-1750
United States
www.swagroup.com
+1.415.332.5100 o

MILESTONE	DATE
ASA SUBMISSION	12.07.2020
ASA RESUBMITTAL	08.20.2021

PROJECT NAME

NORTH BUILDING
STANFORD UNIVERSITY
GRADUATE SCHOOL
OF EDUCATION
485 LASUEN MALL
STANFORD, CA 94305

SHEET TITLE

DEMOLITION, TREE PROTECTION, REMOVAL AND RELOCATION NOTES

PROJECT NO. STFS801
DRAWN BY X. KUANG, H. ZHAO
CHECKED BY W. HYNES

SHEET

L1.00

(4) EVERGREEN ELMS TO REMAIN
2 (E) 5" GINGKO TO BE RELOCATED
2 (E) 10" EUCALYPTUS TO REMAIN
2 (E) 4" GINGKO TO BE RELOCATED
11.5" (E) SAWLEAF ZELKOVA TO REMAIN
2 (E) 10" AMERICAN SWEETGUM TO REMAIN
2 (E) 4" GINGKO TO BE REMOVED
27.5" (E) FREMONT COTTONWOOD TO REMAIN
10.5" (E) SAWLEAF ZELKOVA TO REMAIN
STAIR DEMOLITION S.A.D.
(2) EUCALYPTUS TO BE REMOVED
5 (E) EUCALYPTUS TO REMAIN
(2) AMERICAN SWEETGUMS TO BE REMOVED
REMOVE EXISTING IRRIGATION CONTROLLER, CONFIRM REQUIRED STATIONS WITH GROUNDS AND COORDINATE RELOCATION
STAIR AND WALL DEMOLITION S.A.D.
(7) LOQUAT TREES TO BE REMOVED
(3) 6" BOXELDER MAPLES TO BE REMOVED
(8) HIMALAYAN BIRCHES TO BE RELOCATED
PROTECT (E) WALLS AND LIGHTS IN PLACE
DEAD HIMALAYAN BIRCH TO BE REMOVED
REMOVE EXISTING FOUNTAIN AND PRESERVE FOR REINSTALLATION
(E) WALL TO BE REMOVED
(4) AMERICAN SWEETGUMS TO BE REMOVED
6" SAUCER MAGNOLIA TO BE REMOVED
4" PERSIAN IRONWOOD TO BE REMOVED
S.A.D FOR EXTENT OF BUILDING/STAIR DEMOLITION
S.A.D FOR WALL/STAIR DEMOLITION
(3) BOXELDER MAPLES TO BE REMOVED
EXISTING BUILDING OUTLINE
PROTECT (E) WALLS AND LIGHTS IN PLCAE
(3) JAPANESE MAPLE TO REMAIN
36" CANARY ISLAND DATE PALM TO REMAIN
32.5" COAST LIVE OAK TO REMAIN
PROTECT (E) CONCRETE PAVING IN PLACE
(2) 4" RED HORSE CHESTNUT TO REMAIN
24.5" (E) COAST LIVE OAK TO REMAIN
14.0" (E) COAST LIVE OAK TO REMAIN
20.5" (E) COAST LIVE OAK TO REMAIN
TREE PROTECTION FENCING 07 L6.05
28.5" (E) COAST LIVE OAK TO REMAIN
23.5" (E) COAST LIVE OAK TO REMAIN
28.5" (E) COAST LIVE OAK TO REMAIN
(E) SCULPTURE TO BE REMOVED AND RELOCATED OFF SITE BY OTHERS
6" MARINA MADRONE TO BE REMOVED
14" GINGKO TREE TO BE REMOVED
36"CANARY ISLAND DATE PALM TO BE RELOCATED
36" COAST LIVE OAK TO BE REMOVED
RELOCATED TREE 89 PROPOSED LOCATION
EXISTING KIOSK TO BE RELOCATED
4" GINGKO TO BE RELOCATED
OUTLINE FOR BUILDING DEMOLITION
18" ATLAS CEDAR TO BE REMOVED
PROPOSED BUILDING OUTLINE
2 (E) MONTEREY CYPRESS TO BE REMOVED
(E) MONTEREY CYPRESS TREES TO BE REMOVED
(2) 2" CRABAPPLE TO BE REMOVED
12" (E) COAST LIVE OAK TO BE REMOVED
10" (E) NOBLE FIR TO REMAIN
3 (E) JAPANESE BLACK PINE TO REMAIN
EXISTING BUILDING OUTLINE
10" (E) FLOSS SILK TREE TO REMAIN
12" (E) COAST LIVE OAK TO REMAIN
29"(E) CANARY ISLAND DATE PALM TO REMAIN
25" (E) STONE PINE TO REMAIN
28.5" (E) STONE PINE TO BE REMOVED
(E) 28" PERUVIAN PEPPER TO REMAIN
38.5" DEODAR CEDAR TO BE REMOVED
(E) 32" VALLEY OAK TO REMAIN
4 (E) STONE PINE TO REMAIN
(E) CHINESE ELM TO REMAIN
(E) CHINESE ELM TO REMAIN
5" TULIP TREE TO REMAIN
8" (E) COAST LIVE OAK TO REMAIN

DEMOLITION AREA – REMOVE EXISTING HARDSCAPE AND LANDSCAPE. THIS IS INCLUDING BUT NOT LIMITED TO BIKE RACKS, POLE MOUNTED LIGHT FIXTURES, FIXED BOLLARDS, PNEUMATIC BOLLARDS, HANDRAILS, ETC.

TREE PROTECTION FENCE

LIMIT OF WORK

TREE TO BE REMOVED

(ER) TREE TO BE RELOCATED

0 10' 20'
1" = 20'

CAW ARCHITECTS
455 LAMBERT AVENUE PALO ALTO, CA 94306
WWW.CAWARCHITECTS.COM • 650.328.1818 • FAX: 650.328.1888

COPYRIGHT 2021 BY CAW ARCHITECTS, INC.

WILLIAM RAWN ASSOCIATES | Architects, Inc.
10 Post Office Sq.
Suite 1010
Boston, MA 02109

STAMP

LICENSED LANDSCAPE ARCHITECT
JOHN L. WONG
No. 1758
Signature
10/31/21
Renewal Date
08/20/21
Date
STATE OF CALIFORNIA

CONSULTANTS

swa

2200 Bridgeway
Sausalito, California
94965-1750
United States
www.swagroup.com
+1.415.332.5100 o

MILESTONE	DATE
ASA SUBMISSION	12.07.2020
ASA RESUBMITTAL	08.20.2021

PROJECT NAME

NORTH BUILDING
STANFORD UNIVERSITY
GRADUATE SCHOOL OF EDUCATION
485 LASUEN MALL
STANFORD, CA 94305

SHEET TITLE

DEMOLITION, TREE PROTECTION, REMOVAL AND RELOCATION PLAN

PROJECT NO. STFS801
DRAWN BY X. KUANG, H. ZHAO
CHECKED BY W. HYNES

SHEET

L1.01

SITE PLAN NOTES

1. LOCATION OF ALL ABOVE GROUND ELEMENTS TO BE REVIEWED AND APPROVED BY LANDSCAPE ARCHITECT OR STANFORD REPRESENTATIVE.
2. PROPOSED ELEMENTS, INCLUDING UTILITIES, LOCATED AMONG EXISTING TREES SHALL BE REVIEWED IN FIELD WITH LANDSCAPE ARCHITECT AND STANFORD ARBORIST PRIOR TO EXCAVATING.
3. PROVIDE 4'X4' SQUARE MOCKUPS FOR ALL CONCRETE FLATWORK FOR REVIEW AND APPROVAL
4. PROVIDE MOCKUP OF 4' LONG SECTION OF STEPS WITH CONTRASTING STRIPE FOR REVIEW AND APPROVAL.
5. TRASH AND RECYCLE BINS TO BE DETERMINED AND WILL BE LOCATED BY LANDSCAPE ARCHITECT OR STANFORD REPRESENTATIVE PRIOR TO ORDERING OR INSTALLATION.
6. ALL EXISTING AND PROPOSED ASPHALT, MULCH AND AGGREGATE PATHS TO HAVE METAL HEADERS.
7. TAKE ALL DIMENSIONS PERPENDICULAR TO ANY REFERENCE LINE, WORK LINE, FACE OF BUILDING, FACE OF WALL, OR CENTERLINE, AS INFERRED ON DRAWINGS.
8. ALL WORK PERFORMED WITHIN THE DRIP LINE OF TREES DESIGNATED "EXISTING TREES TO REMAIN" SHALL BE DONE BY HAND LABOR.
9. ALL ANGLES TO BE 90 DEGREES UNLESS OTHERWISE NOTED. MAINTAIN HORIZONTAL ALIGNMENT OF ADJACENT ELEMENTS AS NOTED ON DRAWINGS.
10. HOLD TOPS OF WALLS AND FENCES LEVEL UNLESS OTHERWISE NOTED
11. REFERENCE TO NORTH REFERS TO TRUE NORTH, REFERENCE TO SCALE IS FOR FULL-SIZED DRAWINGS ONLY. DO NOT SCALE FROM REDUCED DRAWINGS.
12. DIMENSIONS TAKE PRECEDENCE OVERS SCALES SHOWN ON DRAWINGS.
13. NOTES AND DETAILS ON SPECIFIC DRAWINGS TAKE PRECEDENCE OVER GENERAL NOTES AND TYPICAL DETAILS
14. DO NOT INSTALL ANY WORK ON STRUCTURE PRIOR TO REVIEW OF WATERPROOFING BY ARCHITECT.
15. ALL CONCRETE SLABS, RAMPS, OR STEP FOOTINGS SHALL BE DOWELED INTO ABUTTING WALLS, FOUNDATIONS AND FOOTINGS USING BARS OF THE SAME SIZE AND SPACING UNLESS OTHERWISE NOTED.

PAVING SCHEDULE (P)

SYMBOL	KEY	DESCRIPTION	MATERIAL	SUPPLIER	SIZE	COLOR	FINISH	JOINT	REMARK
E.J.	P1	COLORED CONCRETE 1	INTEGRAL COLOR CONCRETE	DAVIS COLOR	–	PALOMINO – 5447	MEDIUM ETCH	SAWCUT	MOCKUP REQUIRED
E.J.	P2	COLORED CONCRETE 2	INTEGRAL COLOR CONCRETE	DAVIS COLOR	–	MESA BUFF – 5447	MEDIUM ETCH	SAWCUT	MOCKUP REQUIRED
E.J.	P3	COLORED CONCRETE 3	INTEGRAL COLOR CONCRETE	DAVIS COLOR	–	MESA BUFF – 5447	LIGHT ETCH	SAWCUT	MOCKUP REQUIRED
	P4	STANDARD CONCRETE	–	–	–	STANDARD GRAY	LIGHT ETCH	SAWCUT	GLARE REDUCING AGENT
	P5	DECOMPOSED GRANITE	CRUSHED AGGREGATE	TMT ENTERPRISES, INC.	1/4"	FELTON GOLD	–	–	STABILIZED USE BINDER PER SPECIFICATIONS
	P6	ASPHALT PAVING	ASPHALT	–	–	–	–	–	–
	P7	GRAVEL	FELTON QUARRY GOLD	–	3/4" AGGREGATE	TAN	–	–	–
	P8	RIVERWASHED PEBBLE	LA PAZ PEBBLES	LYNGSO, WWW.LYNGSOGARDEN.COM 650.364.1730	1-2"	MEXICAN BLACK	–	–	PROVIDE MARKUP FOR REVIEW
	P9	SMALL FIR BARK MULCH	CLEAN FIR BARK	LYNGSO, WWW.LYNGSOGARDEN.COM 650.364.1730	–	–	–	–	–
	P10	ARBOR MULCH (WALK-ON MULCH)	WOOD CHIP MULCH	LYNGSO, WWW.LYNGSOGARDEN.COM 650.364.1730	–				
	P11	HEADER	STEEL	J.D. RUSSEL	1/4" X 5"	BLACK	–	–	–

AMENITY SCHEDULE (A)

KEY	DESCRIPTION	MATERIALS	MODEL	SUPPLIER	SIZE	COLOR	FINISH	REMARK
A1	BIKE RACK	STEEL	SEE DETAIL	SCH ENTERPRISES LLC WWW.SCHENTERPRISESLLC.ORG/	PER PLAN	BLACK	PFS THERMOPLASTIC BLACK	
A2	TRASH AND RECYCLE RECEPTACLE	STEEL	SEE DETAIL	VICTOR STANLEY 800-368-2573 WWW.VICTORSTANLEY.COM	PER PLAN	BLACK		
A3	FIXED BOLLARD	STEEL	–	STANFORD UNIVERSITY FACILITIES OPERATIONS, METAL SHOP 315 BONAIR SIDING 650-725-3172	3' TALL	BLACK		
A4	REMOVABLE BOLLARD	STEEL	–	STANFORD UNIVERSITY FACILITIES OPERATIONS, METAL SHOP 315 BONAIR SIDING 650-725-3172	3' TALL	BLACK		
A5	ENTRY SIGNAGE	PRECAST/PIP CONCRETE	–	TBD	SEE DETAIL			FOOTING REQUIRES STRUCTURAL REVIEW
A6A	SHORT BENCH AT MARY BELL FLOYD GARDEN	METAL AND THERMALLY MODIFIED WOOD	LANDSCAPE COMPACT	MMCITE/SPEC PLAY EQUIPMENT 800.475.1071	PER PLAN	TBD		SURFACE MOUNT
A6B	SHORT BENCH WITH BACK REST AT MARY BELL FLOYD GARDEN	METAL AND THERMALLY MODIFIED WOOD	LANDSCAPE COMPACT	MMCITE/SPEC PLAY EQUIPMENT 800.475.1071	PER PLAN	TBD		SURFACE MOUNT
A7A	LONG BENCH AT MARY BELL FLOYD GARDEN	METAL AND THERMALLY MODIFIED WOOD	LANDSCAPE COMPACT	MMCITE/SPEC PLAY EQUIPMENT 800.475.1071	PER PLAN	TBD		SURFACE MOUNT
A7B	LONG BENCH WITH BACK REST AT MARY BELL FLOYD GARDEN	METAL AND THERMALLY MODIFIED WOOD	LANDSCAPE COMPACT	MMCITE/SPEC PLAY EQUIPMENT 800.475.1071	PER PLAN	TBD		SURFACE MOUNT
A8	CURVED BENCH AT SUNKEN GARDEN	METAL AND THERMALLY MODIFIED WOOD	LANDSCAPE COMPACT	MMCITE/SPEC PLAY EQUIPMENT 800.475.1071	PER PLAN	TBD		SURFACE MOUNT
A9	CAMPUS STANDARD COURTYARD BENCH	TEAK	PARKSIDE BENCH	GARDENSIDE LTD., WW.GARDENSIDE.COM, CONTACT MIKE DAVID AT 1-888-999-8325	SEE DETAIL	NATURAL	2 COATS TEAK OIL FINISH	
A10	CONCRETE SEAT WALL WITH SKATE DETERRENT	INTEGRAL COLOR POURED IN PLACE CONCRETE			PER PLAN	PER PLAN		SEE ENLARGEMENT PLANS

ABBREVIATIONS

SYM	DESCRIPTION
BLDG	BUILDING
BS	BOTTOM OF STAIR
CL	CENTER LINE
(E)	EXISTING ELEMENT
EJ	EXPANSION JOINT
EQ	EQUAL
(ER)	ORIGINAL LOCATION OF ELEMENT TO BE RELOCATED
FFE	FINISH FLOOR ELEVATION
FG	FINISH GRADE (TOP OF SOIL)
FS	FINISH SURFACE (HARDSCAPE)
HDR	HEADER
L.O.W.	LIMIT OF WORK
(N)	NEW
N/A	NOT APPLICABLE
N.I.C.	NOT IN CONTRACT
(NR)	LOCATION OF RELOCATED ELEMENT

SYM	DESCRIPTION
O.C.	ON CENTER
P.A.	PLANTING AREA
P.O.B.	POINT OF BEGINNING
S.A.D.	SEE ARCHITECTURAL DRAWINGS
S.C.D.	SEE CIVIL DRAWINGS
S.I.D.	SEE IRRIGATION DRAWINGS
S.L.D.	SEE LIGHTING CONSULTANT'S DRAWINGS
S.S.	STAINLESS STEEL
S.S.D.	SEE STRUCTURAL DRAWINGS
S.U.	STANFORD UNIVERSITY
TBD	TO BE DETERMINED
TH	THRESHOLD
TS	TOP OF STAIR
TW	TOP OF WALL
TYP.	TYPICAL
U.O.N.	UNLESS OTHERWISE NOTED
V.I.E.	VERIFY IN FIELD

CAW ARCHITECTS
455 LAMBERT AVENUE PALO ALTO, CA 94306
WWW.CAWARCHITECTS.COM • 650.328.1818 • FAX: 650.328.1888

COPYRIGHT 2021 BY CAW ARCHITECTS, INC.

WILLIAM RAWN ASSOCIATES | Architects, Inc.
10 Post Office Sq.
Suite 1010
Boston, MA 02109

STAMP

LICENSED LANDSCAPE ARCHITECT
JOHN L. WONG
No. 1756
Signature
10/31/21
Renewal Date
08/20/21
Date
STATE OF CALIFORNIA

CONSULTANTS

swa

2200 Bridgeway
Sausalito, California
94965-1750
United States
www.swagroup.com
+1.415.332.5100 o

MILESTONE	DATE
ASA SUBMISSION	12.07.2020
ASA RESUBMITTAL	08.20.2021

PROJECT NAME

NORTH BUILDING
STANFORD UNIVERSITY
GRADUATE SCHOOL
OF EDUCATION
485 LASUEN MALL
STANFORD, CA 94305

SHEET TITLE

LANDSCAPE SITE PLAN
NOTES

PROJECT NO. STFS801
DRAWN BY X. KUANG, H. ZHAO
CHECKED BY W. HYNES

SHEET

L2.00

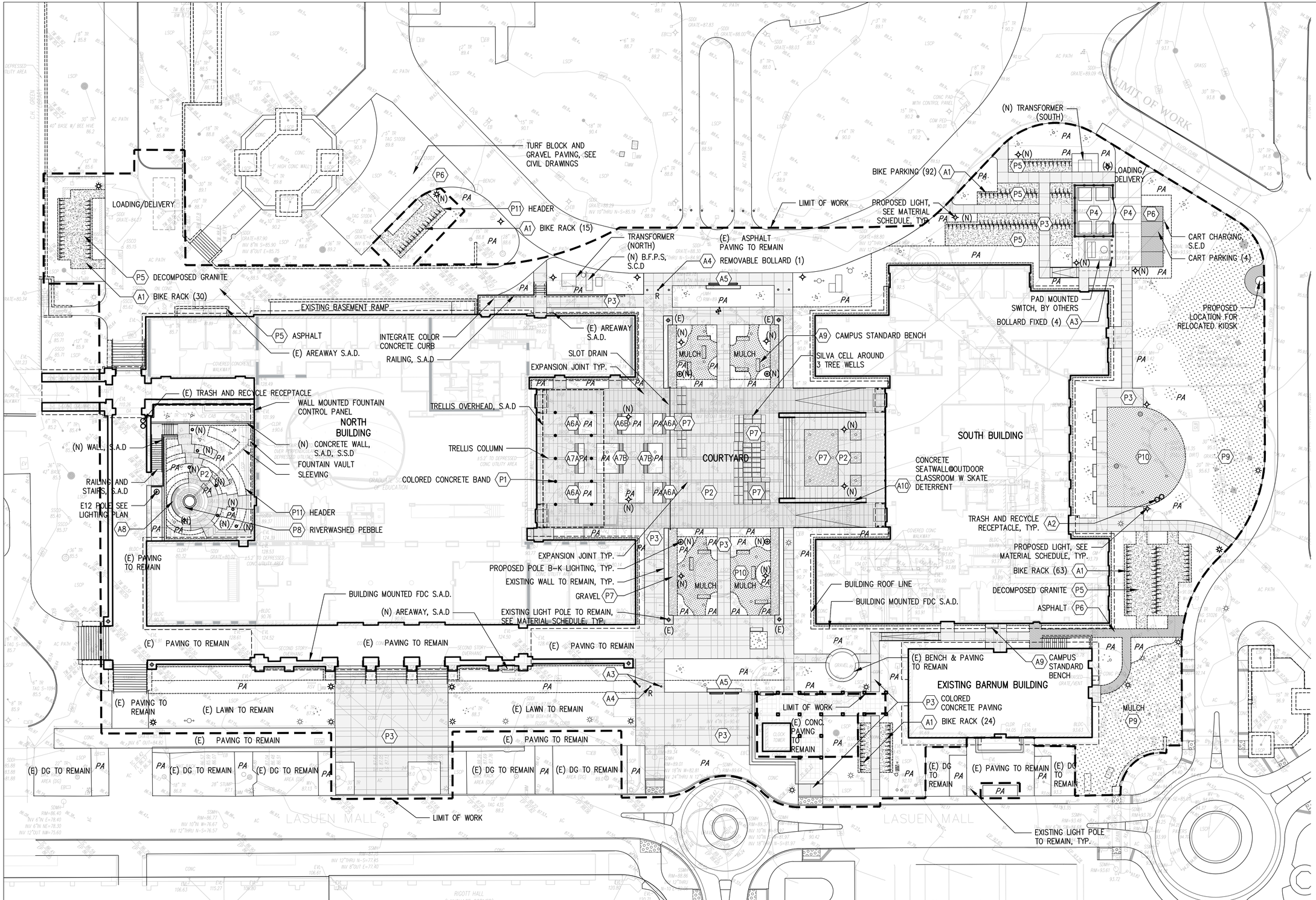

CAW ARCHITECTS
455 LAMBERT AVENUE PALO ALTO, CA 94306
WWW.CAWARCHITECTS.COM • 650.328.1818 • FAX: 650.328.1888

COPYRIGHT 2021 BY CAW ARCHITECTS, INC.

WILLIAM RAWN ASSOCIATES | Architects, Inc.
10 Post Office Sq.
Suite 1010
Boston, MA 02109

STAMP

LICENSED LANDSCAPE ARCHITECT
JOHN L. WONG
No. 1756
Signature
10/21/21
Renewal Date
08/20/21
Date
STATE OF CALIFORNIA

CONSULTANTS

swa

2200 Bridgeway
Sausalito, California
94965-1750
United States
www.swagroup.com
+1.415.332.5100 o

MILESTONE	DATE
ASA SUBMISSION	12.07.2020
ASA RESUBMITTAL	08.20.2021

PROJECT NAME

NORTH BUILDING
STANFORD UNIVERSITY
GRADUATE SCHOOL OF EDUCATION
485 LASUEN MALL
STANFORD, CA 94305

SHEET TITLE

LANDSCAPE SITE PLAN

PROJECT NO. STFS801
DRAWN BY X. KUANG, H. ZHAO
CHECKED BY W. HYNES

SHEET

L2.01

PLANTING AND IRRIGATION NOTES

1. ALL EXISTING LANDSCAPED AREAS AND IRRIGATION IN THE AREA THAT MAY HAVE BEEN IMPACTED ARE TO BE RESTORED AND OPERATIONAL WITH PRIOR APPROVAL OF THE STANFORD UNIVERSITY ARCHITECT AND PLANNING OFFICE AND STANFORD GROUNDS SERVICES.
2. EXISTING WIRING, CONTROLLER AND POINT OF CONNECTION TO BE REUSED FOR THIS PROJECT. NEW OR REPLACED EQUIPMENT SHOULD BE REPLACED IN ACCORDANCE WITH FDG GUIDELINES.
3. IRRIGATION DRAWINGS AND DETAILS ARE NOT BEING PROVIDED FOR THIS PROJECT. CONTRACTOR TO PROVIDE A SUBMITTAL TO STANFORD GROUNDS SERVICES FOR REVIEW FOR ALL PROPOSED EQUIPMENT USED TO RESTORE EXISTING SYSTEM. PROPOSED EQUIPMENT, DOCUMENTATION AND DETAIL DRAWINGS CAN BE FOUND AT THE STANFORD FDG GUIDELINES.
   HTTP://MAPS.STANFORD.EDU/SITES/ALL/LBRE-SHARED/FILES/DOCS_PUBLIC/LANDSCAPING_DESIGN_GUIDELINES.PDF AND HTTP://MAPS.STANFORD.EDU/FDG_VIEW_DRAWINGS
4. SPECIFY THAT ONLY RAIN BIRD IRRIGATION PARTS ARE UTILIZED. INCLUDE ADDITIONAL NOTE: ALL COPIES OF IRRIGATION INVOICES FOR ANY RAIN BIRD PRODUCTS USED IN THIS PROJECT TO BE RETAINED AND SUBMITTED TO GROUNDS SERVICES. STANFORD GROUNDS IRRIGATION (650) 650-725-8687.
5. TIES TO BE PROVIDED BY CONTRACTOR TO ATTACH VINES TO CABLES AND TRELLIS STRUCTURE. SUBMIT SAMPLE FOR REVIEW PRIOR TO INSTALLATION.
6. PROVIDE 3" OF MULCH FOR ALL UNPAVED PATHWAYS, ALL PLANTING AREAS AND 10' BEYOND THE LIMITS OF WORK.

TREE RELOCATION LIST

NUMBER	BOTANICAL NAME	COMMON NAME	CALIPER	PROPOSED LOCATION	BARNUM ASA
85	GINGKO BILOBA	MAIDENHAIR TREE	4"	MARY BELL FLOYD GARDEN	Y
89	PHOENIX CANARIENSIS	CANARY ISLAND DATE PALM	36"	SOUTH COURTYARD	N
109	BETULA UTILIS VAR. JACQUEMONTII	HIMALAYAN BIRCH	5.5"	SUNKEN COURTYARD	N
111	BETULA UTILIS VAR. JACQUEMONTII	HIMALAYAN BIRCH	4"	SUNKEN COURTYARD	N
112	BETULA UTILIS VAR. JACQUEMONTII	HIMALAYAN BIRCH	4"	SUNKEN COURTYARD	N
113	BETULA UTILIS VAR. JACQUEMONTII	HIMALAYAN BIRCH	5.5"	SUNKEN COURTYARD	N
114	BETULA UTILIS VAR. JACQUEMONTII	HIMALAYAN BIRCH	5.5"	SUNKEN COURTYARD	N
115	BETULA UTILIS VAR. JACQUEMONTII	HIMALAYAN BIRCH	4.5"	SUNKEN COURTYARD	N
116	BETULA UTILIS VAR. JACQUEMONTII	HIMALAYAN BIRCH	4"	SUNKEN COURTYARD	N
117	BETULA UTILIS VAR. JACQUEMONTII	HIMALAYAN BIRCH	3"	SUNKEN COURTYARD	N
S1008	GINGKO BILOBA	MAIDENHAIR TREE	5"	MARY BELL FLOYD GARDEN	

PLANT LIST

BOTANICAL NAME	COMMON NAME	SIZE	SPACING	WUCOLS (REG. 1)	COMMENTS
TREES					
ACER RUBRUM 'BOWHALL'	BOWHALL RED MAPLE	36" BOX	PER PLAN	M	6' MIN CLEAR TRUNK
BETULA UTILIS VAR. JACQUEMONTII	HIMALAYAN BIRCH	RELOCATED/24" BOX	PER PLAN	H	MULTI TO MIX W/ (E) TREES
GINKO BILOBA	MAIDENHAIR TREE	36" BOX	PER PLAN	M	LOW BRANCH
PRUNUS YEDOENSIS 'AKEBONO'	FLOWERING CHERRY	36" BOX	PER PLAN	L	
QUERCUS AGRIFOLIA	COAST LIVE OAK	48" BOX	PER PLAN	VL	
QUERCUS AGRIFOLIA	COAST LIVE OAK	RELOCATED/72" BOX	PER PLAN	VL	
QUERCUS LOBATA	VALLEY OAK	36"/48" BOX	PER PLAN	L	
QUERCUS SUBER	CORK OAK	36"/48" BOX	PER PLAN	L	
SEQUOIA SEMPERVIRENS	COAST REDWOOD	36" BOX	PER PLAN	H	
SHRUBS AND GROUNDCOVERS					
ARCTOSTAPHYLOS 'HOWARD MCMINN'	MANZANITA	5 GAL	48" O.C. TRI	L	
COPROSMA KIRKII	COPROSMA	5 GAL	30" O.C. TRI	L	
DIETES IRIDOIDES	FORTNIGHT LILY	5 GAL	30" O.C. TRI	L	
ESCALLONIA 'COMPACTA'	DWARF ESCALLONIA	5 GAL	30" O.C. TRI	M	
ESCALLONIA 'FRADESII'	ESCALLONIA	5 GAL	30" O.C. TRI	M	
HEBE 'AUTUMN GLORY'	HEBE	5 GAL	30" O.C. ROW	M	
LIGUSTRUM JAPONICUM 'TEXANUM'	PRIVET	5 GAL	30" O.C. TRI	M	
PITTOSPORUM CRASSIFOLIUM 'COMPACTUM'	DWARF KARO	5 GAL	30" O.C. ROW	M	
TRACHELOPSERMUM JASMINOIDES	STAR JASMINE	5 GAL	36" O.C. TRI	M	
GROVE PLANTING					
COPROSMA KIRKII	COPROSMA	5 GAL	30" O.C. TRI	L	
COTONEASTER HORIZONTALIS	ROCKSPRAY COTONEASTER	5 GAL	48" O.C. TRI	L	
DUCHESNICA INDICA	INDIAN STRAWBERRY	5 GAL	30" O.C. TRI	M	
ROSMARINUS 'COLLINGWOOD INGRAM'	ROSEMARY	5 GAL	30" O.C. TRI	L	
MARY BELL FLOYD GARDEN					
ARBUTUS 'ELFIN KING'	STRAWBRRY BUSH	5 GAL	36" O.C. ROW	L	
CHOISYA TERNATA	MEXICAN ORANGE	5 GAL	36" O.C. ROW	M	
FRAGARIA CHILOENSIS	STRAWBERRY	5 GAL	36" O.C. TRI	M	
LAVANDULA STOECHAS	SPANISH LAVENDER	5 GAL	30" O.C. ROW	L	
PLUMBAGO AURICULATA	CAPE PLUMBAGO	5 GAL	36" O.C. TRI	L	
PUNICA GRANATUM 'NANA'	DWARF POMEGRANATE	5 GAL	30" O.C. ROW	L	
ROSMARINUS 'COLLINGWOOD INGRAM'	ROSEMARY	5 GAL	36" O.C. ROW	L	
SALVIA BLEPHAROPHYLLA	EYELASH SAGE	5 GAL	30" O.C. ROW	L	
SALVIA BEE'S BLISS	CREEPING SAGE	5 GAL	48" O.C. ROW	L	
THYMUS VULGARIS	THYME	5 GAL	12" O.C. TRI	L	
THYMUS X CITRIODORUS 'AUREUS'	GOLDEN LEMON THYME	5 GAL	12" O.C. TRI	L	
SUNKEN GARDEN					
ABUTILON SP.	HEDGE MAPLE	5 GAL	PER PLAN	M	
BUXUS MICROPHYLLA JAPONICA	JAPANESE BOXWOOD	5 GAL	24" O.C. ROW	M	
LIRIOPE MUSCARI	LIRIOPE	5 GAL	12" O.C. TRI	M	
MAHONIA AQUIFOLIUM	OREGON GRAPE HOLLY	5 GAL	30" O.C. ROW	M	
PITTOSPORUM CRASSIFOLIUM 'COMPACTUM'	DWARF KARO	5 GAL	30" O.C. ROW	M	
VINCA MINOR	DWARF PERIWINKLE	5 GAL	12" O.C. TRI	M	
SOUTH GARDEN MIX					
ARCTOSTAPHYLOS D. 'HOWARD MCMINN'	MANZANITA	5 GAL	30" O.C. ROW	L	
COPROSMA KIRKII	COPROSMA	5 GAL	30" O.C. ROW	L	
COTONEASTER HORIZONTALIS	ROCKSPRAY COTONEASTER	5 GAL	48" O.C. TRI	L	
HETEROMELES ARBUTIFOLIA	TOYON	5 GAL	PER PLAN	L	
MAHONIA AQUIFOLIUM	OREGON GRAPE	5 GAL	36" O.C. TRI	L	
RIBES SPECIOSUM	FUCHSIAFLOWER GOOSEBERRY	5 GAL	36" O.C. TRI	L	

CAW ARCHITECTS
455 LAMBERT AVENUE PALO ALTO, CA 94306
WWW.CAWARCHITECTS.COM • 650.328.1818 • FAX: 650.328.1888

COPYRIGHT 2021 BY CAW ARCHITECTS, INC.

WILLIAM RAWN ASSOCIATES | Architects, Inc.
10 Post Office Sq.
Suite 1010
Boston, MA 02109

STAMP

LICENSED LANDSCAPE ARCHITECT
JOHN L. WONG
No. 1756
Signature
10/21/21
Renewal Date
08/20/21
Date
STATE OF CALIFORNIA

CONSULTANTS

swa

2200 Bridgeway
Sausalito, California
94965-1750
United States
www.swagroup.com
+1.415.332.5100 o

MILESTONE	DATE
ASA SUBMISSION	12.07.2020
ASA RESUBMITTAL	08.20.2021

PROJECT NAME

NORTH BUILDING
STANFORD UNIVERSITY
GRADUATE SCHOOL
OF EDUCATION
485 LASUEN MALL
STANFORD, CA 94305

SHEET TITLE

PLANTING NOTES

PROJECT NO. STFS801
DRAWN BY X. KUANG, H. ZHAO
CHECKED BY W. HYNES

SHEET

L3.00

(4) EVERGREEN ELMS TO REMAIN

2 (E) 10" EUCALYPTUS TO REMAIN

11.5" (E) SAWLEAF ZELKOVA TO REMAIN

(E) 10" AMERICAN SWEETGUM TO REMAIN

7 (E) EUCALYPTUS TO REMAIN

-- | 5 GAL | LIGUSTRUM JAPONICUM 'TEXANUM' DOUBLE ROW SPACING

PUNICA GRANATUM 'NANA' -- | 5 GAL

GOPROSMA KIRKII -- | 5 GAL

ARBUTUS UNEDO 'COMPACTA' | 5 GAL

LIGUSTRUM JAPONICUM 'TEXANUM' DBL ROW SPACING 30" O.C. -- | 5 GAL

PISTACIA CHINENSIS CHINESE PISTACHE 3 | 36" BOX

QUERCUS LOBATA VALLEY OAK 3 | 36" BOX

QUERCUS AGRIFOLIA COAST LIVE OAK 4 | 24" BOX

ARCTOSTAPHYLOS 'HOWARD MCMINN' -- | 5 GAL

-- | 5 GAL | LIGUSTRUM JAPONICUM 'TEXANUM' SPACING 30" O.C.

27.5" (E) FREMONT COTTONWOOD TO REMAIN

10.5" (E) SAWLEAF ZELKOVA TO REMAIN

RELOCATED BIRCH TREES (8)

-- | 5 GAL | PITTOSPORUM CRASSIFOLIUM 'COMPACTUM' DOUBLE ROW SPACING

-- | 5 GAL | MAHONIA AQUIFOLIUM

-- | 5 GAL | BUXUS M. 'JAPONICA' DOUBLE ROW SPACING

ROSMARINUS 'COLLINGWOOD INGRAM' -- | 5 GAL

DUCHESNEA INDICA -- | 5 GAL

COTONEASTER HORIZONTALIS -- | 5 GAL

2 RELOCATED GINGKO TREES PER L1.11-1.01

GINGKO BILOBA MAIDENHAIR TREE 3 | 24" BOX

MBF GARDEN -- | 5 GAL

ARBUTUS 'ELFIN KING'
CHOYSIA TERNATA 'AZTEC PEARL'
FRAGARIA CHILOENSIS
HEBE 'AUTUMN GLORY'
LAVANDULA STOECHAS
PUNICA GRANATUM 'NANA'
ROSMARINUS 'COLLINGWOOD INGRAM'
SALVIA 'BEE'S BLISS'
SALVIA BLEPHAROPHYLLA
THYMUS X CITRIODORUS 'AUREUS'
THYMUS VULGARIS

3 | 48" BOX | QUERCUS SUBER CORK OAK

2 | 48" BOX | QUERCUS LOBATA VALLEY OAK

9 | 36" BOX | ACER RUBRUM 'BOWHALL' RED MAPLE

DISTICTIS BUCCINATORIA -- | 5 GAL SPACING 30" O.C.

1 | SPECIMEN COAST LIVE OAK TREE 72" BOX OR EQUIVALENT

-- | 5 GAL | ARCTOSTAPHYLOS 'HOWARD MCMINN'

4 | 36" BOX | QUERCUS AGRIFOLIA COAST LIVE OAK

(E) 28" PERUVIAN PEPPER TO REMAIN

QUERCUS LOBATA VALLEY OAK 1 | 24" BOX

SEQUOIA SEMPERVIRENS COAST REDWOOD -- | 24" BOX

RIBES SPECIOSUM -- | 5 GAL

HETEROMELES ARBUTIFOLIA -- | 5 GAL SPACING 30" O.C.

(E) 32" VALLEY OAK TO REMAIN

ARCTOS D. 'HOWARD MC MINN' 7 | 5 GAL

MAHONIA AQUIFOLIUM 5 | 5 GAL

RELOCATED 30" (E) CANARY ISLAND DATE PALM TREE

RIBES SPECIOSUM 6 | 5 GAL SPACING 30" O.C.

COPROSMA KIRKII -- | 5 GAL

29" (E) CANARY ISLAND DATE PALM TREE TO REMAIN

COTONEASTER HORIZONATALIS -- | 5 GAL

HEBE 'AUTUMN GLORY' -- | 5 GAL

MULCH

(3) JAPANESE MAPLE TO REMAIN

36" CANARY ISLAND DATE PALM TO REMAIN

32.5" COAST LIVE OAK TO REMAIN

-- | 1 GAL | LIRIOPE MUSCARI

-- | 5 GAL | HEBE 'AUTUMN GLORY'

-- | 1 GAL | VINCA MINOR

3 | 24" BOX | BETULA JACQEMONTII JACQUEMONTII BIRCH

5 | 15 GAL | ABUTILON H. 'CRIMSON BELLE'

-- | 5 GAL | DIETES IRIDIOIDES SPACING 30" O.C.

ESCALLONIA COMPACTA -- | 5 GAL

COPROSMA KIRKII -- | 5 GAL

PITTOSPORUM CRASSIFOLIUM 'COMPACTUM' DOUBLE ROW SPACING -- | 5 GAL

4 | SPECIMEN COAST LIVE OAK TREES 72" BOX OR EQUIVALENT

3 | 48" BOX | QUERCUS SUBER CORK OAK

2 | 48" BOX | QUERCUS LOBATA VALLEY OAK

-- | 5 GAL | TRACHESLOSPERMUM JAS.

ACER PALMATUM SANGO KAKU 4 | 36" BOX

PRUNUS X YEDOENSIS 'AKEBONO' YOSHINO CHERRY 2 | 24" BOX

ARCTOS D. 'HOWARD MC MINN' SPACING 30" O.C. 7 | 5 GAL

LIGUSTRUM 'TEXANUM' -- | 5 GAL

4 (E) STONE PINE TO REMAIN

(2) 4" RED HORSE CHESTNUT TO REMAIN

ESCALLONIA FRADESII -- | 5 GAL

ROSEMARINUS 'COLLINGWOOD INGRAM' -- | 5 GAL

DIETES IRIDIOIDES -- | 5 GAL

SOD LAWN

SOD LAWN

24.5" (E) COAST LIVE OAK TO REMAIN

-- | 5 GAL | LIGUSTRUM JAPONICUM 'TEXANUM' TRIPLE ROW TRI

4 | 48" BOX | QUERCUS AGRIFOLIA COAST LIVE OAK

4 | 15 GAL | RIBES SPECIOSUM

PINUS PINEA PINE 2 | 36" BOX

10" (E) NOBLE FIR TO REMAIN

10" (E) FLOSS SILK TREE TO REMAIN

-- | 5 GAL | LIGUSTRUM JAPONICUM 'TEXANUM'

(E) LIGUSTRUM TO REMAIN IN PLACE, REPLACE IF REMOVAL IS REQUIRED.

(E) CHINESE ELM TO REMAIN

(E) CHINESE ELM TO REMAIN

MULCH

MULCH

12" (E) COAST LIVE OAK TO REMAIN

28.5" (E) COAST LIVE OAK TO REMAIN

23.5" (E) COAST LIVE OAK TO REMAIN

14.0" (E) COAST LIVE OAK TO REMAIN

28.5" (E) COAST LIVE OAK TO REMAIN

20.5" (E) COAST LIVE OAK TO REMAIN

8" (E) COAST LIVE OAK TO REMAIN

25" (E) STONE PINE TO REMAIN

3 (E) JAPANESE BLACK PINE TO REMAIN

5" TULIP TREE TO REMAIN

-- | 5 GAL | RHAPHIOLEPIS INDICA 'BALLERINA'

-- | 5 GAL | ARCTOSTAPHYLOS 'HOWARD MCMINN'

-- | 5 GAL | LIGUSTRUM JAPONICUM 'TEXANUM'

0 10' 20'
1" = 20'

CAW ARCHITECTS

455 LAMBERT AVENUE PALO ALTO, CA 94306
WWW.CAWARCHITECTS.COM • 650.328.1818 • FAX: 650.328.1888

COPYRIGHT 2021 BY CAW ARCHITECTS, INC.

WILLIAM RAWN ASSOCIATES | Architects, Inc.
10 Post Office Sq.
Suite 1010
Boston, MA 02109

STAMP

LICENSED LANDSCAPE ARCHITECT
JOHN L WONG
No. 1758
Signature
10/21/21
Renewal Date
08/20/21
Date
STATE OF CALIFORNIA

CONSULTANTS

swa

2200 Bridgeway
Sausalito, California
94965-1750
United States
www.swagroup.com
+1.415.332.5100 o

MILESTONE	DATE
ASA SUBMISSION	12.07.2020
ASA RESUBMITTAL	08.20.2021

PROJECT NAME

NORTH BUILDING
STANFORD UNIVERSITY
GRADUATE SCHOOL
OF EDUCATION
485 LASUEN MALL
STANFORD, CA 94305

SHEET TITLE

PLANTING PLAN

PROJECT NO. STFS801
DRAWN BY X. KUANG, H. ZHAO
CHECKED BY W. HYNES

SHEET

L3.01

IRRIGATION NOTES

1. THESE IRRIGATION DRAWINGS ARE DIAGRAMMATIC AND INDICATIVE OF THE WORK TO BE INSTALLED. ALL PIPING, VALVES, AND OTHER IRRIGATION COMPONENTS MAY BE SHOWN WITHIN PAVED AREAS FOR GRAPHIC CLARITY ONLY AND ARE TO BE INSTALLED WITHIN PLANTING AREAS. DUE TO THE SCALE OF THE DRAWINGS, IT IS NOT POSSIBLE TO INDICATE ALL OFFSETS, FITTINGS, SLEEVES, CONDUIT, AND OTHER ITEMS WHICH MAY BE REQUIRED. INVESTIGATE THE STRUCTURAL AND FINISHED CONDITION AFFECTING THE CONTRACT WORK INCLUDING OBSTRUCTIONS, GRADE DIFFERENCES OR AREA DIMENSIONAL DIFFERENCES. IN THE EVENT OF FIELD DISCREPANCY WITH CONTRACT DOCUMENTS, PLAN THE INSTALLATION WORK ACCORDINGLY BY NOTIFICATION AND APPROVAL OF THE OWNER'S AUTHORIZED REPRESENTATIVE AND ACCORDING TO THE CONTRACT SPECIFICATIONS. NOTIFY AND COORDINATE IRRIGATION CONTRACT WORK WITH APPLICABLE CONTRACTORS FOR THE LOCATION AND INSTALLATION OF PIPE, CONDUIT OR SLEEVES THROUGH OR UNDER WALLS, ROADWAYS, PAVING AND STRUCTURES BEFORE CONSTRUCTION. IN THE EVENT THESE NOTIFICATIONS ARE NOT PERFORMED, THE CONTRACTOR ASSUMES FULL RESPONSIBILITY FOR REQUIRED REVISIONS.

2. THE CONTRACTOR SHALL COMPLY WITH ALL APPLICABLE CODES, STANDARDS, AND REGULATIONS. ALL WORK AND MATERIALS SHALL BE IN FULL ACCORDANCE WITH THE LATEST RULES AND REGULATIONS OF THE NATIONAL ELECTRIC CODE; THE UNIFORM PLUMBING CODE, PUBLISHED BY THE WESTERN PLUMBING OFFICIALS ASSOCIATION; AND OTHER STATE OR LOCAL LAWS OR REGULATIONS. NOTHING IN THESE DRAWINGS IS TO BE CONSTRUED TO PERMIT WORK NOT CONFORMING TO THESE CODES OR REGULATIONS. THE CONTRACTOR SHALL FURNISH WITHOUT ANY EXTRA CHARGE, ANY ADDITIONAL MATERIAL AND LABOR WHEN REQUIRED BY THE COMPLIANCE WITH THESE CODES AND REGULATIONS.

3. THE CONTRACTOR SHALL COORDINATE INSTALLATION OF IRRIGATION SYSTEM WITH LAYOUT AND INSTALLATION OF THE PLANT MATERIALS TO INSURE THAT THERE WILL BE COMPLETE AND UNIFORM IRRIGATION COVERAGE OF PLANTING IN ACCORDANCE WITH THESE DRAWINGS, AND CONTRACT DOCUMENTS. THE IRRIGATION LAYOUT SHALL BE CHECKED BY THE CONTRACTOR AND OWNER'S AUTHORIZED REPRESENTATIVE PRIOR TO CONSTRUCTION TO DETERMINE IF ANY CHANGES, DELETIONS, OR ADDITIONS ARE REQUIRED. IRRIGATION SYSTEM SHALL BE INSTALLED AND TESTED PRIOR TO INSTALLATION OF PLANT MATERIAL.

4. THE INTENT OF THIS IRRIGATION SYSTEM IS TO PROVIDE THE MINIMUM AMOUNT OF WATER REQUIRED TO SUSTAIN GOOD PLANT HEALTH.

5. IT IS THE RESPONSIBILITY OF THE MAINTENANCE CONTRACTOR AND/OR OWNER TO PROGRAM THE IRRIGATION CONTROLLER(S) TO PROVIDE THE MINIMUM AMOUNT OF WATER NEEDED TO SUSTAIN GOOD PLANT HEALTH. THIS INCLUDES MAKING ADJUSTMENTS TO THE PROGRAM FOR SEASONAL WEATHER CHANGES, PLANT MATERIAL, WATER REQUIREMENTS, MOUNDS, SLOPES, SUN, SHADE AND WIND EXPOSURE.

6. IT IS THE RESPONSIBILITY OF A LICENSED ELECTRICAL CONTRACTOR TO PROVIDE 120 VOLT A.C. (2.5 AMP DEMAND PER CONTROLLER) ELECTRICAL SERVICE TO THE CONTROLLER LOCATION(S). IT IS THE RESPONSIBILITY OF THE IRRIGATION CONTRACTOR TO COORDINATE THE ELECTRICAL SERVICE STUB-OUT TO THE CONTROLLER(S). PROVIDE PROPER GROUNDING PER CONTROLLER MANUFACTURER'S INSTRUCTIONS AND IN ACCORDANCE WITH LOCAL CODES.

7. PROVIDE EACH CONTROLLER WITH ITS OWN GROUND ROD. SEPARATE THE GROUND RODS BY A MINIMUM OF EIGHT FEET. THE GROUND ROD SHALL BE AN EIGHT FOOT LONG BY 5/8" DIAMETER U.L. APPROVED COPPER CLAD ROD. INSTALL NO MORE THAN 6" OF THE GROUND ROD ABOVE FINISH GRADE. CONNECT #6 GAUGE WIRE WITH A U.L. APPROVED GROUND ROD CLAMP TO ROD AND BACK TO GROUND SCREW AT BASE OF CONTROLLER WITH APPROPRIATE CONNECTOR. MAKE THIS WIRE AS SHORT AS POSSIBLE, AVOIDING KINKS OR BENDING.

8. SCHEDULE A MEETING WHICH INCLUDES REPRESENTATIVES OF THE IRRIGATION CONTROLLER MANUFACTURER, THE MAINTENANCE CONTRACTOR, THE OWNER AND THE IRRIGATION CONTRACTOR AT THE SITE FOR INSTRUCTION ON THE PROPER PROGRAMMING AND OPERATION OF THE IRRIGATION CONTROLLER.

9. INSTALL 3" DETECTABLE TAPE ABOVE ALL PRESSURIZED MAIN LINES AS DETAILED. USE CHRISTY MODEL #TA-DT-3-BIRR FOR POTABLE IRRIGATION SYSTEMS OR #TA-DT-3-PRW FOR RECYCLED IRRIGATION WATER SYSTEMS.

10. PROVIDE EACH IRRIGATION CONTROLLER WITH ITS OWN INDEPENDENT LOW VOLTAGE COMMON GROUND WIRE.

11. IRRIGATION CONTROL WIRES: SOLID COPPER WITH U.L. APPROVAL FOR DIRECT BURIAL IN GROUND. COMMON GROUND WIRE: SIZE #12-1 WIRE WITH A WHITE INSULATING JACKET. CONTROL WIRE SERVICING REMOTE CONTROL VALVES: SIZE #14-1 WIRE WITH INSULATING JACKET OF COLOR OTHER THAN WHITE. TRACING WIRE SHALL HAVE A YELLOW INSULATING JACKET. SPLICES SHALL BE MADE WITH 3M-DBY SEAL PACKS OR APPROVED EQUAL.

12. INSTALL TWO SPARE CONTROL WIRES OF A DIFFERENT COLOR ALONG THE ENTIRE MAIN LINE. LOOP 36" EXCESS WIRE INTO EACH SINGLE VALVE BOX AND INTO ONE VALVE BOX IN EACH GROUP OF VALVES.

13. SPLICING OF LOW VOLTAGE WIRES IS PERMITTED IN VALVE BOXES ONLY. LEAVE A 36" LONG, 1" DIAMETER COIL OF EXCESS WIRE AT EACH SPLICE AND A 36" LONG EXPANSION LOOP EVERY 100 FEET ALONG WIRE RUN. TAPE WIRES TOGETHER EVERY TEN FEET. DO NOT TAPE WIRES TOGETHER WHERE CONTAINED WITHIN SLEEVING OR CONDUIT.

14. INSTALL GREEN (LAWN), BLACK (SHRUB/GC/MULCD) PLASTIC VALVE BOXES WITH BOLT DOWN, NON HINGED COVER MARKED "IRRIGATION". BOX BODY SHALL HAVE KNOCK OUTS. ACCEPTABLE VALVE BOX MANUFACTURER'S INCLUDE NDS, CARSON OR APPROVED EQUAL.

15. INSTALL REMOTE CONTROL VALVE BOXES 12" FROM WALK, CURB, BUILDING OR LANDSCAPE FEATURE. AT MULTIPLE VALVE BOX GROUPS, INSTALL EACH BOX AN EQUAL DISTANCE FROM THE WALK, CURB, BUILDING OR LANDSCAPE FEATURE AND PROVIDE 12" BETWEEN BOX TOPS. ALIGN THE SHORT SIDE OF RECTANGULAR VALVE BOXES PARALLEL TO WALK, CURB, BUILDING OR LANDSCAPE FEATURE.

16. VALVE LOCATIONS SHOWN ARE DIAGRAMMATIC. INSTALL IN GROUND COVER/SHRUB AREAS (AVOID LAWN AREAS WHERE POSSIBLE).

17. THE REMOTE CONTROL VALVES SPECIFIED ON THE DRAWINGS IS A PRESSURE REDUCING TYPE. SET THE DISCHARGE PRESSURE AS FOLLOWS:

A. SPRAY HEADS=40 PSI
B. ROTARY HEADS=60 PSI
C. DRIP EMITTERS=35 PSI
D. BUBBLERS= 30 PSI

18. INSTALL A GATE VALVE TO ISOLATE EACH REMOTE CONTROL VALVE OR GROUP OF RCV'S LOCATED TOGETHER. GATE VALVE SIZE SHALL BE SAME AS THE LARGEST REMOTE CONTROL VALVE IN MANIFOLD.

19. FLUSH AND ADJUST IRRIGATION OUTLETS AND NOZZLES FOR OPTIMUM PERFORMANCE AND TO PREVENT OVER SPRAY ONTO WALKS, ROADWAYS, AND/OR BUILDINGS. SELECT THE BEST DEGREE OF THE ARC AND RADIUS TO FIT THE EXISTING SITE CONDITIONS AND THROTTLE THE FLOW CONTROL AT EACH VALVE TO OBTAIN THE OPTIMUM OPERATING PRESSURE FOR EACH CONTROL ZONE.

20. SET SPRINKLER HEADS PERPENDICULAR TO FINISH GRADE.

21. LOCATE EMITTER OUTLETS ON UPHILL SIDE OF PLANT OR TREE.

22. LOCATE BUBBLERS ON UPHILL SIDE OF PLANT OR TREE.

23. INSTALL A HUNTER HCV SERIES, KBI CV SERIES, OR APPROVED EQUAL SPRING LOADED CHECK VALVE IN SPRINKLER RISER ASSEMBLIES WHERE LOW OUTLET DRAINAGE WILL CAUSE EROSION AND/OR EXCESS WATER.

24. WHERE IT IS NECESSARY TO EXCAVATE ADJACENT TO EXISTING TREES, USE CAUTION TO AVOID INJURY TO TREES AND TREE ROOTS. EXCAVATE BY HAND IN AREAS WHERE TWO (2) INCH AND LARGER ROOTS OCCUR. BACK FILL TRENCHES ADJACENT TO TREE WITHIN TWENTY-FOUR (24) HOURS. WHERE THIS IS NOT POSSIBLE, SHADE THE SIDE OF THE TRENCH ADJACENT TO THE TREE WITH WET BURLAP OR CANVAS.

25. NOTIFY LOCAL JURISDICTIONS FOR INSPECTION AND TESTING OF INSTALLED BACKFLOW PREVENTION DEVICE.

26. THE IRRIGATION SYSTEM DESIGN IS BASED ON THE MINIMUM OPERATING PRESSURE SHOWN ON THE IRRIGATION DRAWINGS. VERIFY WATER PRESSURE PRIOR TO CONSTRUCTION. REPORT ANY DIFFERENCE BETWEEN THE WATER PRESSURE INDICATED ON THE DRAWINGS AND THE ACTUAL PRESSURE READING AT THE IRRIGATION POINT OF CONNECTION TO THE OWNER'S AUTHORIZED REPRESENTATIVE.

27. IRRIGATION DEMAND: REFER TO PLANS.

28. THE EXISTING MAIN LINE SHOWN ON THE DRAWINGS IS DIAGRAMMATIC. VERIFY AND LOCATE EXISTING MAIN LINE IN FIELD. REPORT TO ARCHITECT IN WRITING ANY DEVIATION OF EXISTING MAIN LINE LOCATION FROM THAT SHOWN ON THE DRAWINGS.

29. PIPE SIZING SHOWN ON THE DRAWINGS IS TYPICAL. AS CHANGES IN LAYOUT OCCUR DURING STAKING AND CONSTRUCTION THE SIZE MAY NEED TO BE ADJUSTED ACCORDINGLY.

30. PIPE THREAD SEALANT COMPOUND SHALL BE RECTOR SEAL #5.

31. THE LANDSCAPE CONTRACTOR SHALL BE RESPONSIBLE FOR MINOR CHANGES IN THE IRRIGATION LAYOUT DUE TO OBSTRUCTIONS NOT SHOWN ON THE IRRIGATION DRAWINGS SUCH AS LIGHTS, FIRE HYDRANTS, SIGNS, ELECTRICAL ENCLOSURES, ETC.

32. THE LANDSCAPE CONTRACTOR SHALL BE RESPONSIBLE FOR CHANGES IN THE IRRIGATION LAYOUT AND VALVE ZONING DUE TO VARIATIONS IN THE EXISTING SITE CONDITIONS SUCH AS EXPOSURE FROM BUILDINGS, TRELLISES, TREES, ETC., AS WELL AS SLOPE AND SOIL CONDITIONS. THE CONTRACTOR SHALL NOTIFY THE LANDSCAPE ARCHITECT AND IRRIGATION CONSULTANT OF THE PROPOSED CHANGES PRIOR TO INSTALLATION FOR APPROVAL.

33. THE LANDSCAPE CONTRACTOR IS RESPONSIBLE FOR ADJUSTING THE IRRIGATION SYSTEM DESIGN IF THE PLANTING DESIGN CHANGES FROM THE ORIGINAL PLAN AND NEEDS TO ADAPT TO THE NEW PLANTING DESIGN. THE LANDSCAPE CONTRACTOR NEEDS TO NOTIFY THE LANDSCAPE ARCHITECT AND IRRIGATION CONSULTANT OF PROPOSED CHANGES PRIOR TO INSTALLATION FOR APPROVAL.

34. WHEN WORK OF THIS SECTION HAS BEEN COMPLETED AND SUCH OTHER TIMES AS MAY BE DIRECTED, REMOVE ALL TRASH, DEBRIS, SURPLUS MATERIALS AND EQUIPMENT FROM SITE.

35. CONTRACTOR SHALL BE RESPONSIBLE FOR SUPPLEMENTAL HAND WATERING OF ALL PLANT MATERIAL WITHIN DRIPLINE AREAS UNTIL THE PLANTS ARE SUFFICIENTLY ESTABLISHED.

NOTE:
INSTALL IRRIGATION SYSTEM PER STANFORD UNIVERSITY FACILITIES DESIGN GUIDELINES AND SPECIFICATIONS;
HTTP://MAPS.STANFORD.EDU/FDG_AVAILABLE
1. TREE AND SHRUB PROTECTION (#01532)
2. TRENCHING, BACKFILLING & COMPACTING (#02321)
3. LANDSCAPE IRRIGATION (#02810)

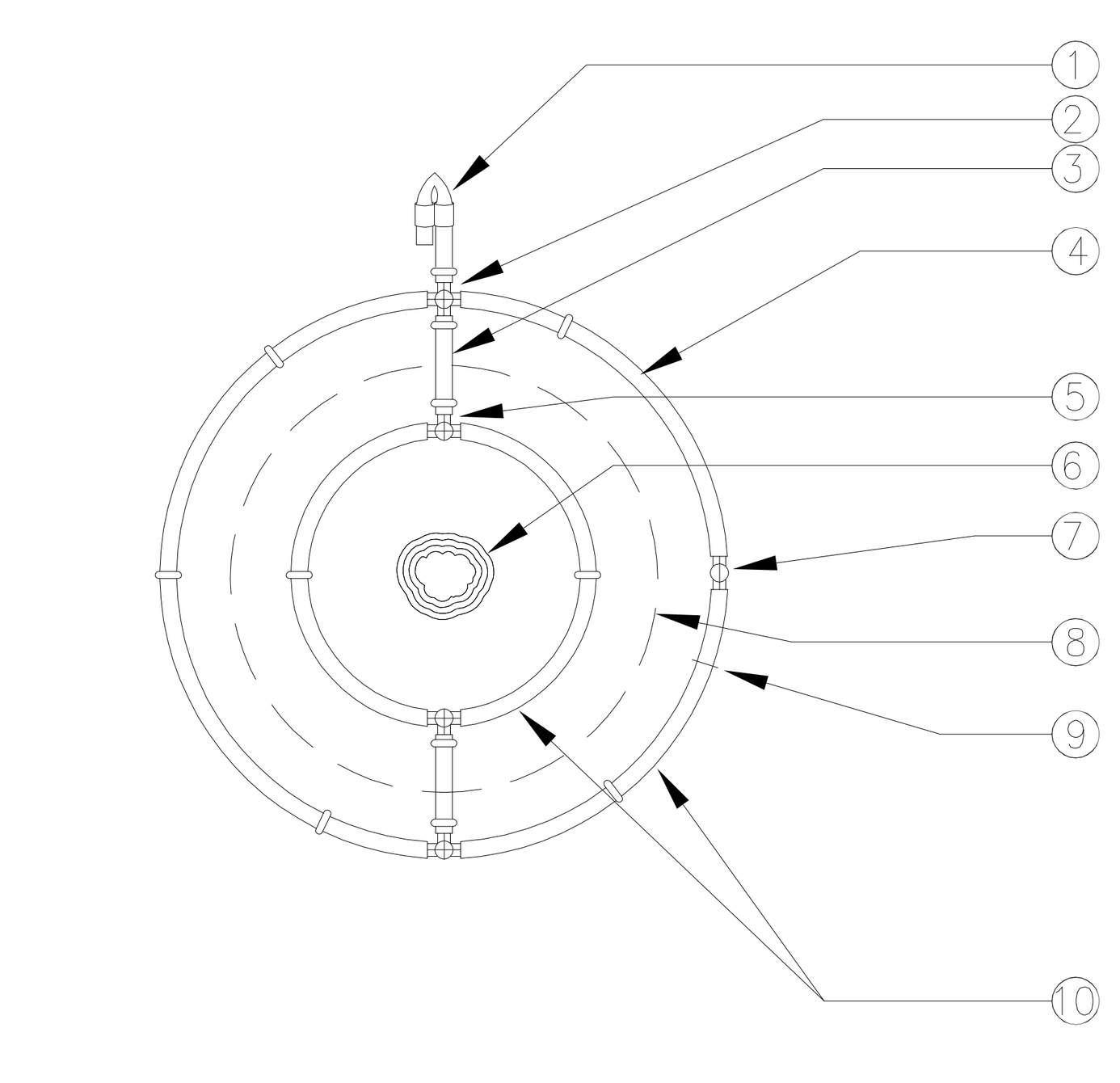

(1) FIGURE 8 LINE END (MODEL: TLFIG8)
(2) INSERT CROSS (TYP) (MODEL: TLCROS)
(3) BLANK TUBING
(4) RAINBIRD XFS DRIPLINE. INSTALL 1" BELOW SAND
(5) INSERT TEE (TYP) (MODEL: TLTEE)
(6) PALM TRUNK
(7) ADAPTER TEE FROM PVC TO DRIPLINE
(8) ROOT BALL
(9) 6-INCH SOIL STAPLE (TYP) (MODEL: TLS6) EQUALLY SPACE 4 AROUND EACH TUBE RING
(10) LOCATE FIRST DRIPLINE RING HALFWAY BETWEEN THE TRUNK AND EDGE OF ROOTBALL. LOCATE THE SECOND DRIPLINE RING AT EDGE OF ROOTBALL.

1
DRIP RINGS AROUND PALM
SCALE: NONE

IRRIGATION LEGEND

SYMBOL	MODEL NUMBER	DESCRIPTION	NOZZLE GPM	OPERATING PSI	OPERATING RADIUS (FEET)
⊖ ⊕	1806-SAM-PRS/ HE-VAN-15	RAIN BIRD POP-UP SPRAY SPRINKLER (TURF)	1.8,0.9	30	12-15
■	1404 SERIES	RAIN BIRD BUBBLER, 2 MIN PER TREE	1.0	30	TRICKLE
	1401 SERIES	RAIN BIRD BUBBLER, 1 PER SHRUB	0.25	30	TRICKLE
(3)	XFD-06-12	ON GRADE XFD WITH 12" O.C. EMITTER DRIP RING FOR TREES (3 RINGS PER TREE) SEE DETAIL	0.10	30	TRICKLE
	65ARIA075	NETAFIM DRIPLINE AIR/VACUUM RELIEF VENT			
	EBV-0500-T	NDS DRIPLINE FLUSH VALVE, 1/2" SCH. 40 PVC BALL VALVE			
	1806-SAM/MPR-5Q	RAIN BIRD POP-UP SPRINKLER WITH SIDE INLET AND A CLOSED 5' NOZZLE TO BE USED AS DRIPLINE INDICATOR			
	PESB SERIES	RAIN BIRD REMOTE CONTROL VALVE. REFER TO IR-11 ON SHEET L4.02			
	100-PEB-PRS-D/ RBY100MPTX	RAIN BIRD REMOTE CONTROL VALVE WITH A PRESSURE REGULATOR (SET TO 45 PSI) AND A 1" FILTER (0.20-18 GPM)			
	44RC	RAIN BIRD QUICK COUPLING VALVE			
	LGT-XX-SS	LEEMCO STAINLESS STEEL GATE VALVE (LINE SIZE)-2.5" AND SMALLER			
MV	3300-2"	SUPERIOR MASTER VALVE - 2" (NORMALLY OPEN)			
FS	FS-150B	RAIN BIRD FLOW SENSOR			
	3300-1"	SUPERIOR MASTER VALVE - 1" (NORMALLY OPEN)			
	FS-100B	RAIN BIRD FLOW SENSOR			
	-	AMIAD 2" TAF-750 LAKE WATER FILTER			
	500HLR-2"	WILKENS WYE PRESSURE REGULATING VALVE			
	825YA-1"	FEBCO REDUCED PRESSURE BACKFLOW ASSEMBLY			
A	MAXI-PEDS-1-P5-NA -LK450-EL24-ANT07 -FM-SPP-NL-RBSC -SATVRF-LINKSURVEY	RAIN BIRD ESP-SAT SERIES CONTROLLER (42 STATION, CLUSTER CONTROL UNIT (CCU) INTERFACE AND FLOW MONITORING WITH RADIO COMMUNICATION. ALL IN A SINGLE STAINLESS STEEL PEDESTAL MOUNTED ENCLOSURE. CONTACT RAIN BIRD SERVICES BEFORE CONTROLLER IS ORDERED TO COORDINATE A LINK SURVEY VISIT TO ENSURE PROPER ORDERING OF CONTROLLER.			
B	MAXI-WMS-1-P5-NA -LK450-EL24-ANT07 -FM-SPP-NL-RBSC -SATVRF-LINKSURVEY	RAIN BIRD ESP-SAT SERIES CONTROLLER (12 STATION, CLUSTER CONTROL UNIT (CCU) INTERFACE AND FLOW MONITORING WITH RADIO COMMUNICATION. ALL IN A SINGLE STAINLESS STEEL WALL MOUNTED ENCLOSURE. CONTACT RAIN BIRD SERVICES BEFORE CONTROLLER IS ORDERED TO COORDINATE A LINK SURVEY VISIT TO ENSURE PROPER ORDERING OF CONTROLLER.			

CONTROLLER AND STATION NUMBER
FLOW (GPM)
REMOTE CONTROL VALVE SIZE (IN INCHES)
ASSOCIATED REMOTE CONTROL VALVE

CONTROLLER AND STATION NUMBER
AREA (SQ. FT.)
FLOW (GPM)
REMOTE CONTROL VALVE SIZE (IN INCHES)
ASSOCIATED REMOTE CONTROL VALVE

MAIN LINE: 2" AND SMALLER: 1120-SCHEDULE 40 PVC PLASTIC PIPE WITH SCHEDULE 40 PVC SOLVENT WELD FITTINGS. 18" COVER.

LATERAL LINE: 3/4" AND LARGER: 1120-SCHEDULE 40 PVC PLASTIC PIPE WITH SCHEDULE 40 PVC SOLVENT WELD FITTINGS. 12" COVER.

SLEEVING: SCHEDULE 40 PVC PLASTIC PIPE. COVER TO BE AS INDICATED IN SPECIFICATIONS OR AS INDICATED ABOVE FOR PIPE DEPTH OF COVER.

DRIP LATERAL LINE: 3/4" AND LARGER: 1120-SCHEDULE 40 PVC PLASTIC PIPE WITH SCHEDULE 40 PVC SOLVENT WELD FITTINGS. 12" COVER.

PVC LATERAL
PVC SUPPLY HEADER
PVC EXHAUST HEADER

DRIPLINE REMOTE CONTROL VALVE

DRIP ZONE: RAIN BIRD XFS SERIES DRIPLINE WITH XF DRIPLINE INSERT FITTINGS, PART #XFS-06-12. TUBING TO BE INSTALLED 4" BELOW GRADE IN A 12" O.C. GRID ACCORDING TO DETAILS. SIZE EXHAUST HEADERS AS FOLLOWS: 1": 0-10 GPM, 1.25": 11-20 GPM. ALL EXHAUST HEADERS SHALL BE 1" SCH 40 PVC OR 1" SCH 40 FLEXIBLE PVC. USE SCH. 40 PVC SOLVENT WELD FITTINGS. EXTEND PVC HEADERS TO THE ENDS OF ALL DRIP ZONES TO BALANCE FLOW IF REQUIRED. SEE DETAILS FOR FURTHER INFORMATION.

PVC LATERAL

DRIPLINE REMOTE CONTROL VALVE

APPROXIMATE CONNECTION POINT BETWEEN DRIPLINE TUBING AND PVC SUPPLY WHEN DRIP ZONE IS LESS THAN 3 GPM AND NO PVC SUPPLY/EXHUST HEADERS ARE NEEDED. REFER TO DRIPLINE TUBING CONNECTION DETAIL FOR MORE INFORMATION.

NOTE:
ALL COPIES OF IRRIGATION INVOICES FOR ANY RAIN BIRD PRODUCTS USED ON THIS PROJECT TO BE RETAINED AND SUBMITTED TO STANFORD GROUNDS SERVICES. CONTACT DAVID REED (650) 444-6530

CAW ARCHITECTS

455 LAMBERT AVENUE PALO ALTO, CA 94306
WWW.CAWARCHITECTS.COM • 650.328.1818 • FAX: 650.328.1888

COPYRIGHT 2017 BY CAW ARCHITECTS, INC.

WILLIAM RAWN ASSOCIATES | Architects, Inc.
10 Post Office Sq.
Suite 1010
Boston, MA 02109

STAMP

LICENSED LANDSCAPE ARCHITECT
JOHN L. WONG
No. 1766
Signature
10/31/21
Renewal Date
08/20/21
Date
STATE OF CALIFORNIA

CONSULTANTS

swa

2200 Bridgeway
Sausalito, California
94965-1750
United States
www.swagroup.com
+1.415.332.5100 o

MILESTONE	DATE
ASA SUBMISSION	12.07.2020
ASA RESUBMITTAL	08.20.2021

PROJECT NAME

NORTH BUILDING
STANFORD UNIVERSITY
GRADUATE SCHOOL OF EDUCATION
485 LASUEN MALL
STANFORD, CA 94305

SHEET TITLE

IRRIGATION NOTES AND LEGEND

PROJECT NO. STFS801
DRAWN BY X. KUANG, H. ZHAO
CHECKED BY W. HYNES

SHEET

L4.00

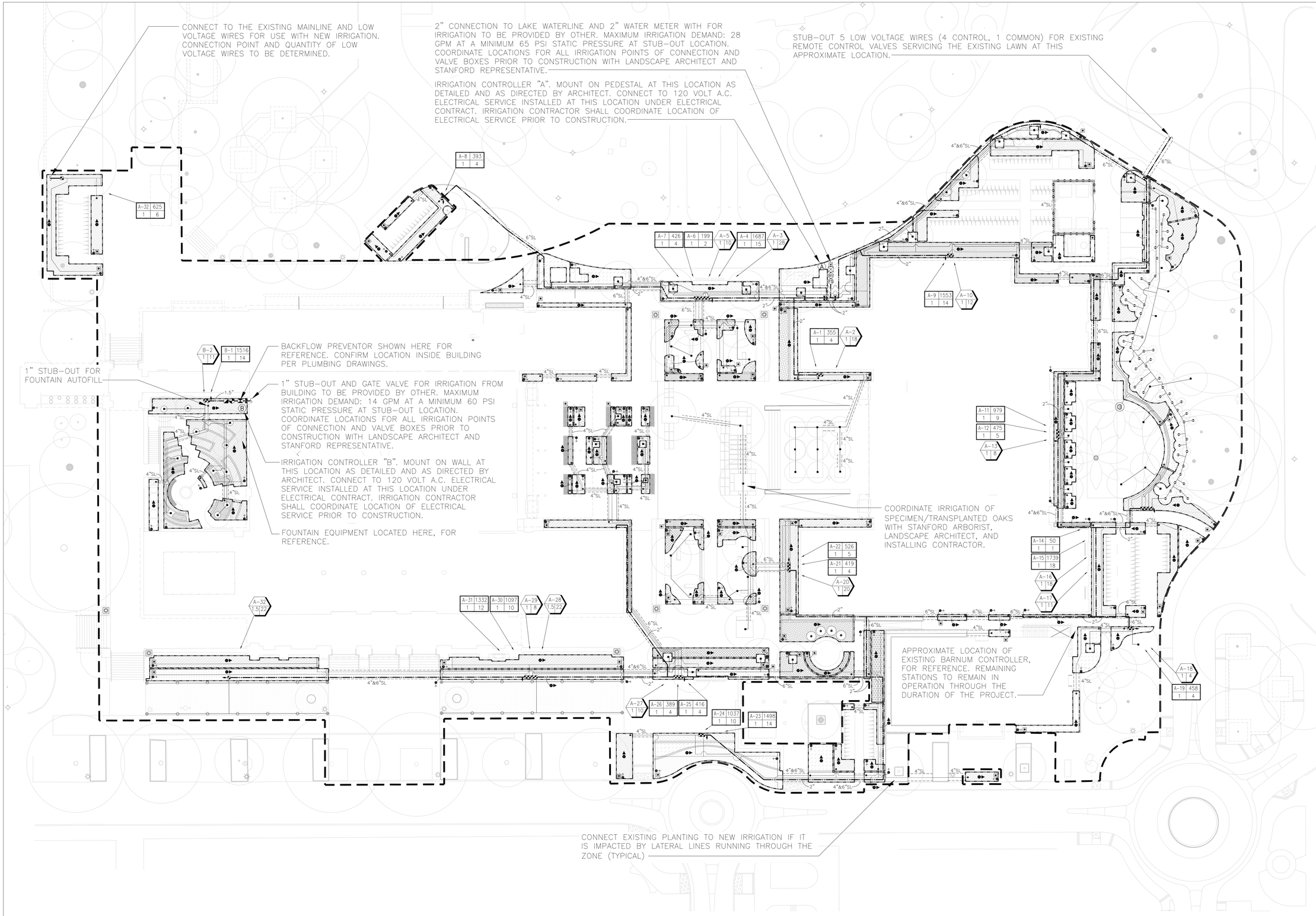

CAW ARCHITECTS

455 LAMBERT AVENUE PALO ALTO, CA 94306
WWW.CAWARCHITECTS.COM • 650.328.1818 • FAX: 650.328.1888

COPYRIGHT 2021 BY CAW ARCHITECTS, INC.

WILLIAM RAWN ASSOCIATES | Architects, Inc.
10 Post Office Sq.
Suite 1010
Boston, MA 02109

STAMP

LICENSED LANDSCAPE ARCHITECT · JOHN L. WONG · STATE OF CALIFORNIA
Signature 10/31/21
Renewal Date 08/20/21
Date

CONSULTANTS

swa

2200 Bridgeway
Sausalito, California
94965-1750
United States
www.swagroup.com
+1.415.332.5100 o

MILESTONE	DATE
ASA SUBMISSION	12.07.2020
ASA RESUBMITTAL	08.20.2021

PROJECT NAME

NORTH BUILDING
STANFORD UNIVERSITY
GRADUATE SCHOOL OF EDUCATION
485 LASUEN MALL
STANFORD, CA 94305

SHEET TITLE

IRRIGATION PLAN

PROJECT NO. STFS801
DRAWN BY X. KUANG, H. ZHAO
CHECKED BY W. HYNES

SHEET

L4.01

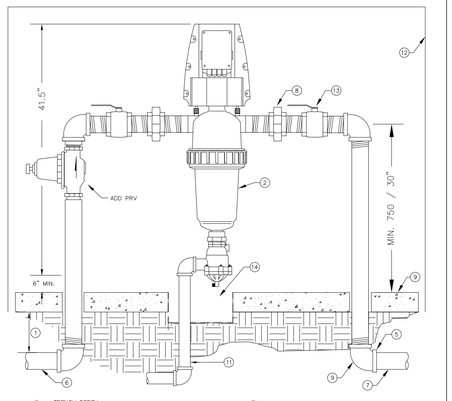

1. TRENCH DEPTH, REFER TO SPECIFICATIONS
2. AMIAD 2" TAF-750 FILTER WITH CARTRIDGE DISC.
3. THREADED BRASS PIPING AND FITTINGS EXTENDED 6" BEYOND CONCRETE PAD.
4. 6" THICK CONCRETE PAD FOR ENCLOSURE
5. PVC SCHEDULE 80 COUPLER SXT (TWO REQUIRED)
6. MINIMUM 2" WATER SOURCE, AS REQUIRED
7. 2" PVC PRESSURE SUPPLY LINE THROUGHOUT SYSTEM
8. BRASS UNION INSTALLED ON TOP NEXT TO FILTER
9. BRASS 90 DEGREE ELL (4 REQUIRED)
10. PURGE VALVE AS PART OF VALVE ASSEMBLY – 6" MINIMUM BOTTOM CLEARANCE
11. 1 1/2" DIAMETER PVC PIPE TO AND THROUGH THE NEAREST CUBE, CORE AND EXTEND TO DRAIN. PROVIDE ALL REQUIRED FITTINGS TO MAKE PROPER CONNECTION AND DISSASSEMBLY TO THE PURGE VALVE.
12. LE MEUR ENCLOSURE SEE FDG IR-04
13. BRASS ISOLATION BALL VALVE
14. CENTER 9"SQUARE CATCH BASIN AT CONCRETE PAD HEIGHT FOR REMOVAL OF FILTER CARTRIDGE SERVICE

NOTE: PROVIDE A 110 VAC POWER SOURCE FOR THE AMIAD TAF-750 LAKE WATER FILTER CONTROLLER. 110 VAC POWER PROVIDED BY OTHERS. THE LANDSCAPE CONTRACTOR SHALL COORDINATE THE POWER WIRES FROM THE SOURCE TO THE FILTER CONTROLLER AND MAKE THE FINAL HOOK-UP. ALL 100 VAC POWER WIRING SHALL BE INSTALLED PER CODE BY A LICENSED ELECTRICAL CONTRACTOR.
- EACH SITE HAS ITS OWN POC AND FILTER

STANFORD UNIVERSITY FACILITY OPERATIONS				DWG.
Drawing Title: LAKE WATER FILTER INSTALLATION				IR-03
Scale: NTS	Check: GROUNDS	Rev. By: JEM	Rev. Date: 03/02/2020	

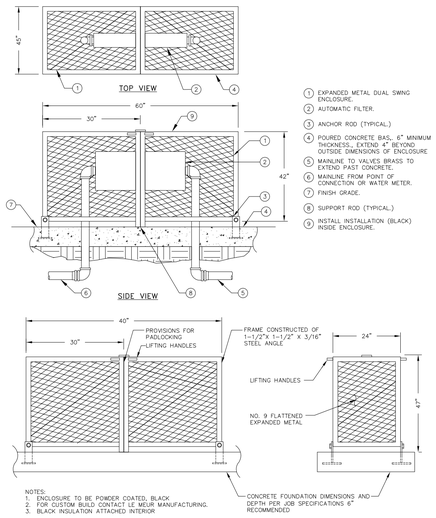

1. EXPANDED METAL DUAL SWING ENCLOSURE.
2. AUTOMATIC FILTER.
3. ANCHOR ROD (TYPICAL.)
4. POURED CONCRETE BAS,. 6" MINIMUM THICKNESS., EXTEND 4" BEYOND OUTSIDE DIMENSIONS OF ENCLOSURE
5. MAINLINE TO VALVES BRASS TO EXTEND PAST CONCRETE.
6. MAINLINE FROM POINT OF CONNECTION OR WATER METER.
7. FINISH GRADE.
8. SUPPORT ROD (TYPICAL.)
9. INSTALL INSTALLATION (BLACK) INSIDE ENCLOSURE.

NOTES:
1. ENCLOSURE TO BE POWDER COATED, BLACK
2. FOR CUSTOM BUILD CONTACT LE MEUR MANUFACTURING.
3. BLACK INSULATION ATTACHED INTERIOR

LAKE WATER FILTER ENCLOSURE LE MEUR MANUFACTURING (TWO PIECE) FOR AMIAD SELF-FLUSHING FILTER

ELEVATION VIEW

STANFORD UNIVERSITY FACILITY OPERATIONS				DWG.
Drawing Title: LAKE WATER FILTER ENCLOSURE INSTALLATION				IR-04
Scale: NTS	Check: GROUNDS	Rev. By: OG	Rev. Date: 03/02/2020	

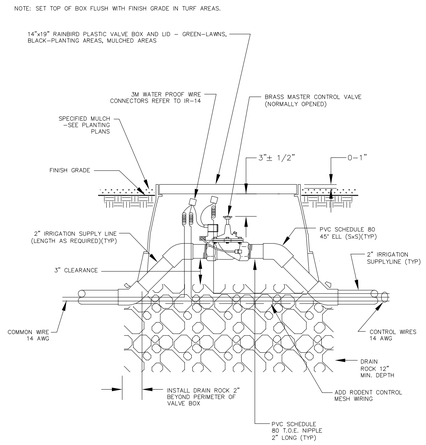

STANFORD UNIVERSITY FACILITY OPERATIONS				DWG.
Drawing Title: MASTER CONTROL VALVE INSTALLATION				IR-05
Scale: NTS	Check: GROUNDS	Rev. By: JEM	Rev. Date: 03/02/2020	

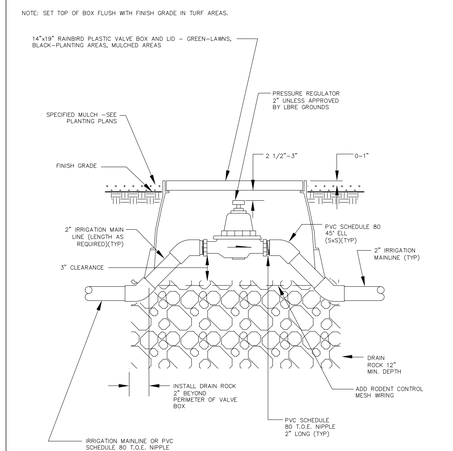

STANFORD UNIVERSITY FACILITY OPERATIONS				DWG.
Drawing Title: MASTER PRESSURE REGULATOR INSTALLATION				IR-02
Scale: NTS	Check: GROUNDS	Rev. By: JEM	Rev. Date: 03/02/2020	

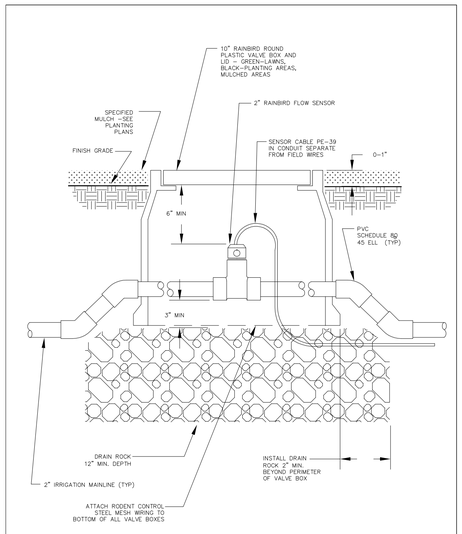

NOTE:
1. SET TOP OF BOX EVEN WITH FINISH GRADE IN TURF AREAS.
2. STRAIGHT UNOBSTRUCTED PIPE TO ENSURE PROPER FLOW READING. ALLOW 10 X PIPE DIAMETER FOR UPSTREAM LENGTH AND 5 X PIPE DIAMETER FOR DOWNSTREAM LENGTH FROM SENSOR.

STANFORD UNIVERSITY FACILITY OPERATIONS				DWG.
Drawing Title: FLOW SENSOR INSTALLATION				IR-06
Scale: NTS	Check: GROUNDS	Rev. By: JEM	Rev. Date: 03/02/2020	

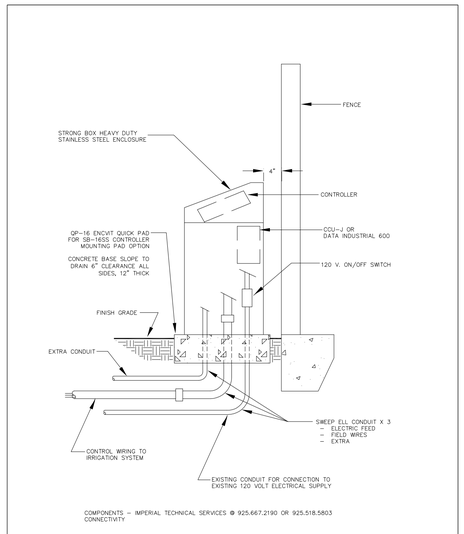

COMPONENTS – IMPERIAL TECHNICAL SERVICES @ 925.667.2190 OR 925.518.5803 CONNECTIVITY

NOTE:
CONTROLLER GROUNDED PROPERLY PER ARTICLE 250 OF THE NATIONAL ELECTRIC CODE AND CONFORM TO LOCAL REGULATIONS.

STANFORD UNIVERSITY FACILITY OPERATIONS				DWG.
Drawing Title: PEDESTAL MOUNT CONTROLLER INSTALLATION				IR-09
Scale: NTS	Check: GROUNDS	Rev. By: JEM	Rev. Date: 03/06/2020	

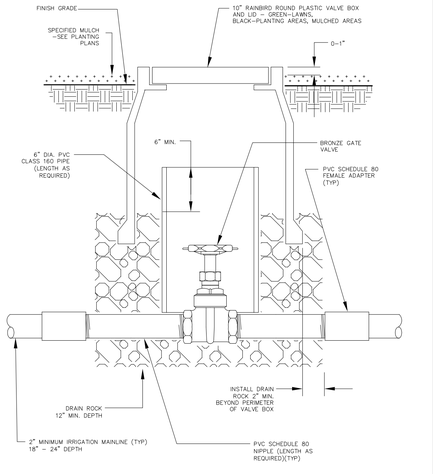

NOTE: SET TOP OF BOX EVEN WITH FINISH GRADE IN TURF AREAS.

STANFORD UNIVERSITY FACILITY OPERATIONS				DWG.
Drawing Title: 2 1/2" AND SMALLER GATE VALVE INSTALLATION				IR-16
Scale: NTS	Check: GROUNDS	Rev. By: JEM	Rev. Date: 11/30/15	

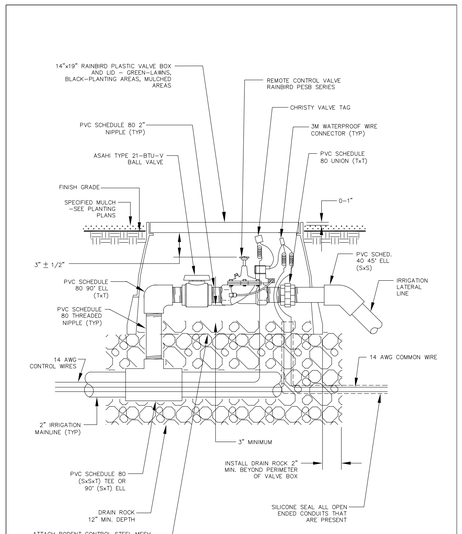

NOTE: SET TOP OF BOX FLUSH WITH FINISH GRADE IN TURF AREAS.

STANFORD UNIVERSITY FACILITY OPERATIONS				DWG.
Drawing Title: REMOTE CONTROL VALVE ASSEMBLY				IR-11
Scale: NTS	Check: GROUNDS	Rev. By: JEM	Rev. Date: 03/02/2020	

CAW ARCHITECTS
455 LAMBERT AVENUE PALO ALTO, CA 94306
WWW.CAWARCHITECTS.COM • 650.328.1818 • FAX: 650.328.1888

COPYRIGHT 2017 BY CAW ARCHITECTS, INC.

WILLIAM RAWN ASSOCIATES | Architects, Inc.
10 Post Office Sq.
Suite 1010
Boston, MA 02109

STAMP

LICENSED LANDSCAPE ARCHITECT – JOHN L. WONG – No. 3709 – Signature – Renewal Date 08/20/21 – Date – STATE OF CALIFORNIA

CONSULTANTS

swa
2200 Bridgeway
Sausalito, California
94965–1750
United States
www.swagroup.com
+1.415.332.5100 o

MILESTONE	DATE
ASA SUBMISSION	12.07.2020
ASA RESUBMITTAL	08.20.2021

PROJECT NAME

NORTH BUILDING
STANFORD UNIVERSITY
GRADUATE SCHOOL
OF EDUCATION
485 LASUEN MALL
STANFORD, CA 94305

SHEET TITLE

IRRIGATION DETAILS

PROJECT NO. STFS801
DRAWN BY X. KUANG, H. ZHAO
CHECKED BY W. HYNES

SHEET

L4.02

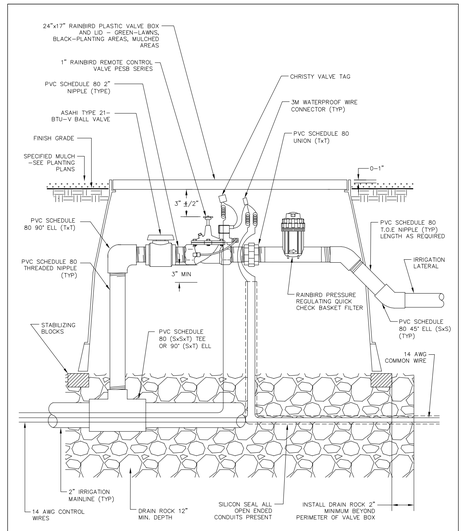

NOTE: SET TOP OF BOX FLUSH WITH FINISH GRADE IN TURF AREAS.

STANFORD UNIVERSITY FACILITY OPERATIONS				DWG.
Drawing Title: 1" DRIP VALVE ASSEMBLY INSTALLATION - LOW FLOW				IR-12
Scale: NTS	Check: GROUNDS	Rev. By: JEM	Rev. Date: 11/30/15	

3M DB SYSTEM INSTALLATION SPECIFICATIONS

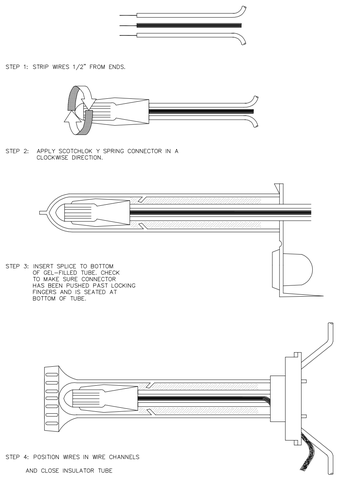

STEP 1: STRIP WIRES 1/2" FROM ENDS.

STEP 2: APPLY SCOTCHLOK Y SPRING CONNECTOR IN A CLOCKWISE DIRECTION.

STEP 3: INSERT SPLICE TO BOTTOM OF GEL-FILLED TUBE. CHECK TO MAKE SURE CONNECTOR HAS BEEN PUSHED PAST LOCKING FINGERS AND IS SEATED AT BOTTOM OF TUBE.

STEP 4: POSITION WIRES IN WIRE CHANNELS AND CLOSE INSULATOR TUBE COVER.

NOTE: MAXIMUM WIRE SIZES PER CONNECTOR ARE 3 - #14'S OR 2 - #12'S.

STANFORD UNIVERSITY FACILITY OPERATIONS				DWG.
Drawing Title: 3M DIRECT BURY WIRE SPLICE				IR-14
Scale: NTS	Check: GROUNDS	Rev. By: JEM	Rev. Date: 03/04/2020	

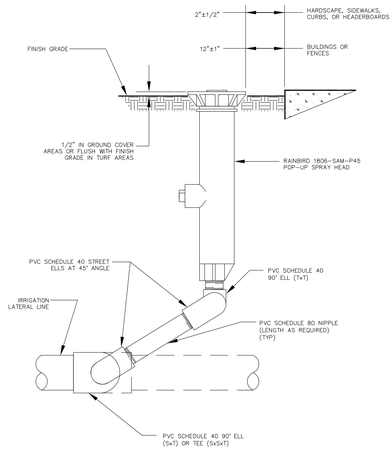

NOTE: DOUBLE SWING JOINT AT 45° REQUIRED - HUNTER MP ROTATOR NOZZLES (LOW VOLUME) OPTIONAL

STANFORD UNIVERSITY FACILITY OPERATIONS				DWG.
Drawing Title: POP-UP SPRAY INSTALLATION				IR-20
Scale: NTS	Check: GROUNDS	Rev. By: JEM	Rev. Date: 03/04/2020	

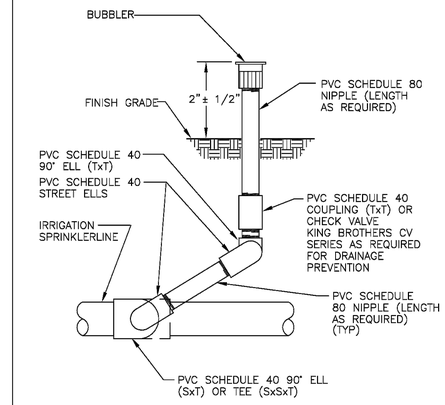

STANFORD UNIVERSITY FACILITY OPERATIONS				DWG.
Drawing Title: BUBBLER RISER ASSEMBLY				IR-23
Scale: NTS	Check:	Rev. By: I.S.C.	Rev. Date: 06/20/95	

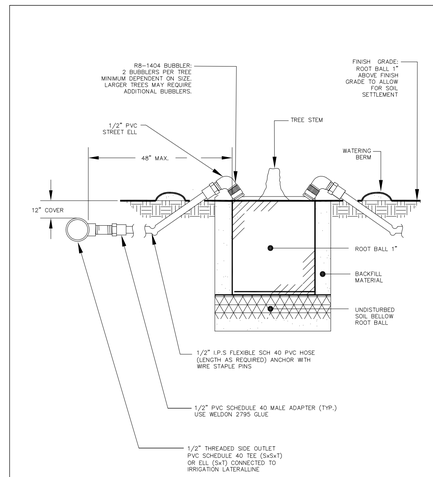

NOTE:
1. INSTALL BUBBLER ABOVE ROOT BALL. INSTALL BUBBLERS EVENLY SPACED ON UPHILL SIDE OF PLANT. IF ON STEEP HILL, ANCHOR FLEX HOSE WITH WIRE STAPLE PINS TO HOLD IN PLACE.
2. PRESET BUBBLER 1.0 GPM FOR TREES - EVEN WATER COVERAGE REQUIRED TO FILL WATER BASIN COMPLETELY FROM OUTER EDGE OF ROOT BALL.

STANFORD UNIVERSITY FACILITY OPERATIONS				DWG.
Drawing Title: BUBBLER IRRIGATION FOR TREES				IR-22
Scale: NTS	Check: GROUNDS	Rev. By: JEM	Rev. Date: 03/04/2020	

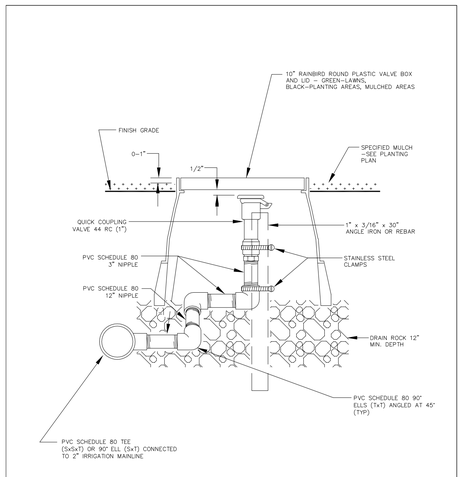

NOTE:
1. SET TOP OF BOX EVEN WITH FINISH GRADE IN TURF AREAS.
2. REFER TO WRITTEN SPECIFICATION DOCUMENTATION. INSTALL ONE QC EVERY 100 FEET.

STANFORD UNIVERSITY FACILITY OPERATIONS				DWG.
Drawing Title: QUICK COUPLING VALVE INSTALLATION				IR-19
Scale: NTS	Check: GROUNDS	Rev. By: JEM	Rev. Date: 03/04/2020	

SPECIFICATION RAIN BIRD VB SERIES VALVE BOXES
GREEN - LAWN
BLACK - PLANTING AREAS & MULCHED AREAS

NOTES:
1. CENTER BOXES OVER VALVES.
2. SET BOXES IN GROUND COVER/SHRUB AREA TO AVOID LAWNS.
3. SET BOXES PARALLEL TO EACH OTHER, LEVEL AND PERPENDICULAR TO EDGE.
4. AVOID HEAVILY COMPACTING SOIL AROUND BOXES TO PREVENT DAMAGING VALVE BOXES.
5. LOCATE ON SIDE PATHS OR SERVICE AREAS, NOT ALONG MAIN WALKWAYS OR ENTRIES. UA/CPD AND GROUNDS TO APPROVE FINAL LOCATIONS BEFORE SYSTEM DESIGN IS FINALIZED.
6. ADD RODENT CONTROL STEEL MESH WIRING TO BOTTOM OF ALL VALVE BOXES

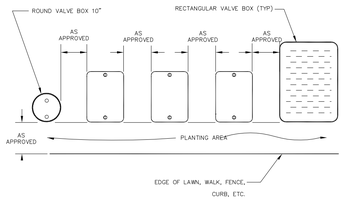

PLAN VIEW

STANFORD UNIVERSITY FACILITY OPERATIONS				DWG.
Drawing Title: VALVE BOX INSTALLATION				IR-08
Scale: NTS	Check: GROUNDS	Rev. By: O.G.	Rev. Date: 03/02/2020	

NOTE: PROVIDE 15" COVER FOR ROTOR SYSTEM LATERAL LINES.

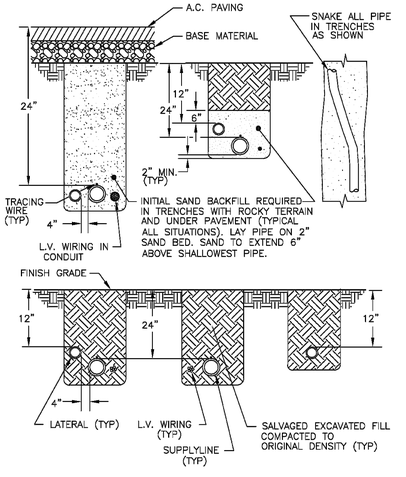

STANFORD UNIVERSITY FACILITY OPERATIONS				DWG.
Drawing Title: TRENCHING				IR-01
Scale: NTS	Check:	Rev. By: I.S.C.	Rev. Date: 06/20/95	

CAW ARCHITECTS
455 LAMBERT AVENUE PALO ALTO, CA 94306
WWW.CAWARCHITECTS.COM • 650.328.1818 • FAX: 650.328.1888

COPYRIGHT 2017 BY CAW ARCHITECTS, INC.

WILLIAM RAWN ASSOCIATES | Architects, Inc.
10 Post Office Sq.
Suite 1010
Boston, MA 02109

STAMP

LICENSED LANDSCAPE ARCHITECT — JOHN L. WONG — No. 3709 — Signature 10/31/21 Renewal Date — 08/20/21 Date — STATE OF CALIFORNIA

CONSULTANTS

swa
2200 Bridgeway
Sausalito, California
94965-1750
United States
www.swagroup.com
+1.415.332.5100 o

MILESTONE	DATE
ASA SUBMISSION	12.07.2020
ASA RESUBMITTAL	08.20.2021

PROJECT NAME

NORTH BUILDING
STANFORD UNIVERSITY
GRADUATE SCHOOL
OF EDUCATION
485 LASUEN MALL
STANFORD, CA 94305

SHEET TITLE

IRRIGATION DETAILS

PROJECT NO. STFS801
DRAWN BY X. KUANG, H. ZHAO
CHECKED BY W. HYNES

SHEET

L4.03

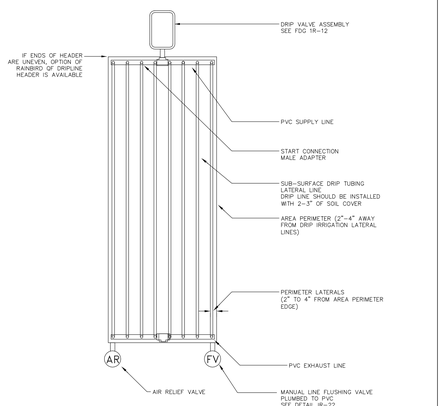

SUB SURFACE DRIP IRRIGATION FOR SHRUB PLANTING – END FEED LAYOUT

PLAN VIEW

NOTE: ADD EXTRA FLUSH VALVE IF ZONE SEPARATES IN DIFFERENT DIRECTION. REFER TO RAINBIRD XFS-09-12 WITH COPPER SHIELD SPECIFICATION FOR FLUSH VALVE INSTALLATION AND MAXIMUM LINEAR FEET PER ZONE. ADDITIONAL LAYOUT OPTIONS REFER TO RAINBIRD ONLINE SPECIFICATIONS.

STANFORD UNIVERSITY FACILITY OPERATIONS				DWG.
Drawing Title: SUB SURFACE DRIP IRR. FOR SHRUB/TURF PLANTING-END FEED				IR-24
Scale: NTS	Check: GROUNDS	Rev. By: JEM	Rev. Date: 3/04/2020	

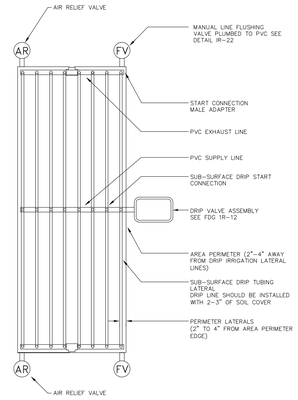

SUB SURFACE DRIP IRRIGATION FOR SHRUB PLANTING – CENTER FEED LAYOUT

PLAN VIEW

NOTE: ADD EXTRA FLUSH VALVE IF ZONE SEPARATES IN DIFFERENT DIRECTION. REFER TO RAINBIRD XFS-09-12 WITH COPPER SHIELD SPECIFICATION FOR FLUSH VALVE INSTALLATION AND MAXIMUM LINEAR FEET PER ZONE. ADDITIONAL LAYOUT OPTIONS REFER TO RAINBIRD ONLINE SPECIFICATIONS.

STANFORD UNIVERSITY FACILITY OPERATIONS				DWG.
Drawing Title: SUB SURFACE DRIP IRR. FOR SHRUB/TURF PLANTING-CENTER FEED				IR-25
Scale: NTS	Check: GROUNDS	Rev. By: O.G.	Rev. Date: 03/04/2020	

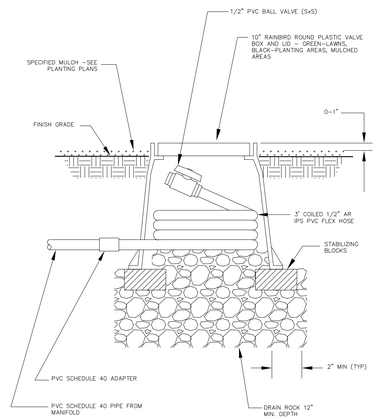

STANFORD UNIVERSITY FACILITY OPERATIONS				DWG.
Drawing Title: SUB-SURFACE DRIP IRRIGATION FLUSH VALVE INSTALLATION				IR-26
Scale: NTS	Check: GROUNDS	Rev. By: JEM	Rev. Date: 03/04/2020	

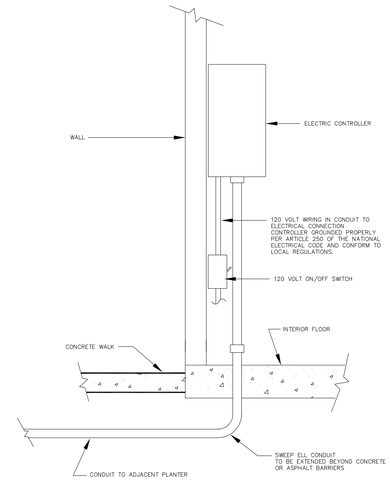

NOTE:
WALL MOUNT ONLY IF SPECIFIED BY U.A. PLANNING DEPARTMENT

STANFORD UNIVERSITY FACILITY OPERATIONS				DWG.
Drawing Title: WALL MOUNT CONTROLLER ASSEMBLY				IR-10
Scale: NTS	Check: GROUNDS	Rev. By: JEM	Rev. Date: 11/30/15	

WATER USE ESTIMATION - STANFORD, GRADUTE SCHOOL OF EDUCATION

WATER TYPE	LAKE
SITE ETO=	43.4
	10/9/2020

REGULAR LANDSCAPE AREAS

HYDROZONE #	HYDROZONE NAME	PLANT WATER USE TYPE	PLANT FACTOR (PF)	IRRIGATION METHOD	IRRIGATION EFFICIENCY	ETAF (PF/IE)	AREA (SQ. FT) (HA)	ETAF X AREA (HA)	ETWU (GAL/YR)	ACRE FEET/ YEAR	HCF/ YEAR	PERCENTAGE OF LANDSCAPE
1	SHRUBS/GROUNDCOVER	LOW	0.2	DRIP	0.81	0.247	6,850	**1,691**	45,511	0.14	60.84	23%
2	SHRUBS/GROUNDCOVER	MOD	0.4	DRIP	0.81	0.494	8,726	**4,309**	115,950	0.38	155.01	30%
3	SHRUBS	LOW	0.2	BUBBLER	0.81	0.247	740	**183**	4,917	0.02	6.57	3%
4	TURF	HIGH	0.7	SPRAY	0.75	0.933	2,664	**2,486**	66,904	0.21	89.44	9%
5	TREES	LOW	0.2	BUBBLER	0.81	0.247	7,000	**1,728**	46,508	0.14	62.18	24%
6	TREES	MOD	0.4	BUBBLER	0.81	0.494	998	**493**	13,261	0.04	17.73	3%
7	TREES	HIGH	0.7	BUBBLER	0.81	0.864	2,439	**2,108**	56,716	0.17	75.82	8%
8	WATER FEATURE	HIGH			1	0.700	27					0%
					TOTALS		**29,444**	**13,018**	**350,275**	**1.07**	**468.28**	**100%**

SPECIAL LANDSCAPE AREAS

HYDROZONE #	HYDROZONE NAME											
					1							0%
					TOTALS							0%

MAWA	GALLONS/YR	356,526
	ACRE FEET/YR	1.09
	HCF/YR	476.64
ETWU	GALLONS/YR	350,275
	ACRE FEET/YR	1.07
	HCF/YR	468.28

MAWA FORMULA
MAXIMUM APPLIED WATER ALLOWANCE (MAWA) GALLONS PER YEAR
MAWA = (ETo)(0.62)[(LA x 0.45) + (0.55 x SLA)]
ETo = REFERENCE EVAPOTRANSPIRATION
0.55= ET ADJUSTMENT FACTOR
LA=LANDSCAPED AREA (SQUARE FEET)
0.62 = CONVERSION FACTOR (GALLONS/SQ.FT/YR)

ETWU FORMULA
ESTIMATED TOTAL WATER USE (ETWU) GALLONS PER YEAR
ETWU= ((ETO)(.62)(ETAF x LA))
ETo = REFERENCE EVAPOTRANSPIRATION
PF = PLANT FACTOR FOR HYDROZONES
HA = HYDROZONE AREA (SQ.FT)
0.62 = CONVERSION FACTOR (GALLONS/SQ.FT/YR)
IE = IRRIGATION EFFICIENCY (0.81)-BUBBLER/DRIP
IE = IRRIGATION EFFICIENCY (0.75)-ROTORS/SPRAY

SITE IRRIGATION EFFICIENCY	SITE PLANT FACTOR	MAWA COMPLIANT
80.5%	0.35	YES

ETAF Calculations	
REGULAR LANDSCAPE AREAS	
TOTAL ETAF x AREA	13,018
TOTAL AREA	29,444
AVG. ETAF	44.21%

NOTE:
IRRIGATION TO BE SERVED BY LAKE.

CAW ARCHITECTS
455 LAMBERT AVENUE PALO ALTO, CA 94306
WWW.CAWARCHITECTS.COM • 650.328.1818 • FAX: 650.328.1888

COPYRIGHT 2017 BY CAW ARCHITECTS, INC.

WILLIAM RAWN ASSOCIATES | Architects, Inc.
10 Post Office Sq.
Suite 1010
Boston, MA 02109

STAMP

LICENSED LANDSCAPE ARCHITECT · JOHN L. WONG · No. 3706 · Signature 10/31/21 · Renewal Date 08/20/21 Date · STATE OF CALIFORNIA

CONSULTANTS

swa
2200 Bridgeway
Sausalito, California
94965-1750
United States
www.swagroup.com
+1.415.332.5100 o

MILESTONE	DATE
ASA SUBMISSION	12.07.2020
ASA RESUBMITTAL	08.20.2021

PROJECT NAME

NORTH BUILDING
STANFORD UNIVERSITY
GRADUATE SCHOOL
OF EDUCATION
485 LASUEN MALL
STANFORD, CA 94305

SHEET TITLE

IRRIGATION DETAILS

PROJECT NO. STFS801
DRAWN BY X. KUANG, H. ZHAO
CHECKED BY W. HYNES

SHEET

L4.04

GENERAL NOTES

1. ALL COLUMNS AND CONCRETE WALLS, BOTH EXISTING AND NEW, TO RECEIVE NEW FURRING, U.O.N.
2. COLUMNS AND BEAMS AROUND STAIRS, ELEVATORS, AND DUCT SHAFTS TO BE PROTECTED WITH 1-HOUR RATED SPRAY-APPLIED FIREPROOFING OR GYPSUM BOARD, TYPICAL.
3. LOOSE FURNITURE SHOWN FOR REFERENCE ONLY, N.I.C.
4. ALL FIRST FLOOR AND BASEMENT EXTERIOR DOORS TO BE KEY-CARD ACCESS DOORS

FLOOR PLAN LEGEND

EXISTING WALL

NEW WALL

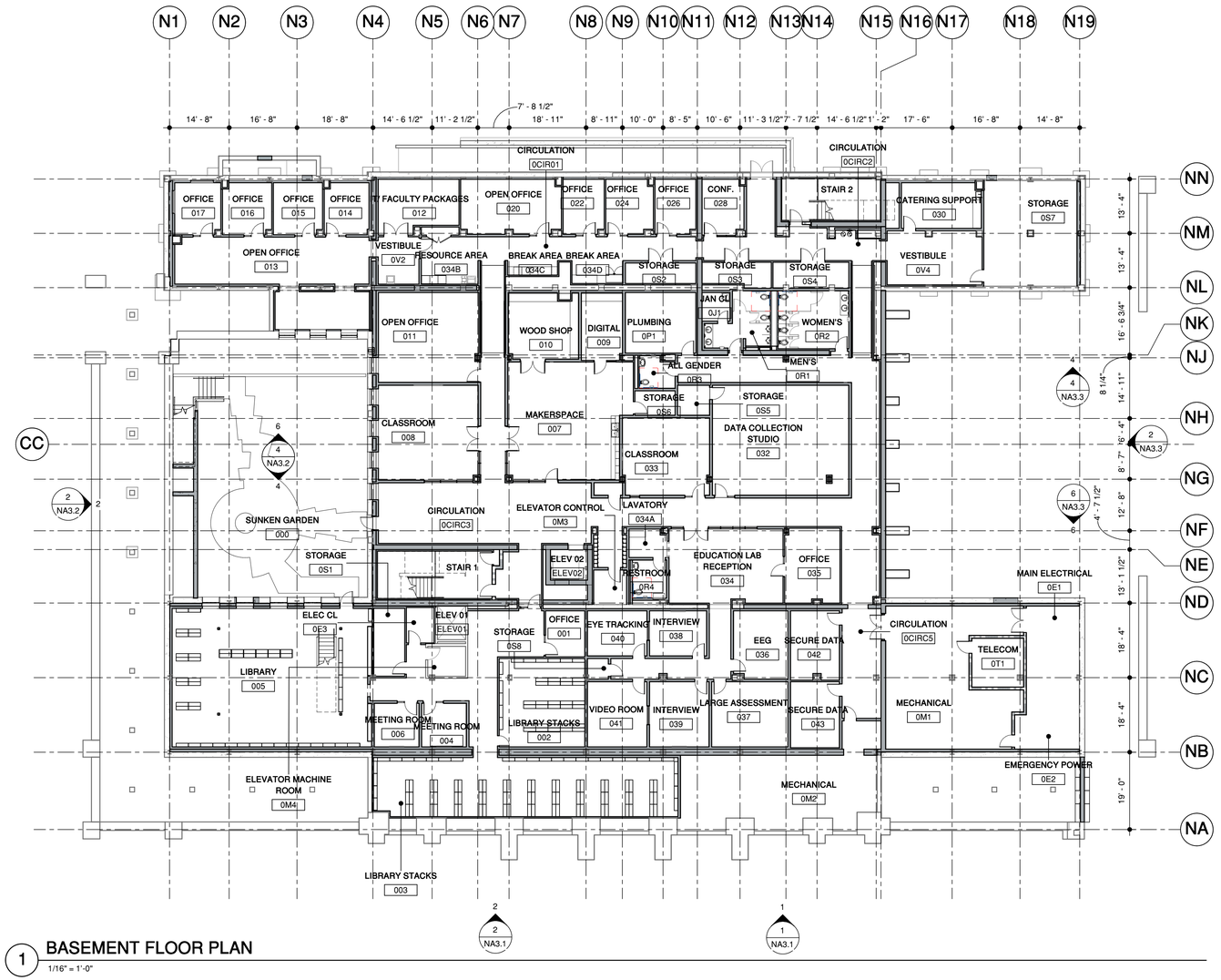

1 BASEMENT FLOOR PLAN

1/16" = 1'-0"

TRUE NORTH N

CAW ARCHITECTS

455 LAMBERT AVENUE PALO ALTO, CA 94306

WWW.CAWARCHITECTS.COM • 650.328.1818 • FAX: 650.328.1888

COPYRIGHT 2007 BY CAW ARCHITECTS, INC.

WILLIAM RAWN ASSOCIATES | Architects, Inc.

10 Post Office Sq.
Suite 1010
Boston, MA 02109

STAMP

LICENSED ARCHITECT CHRISTOPHER SCOTT WAINEY C-22197 REN. 04-30-12 STATE OF CALIFORNIA

CONSULTANTS

MILESTONE	DATE
ASA SUBMISSION	12/07/2020
ASA RESUBMISSION	08/20/2021

PROJECT NAME

NORTH BUILDING

GRADUATE SCHOOL OF EDUCATION

485 LASUEN MALL

STANFORD, CA 94305

SHEET TITLE

NB BASEMENT FLOOR PLAN

PROJECT NO. 17013

DRAWN BY TK / AS

CHECKED BY MA

SHEET

NA1.0

8/19/2021 10:14:12 PM

GENERAL NOTES

1. ALL COLUMNS AND CONCRETE WALLS, BOTH EXISTING AND NEW, TO RECEIVE NEW FURRING, U.O.N.
2. COLUMNS AND BEAMS AROUND STAIRS, ELEVATORS, AND DUCT SHAFTS TO BE PROTECTED WITH 1-HOUR RATED SPRAY-APPLIED FIREPROOFING OR GYPSUM BOARD, TYPICAL.
3. LOOSE FURNITURE SHOWN FOR REFERENCE ONLY, N.I.C.
4. ALL FIRST FLOOR AND BASEMENT EXTERIOR DOORS TO BE KEY-CARD ACCESS DOORS

FLOOR PLAN LEGEND

EXISTING WALL

NEW WALL

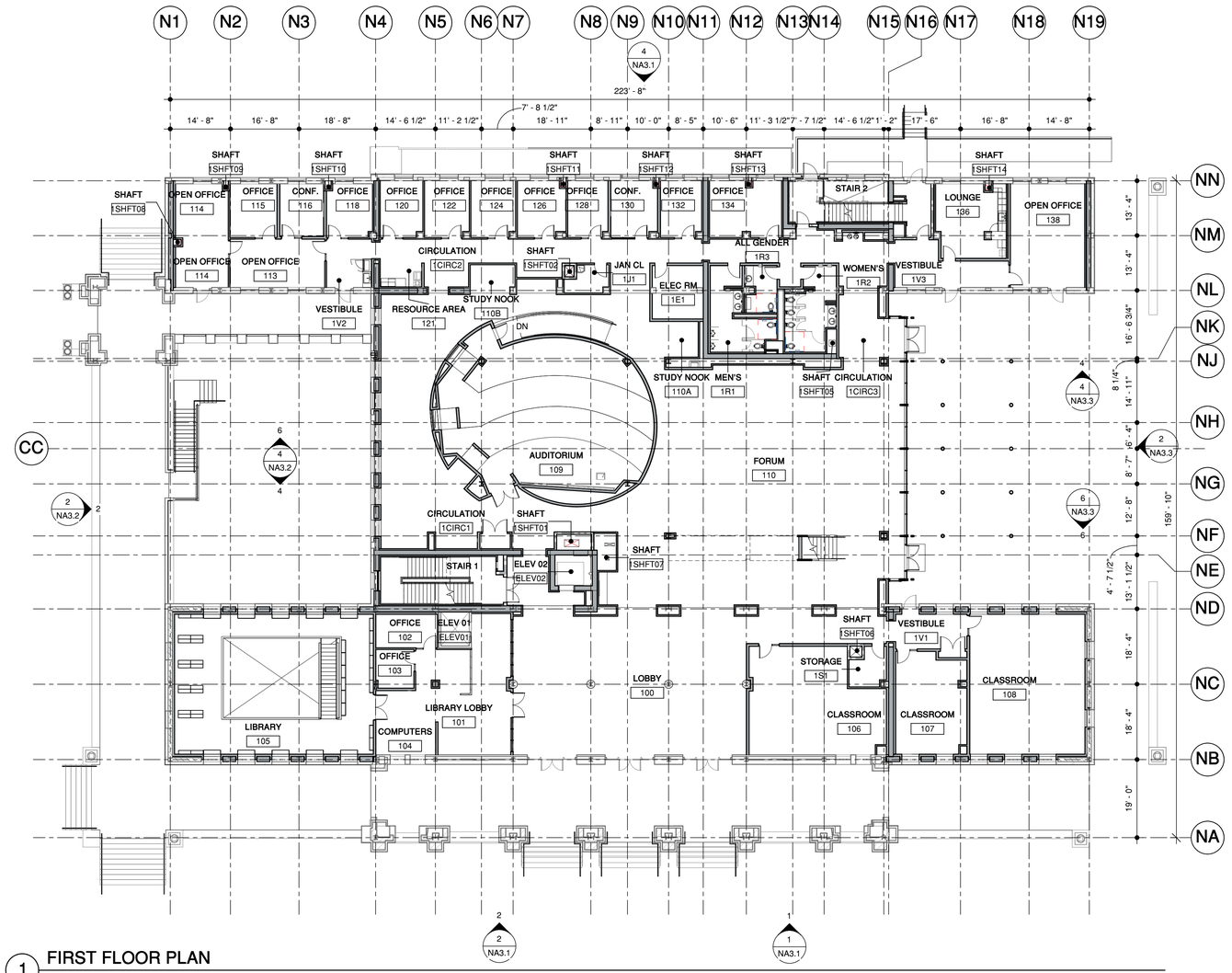

1 FIRST FLOOR PLAN

1/16" = 1'-0"

TRUE NORTH N

CAW ARCHITECTS

455 LAMBERT AVENUE PALO ALTO, CA 94306

WWW.CAWARCHITECTS.COM • 650.328.1818 • FAX: 650.328.1888

COPYRIGHT 2007 BY CAW ARCHITECTS, INC.

WILLIAM RAWN ASSOCIATES | Architects, Inc.

10 Post Office Sq.
Suite 1010
Boston, MA 02109

STAMP

LICENSED ARCHITECT
CHRISTOPHER SCOTT WAINEY
C-22197
REN. 04-30-12
STATE OF CALIFORNIA

CONSULTANTS

MILESTONE	DATE
ASA SUBMISSION	12/07/2020
ASA RESUBMISSION	08/20/2021

PROJECT NAME

NORTH BUILDING

GRADUATE SCHOOL OF EDUCATION

485 LASUEN MALL

STANFORD, CA 94305

SHEET TITLE

NB FIRST FLOOR PLAN

PROJECT NO. 17013

DRAWN BY TK / AS

CHECKED BY MA

SHEET

NA1.1

8/19/2021 10:14:17 PM

GENERAL NOTES

1. ALL COLUMNS AND CONCRETE WALLS, BOTH EXISTING AND NEW, TO RECEIVE NEW FURRING, U.O.N.
2. COLUMNS AND BEAMS AROUND STAIRS, ELEVATORS, AND DUCT SHAFTS TO BE PROTECTED WITH 1-HOUR RATED SPRAY-APPLIED FIREPROOFING OR GYPSUM BOARD, TYPICAL.
3. LOOSE FURNITURE SHOWN FOR REFERENCE ONLY, N.I.C.
4. ALL FIRST FLOOR AND BASEMENT EXTERIOR DOORS TO BE KEY-CARD ACCESS DOORS

FLOOR PLAN LEGEND

EXISTING WALL

NEW WALL

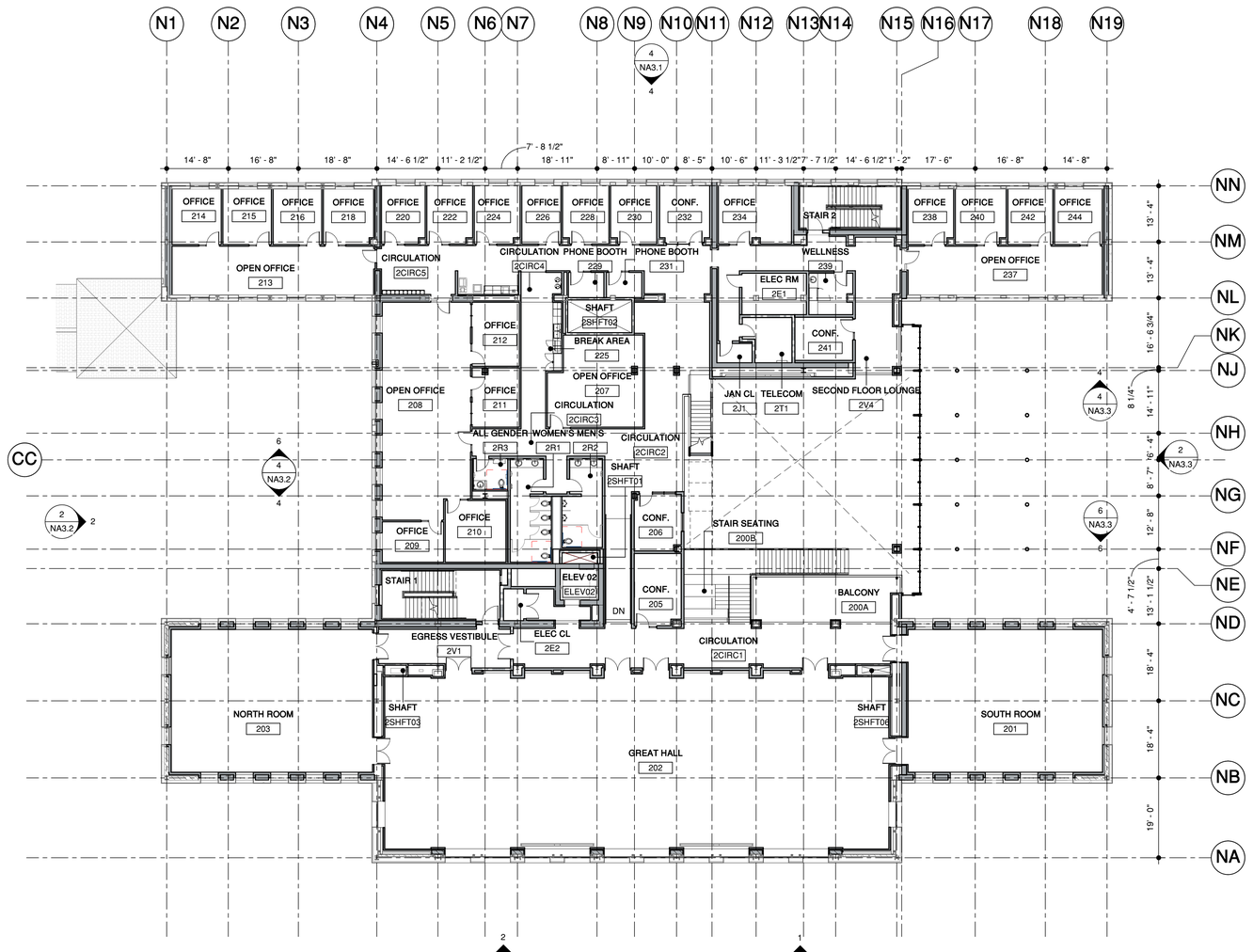

1 SECOND FLOOR PLAN

1/16" = 1'-0"

CAW ARCHITECTS

455 LAMBERT AVENUE PALO ALTO, CA 94306

WWW.CAWARCHITECTS.COM • 650.328.1818 • FAX: 650.328.1888

COPYRIGHT 2007 BY CAW ARCHITECTS, INC.

WILLIAM RAWN ASSOCIATES | Architects, Inc.

10 Post Office Sq.
Suite 1010
Boston, MA 02109

STAMP

LICENSED ARCHITECT CHRISTOPHER SCOTT WAINEY C-22197 REN. 04-30-22 STATE OF CALIFORNIA

CONSULTANTS

MILESTONE	DATE
ASA SUBMISSION	12/07/2020
ASA RESUBMISSION	08/20/2021

PROJECT NAME

NORTH BUILDING

GRADUATE SCHOOL OF EDUCATION

485 LASUEN MALL

STANFORD, CA 94305

SHEET TITLE

NB SECOND FLOOR PLAN

PROJECT NO. 17013

DRAWN BY TK / AS

CHECKED BY MA

SHEET

NA1.2

8/19/2021 10:14:22 PM

GENERAL NOTES

1. ALL COLUMNS AND CONCRETE WALLS, BOTH EXISTING AND NEW, TO RECEIVE NEW FURRING, U.O.N.
2. COLUMNS AND BEAMS AROUND STAIRS, ELEVATORS, AND DUCT SHAFTS TO BE PROTECTED WITH 1-HOUR RATED SPRAY-APPLIED FIREPROOFING OR GYPSUM BOARD, TYPICAL.
3. LOOSE FURNITURE SHOWN FOR REFERENCE ONLY, N.I.C.
4. ALL FIRST FLOOR AND BASEMENT EXTERIOR DOORS TO BE KEY-CARD ACCESS DOORS

FLOOR PLAN LEGEND

EXISTING WALL

NEW WALL

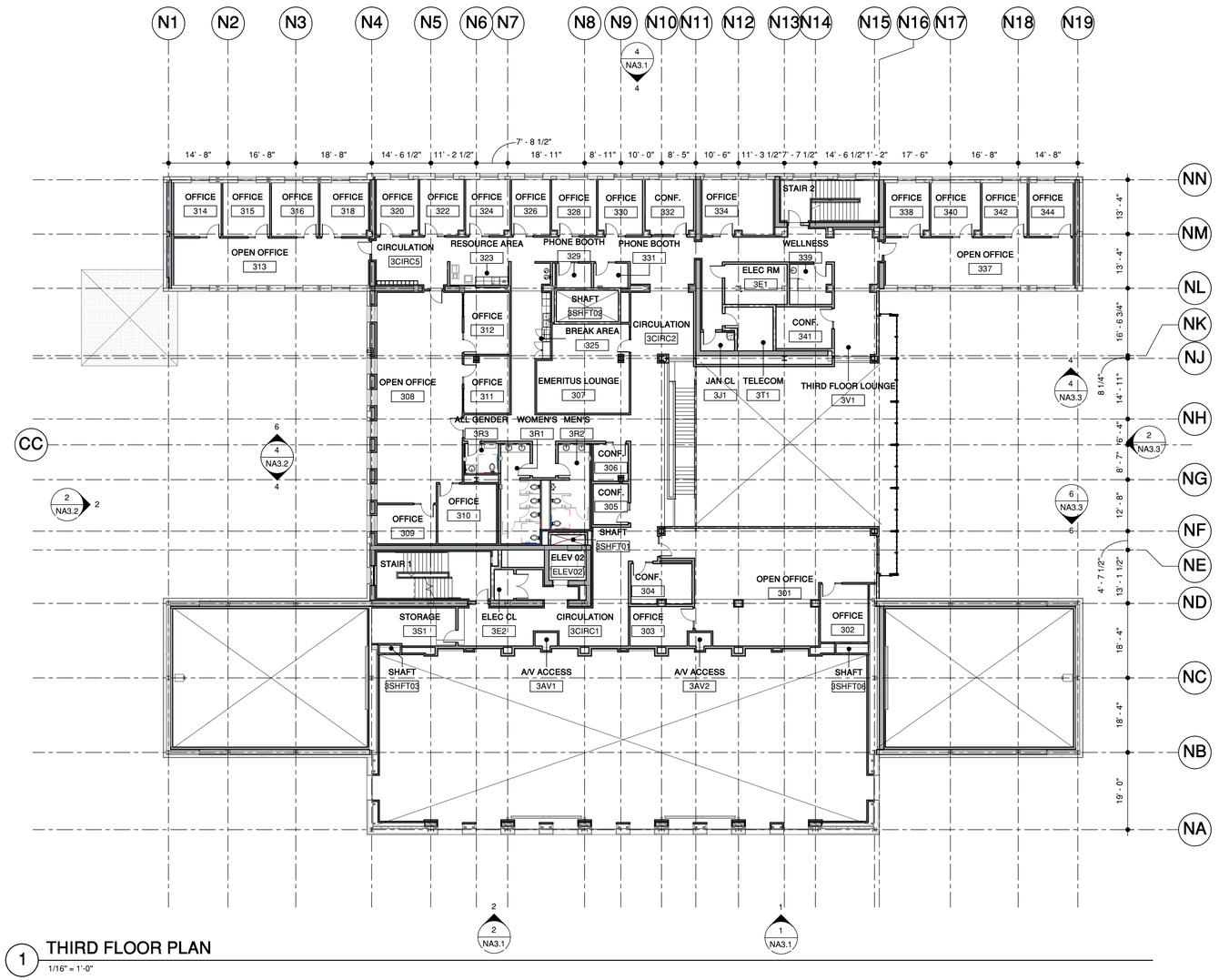

1 THIRD FLOOR PLAN

1/16" = 1'-0"

CAW ARCHITECTS

455 LAMBERT AVENUE PALO ALTO, CA 94306

WWW.CAWARCHITECTS.COM • 650.328.1818 • FAX: 650.328.1888

COPYRIGHT 2007 BY CAW ARCHITECTS, INC.

WILLIAM RAWN ASSOCIATES | Architects, Inc.

10 Post Office Sq.
Suite 1010
Boston, MA 02109

STAMP

LICENSED ARCHITECT CHRISTOPHER SCOTT WAINEY C-22197 REN. 04-30-22 STATE OF CALIFORNIA

CONSULTANTS

MILESTONE	DATE
ASA SUBMISSION	12/07/2020
ASA RESUBMISSION	08/20/2021

PROJECT NAME

NORTH BUILDING

GRADUATE SCHOOL OF EDUCATION

485 LASUEN MALL

STANFORD, CA 94305

SHEET TITLE

NB THIRD FLOOR PLAN

PROJECT NO. 17013

DRAWN BY TK / AS

CHECKED BY MA

SHEET

NA1.3

8/19/2021 10:14:27 PM

GENERAL NOTES

1. ALL COLUMNS AND CONCRETE WALLS, BOTH EXISTING AND NEW, TO RECEIVE NEW FURRING, U.O.N.
2. COLUMNS AND BEAMS AROUND STAIRS, ELEVATORS, AND DUCT SHAFTS TO BE PROTECTED WITH 1-HOUR RATED SPRAY-APPLIED FIREPROOFING OR GYPSUM BOARD, TYPICAL.
3. LOOSE FURNITURE SHOWN FOR REFERENCE ONLY, N.I.C.
4. ALL FIRST FLOOR AND BASEMENT EXTERIOR DOORS TO BE KEY-CARD ACCESS DOORS

FLOOR PLAN LEGEND

EXISTING WALL

NEW WALL

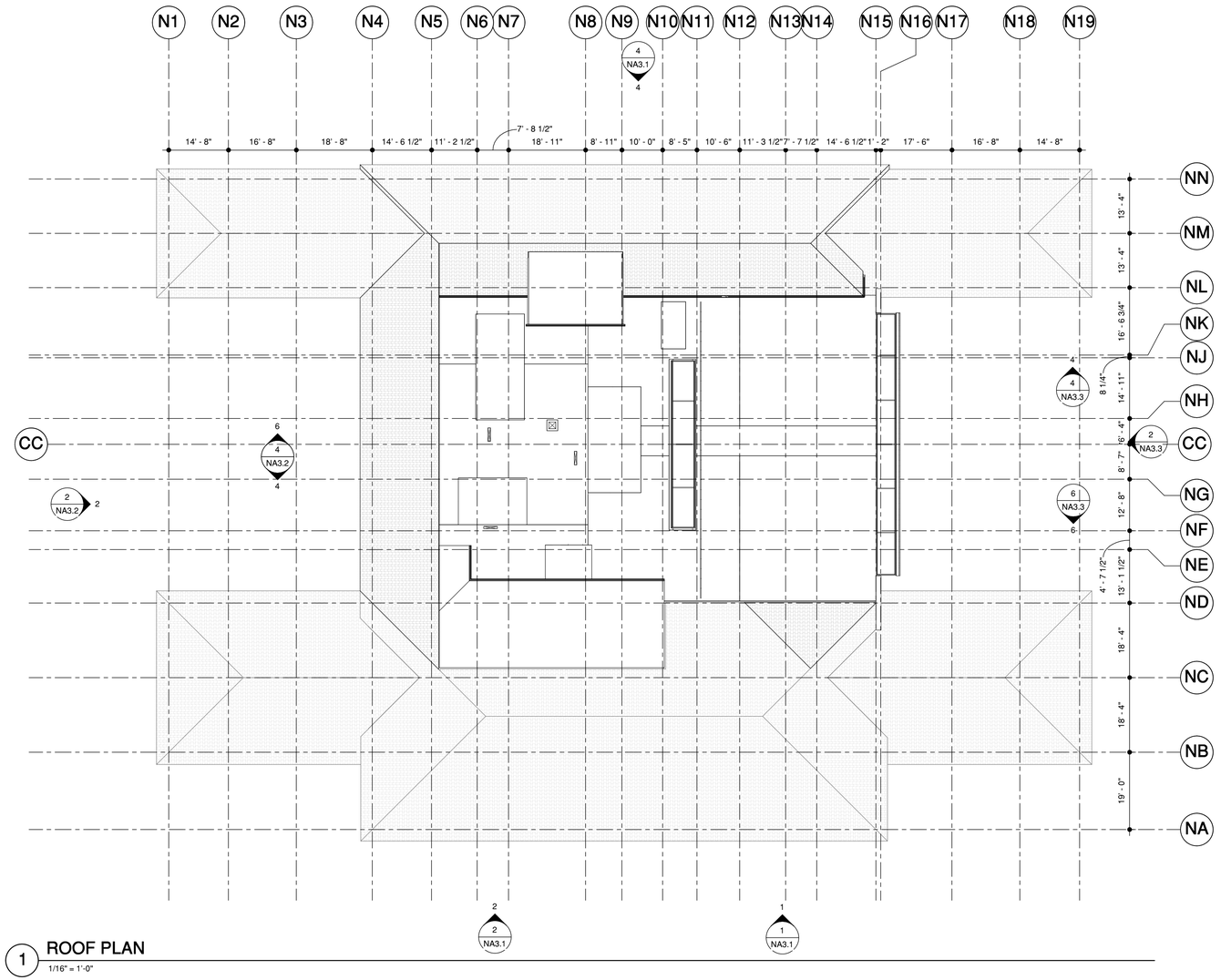

1 ROOF PLAN

1/16" = 1'-0"

TRUE NORTH N

CAW ARCHITECTS

455 LAMBERT AVENUE PALO ALTO, CA 94306
WWW.CAWARCHITECTS.COM • 650.328.1818 • FAX: 650.328.1888

COPYRIGHT 2017 BY CAW ARCHITECTS, INC.

WILLIAM RAWN ASSOCIATES | Architects, Inc.
10 Post Office Sq.
Suite 1010
Boston, MA 02109

STAMP

LICENSED ARCHITECT CHRISTOPHER SCOTT KWONG C 22197 REN. 08-31-2021 STATE OF CALIFORNIA

CONSULTANTS

MILESTONE	*DATE*
ASA SUBMISSION	12/07/2020
ASA RESUBMISSION	08/20/2021

PROJECT NAME

NORTH BUILDING
GRADUATE SCHOOL OF EDUCATION

485 LASUEN MALL
STANFORD, CA 94305

SHEET TITLE

NB ROOF PLAN

PROJECT NO. 17013
DRAWN BY TK / AS
CHECKED BY MA

SHEET

NA1.4

8/19/2021 10:14:31 PM

GENERAL NOTES

1. ALL COLUMNS TO BE ENCLOSED IN FURRED WALLS F3 U.O.N.
2. COLUMNS AND BEAMS AROUND STAIRS, ELEVATOR AND DUCT SHAFTS SHALL BE PROTECTED WITH 2-HOUR FIRE RATED SPRAY-APPLIED OR GYPSUM BOARD FIREPROOFING.
3. ALL FIRST FLOOR EXTERIOR DOORS TO BE KEY-CARD ACCESS DOORS.

FLOOR PLAN LEGEND

- NON-RATED WALL OR PARTITION
- RATED WALL
- CEMENT PLASTER WALL
- (E) WALL

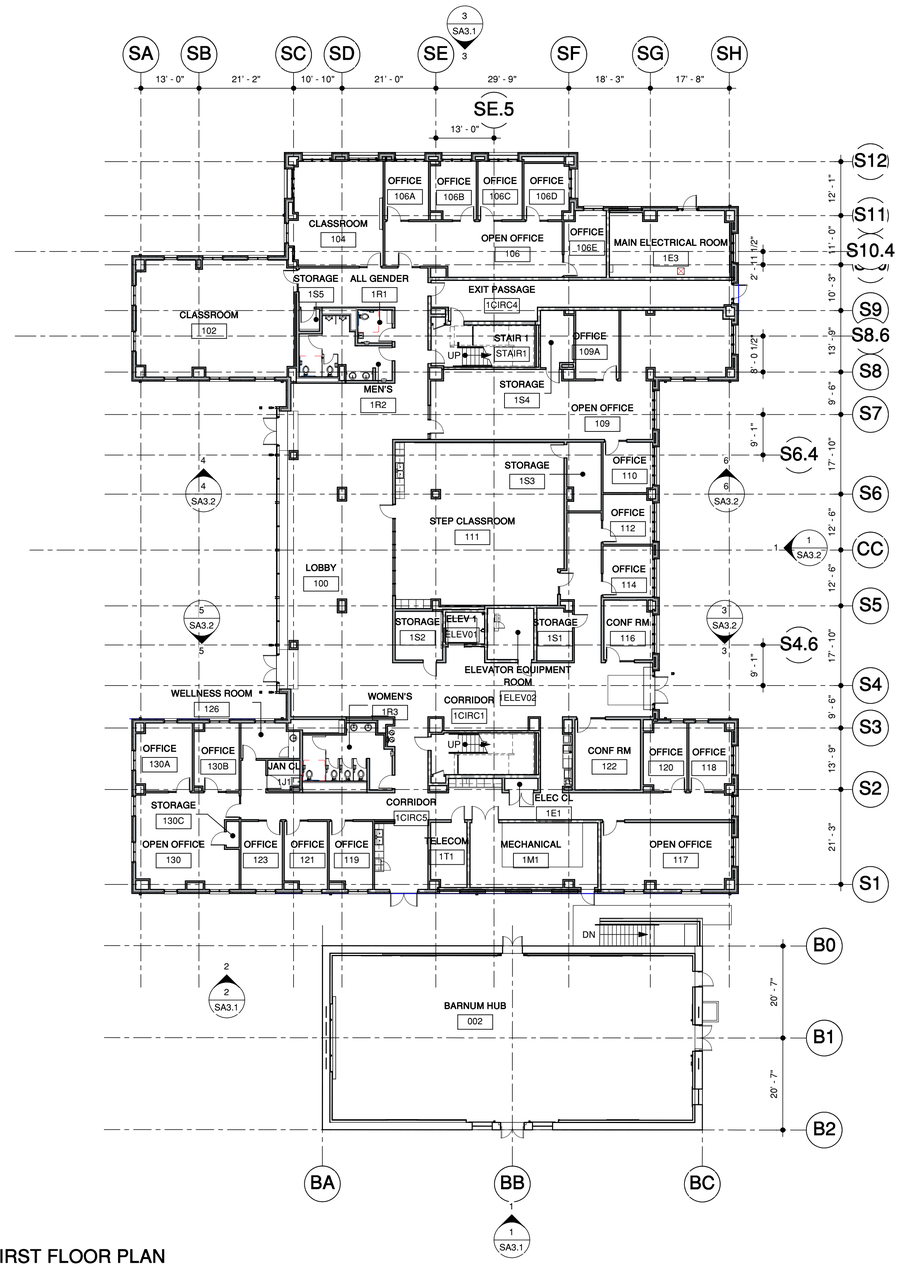

1 FIRST FLOOR PLAN

1/16" = 1'-0"

TRUE NORTH N

CAW ARCHITECTS

455 LAMBERT AVENUE PALO ALTO, CA 94306
WWW.CAWARCHITECTS.COM • 650.328.1818 • FAX: 650.328.1888

COPYRIGHT 2017 BY CAW ARCHITECTS, INC.

WILLIAM RAWN ASSOCIATES | Architects, Inc.
10 Post Office Sq.
Suite 1010
Boston, MA 02109

STAMP

LICENSED ARCHITECT CHRISTOPHER SCOTT KWONG C-22197 REN. 08-31-2021 STATE OF CALIFORNIA

CONSULTANTS

MILESTONE	DATE
ASA SUBMISSION	12/07/2020
ASA RESUBMISSION	08/20/2021

PROJECT NAME

SOUTH BUILDING
GRADUATE SCHOOL OF EDUCATION

505 & 507 LASUEN MALL
STANFORD, CA 94305

SHEET TITLE

SB FIRST FLOOR PLAN

PROJECT NO. 17013
DRAWN BY TK / AE
CHECKED BY MG / MA

SHEET

SA1.1

8/19/2021 9:14:55 PM

GENERAL NOTES

1. ALL COLUMNS TO BE ENCLOSED IN FURRED WALLS F3 U.O.N.
2. COLUMNS AND BEAMS AROUND STAIRS, ELEVATOR AND DUCT SHAFTS SHALL BE PROTECTED WITH 2-HOUR FIRE RATED SPRAY-APPLIED OR GYPSUM BOARD FIREPROOFING.
3. ALL FIRST FLOOR EXTERIOR DOORS TO BE KEY-CARD ACCESS DOORS.

FLOOR PLAN LEGEND

- NON-RATED WALL OR PARTITION
- RATED WALL
- CEMENT PLASTER WALL
- (E) WALL

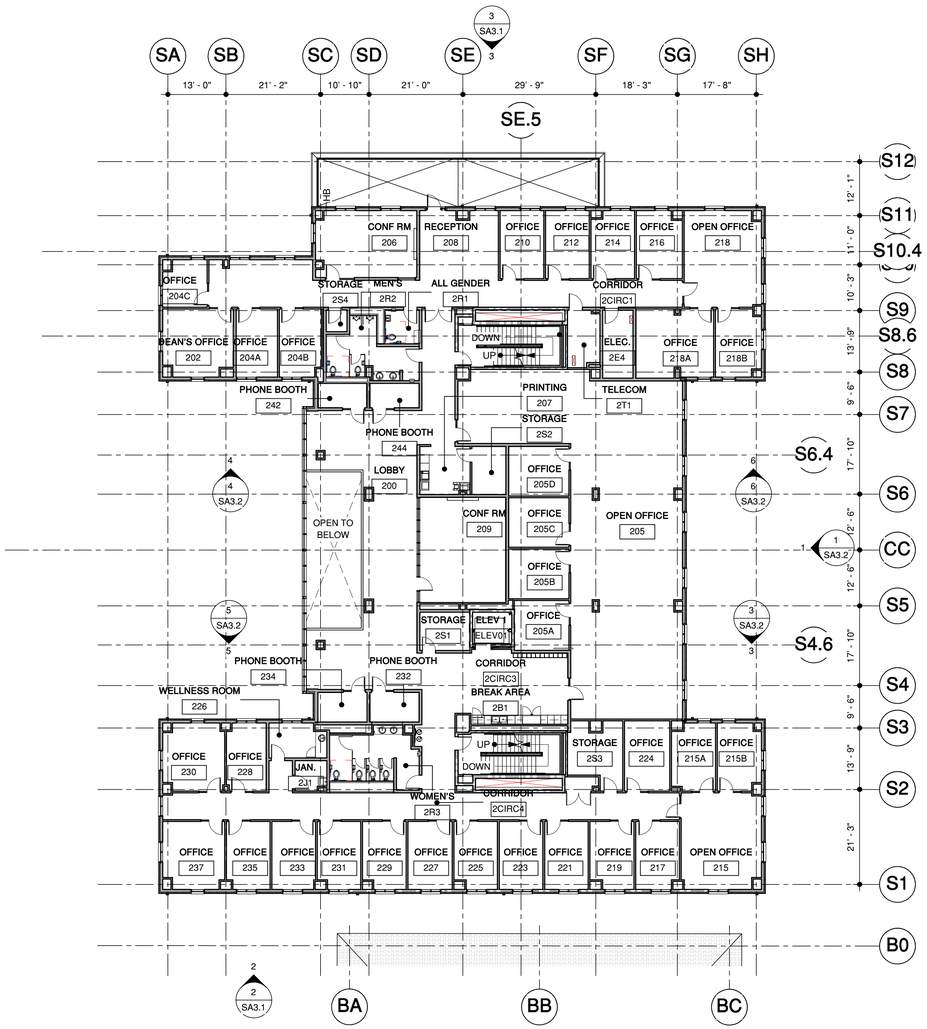

1 SECOND FLOOR PLAN
1/16" = 1'-0"

TRUE NORTH
N

CAW ARCHITECTS
455 LAMBERT AVENUE PALO ALTO, CA 94306
WWW.CAWARCHITECTS.COM • 650.328.1818 • FAX: 650.328.1888

COPYRIGHT 2007 BY CAW ARCHITECTS, INC.

WILLIAM RAWN ASSOCIATES | Architects, Inc.
10 Post Office Sq.
Suite 1010
Boston, MA 02109

STAMP

LICENSED ARCHITECT
CHRISTOPHER SCOTT WAINEY
C-22197
REN. 04-30-12
STATE OF CALIFORNIA

CONSULTANTS

MILESTONE	DATE
ASA SUBMISSION	12/07/2020
ASA RESUBMISSION	08/20/2021

PROJECT NAME

SOUTH BUILDING

GRADUATE SCHOOL OF EDUCATION

505 & 507 LASUEN MALL

STANFORD, CA 94305

SHEET TITLE

SB SECOND FLOOR PLAN

PROJECT NO. 17013
DRAWN BY TK / AE
CHECKED BY MG / MA

SHEET

SA1.2

8/19/2021 9:14:59 PM

GENERAL NOTES

1. ALL COLUMNS TO BE ENCLOSED IN FURRED WALLS F3 U.O.N.
2. COLUMNS AND BEAMS AROUND STAIRS, ELEVATOR AND DUCT SHAFTS SHALL BE PROTECTED WITH 2-HOUR FIRE RATED SPRAY-APPLIED OR GYPSUM BOARD FIREPROOFING.
3. ALL FIRST FLOOR EXTERIOR DOORS TO BE KEY-CARD ACCESS DOORS.

FLOOR PLAN LEGEND

- NON-RATED WALL OR PARTITION
- RATED WALL
- CEMENT PLASTER WALL
- (E) WALL

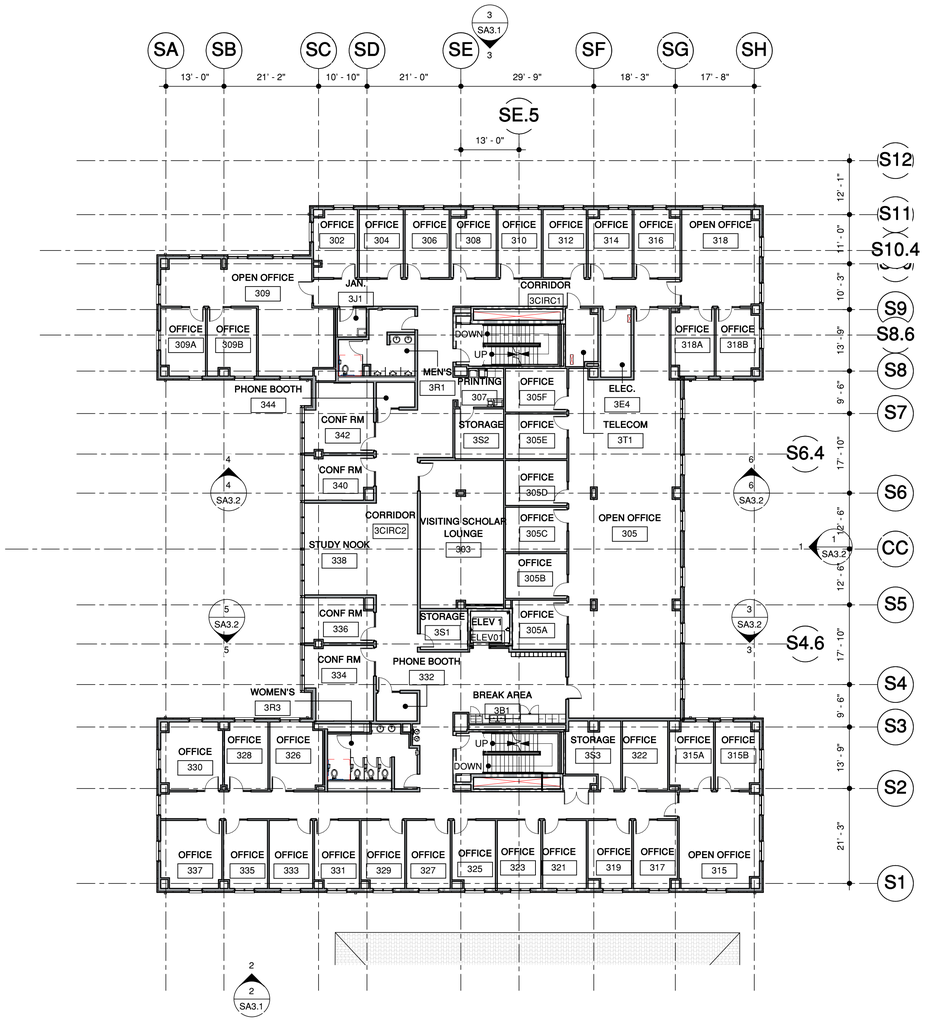

1 THIRD FLOOR PLAN
1/16" = 1'-0"

TRUE NORTH
N

CAW ARCHITECTS
455 LAMBERT AVENUE PALO ALTO, CA 94306
WWW.CAWARCHITECTS.COM • 650.328.1818 • FAX: 650.328.1888

COPYRIGHT 2007 BY CAW ARCHITECTS, INC.

WILLIAM RAWN ASSOCIATES | Architects, Inc.
10 Post Office Sq.
Suite 1010
Boston, MA 02109

STAMP

LICENSED ARCHITECT
CHRISTOPHER SCOTT WAINEY
C-22197
REN. 04-30-12
STATE OF CALIFORNIA

CONSULTANTS

MILESTONE	DATE
ASA SUBMISSION	12/07/2020
ASA RESUBMISSION	08/20/2021

PROJECT NAME

SOUTH BUILDING

GRADUATE SCHOOL OF EDUCATION

505 & 507 LASUEN MALL

STANFORD, CA 94305

SHEET TITLE

SB THIRD FLOOR PLAN

PROJECT NO. 17013
DRAWN BY TK / AE
CHECKED BY MG / MA

SHEET

SA1.3

8/19/2021 9:15:02 PM

GENERAL NOTES

1. ALL COLUMNS TO BE ENCLOSED IN FURRED WALLS F3 U.O.N.
2. COLUMNS AND BEAMS AROUND STAIRS, ELEVATOR AND DUCT SHAFTS SHALL BE PROTECTED WITH 2-HOUR FIRE RATED SPRAY-APPLIED OR GYPSUM BOARD FIREPROOFING.
3. ALL FIRST FLOOR EXTERIOR DOORS TO BE KEY-CARD ACCESS DOORS.

FLOOR PLAN LEGEND

- NON-RATED WALL OR PARTITION
- RATED WALL
- CEMENT PLASTER WALL
- (E) WALL

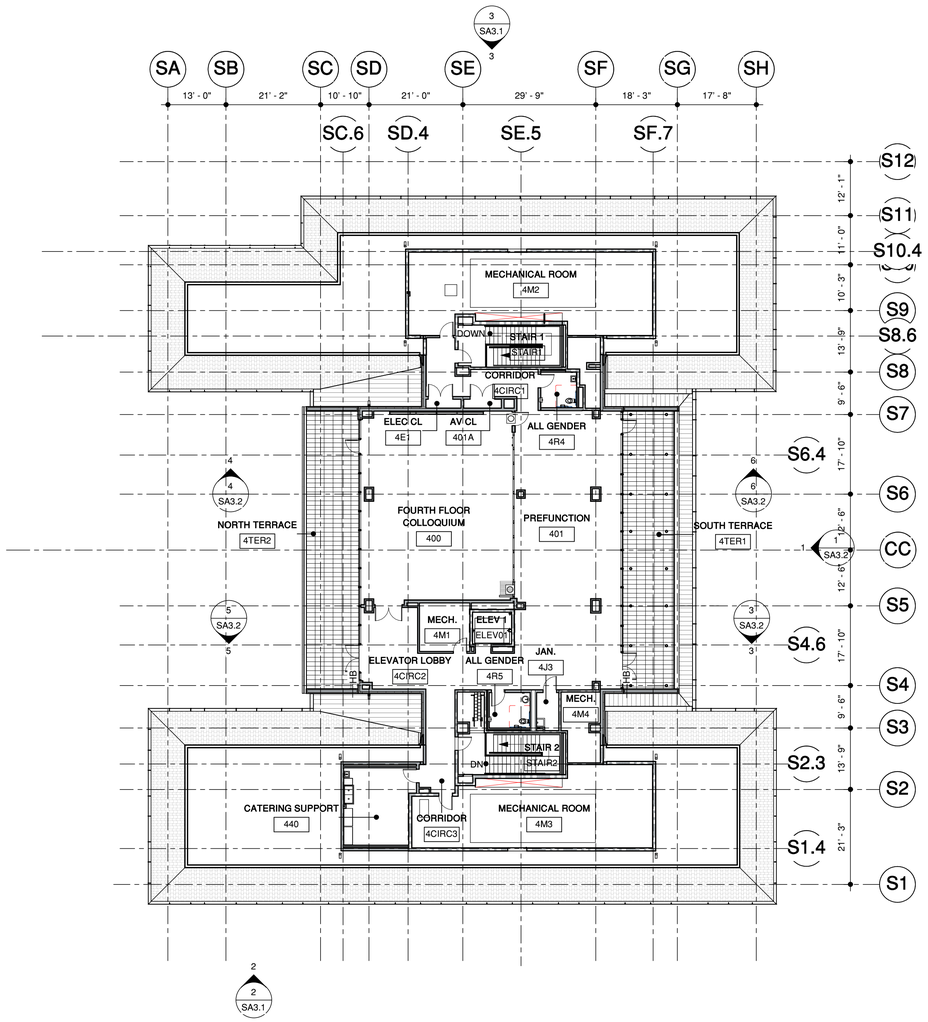

1 FOURTH FLOOR PLAN
1/16" = 1'-0"

TRUE NORTH
N

CAW ARCHITECTS
455 LAMBERT AVENUE PALO ALTO, CA 94306
WWW.CAWARCHITECTS.COM • 650.328.1818 • FAX: 650.328.1888

COPYRIGHT 2007 BY CAW ARCHITECTS, INC.

WILLIAM RAWN ASSOCIATES | Architects, Inc.
10 Post Office Sq.
Suite 1010
Boston, MA 02109

STAMP

LICENSED ARCHITECT
CHRISTOPHER SCOTT WAINEY
C-22197
REN. 04-30-22
STATE OF CALIFORNIA

CONSULTANTS

MILESTONE	DATE
ASA SUBMISSION	12/07/2020
ASA RESUBMISSION	08/20/2021

PROJECT NAME

SOUTH BUILDING

GRADUATE SCHOOL OF EDUCATION

505 & 507 LASUEN MALL

STANFORD, CA 94305

SHEET TITLE

SB FOURTH FLOOR PLAN

PROJECT NO. 17013
DRAWN BY TK / AE
CHECKED BY MG / MA

SHEET

SA1.4

8/19/2021 9:15:06 PM

GENERAL NOTES

1. ALL COLUMNS TO BE ENCLOSED IN FURRED WALLS F3 U.O.N.
2. COLUMNS AND BEAMS AROUND STAIRS, ELEVATOR AND DUCT SHAFTS SHALL BE PROTECTED WITH 2-HOUR FIRE RATED SPRAY-APPLIED OR GYPSUM BOARD FIREPROOFING.
3. ALL FIRST FLOOR EXTERIOR DOORS TO BE KEY-CARD ACCESS DOORS.

FLOOR PLAN LEGEND

- NON-RATED WALL OR PARTITION
- RATED WALL
- CEMENT PLASTER WALL
- (E) WALL

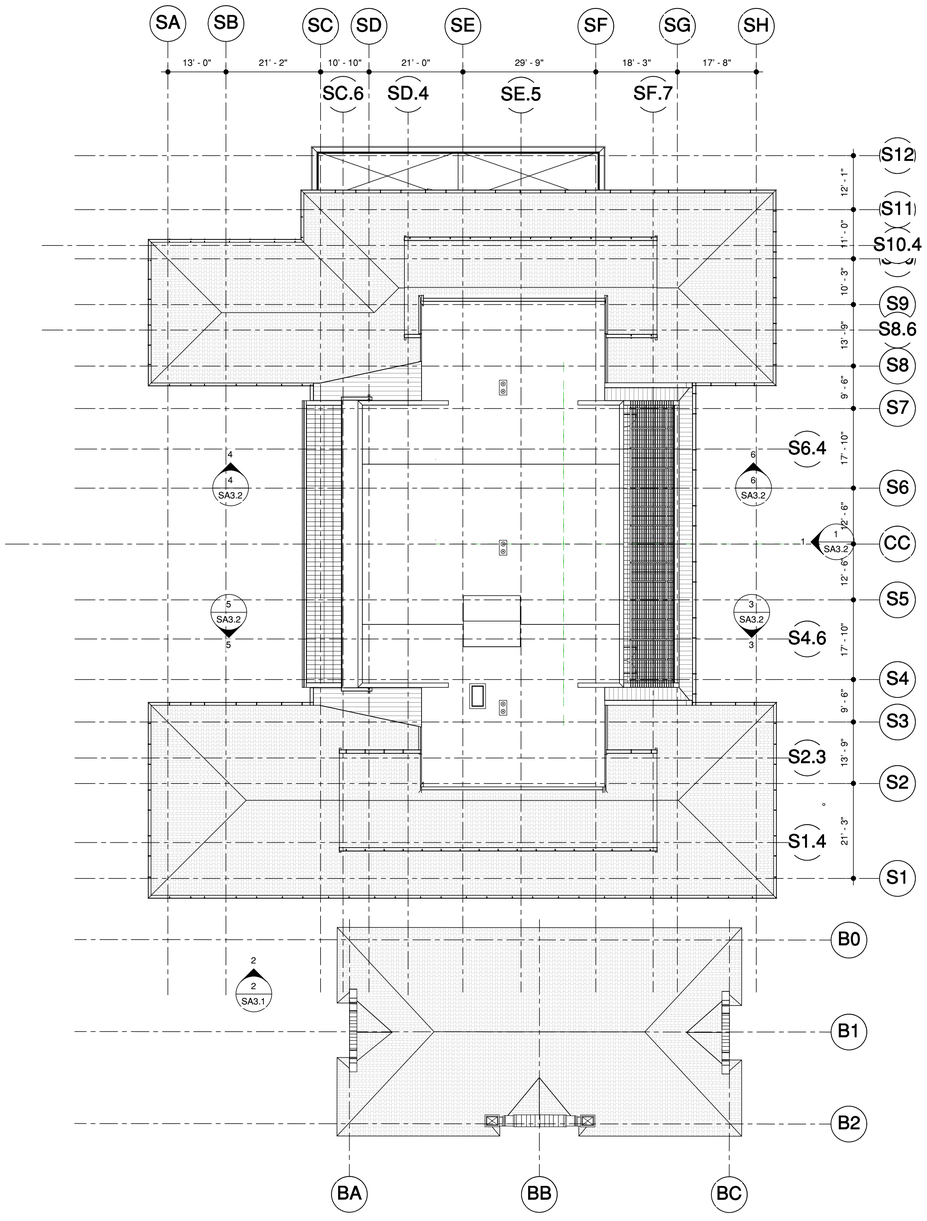

1 ROOF PLAN
1/16" = 1'-0"

TRUE NORTH
N

CAW ARCHITECTS
455 LAMBERT AVENUE PALO ALTO, CA 94306
WWW.CAWARCHITECTS.COM • 650.328.1818 • FAX: 650.328.1888

COPYRIGHT 2007 BY CAW ARCHITECTS, INC.

WILLIAM RAWN ASSOCIATES | Architects, Inc.
10 Post Office Sq.
Suite 1010
Boston, MA 02109

STAMP

LICENSED ARCHITECT
CHRISTOPHER SCOTT WAINEY
C-22197
REN. 04-30-12
STATE OF CALIFORNIA

CONSULTANTS

MILESTONE	DATE
ASA SUBMISSION	12/07/2020
ASA RESUBMISSION	08/20/2021

PROJECT NAME

SOUTH BUILDING

GRADUATE SCHOOL OF EDUCATION

505 & 507 LASUEN MALL

STANFORD, CA 94305

SHEET TITLE

SB ROOF PLAN

PROJECT NO. 17013
DRAWN BY TK / AE
CHECKED BY MG / MA

SHEET

SA1.5

8/19/2021 9:15:09 PM



2 LASUEN MALL WEST PROPOSED ELEVATION

1" = 60'-0"



1 LASUEN MALL WEST EXISTING ELEVATION

1" = 60'-0"

CAW ARCHITECTS

455 LAMBERT AVENUE PALO ALTO, CA 94306
WWW.CAWARCHITECTS.COM • 650.328.1818 • FAX: 650.328.1888

COPYRIGHT 2017 BY CAW ARCHITECTS, INC.

WILLIAM RAWN ASSOCIATES | Architects, Inc.
10 Post Office Sq.
Suite 1010
Boston, MA 02109

STAMP

LICENSED ARCHITECT
CHRISTOPHER SCOTT WAINEY
C-22197
REN. 04-30-22
STATE OF CALIFORNIA

CONSULTANTS

MILESTONE	DATE
ASA SUBMISSION	12/07/2020
ASA RESUBMISSION	08/20/2021

PROJECT NAME

GRADUATE SCHOOL OF EDUCATION

485 LASUEN MALL

STANFORD, CA 94305

SHEET TITLE

STREET SECTIONS

PROJECT NO. 17013
DRAWN BY TK / AS
CHECKED BY MA

SHEET

AA2.0

8/20/2021 9:26:14 AM

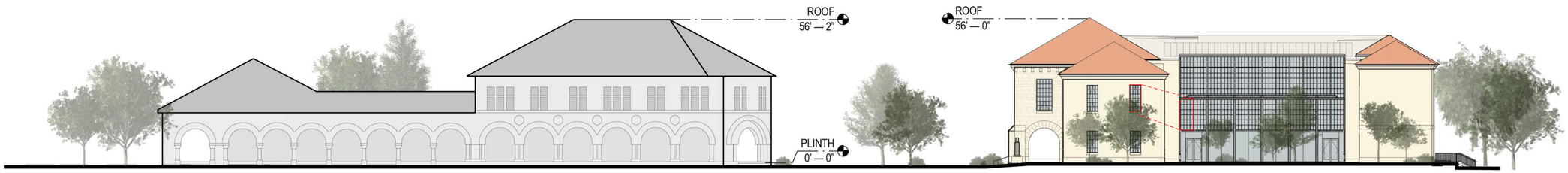

4 SOUTH ELEVATION
1" = 20'-0"

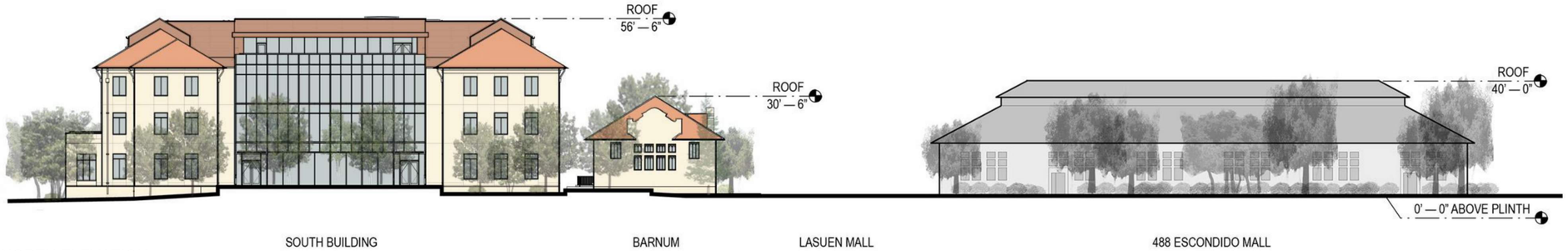

3 NORTH ELEVATION
1" = 20'-0"



2 WEST ELEVATION
1" = 20'-0"



1 EAST ELEVATION
1" = 20'-0"

CAW ARCHITECTS
455 LAMBERT AVENUE PALO ALTO, CA 94306
WWW.CAWARCHITECTS.COM • 650.328.1818 • FAX: 650.328.1888

COPYRIGHT 2007 BY CAW ARCHITECTS, INC.

WILLIAM RAWN ASSOCIATES | Architects, Inc.
10 Post Office Sq.
Suite 1010
Boston, MA 02109

STAMP

LICENSED ARCHITECT
CHRISTOPHER SCOTT WAINEY
C-22197
REN. 04-30-2012
STATE OF CALIFORNIA

CONSULTANTS

MILESTONE	DATE
ASA SUBMISSION	12/07/2020
ASA RESUBMISSION	08/20/2021

PROJECT NAME

GRADUATE SCHOOL OF EDUCATION

485 LASUEN MALL

STANFORD, CA 94305

SHEET TITLE

SITE ELEVATIONS

PROJECT NO. 17013
DRAWN BY TK / AS
CHECKED BY MA

SHEET

AA2.1

8/19/2021 10:12:56 PM

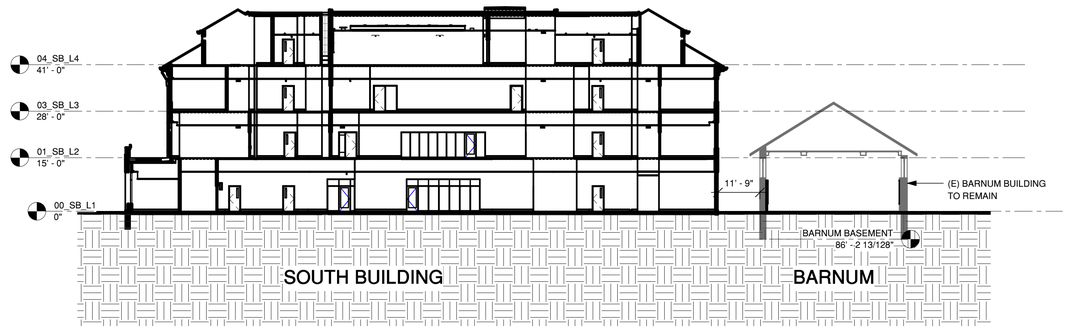

3 SITE SECTION THROUGH SOUTH BUILDING AND BARNUM
1" = 20'-0"

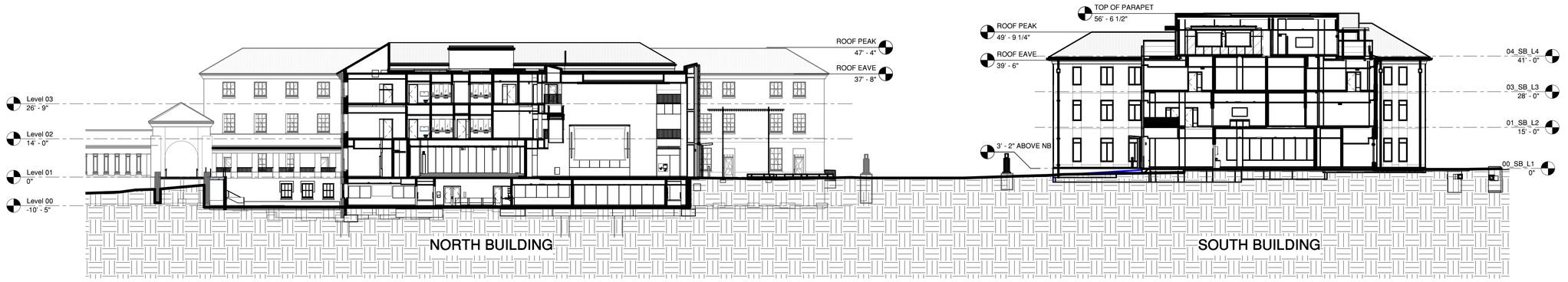

2 SITE SECTION THROUGH COURTYARD
1" = 20'-0"

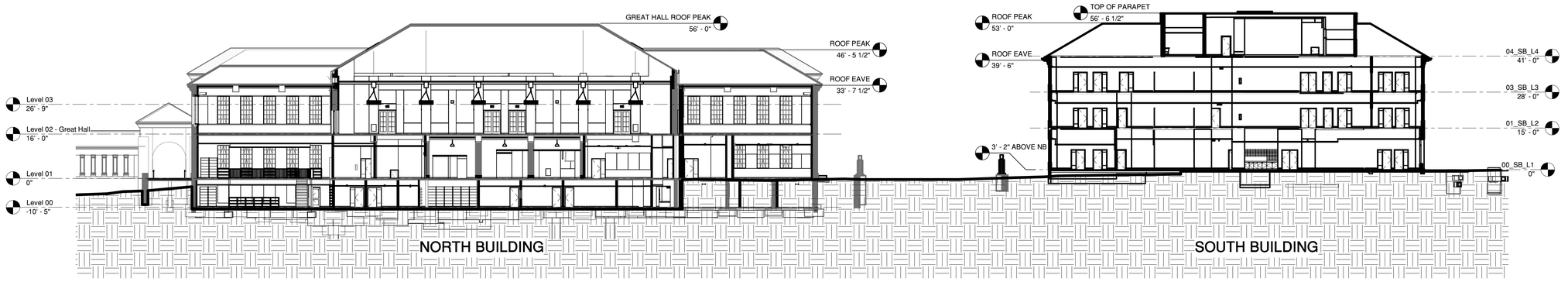

1 SITE SECTION
1" = 20'-0"

CAW ARCHITECTS
455 LAMBERT AVENUE PALO ALTO, CA 94306
WWW.CAWARCHITECTS.COM • 650.328.1818 • FAX: 650.328.1888

COPYRIGHT 2007 BY CAW ARCHITECTS, INC.

WILLIAM RAWN ASSOCIATES | Architects, Inc.
10 Post Office Sq.
Suite 1010
Boston, MA 02109

STAMP

LICENSED ARCHITECT
CHRISTOPHER SCOTT WAINEY
C-22197
REN. 04-30-12
STATE OF CALIFORNIA

CONSULTANTS

MILESTONE	DATE
ASA SUBMISSION	12/07/2020
ASA RESUBMISSION	08/20/2021

PROJECT NAME

GRADUATE SCHOOL OF EDUCATION

485 LASUEN MALL

STANFORD, CA 94305

SHEET TITLE

SITE SECTIONS

PROJECT NO. 17013
DRAWN BY TK / AS
CHECKED BY MA

SHEET

AA2.2

8/19/2021 10:13:09 PM



1. ALONG LASUEN MALL



2. VIEW FROM MEYER GREEN



3. VIEW FROM TOWN CENTER

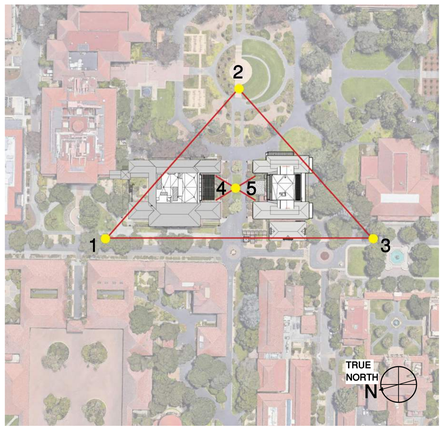



4. NORTH BUILDING COURTYARD



5. SOUTH BUILDING COURTYARD

CAW ARCHITECTS

455 LAMBERT AVENUE PALO ALTO, CA 94306
WWW.CAWARCHITECTS.COM • 650.328.1818 • FAX: 650.328.1888

COPYRIGHT 2007 BY CAW ARCHITECTS, INC.

WILLIAM RAWN ASSOCIATES | Architects, Inc.
10 Post Office Sq.
Suite 1010
Boston, MA 02109

STAMP

LICENSED ARCHITECT
CHRISTOPHER SCOTT WAINEY
C-22197
REN. 04-30-12
STATE OF CALIFORNIA

CONSULTANTS

MILESTONE	DATE
ASA SUBMISSION	12/07/2020
ASA RESUBMISSION	08/20/2021

PROJECT NAME

GRADUATE SCHOOL OF EDUCATION

485 LASUEN MALL

STANFORD, CA 94305

SHEET TITLE

EXTERIOR RENDERS

PROJECT NO. 17013
DRAWN BY TK / AS
CHECKED BY MA

SHEET

AA2.3

8/19/2021 10:13:11 PM

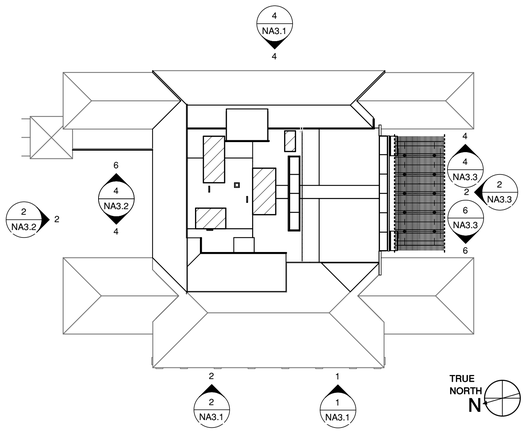



EXTERIOR FINISH LEGEND

- (E) CEMENT PLASTER
- CEMENT PLASTER
- CLAY TILE ROOF
- STONE

GLAZING LEGEND

- VISION GLASS
- SPANDREL GLASS
- FROSTED GLASS

KEYNOTES

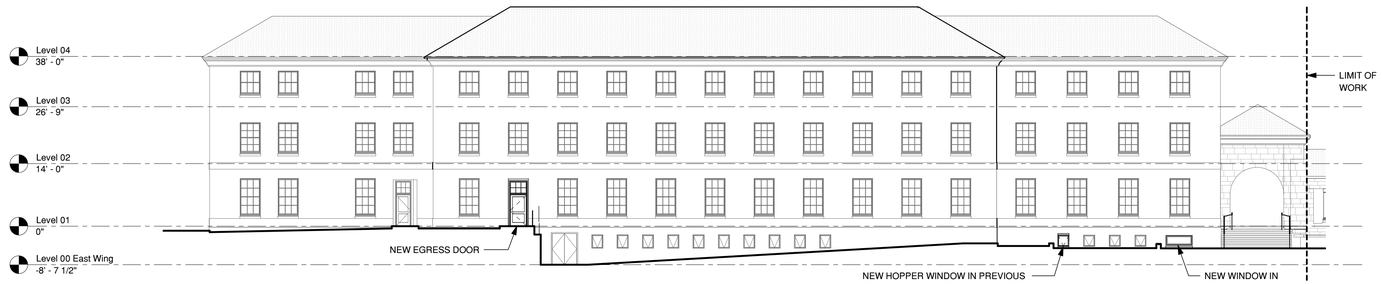

4 PROPOSED EXTERIOR ELEVATION - EAST

1/16" = 1'-0"

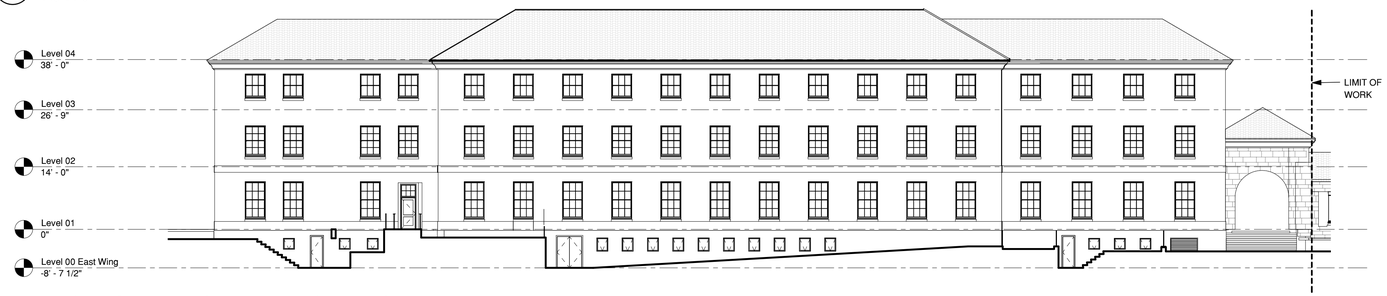

3 EXISTING EXTERIOR ELEVATION - EAST

1/16" = 1'-0"

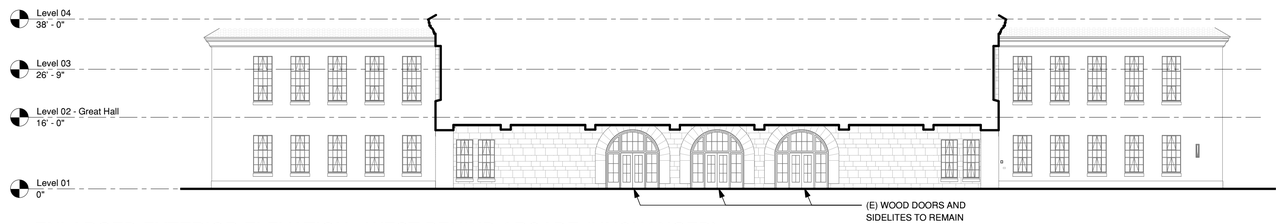

2 ENLARGED EXTERIOR ELEVATION - WEST BEHIND ARCADE (UNCHANGED)

1/16" = 1'-0"

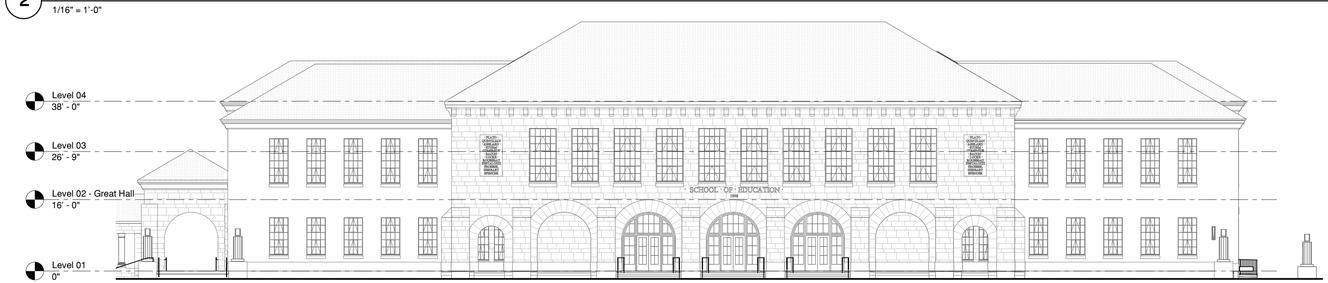

1 EXTERIOR ELEVATION - WEST (UNCHANGED)

1/16" = 1'-0"

CAW ARCHITECTS

455 LAMBERT AVENUE PALO ALTO, CA 94306
WWW.CAWARCHITECTS.COM • 650.328.1818 • FAX: 650.328.1888

COPYRIGHT 2017 BY CAW ARCHITECTS, INC.

WILLIAM RAWN ASSOCIATES | Architects, Inc.
10 Post Office Sq.
Suite 1010
Boston, MA 02109

STAMP

LICENSED ARCHITECT
CHRISTOPHER SCOTT WAINEY
C-22197
REN. 04-30-22
STATE OF CALIFORNIA

CONSULTANTS

MILESTONE	DATE
ASA SUBMISSION	12/07/2020
ASA RESUBMISSION	08/20/2021

PROJECT NAME

NORTH BUILDING

GRADUATE SCHOOL OF EDUCATION

485 LASUEN MALL

STANFORD, CA 94305

SHEET TITLE

NB EAST & WEST ELEVATIONS

PROJECT NO. 17013

DRAWN BY TK / AS

CHECKED BY MA

SHEET

NA3.1

8/20/2021 9:23:07 AM

EXTERIOR FINISH LEGEND

- (E) CEMENT PLASTER
- CEMENT PLASTER
- CLAY TILE ROOF
- STONE

GLAZING LEGEND

- VISION GLASS
- SPANDREL GLASS
- FROSTED GLASS

KEYNOTES

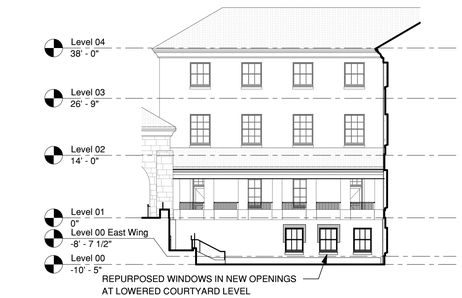

6 PROPOSED EXT. ELEV. - WEST COURTYARD
1/16" = 1'-0"

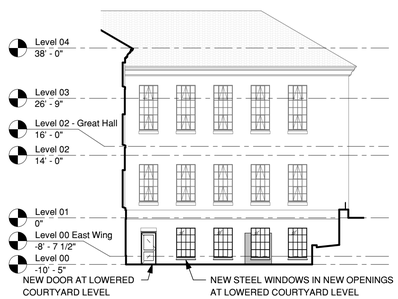

4 PROPOSED EXT. ELEV. - EAST COURTYARD
1/16" = 1'-0"

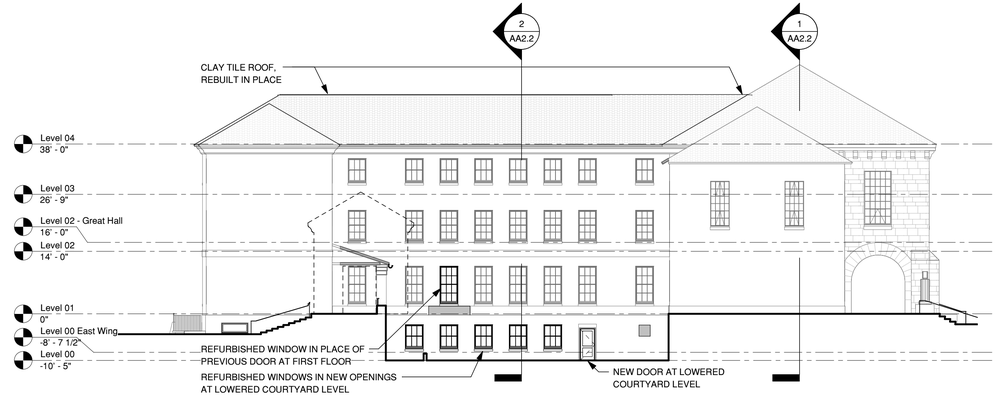

2 PROPOSED EXTERIOR ELEVATION - NORTH
1/16" = 1'-0"



5 EXISTING EXT. ELEV. - WEST COURTYARD
1/16" = 1'-0"

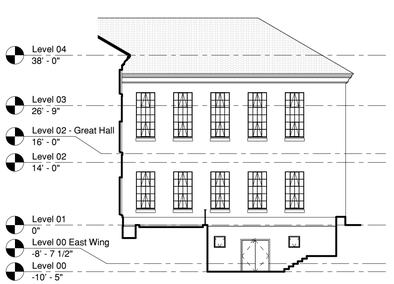

3 EXISTING EXT. ELEV. - EAST COURTYARD
1/16" = 1'-0"



1 EXISTING EXTERIOR ELEVATION - NORTH
1/16" = 1'-0"

CAW ARCHITECTS
455 LAMBERT AVENUE PALO ALTO, CA 94306
WWW.CAWARCHITECTS.COM • 650.328.1818 • FAX: 650.328.1888

COPYRIGHT 2007 BY CAW ARCHITECTS, INC.

WILLIAM RAWN ASSOCIATES | Architects, Inc.
10 Post Office Sq.
Suite 1010
Boston, MA 02109

STAMP



CONSULTANTS

MILESTONE	DATE
ASA SUBMISSION	12/07/2020
ASA RESUBMISSION	08/20/2021

PROJECT NAME

NORTH BUILDING

GRADUATE SCHOOL OF EDUCATION

485 LASUEN MALL

STANFORD, CA 94305

SHEET TITLE

NB NORTH AND NORTHERN COURTYARD ELEVATIONS

PROJECT NO. 17013

DRAWN BY TK / AS

CHECKED BY MA

SHEET

NA3.2

8/19/2021 10:14:41 PM

EXTERIOR FINISH LEGEND

- (E) CEMENT PLASTER
- CEMENT PLASTER
- CLAY TILE ROOF
- STONE

GLAZING LEGEND

- VISION GLASS
- SPANDREL GLASS
- FROSTED GLASS

KEYNOTES

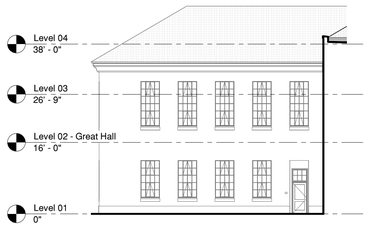

6 EXTERIOR ELEVATION - EAST COURTYARD
1/16" = 1'-0"



4 EXTERIOR ELEVATION - WEST COURTYARD
1/16" = 1'-0"

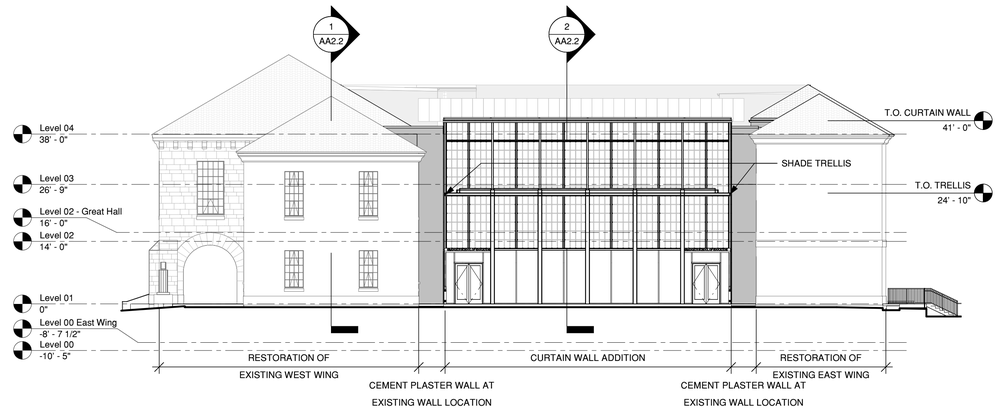

2 PROPOSED EXTERIOR ELEVATION - SOUTH
1/16" = 1'-0"

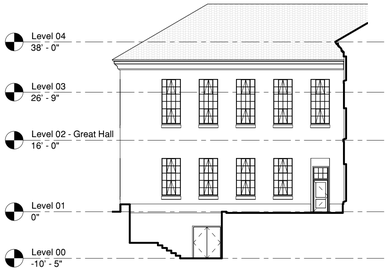

5 EXTERIOR ELEVATION - EAST COURTYARD
1/16" = 1'-0"



3 EXTERIOR ELEVATION - WEST COURTYARD
1/16" = 1'-0"



1 EXISTING EXTERIOR ELEVATION - SOUTH
1/16" = 1'-0"

CAW ARCHITECTS
455 LAMBERT AVENUE PALO ALTO, CA 94306
WWW.CAWARCHITECTS.COM • 650.328.1818 • FAX: 650.328.1888

COPYRIGHT 2007 BY CAW ARCHITECTS, INC.

WILLIAM RAWN ASSOCIATES | Architects, Inc.
10 Post Office Sq.
Suite 1010
Boston, MA 02109

STAMP

LICENSED ARCHITECT
CHRISTOPHER SCOTT WAINEY
C-22197
REN. 04-30-22
STATE OF CALIFORNIA

CONSULTANTS

MILESTONE	DATE
ASA SUBMISSION	12/07/2020
ASA RESUBMISSION	08/20/2021

PROJECT NAME

NORTH BUILDING

GRADUATE SCHOOL OF EDUCATION

485 LASUEN MALL

STANFORD, CA 94305

SHEET TITLE

NB SOUTH AND SOUTHERN COURTYARD ELEVATIONS

PROJECT NO. 17013
DRAWN BY TK / AS
CHECKED BY MA

SHEET

NA3.3

8/19/2021 10:14:46 PM





ACCENT STUCCO
COLOR TO MATCH (E)
BARNUM SOFFIT



3 EXTERIOR ELEVATION - EAST
1/16" = 1'-0"



2 EXTERIOR ELEVATION - WEST
1/16" = 1'-0"



1 EXTERIOR ELEVATION - WEST - BARNUM
1/16" = 1'-0"

EXTERIOR FINISH LEGEND

- CEMENT PLASTER
- CEMENT PLASTER - ACCENT - KELLY MOORE 417 OXFORD BROWN
- METAL PANEL
- CLAY TILE ROOFING
- METAL OR ALUMINUM: TO MATCH PERMAFLUOR CLASSIC BRONZE
- FINISHED CONCRETE FOUNDATION WALL

GLAZING LEGEND

- VISION GLASS
- SPANDREL GLASS
- FROSTED GLASS

KEYNOTES

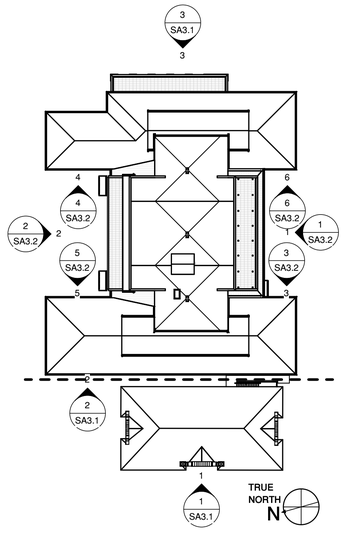

CAW ARCHITECTS
455 LAMBERT AVENUE PALO ALTO, CA 94306
WWW.CAWARCHITECTS.COM • 650.328.1818 • FAX: 650.328.1888

COPYRIGHT 2007 BY CAW ARCHITECTS, INC.

WILLIAM RAWN ASSOCIATES | Architects, Inc.
10 Post Office Sq.
Suite 1010
Boston, MA 02109

STAMP

LICENSED ARCHITECT
CHRISTOPHER SCOTT WAINEY
C-22197
REN. 04-30-12
STATE OF CALIFORNIA

CONSULTANTS

MILESTONE	DATE
ASA SUBMISSION	12/07/2020
ASA RESUBMISSION	08/20/2021

PROJECT NAME

SOUTH BUILDING

GRADUATE SCHOOL OF EDUCATION

505 & 507 LASUEN MALL

STANFORD, CA 94305

SHEET TITLE

SB EAST AND WEST ELEVATIONS

PROJECT NO. 17013
DRAWN BY TK / AE
CHECKED BY MG / MA

SHEET

SA3.1

8/20/2021 9:31:39 AM

EXTERIOR FINISH LEGEND

- CEMENT PLASTER
- CEMENT PLASTER - ACCENT - KELLY MOORE 417 OXFORD BROWN
- METAL PANEL
- CLAY TILE ROOFING
- METAL OR ALUMINUM: TO MATCH PERMAFLUOR CLASSIC BRONZE
- FINISHED CONCRETE FOUNDATION WALL

GLAZING LEGEND

- VISION GLASS
- SPANDREL GLASS
- FROSTED GLASS

KEYNOTES

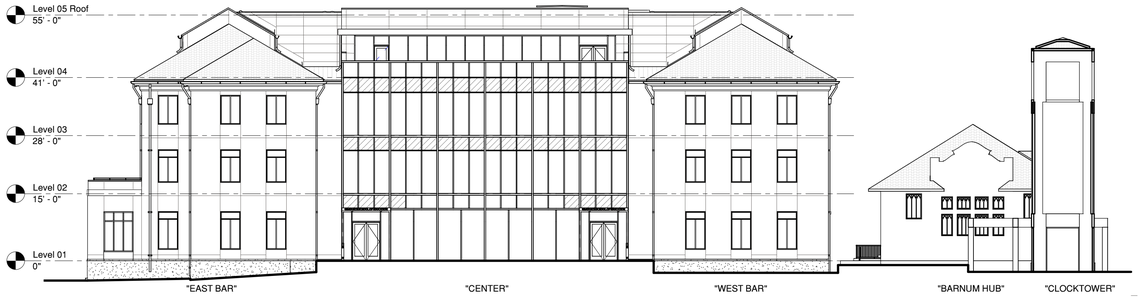

2 EXTERIOR ELEVATION - NORTH
1/16" = 1'-0"

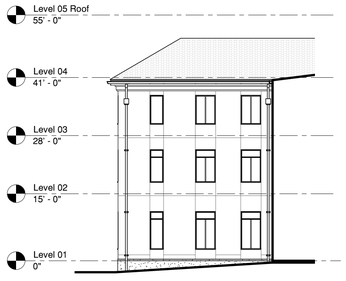

4 EXTERIOR ELEVATION - WEST
1/16" = 1'-0"

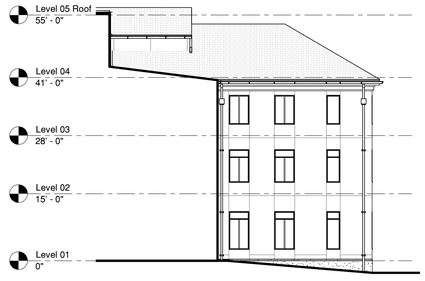

5 EXTERIOR ELEVATION - EAST
1/16" = 1'-0"



1 EXTERIOR ELEVATION - SOUTH
1/16" = 1'-0"

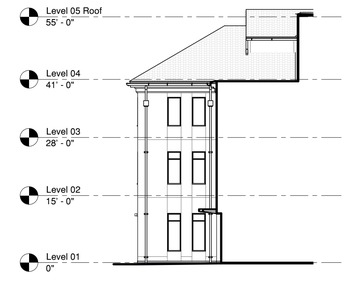

3 EXTERIOR ELEVATION - EAST
1/16" = 1'-0"

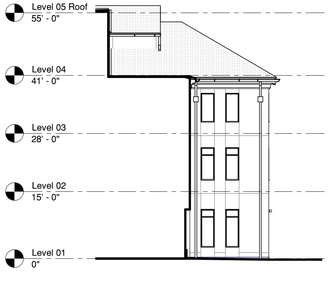

6 EXTERIOR ELEVATION - WEST
1/16" = 1'-0"

CAW ARCHITECTS
455 LAMBERT AVENUE PALO ALTO, CA 94306
WWW.CAWARCHITECTS.COM • 650.328.1818 • FAX: 650.328.1888

COPYRIGHT 2007 BY CAW ARCHITECTS, INC.

WILLIAM RAWN ASSOCIATES | Architects, Inc.
10 Post Office Sq.
Suite 1010
Boston, MA 02109

STAMP

LICENSED ARCHITECT
CHRISTOPHER SCOTT WAINEY
C-22197
REN. 04-30-22
STATE OF CALIFORNIA

CONSULTANTS

MILESTONE	DATE
ASA SUBMISSION	12/07/2020
ASA RESUBMISSION	08/20/2021

PROJECT NAME

SOUTH BUILDING

GRADUATE SCHOOL OF EDUCATION

505 & 507 LASUEN MALL

STANFORD, CA 94305

SHEET TITLE

SB NORTH AND SOUTH ELEVATIONS

PROJECT NO. 17013
DRAWN BY TK / AE
CHECKED BY MG / MA

SHEET

SA3.2

8/19/2021 9:15:21 PM