OCEGUERA RESIDENCE

13115 UVAS ROAD, MORGAN HILL

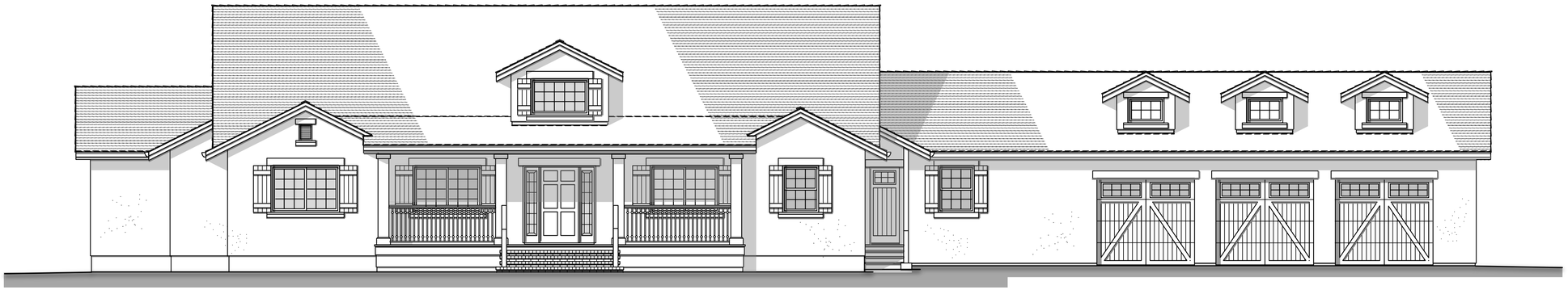

CONTACT INFORMATION:

PROPERTY OWNER / BUILDING DESIGNER:

ALEX & DEEDEE OCEGUERA
13115 UVAS ROAD
MORGAN HILL, CA 95037
ALEX: PHONE: (650) 400-2415
EMAIL: OCEGUERA.ALEX@GMAIL.COM
DEEDEE: PHONE: (650) 339-0747
EMAIL: DDOCEGUERA@GMAIL.COM

TOPOGRAPHICAL SURVEY:

MID COAST ENGINEERS
70 PENNY LANE, SUITE A
WATSONVILLE, CA 95076
(831) 724-2580

GEOTECHNICAL ENGINEER:

ROCK SOLID ENGINEERING, INC.
100 MAIN STREET, SUITE A
WATSONVILLE, CA 95076
(831) 724-5868
EMAIL: OFFICE@ROCKSOLIDENGINEERS.COM

CIVIL ENGINEER (GRADING AND DRAINAGE):

LEA & BRAZE ENGINEERING, INC.
2495 INDUSTRIAL PARKWAY WEST
HAYWARD, CA 94545
(510) 887-4086
EMAIL: JHALBOM@LEABRAZE.COM

STRUCTURAL ENGINEER:

SUNG ENGINEERING INC.
29300 KOHOUTEK WAY
UNION CITY, CA 94587
PHONE: (510) 475-7900
FAX: (510) 475-7913
EMAIL: PSUNG@SUNGENGR.COM

ENERGY COMPLIANCE:

NRG SOLUTIONS / 5 STAR ENERGY
155 NOVATO DRIVE
VACAVILLE, CA 95688
(530) 545-1138
EMAIL: NRGMICAH@GMAIL.COM

SHEET INDEX:

SHEET #	DESCRIPTION
COVER	VICINITY MAP, PROJECT DATA, SHEET INDEX, CODE COMPLIANCE, FLOOD NOTES, GENERAL NOTES
1/1	TOPOGRAPHICAL SURVEY MAP
C-1.1	TITLE SHEET (CIVIL ENGINEERING PLANS)
C-1.2	OVERALL SITE PLAN
C-2.0	GRADING AND DRAINAGE PLAN
C-2.1	GRADING AND DRAINAGE PLAN
C-2.2	GRADING AND DRAINAGE PLAN
C-2.3	GRADING AND DRAINAGE PLAN
C-2.4	GRADING AND DRAINAGE PLAN
C-3.0	UTILITY PLAN
C-3.1	UTILITY PLAN
C-3.2	UTILITY PLAN
C-3.3	UTILITY PLAN
C-3.4	UTILITY PLAN
C-4.0	HORIZONTAL CONTROL PLAN
C-4.1	SITE SECTIONS
C-5.0	DETAILS
C-5.1	DETAILS
C-5.2	COUNTY DETAILS
C-6.0	GRADING SPECIFICATONS
ER-1	EROSION CONTROL PLAN
BMP-1	EROSION CONTROL DETAILS
BMP-2	EROSION CONTROL DETAILS
A-1	FLOOR PLAN - OVERALL, AND FLOOR PLAN KEY
A-2	EXONS, GENERAL NOTES (CONTINUED)
A-3	EXONS, GENERAL NOTES (CONTINUED)
A-4	EXONS, GENERAL NOTES (CONTINUED)
A-5	EXONS, GENERAL NOTES (CONTINUED)
A-6	EXONS, GENERAL NOTES (CONTINUED)
A-7	EXONS, GENERAL NOTES (CONTINUED)
S1	FOUNDATION PLAN
S2	ROOF FRAMING PLAN
S3	FOUNDATION AND FRAMING DETAILS
S4	FOUNDATION AND FRAMING DETAILS
STD1	STRUCTURAL NOTES AND SPECIFICATIONS
STD2	STANDARD STRUCTURAL DETAILS
STD3	STANDARD STRUCTURAL DETAILS
T.1	ENERGY COMPLIANCE DOCUMENTATION
T.2	ENERGY COMPLIANCE DOCUMENTATION
T.3	ENERGY COMPLIANCE DOCUMENTATION
CG-1	CAL GREEN PROJECT REQUIREMENTS

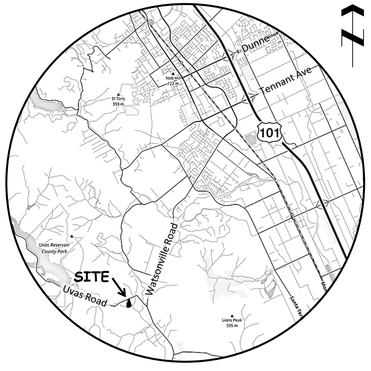

VICINITY MAP

REVISIONS	BY

THESE PLANS ARE PREPARED UNDER THE DIRECTION AND RESPONSIBILITY OF THE PROPERTY OWNERS; ALEX AND DEE DEE OCEGUERA AND SHALL NOT BE DUPLICATED OR REPRODUCED WITHOUT THEIR EXPRESS WRITTEN CONSENT

ALEX OCEGUERA / DEE DEE OCEGUERA
EMAIL: OCEGUERA.ALEX@GMAIL.COM / DDOCEGUERA@GMAIL.COM PHONE (650) 400-2415

NEW SINGLE FAMILY RESIDENCE:

OCEGUERA RESIDENCE

13115 UVAS ROAD
APN: 756-19-017 AND 756-19-021

MORGAN HILL, CALIFORNIA
SANTA CLARA COUNTY

Date	01/03/22
Scale	---
Job	---
Drawn	---

Sheet:
COVER
Of: --- Sheets

OCEGUERA RESIDENCE

13115 UVAS ROAD, MORGAN HILL

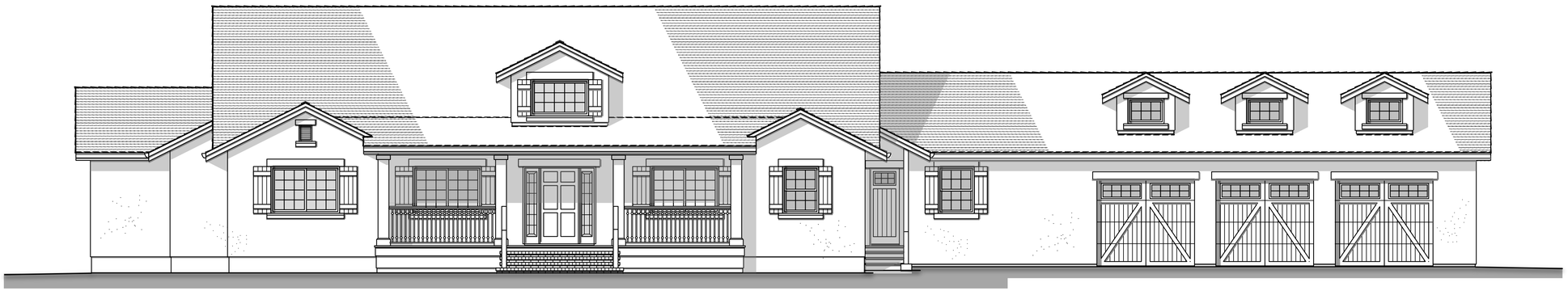

FLOOD ORDINANCE:

ALL CONSTRUCTION SHALL MEET THE REQUIREMENTS OF THE COUNTY OF SANTA CLARA ORDINANCE CODE, TITLE C, DIVISION C12, CHAPTER VII; FLOOD PLAIN MANAGEMENT, GENERAL APPLICABLE EXCERPTS AS FOLLOWS:

Sec. C12-816. Standards of construction.

In all special flood hazard areas the following standards are required:

(1) *Anchoring.* All new construction and substantial improvements of structures, including manufactured homes, shall be adequately anchored to prevent flotation, collapse or lateral movement of the structure resulting from hydrodynamic and hydrostatic loads, including the effects of buoyancy.

(2) *Construction materials and methods.* All new construction and substantial improvements of structures, including manufactured homes, shall be constructed:

a. With flood resistant materials, and utility equipment resistant to flood damage for areas below the base flood elevation;

b. Using methods and practices that minimize flood damage;

c. With electrical, heating, ventilation, plumbing and air conditioning equipment and other service facilities that are designed and/or located so as to prevent water from entering or accumulating within the components during conditions of flooding; and

d. Within Zones AH or AO, so that there are adequate drainage paths around structures on slopes to guide flood waters around and away from proposed structures.

(3) *Elevation and floodproofing.*

a. *Residential construction.* All new construction or substantial improvements of residential structures shall have the lowest floor, including basement:

1. In AE, AH, A1—30 Zones, elevated two feet above the base flood elevation.
2. In an AO zone, elevated above the highest adjacent grade to a height two feet above the depth number specified in feet on the FIRM, or elevated at least four feet above the highest adjacent grade if no depth number is specified.
3. In an A zone, without BFE's specified on the FIRM [unnumbered A zone], elevated two feet above the base flood elevation; as determined under Section C12-813(3).

Upon the completion of the structure, the elevation of the lowest floor, including basement, shall be certified by a registered civil engineer or licensed land surveyor, and verified by the community building inspector to be properly elevated. Such certification and verification shall be provided to the Floodplain Administrator

b. *Nonresidential construction* (*omitted - not applicable*).

c. *Flood openings.* All new construction and substantial improvements of structures with fully enclosed areas below the lowest floor (excluding basements) that are usable solely for parking of vehicles, building access or storage, and which are subject to flooding, shall be designed to automatically equalize hydrostatic flood forces on exterior walls by allowing for the entry and exit of floodwater. Designs for meeting this requirement must meet the following minimum criteria:

1. *For non-engineered openings:*
   - *i. Have a minimum of two openings on different sides having a total net area of not less than one square inch for every square foot of enclosed area subject to flooding;*
   - *ii. The bottom of all openings shall be no higher than one foot above grade;*
   - *iii. Openings may be equipped with screens, louvers, valves or other coverings or devices provided that they permit the automatic entry and exit of floodwater; and*
   - *iv. Buildings with more than one enclosed area must have openings on exterior walls for each area to allow flood water to directly enter; or*
2. *Be certified by a registered civil engineer or architect.*

d. *Manufactured homes. (omitted - not applicable).*

e. *Garages and low cost accessory structures.*

1. *Attached garages.*
   - *i. A garage attached to a residential structure, constructed with the garage floor slab below the BFE, must be designed to allow for the automatic entry of flood waters. See Section C12-816(3)c. Areas of the garage below the BFE must be constructed with flood resistant materials. See C12-816(2).*
   - *ii.* (*omitted - not applicable*).
2. *Detached garages and accessory structures* (*omitted*).

f. *Crawlspace construction.* This subsection applies to buildings with crawl spaces up to two feet below grade. Below-grade crawl space construction in accordance with the requirements listed below will not be considered basements.

1. The building must be designed and adequately anchored to resist flotation, collapse, and lateral movement of the structure resulting from hydrodynamic and hydrostatic loads, including the effects of buoyancy. Crawl space construction is not allowed in areas with flood velocities greater than five feet per second unless the design is reviewed by a qualified design professional, such as a registered architect or professional engineer;
2. The crawl space is an enclosed area below the BFE and, as such, must have openings that equalize hydrostatic pressures by allowing for the automatic entry and exit of floodwaters. For guidance, see FEMA Technical Bulletin 1-93;
3. Crawl space construction is not permitted in V zones. Open pile or column foundations that withstand storm surge and wave forces are required in V zones;
4. Portions of the building below the BFE must be constructed with materials resistant to flood damage. This includes not only the foundation walls of the crawl space used to elevate the building, but also any joists, insulation, or other materials that extend below the BFE; and
5. Any building utility systems within the crawl space must be elevated above BFE or designed so that floodwaters cannot enter or accumulate within the system components during flood conditions.
6. Requirements for all below-grade crawl space construction, in addition to the above requirements, to include the following:
   - *i. The interior grade of a crawl space below the BFE must not be more than two feet below the lowest adjacent exterior grade (LAG), shown as D in Fig. 3 of Technical Bulletin 11-01;*
   - *ii. The height of the below-grade crawl space, measured from the interior grade of the crawl space to the top of the crawl space foundation wall must not exceed four feet (shown as L in Figure 3 of Technical Bulletin 11-01) at any point;*
   - *iii. There must be an adequate drainage system that removes floodwaters from the interior area of the crawl space within a reasonable period of time after a flood event, not to exceed 72 hours; and*
   - *iv. The velocity of floodwaters at the site should not exceed five feet per second for any crawl space. For velocities in excess of five feet per second, other foundation types should be used.*

g. *Mudslide (i.e., Mudflow) Prone Areas. (Zone M)* (*omitted*).

h. *Flood-related erosion-prone areas. (Zone E)* (*omitted*).

GENERAL NOTES:

CODE COMPLIANCE:

ALL CONSTRUCTION SHALL COMPLY WITH THE 2019 CALIFORNIA BUILDING CODE (CBC), BASED ON THE 2018 INTERNATIONAL BUILDING CODE, THE 2019 CALIFORNIA RESIDENTIAL CODE (CRC), BASED ON THE 2018 INTERNATIONAL RESIDENTIAL CODE, THE 2019 CALIFORNIA ELECTRICAL CODE (CEC), INCORPORATING BY ADOPTION THE 2017 NATIONAL ELECTRICAL CODE, THE 2019 CALIFORNIA MECHANICAL CODE (CMC), BASED ON THE 2018 UNIFORM MECHANICAL CODE, THE 2019 CALIFORNIA PLUMBING CODE (CPC), BASED ON THE 2018 UNIFORM PLUMBING CODE, THE 2019 CALIFORNIA ENERGY CODE (CEES), THE 2019 CALIFORNIA FIRE CODE (CFC), BASED ON THE 2018 INTERNATIONAL FIRE CODE, THE 2019 CALIFORNIA GREEN BUILDING STANDARDS CODE (CGBSC ALSO REFERRED TO AS CALGREEN) AND ALL PROVISIONS OF THE COUNTY OF SANTA CLARA CODES AND ORDINANCES.

BUILDING DATA:

OCCUPANCY:	GROUP R, DIVISION 3 (R-3) / U
TYPE OF CONSTRUCTION:	VB
FIRE SPRINKLERS:	TO BE DETERMINED
ZONING:	A-20AC-sr

DEFERRED SUBMITTALS:

1. FIRE SPRINKLER SYSTEM (IF REQUIRED): PROVIDE FIRE SPRINKLER PLANS AND DETAILS TO THE BUILDING DEPARTMENT FOR APPROVAL PRIOR TO INSTALLATION. REFER TO CRC SECTION R313.3 OR NFPA 13D.
2. THE CONTRACTOR SHALL VERIFY GAS APPLIANCE AND EQUIPMENT DEMAND LOADING AND SUBMIT A SINGLE LINE GAS PIPING DIAGRAM TO THE BUILDING DEPARTMENT FOR APPROVAL PRIOR TO ISSUANCE OF THE PLUMBING PERMIT OR AT THE TIME OF INSPECTION, AS REQUIRED BY THE COUNTY.
3. MANUFACTURED TRUSSES; TRUSS CALCULATIONS / DRAWINGS DEFERRED SUBMITTAL TO BE REVIEWED AND APPROVED BY THE PROJECT ENGINEER PRIOR TO MANUFACTURE AND SUBMITTED FOR BUILDING DEPARTMENT APPROVAL PRIOR TO INSTALLATION OR AS OTHERWISE REQUIRED BY THE COUNTY.

GENERAL:

1. IT IS THE RESPONSIBILITY OF THE CONTRACTOR AND SUBCONTRACTOR TO NOTIFY THE OWNER OF ANY CONDITIONS FOUND IN THE FIELD TO BE DIFFERENT FROM THOSE SHOWN ON THE PLANS, OR OF ERRORS OR OMISSIONS ON THE PLANS WHICH MAY AFFECT THE COMPLETION OF THE PROJECT.

STRUCTURE / FRAMING / SIDING:

1. PROVIDE 1x6 T&G DF SURFACED FACE SHEATHING AT ALL PORCH SOFFITS AND EXPOSED EAVES AND GABLE ENDS – TYPICAL
2. VERIFY DOOR AND WINDOW HEADER HEIGHTS AND ALIGN TOPS OF DOOR AND WINDOW FRAMES AND/OR HEAD TRIM, VERIFY WITH OWNER. ALL WINDOWS ARE INSET 2" FRAME EXTERIOR FACE OF WALL FRAMING, REFER TO WINDOW DETAIL
3. PROVIDE 5/8" TYPE "X" GYPSUM BOARD SHEATHING AT GARAGE SIDE OF WALLS (1/2" GYPSUM BOARD MINIMUM REQUIRED BY CRC TABLE R302.6). EXTEND REAR AND SIDE WALLS OF GARAGE SEPARATION TO UNDERSIDE OF ROOF PROVIDING A COMPLETE BUILDING SEPARATION BETWEEN THE GARAGE AND GARAGE ATTIC AREAS FROM LIVING AREAS, REFER TO CRC 302.5 FOR SEPARATION PENETRATIONS.
4. A RADIANT BARRIER MUST BE INSTALLED ON THE UNDERSIDE OF THE ROOF SHEATHING, REFER TO ENERGY COMPLIANCE DOCUMENTATION FOR SPECIFIC REQUIREMENTS.
5. PROVIDE GALVANIZED SHEET METAL "TERMITE FLASHING" AT ANY CONCRETE PATIO, TERRACE AND STEPS INTERSECTION WITH BUILDING, INSTALL FLASHING UNDER FOUNDATION SILL AND EXTEND UPWARDS ON WALL OVER PLYWOOD SHEATHING 6" MINIMUM ABOVE FINISH CONCRETE SURFACE.

CONTACT INFORMATION:

PROPERTY OWNER / BUILDING DESIGNER:

ALEX & DEEDEE OCEGUERA
13115 UVAS ROAD
MORGAN HILL, CA 95037
ALEX: PHONE: (650) 400-2415
EMAIL: OCEGUERA.ALEX@GMAIL.COM
DEEDEE: PHONE: (650 339-0747
EMAIL: DDOCEGUERA@GMAIL.COM

TOPOGRAPHICAL SURVEY:

MID COAST ENGINEERS
70 PENNY LANE, SUITE A
WATSONVILLE, CA 95076
(831) 724-2580

GEOTECHNICAL ENGINEER:

ROCK SOLID ENGINEERING, INC.
100 MAIN STREET, SUITE A
WATSONVILLE, CA 95076
(831) 724-5868
EMAIL: OFFICE@ROCKSOLIDENGINEERS.COM

CIVIL ENGINEER (GRADING AND DRAINAGE):

LEA & BRAZE ENGINEERING, INC.
2495 INDUSTRIAL PARKWAY WEST
HAYWARD, CA 94545
(510) 887-4086

STRUCTURAL ENGINEER:

SUNG ENGINEERING INC.
29300 KOHOUTEK WAY
UNION CITY, CA 94587
PHONE: (510) 475-7900
FAX: (510) 475-7913
EMAIL: PSUNG@SUNGENGR.COM

ENERGY COMPLIANCE:

NRG SOLUTIONS / 5 STAR ENERGY
155 NOVATO DRIVE
VACAVILLE, CA 95688
(530) 545-1138
EMAIL: NRGMICAH@GMAIL.COM

SHEET INDEX:

SHEET #	DESCRIPTION
COVER	PROJECT DESCRIPTION, VICINITY MAP, SHEET INDEX, FLOOD NOTES, GENERAL NOTES
1/1	TOPOGRAPHICAL SURVEY MAP
1/16	TITLE SHEET (CIVIL ENGINEERING)
C-1.1	LEGEND AND NOTES (CIVIL)
C-1.2	OVERALL SITE PLAN
C-2.0	GRADING AND DRAINAGE PLAN
C-2.1	GRADING AND DRAINAGE PLAN
C-2.2	GRADING AND DRAINAGE PLAN
C-2.3	GRADING AND DRAINAGE PLAN
C-2.4	GRADING AND DRAINAGE PLAN
C-3.0	HORIZONTAL CONTROL PLAN
C-3.1	SITE SECTIONS
C-4.0	DETAILS
C-4.1	DETAILS
C-5.0	GRADING SPECIFICATONS
ER-1	EROSION CONTROL PLAN
BMP-1	EROSION CONTROL DETAILS
BMP-2	EROSION CONTROL DETAILS
A-1	FLOOR PLAN - OVERALL, AND KEY
A-2	FLOOR PLAN - ENLARGED, AND KEY
A-3	FRONT AND RIGHT SIDE ELEVATIONS, GENERAL NOTES (CONTINUED)
A-4	REAR AND LEFT SIDE ELEVATIONS, WINDOW DETAIL, GENERAL NOTES (CONTINUED)
A-5	CROSS SECTIONS
A-6	ROOF PLAN, ATTIC VENTILATION TABULATIONS, FOUNDATION / FLOOD VENT TABULATIONS
S1	FOUNDATION PLAN
S2	ROOF FRAMING PLAN
S3	FOUNDATION AND FRAMING DETAILS
S4	FOUNDATION AND FRAMING DETAILS
STD1	STANDARD STRUCTURAL NOTES AND SPECIFICATIONS
STD2	STANDARD STRUCTURAL DETAILS
STD3	STANDARD STRUCTURAL DETAILS
T.1	ENERGY COMPLIANCE DOCUMENTS
T.2	ENERGY COMPLIANCE DOCUMENTS
T.3	ENERGY COMPLIANCE DOCUMENTS
CG-1	CAL GREEN CHECKLIST
CG-2	CAL GREEN CHECKLIST
CG-3	CAL GREEN NOTES
CG-4	CAL GREEN NOTES

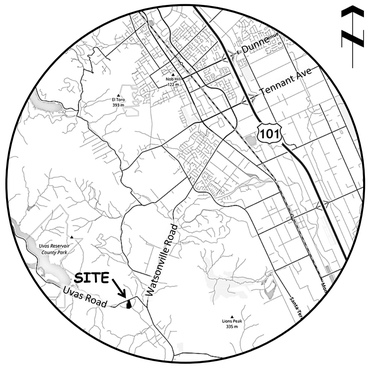

VICINITY MAP

PROJECT DESCRIPTION:

THE PROJECT PROPOSED IS THE CONSTRUCTION OF A NEW 3830 SQ. FT. SINGLE STORY, SINGLE FAMILY RESIDENCE WITH AN ATTACHED 1089 SQ. FT. 3-CAR GARAGE INCLUDING ASSOCIATED UTILITIES, SEPTIC SYSTEM, AND GRADING AND DRAINAGE IMPROVEMENTS.

REVISIONS	BY

THESE PLANS ARE PREPARED UNDER THE DIRECTION AND RESPONSIBILITY OF THE PROPERTY OWNERS; ALEX AND DEE DEE OCEGUERA AND SHALL NOT BE DUPLICATED OR REPRODUCED WITHOUT THEIR EXPRESS WRITTEN CONSENT

ALEX OCEGUERA / DEE DEE OCEGUERA
EMAIL: OCEGUERA.ALEX@GMAIL.COM / DDOCEGUERA@GMAIL.COM PHONE (650) 400-2415

NEW SINGLE FAMILY RESIDENCE:

OCEGUERA RESIDENCE

MORGAN HILL, CALIFORNIA
SANTA CLARA COUNTY

13115 UVAS ROAD
APN: 756-19-017 AND 756-19-021

Date	01/03/22
Scale	---
Job	---
Drawn	---
Sheet:	COVER
Of:	--- Sheets

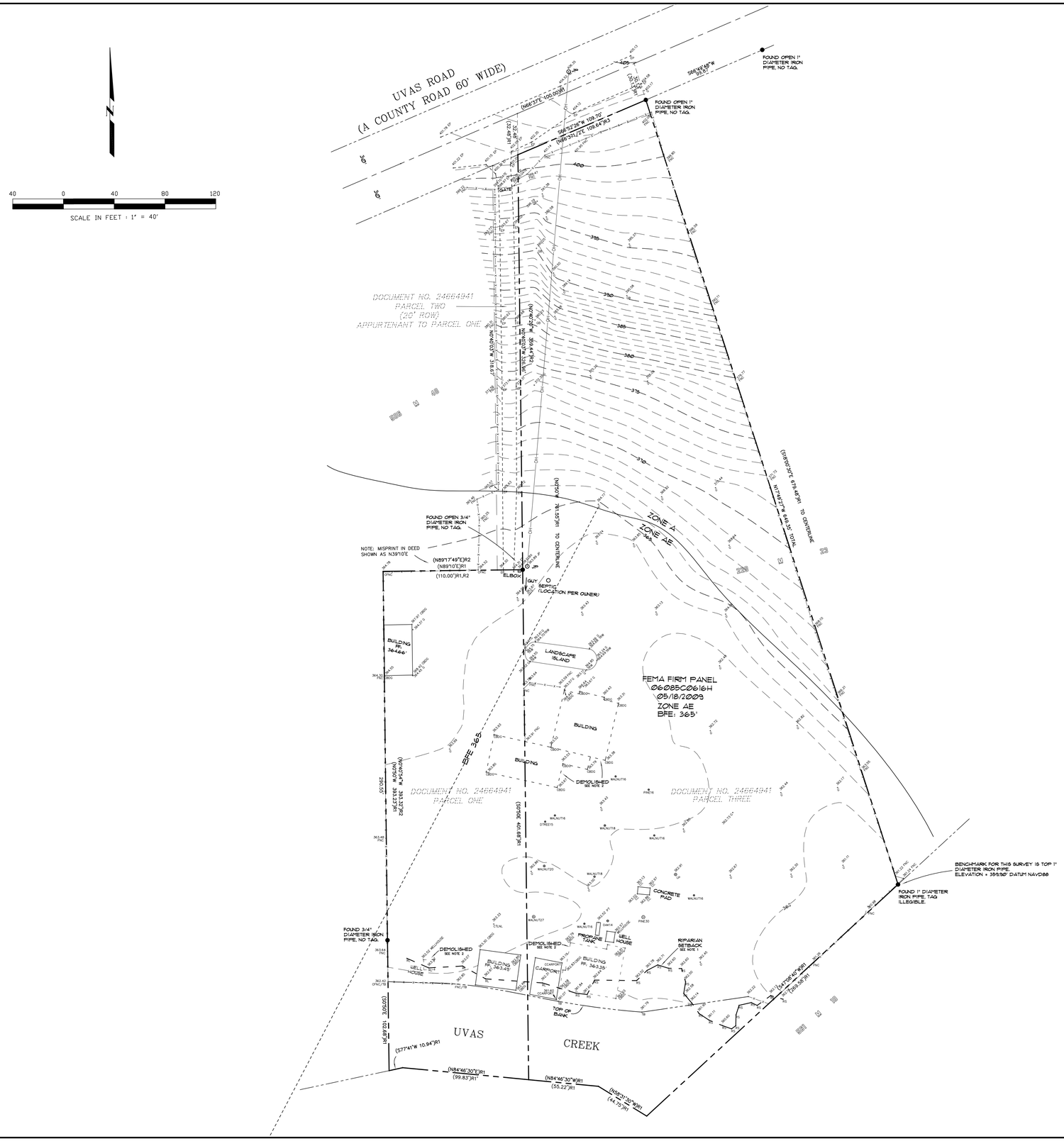

LEGEND

●	MONUMENTS FOUND AS SHOWN
	SUBJECT BOUNDARY
	ADJOINER BOUNDARY
	RIGHT OF WAY
	TIE
	FENCE
	TOP OF BANK
	RIPARIAN SETBACK
	EDGE OF PAVEMENT
	CONTOUR MAJOR
	CONTOUR MINOR

DISTANCES SHOWN IN FEET AND DECIMALS THEREOF.
CONTOUR INTERVAL EQUALS ONE FOOT.

ABBREVIATIONS

CBDG	BUILDING CORNER
CC	CONCRETE SLAB
CFNC	CORNER FENCE
CFNC/TB	CORNER FENCE / TOP OF BANK
CTNL	TEMPORARY SURVEY CONTROL
ELBX	ELECTRIC UTILITY SERVICE BOX
EP	EDGE OF PAVEMENT
FF	FINISHED FLOOR ELEVATION
FNC	FENCE
FNC/TB	FENCE/TOP OF BANK
G	GRADE
GB	GRADE BREAK
GUY	GUY ANCHOR
JP	JOINT UTILITY POLE
LP	LIGHT POLE
RS	RIPARIAN SETBACK
TB	TOP OF BANK
TRW	TOP ROCK WALL

NOTE: TREES NAMES FOLLOWED BY TRUNK DIAMETER.

RECORD DATA

( )R1	DOCUMENT NO. 24664941
( )R2	506 M 48
( )R3	228 M 23

BASIS OF BEARINGS

FOR THIS SURVEY IS NAD83 (2020) CCS ZONE 3 ESTABLISHED USING RTK GPS TECHNIQUES AND ACCESSED USING SMARTNET NORTH AMERICA.

FEMA FLOOD ZONE

FEMA FLOOD ZONE DATA OBTAINED FROM FIRM PANEL AS NOTED HEREON.

NOTE:

1. REVISED MAP PER FIELD SURVEY CONDUCTED 06/28/2021 TO SHOW RIPARIAN SETBACK. SETBACK DETERMINED BY FLAGS IN THE FIELD SET BY DAVINNA OHLSON WITH LIVE OAK ASSOCIATES.
2. MCE CREW OBSERVED PREVIOUSLY SURVEYED BUILDINGS WERE DEMOLISHED.

APN 756-19-017, 756-19-021

PROFESSIONAL LAND SURVEYOR
JEFF S. NIELSEN
No. 6832
07/07/2021
STATE OF CALIFORNIA

MID COAST ENGINEERS
CIVIL ENGINEERS AND LAND SURVEYORS
70 PENNY LANE, SUITE A WATSONVILLE, CA 95076 - (831) 724-2580

TOPOGRAPHIC SURVEY
LANDS OF
ALEJANDRO OCEGUERA AND FELICIDAD D. OCEGUERA
PER DOCUMENT NO. 24664941 OFFICIAL RECORDS OF
SANTA CLARA COUNTY.

13115 UVAS ROAD, MORGAN HILL
SANTA CLARA COUNTY
CALIFORNIA

SCALE	1" = 40'
DATE:	NOV 4 2020
REVISED:	JULY 7 2021
JOB NO.:	20117TP1
SHEET	1
OF	1 SHEETS

OCEGUERA RESIDENCE
13115 UVAS ROAD
MORGAN HILL, CA
APN: 756-19-021
756-19-017

COUNTY OF SANTA CLARA
General Construction Specifications

GENERAL CONDITIONS

1. ALL CONSTRUCTION WORK SHALL BE PERFORMED IN ACCORDANCE WITH THE SOILS AND/OR GEOTECHNICAL REPORT PREPARED BY GEOFORESNICS INC. DATED FEBRUARY 25, 2018. THIS REPORT IS SUPPLEMENTED BY: 1) THESE PLANS AND SPECIFICATIONS, 2) THE COUNTY OF SANTA CLARA STANDARD DETAILS, 3) THE COUNTY OF SANTA CLARA STANDARD SPECS, 4) STATE OF CALIFORNIA STANDARD DETAILS, 5) STATE OF CALIFORNIA STANDARD SPECIFICATIONS. IN THE EVENT OF CONFLICT THE FORMER SHALL TAKE PRECEDENCE OVER THE LATTER. THE PERFORMANCE AND COMPLETION OF ALL WORK MUST BE TO THE SATISFACTION OF THE COUNTY.
2. DEVELOPER IS RESPONSIBLE FOR INSTALLATION OF THE IMPROVEMENTS SHOWN ON THESE PLANS AND HE OR HIS SUCCESSOR PROPERTY OWNERS ARE RESPONSIBLE FOR THEIR CONTINUED MAINTENANCE.
3. DEVELOPER SHALL BE RESPONSIBLE FOR CORRECTION OF ANY ERRORS OR OMISSIONS IN THESE PLANS. THE COUNTY SHALL BE AUTHORIZED TO REQUIRE DISCONTINUANCE OF ANY WORK AND SUCH CORRECTION AND MODIFICATION OF PLANS AS MAY BE NECESSARY TO COMPLY WITH COUNTY STANDARDS OR CONDITIONS OF DEVELOPMENT APPROVAL.
4. DEVELOPER SHALL OBTAIN ENCROACHMENT PERMITS FROM THE SANTA CLARA VALLEY WATER DISTRICT AND CALIFORNIA DEPARTMENT OF TRANSPORTATION WHERE NEEDED. COPIES OF THESE PERMITS SHALL BE KEPT AT THE JOB SITE FOR REVIEW BY THE COUNTY'S INSPECTOR.
5. DEVELOPER SHALL REMOVE OR TRIM ALL TREES TO PROVIDE AN UNOBSTRUCTED FIFTEEN (15) FOOT VERTICAL CLEARANCE FOR ROADWAY AREA.
6. THIS PLAN AUTHORIZES THE REMOVAL OF ONLY THOSE TREES WITH TRUNK DIAMETERS GREATER THAN 12 INCHES MEASURED 4.5 FEET ABOVE THE GROUND THAT ARE SHOWN TO BE REMOVED UNLESS AN AMENDED PLAN IS APPROVED OR A SEPARATE TREE REMOVAL PERMIT IS OBTAINED FROM THE PLANNING OFFICE. IT IS THE CONTRACTOR'S RESPONSIBILITY TO ENSURE THAT REMOVAL OF ADDITIONAL TREES HAS BEEN PERMITTED.
7. DEVELOPER SHALL PROVIDE ADEQUATE DUST CONTROL AS REQUIRED BY THE COUNTY INSPECTOR.
8. ALL PERSONS MUST COMPLY WITH SECTION 4442 OF THE PUBLIC RESOURCES CODE AND SECTION 13005 OF THE HEALTH AND SAFETY CODE RELATING TO THE USE OF SPARK ARRESTERS.
9. UPON DISCOVERING OR UNEARTHING ANY BURIAL SITE AS EVIDENCED BY HUMAN SKELETAL REMAINS OR ARTIFACTS, THE PERSON MAKING SUCH DISCOVERY SHALL IMMEDIATELY NOTIFY THE COUNTY CORONER AT (4008) 454-2520 AND LAND DEVELOPMENT ENGINEERING OFFICE AT (408) 299-5730. NO FURTHER DISTURBANCE OF THE SITE MAY BE MADE EXCEPT AS AUTHORIZED BY THE LAND DEVELOPMENT OFFICE IN ACCORD WITH PROVISIONS OF THIS ORDINANCE (COUNTY ORDINANCE CODE SECTION B6-18).
10. THESE PLANS ARE FOR THE WORK DESCRIBED IN THE SCOPE OF WORK ONLY. A SEPARATE PERMIT WILL BE REQUIRED FOR THE SEPTIC LINE CONSTRUCTION.
11. ANY DEVIATION FROM THESE APPROVED PLANS SHALL BE RE-APPROVED IN WRITING BY THE COUNTY ENGINEER PRIOR TO CONSTRUCTION.

CONSTRUCTION STAKING

1. THE DEVELOPER'S ENGINEER IS RESPONSIBLE FOR THE INITIAL PLACEMENT AND REPLACEMENT OF CONSTRUCTION GRADE STAKES. THE STAKES ARE TO BE ADEQUATELY IDENTIFIED, LOCATED, STABILIZED, ETC. FOR THE CONVENIENCE OF CONTRACTORS. LATERAL OFFSET OF STAKES SET FOR CURBS AND GUTTERS SHALL NOT EXCEED 2 1/2 FEET FROM BACK OF CURB.
2. ANY PROPERTY LINE STAKES OR ROAD MONUMENTS DISTURBED DURING CONSTRUCTION SHALL BE REPLACED BY DEVELOPER'S ENGINEER AND LICENSED LAND SURVEYOR.
3. PROPERTY LINE STAKING MUST BE PERFORMED BY THE PROJECT ENGINEER OR LAND SURVEYOR TO ESTABLISH OR RE-ESTABLISH THE PROJECT BOUNDARY AND SHALL BE INSPECTED BY THE COUNTY INSPECTOR PRIOR TO THE BEGINNING OF THE WORK.
4. PROPER CONSTRUCTION STAKES SHALL BE SET IN THE FIELD BY THE PROJECT ENGINEER OR LAND SURVEYOR AND VERIFIED BY THE COUNTY INSPECTOR PRIOR TO THE COMMENCEMENT OF GRADING.

CONSTRUCTION INSPECTION

1. CONTRACTOR SHALL NOTIFY PERMIT INSPECTION UNIT, SANTA CLARA COUNTY PRIOR TO COMMENCING WORK AND FOR FINAL INSPECTION OF WORK AND SITE.
2. THE COUNTY REQUIRES A MINIMUM OF 24 HOURS ADVANCE NOTICE FOR GENERAL INSPECTION, 48 HOURS FOR ASPHALT CONCRETE INSPECTION.
3. INSPECTION BY SANTA CLARA COUNTY SHALL BE LIMITED TO INSPECTION OF MATERIALS AND PROCESSES OF CONSTRUCTION TO OBSERVE THEIR COMPLIANCE WITH PLANS & SPECIFICATIONS BUT DOES NOT INCLUDE RESPONSIBILITY FOR THE SUPERINTENDENT OF CONSTRUCTION, SITE CONDITIONS, EQUIPMENT OR PERSONNEL. CONTRACTOR SHALL NOTIFY THE COUNTY LAND DEVELOPMENT INSPECTOR AT PHONE (408) 299-6868 AT LEAST 24 HOURS PRIOR TO COMMENCING WORK AND FOR FINAL INSPECTION OF WORK AND SITE.
4. DEVELOPER AND/OR HIS AUTHORIZED REPRESENTATIVE MUST SUBMIT WRITTEN REQUEST FOR FINAL INSPECTION AND ACCEPTANCE. SAID REQUEST SHALL BE DIRECTED TO THE INSPECTION OFFICE NOTED ON THE PERMIT FORM.
5. THE CONTRACTOR SHALL PROVIDE TO THE COUNTY CONSTRUCTION INSPECTOR WITH PAD ELEVATION AND LOCATION CERTIFICATES, PREPARED BY THE PROJECT ENGINEER OR LAND SURVEYOR, PRIOR TO COMMENCEMENT OF THE BUILDING FOUNDATION.

SITE PREPARATION (CLEARING AND GRUBBING)

1. EXISTING TREES AUTHORIZED FOR REMOVAL, ROOTS, AND FOREIGN MATERIAL IN AREAS TO BE IMPROVED WILL BE REMOVED TO AN AUTHORIZED DISPOSAL SITE AS FOLLOWS:
   A) TO A MINIMUM DEPTH OF TWO FEET BELOW THE FINISHED GRADE OF PROPOSED ROADWAYS (EITHER PRIVATE OR TO BE DEDICATED TO PUBLIC USE)
   B) FROM AREAS AFFECTED BY THE PROPOSED GRADING EXCEPT WHERE NOTED ON THE PLANS.
2. IT SHALL BE THE RESPONSIBILITY OF THE DEVELOPER TO MOVE OR RELOCATE UTILITY POLES AND OTHER OBSTRUCTIONS IN THE WAY OF CONSTRUCTION.

UTILITY LOCATION, TRENCHING & BACKFILL

1. CONTRACTOR SHALL NOTIFY USA (UNDERGROUND SERVICE ALERT) AT 1-800-277-2600 A MINIMUM OF 24 HOURS BEFORE BEGINNING UNDERGROUND WORK FOR VERIFICATION OF THE LOCATION OF UNDERGROUND UTILITIES.
2. ACCURATE VERIFICATION AS TO SIZE, LOCATION, AND DEPTH OF EXISTING UNDERGROUND CONDUITS OR FACILITIES SHALL BE THE INDIVIDUAL CONTRACTORS RESPONSIBILITY. PLAN LOCATIONS ARE APPROXIMATE AND FOR GENERAL INFORMATION ONLY.
3. ALL UNDERGROUND INSTALLATIONS SHALL BE IN PLACE AND THE TRENCH BACKFILLED AND COMPACTED BEFORE PLACING AGGREGATE BASE MATERIAL OR SURFACE STRUCTURES. SURFACING MAY BE DONE IF THE UTILITY COMPANY CONCERNED INDICATES BY LETTER THAT IT WILL BORE. UNLESS SPECIFICALLY AUTHORIZED BY THE COUNTY, GAS AND WATER MAINS SHALL BE INSTALLED OUTSIDE THE PAVED AREAS.
4. TRENCH BACKFILL IN EXISTING PAVEMENT AREAS SHALL BE SAND MATERIAL IN ACCORDANCE WITH THE APPLICABLE PROVISIONS OF THE STATE SPECIFICATIONS. THE STRUCTURAL SECTION FOR TRENCH REPLACEMENT SHALL CONSIST OF NOT LESS THAN 12 INCHES OF APPROVED AGGREGATE BASE MATERIAL COMPACTED TO A RELATIVE COMPACTION OF AT LEAST 95% AND 4 INCHES OF HOT ASPHALT CONCRETE PLACED IN TWO LIFTS. TRENCH RESTORATION FOR HIGHER TYPE PAVEMENTS SHALL BE MADE IN KIND OR AS DIRECTED BY THE COUNTY.
5. TRENCH BACKFILL IN NEW CONSTRUCTION AREAS SHALL BE SAND MATERIAL COMPACTED TO A RELATIVE COMPACTION OF AT LEAST 90% THE REQUIREMENT FOR SELECT MATERIAL MAY BE WAIVED BY COUNTY IF THE NATIVE SOIL IS SUITABLE FOR USE AS TRENCH BACKFILL BUT THE COMPACTION REQUIREMENTS WILL NOT BE THEREBY WAIVED.
6. BACKFILL AND TRENCH RESTORATION REQUIREMENTS SHALL APPLY AS MINIMUM STANDARDS TO ALL UNDERGROUND FACILITIES INSTALLED BY OTHER FIRMS OR PUBLIC AGENCIES.

RETAINING WALLS

1. REINFORCED CONCRETE AND CONCRETE MASONRY UNIT RETAINING WALLS SHALL HAVE FOUNDATION AND REINFORCEMENT INSPECTED BY THE COUNTY ENGINEERING INSPECTOR AND ENGINEER OF RECORD PRIOR TO POURING THE FOUNDATION AND FORMING THE WALL.
2. SEGMENTAL BLOCK RETAINING WALLS SHALL HAVE FOUNDATION AND REINFORCEMENT INSPECTED BY THE COUNTY ENGINEERING INSPECTOR.

GRADING

1. EXCAVATED MATERIAL SHALL BE PLACED IN THE FILL AREAS DESIGNATED OR SHALL BE HAULED AWAY FROM THE SITE TO A COUNTY APPROVED DISPOSAL SITE. WHERE FILL MATERIAL IS TO BE PLACED ON NATURAL GROUND, IS SHALL BE STRIPPED OF ALL VEGETATION. TO ACHIEVE A PROPER BOND WITH THE FILL MATERIAL, THE SURFACE OF THE GROUND SHALL BE SCARIFIED TO DEPTH OF 6" BEFORE FILL IS PLACED. WHERE NATURAL GROUND IS STEEPER THAN 5:1, IT SHALL BE BENCHED AND THE FILL KEYED IN TO ACHIEVE STABILITY. WHERE NEW FILL IS TO BE PLACED ON EXISTING FILL THE EXISTING FILL SHALL BE REMOVED UNTIL MATERIAL COMPACTED TO 90% RELATIVE COMPACTION IS EXPOSED. THEN THE NEW FILL MATERIAL SHALL BE PLACED AS PER THESE CONSTRUCTION NOTES. FILL MATERIAL SHALL BE PLACED IN UNIFORM LIFTS NOT EXCEEDING 6" IN UNCOMPACTED THICKNESS. BEFORE COMPACTION BEGINS, THE FILL SHALL BE BROUGHT TO A WATER CONTENT THAT WILL PERMIT PROPER COMPACTION BY EITHER 1) AERATING THE FILL IF IT IS TOO WET OR 2) MOISTENING THE FILL WITH WATER IF IT IS TOO DRY. EACH LIFT SHALL BE THOROUGHLY MIXED BEFORE COMPACTION TO ENSURE A UNIFORM DISTRIBUTION OF MOISTURE.
2. EXCESS CUT MATERIAL SHALL NOT BE SPREAD OR STOCKPILED ON THE SITE.
3. SURPLUS EARTH FILL MATERIAL SHALL BE PLACED IN A SINGLE (8" MAX) THICK LAYER COMPACTED TO WITHSTAND WEATHERING IN THE AREA(S) DELINEATED ON THE PLAN.
4. NO ORGANIC MATERIAL SHALL BE PLACED IN ANY FILL. NO TREES SHALL BE REMOVED OUTSIDE OF CUT, FILL OR ROADWAY AREAS.
5. THE UPPER 6" OF SUBGRADE BELOW DRIVEWAY ACCESS ROAD OR PARKING AREA SHALL BE COMPACTED TO 95% OF MAXIMUM DENSITY.
6. MAXIMUM CUT SLOPE SHALL BE 2 HORIZONTAL TO 1 VERTICAL. MAXIMUM FILL SLOPE SHALL BE 2 HORIZONTAL TO 1 VERTICAL.

LOCATION	CUT (C.Y.)	FILL (C.Y.)	VERT. DEPTH
RESIDENCE	0	265	2.5'
ACCESSORY STRUCTURE	0	0	0
POOL/HARDSCAPE	148	322	5'
LANDSCAPE	118	989	3'
DRIVEWAY	59	61	2'
OFF SITE IMPROVEMENTS	0	0	0'
TOTAL	325	1,637	

NOTE: FILL VOLUMES INCLUDE 10% SHRINKAGE.

EXCESS MATERIAL SHALL BE OFF HAULED TO A COUNTY APPROVED DUMP SITE.

7. NOTIFY SOILS ENGINEER TWO (2) DAYS PRIOR TO COMMENCEMENT OF ANY GRADING WORK TO COORDINATE THE WORK IN THE FIELD.
8. ALL MATERIALS FOR FILL SHOULD BE APPROVED BY THE SOILS ENGINEER BEFORE IT IS BROUGHT TO THE SITE.
9. THE UPPER 6" OF THE SUBGRADE SOIL SHALL BE SCARIFIED, MOISTURE CONDITIONED AND COMPACTED TO A MINIMUM RELATIVE COMPACTION OF 95%
10. ALL AGGREGATE BASE MATERIAL SHALL BE COMPACTED TO A MINIMUM 95% RELATIVE COMPACTION.
11. THE GEOTECHNICAL PLAN REVIEW LETTER MUST BE REVIEWED AND APPROVED BY THE COUNTY GEOLOGIST PRIOR TO FINAL APPROVAL BY THE COUNTY ENGINEER FOR BUILDING OCCUPANCY.
12. THE PROJECT GEOTECHNICAL ENGINEER SHALL PERFORM COMPACTION TESTING AND PRESENT THE RESULTS TO THE COUNTY ENGINEERING INSPECTOR PRIOR TO THE CONSTRUCTION OF ANY PAVED AREA.
13. GRADING WORK BETWEEN OCTOBER 15TH AND APRIL 15TH IS AT THE DISCRETION OF THE SANTA CLARA COUNTY GRADING OFFICIAL.
14. TOTAL DISTURBED AREA FOR THE PROJECT ______79,015______SF.
15. WDID NO.________N/A__________.
16. THE INSPECTOR MAY VERIFY THAT A VALID NOTICE OF INTENT (NOI) HAS BEEN ISSUED BY THE STATE AND THAT A CURRENT AND UP TO DATE STORM WATER POLLUTION PREVENTION PLAN (SWPPP) IS AVAILABLE ON SITE.

TREE PROTECTION

1. FOR ALL TREES TO BE RETAINED WITH A CANOPY IN THE DEVELOPMENT AREA OR INTERFACES WITH THE LIMITS OF GRADING FOR ALL PROPOSED DEVELOPMENT ON SITE, THE TREES SHALL BE PROTECTED BY THE PLACEMENT OF RIGID TREE PROTECTIVE FENCING, CONSISTENT WITH THE COUNTY INTEGRATED LANDSCAPE GUIDELINES, AND INCLUDE THE FOLLOWING:
   A. FENCING SHOULD BE PLACED ALONG THE OUTSIDE EDGE OF THE DRIPLINE OF THE TREE OR GROVE OF TREES.
   B. THE FENCING SHALL BE MAINTAINED THROUGHOUT THE SITE CONSTRUCTION PERIOD AND SHALL BE INSPECTED PERIODICALLY FOR DAMAGE AND PROPER FUNCTION.
   C. FENCING SHALL BE REPAIRED, AS NECESSARY, TO PROVIDE A PHYSICAL BARRIER FROM CONSTRUCTION ACTIVITIES.
   D. SIGNAGE STATING, "WARNING- THIS FENCING SHALL NOT BE REMOVED WITHOUT PERMISSION FROM THE SANTA CLARA COUNTY PLANNING OFFICE (408) 299-5770. COUNTY OF SANTA CLARA TREE PROTECTION MEASURES MAY BE FOUND AT http://www.sccplanning.gov." SHALL BE PLACED ON THE TREE PROTECTIVE FENCING UNTIL FINAL OCCUPANCY.
2. PRIOR TO COMMENCEMENT OF ANY CONSTRUCTION ACTIVITY, TREE PROTECTIVE FENCING SHALL BE SECURELY IN PLACED AND INSPECTED BY THE LAND DEVELOPMENT ENGINEERING INSPECTOR.
3. SEE EXISTING TREE PROTECTION DETAILS FOR MORE INFORMATION.

ACCESS ROADS AND DRIVEWAYS

1. DRIVEWAY LOCATIONS SHALL BE AS SHOWN ON THE IMPROVEMENT PLANS WITH CENTERLINE STATIONING. THE MINIMUM CONCRETE THICKNESS SHALL BE 6 INCHES THROUGHOUT (WITH A MAXIMUM APPROACH SLOPE OF 1 1/4 INCHES PER FOOT).
2. ALL DRIVEWAY OR COMMON ACCESS ROAD SECTIONS IN EXCESS OF 15 LONGITUDINAL SLOPE MUST BE PAVED WITH A MINIMUM 2-INCH ASPHALT LIFT OR FULL DEPTH CONCRETE LIFT PRIOR TO ANY COMBUSTIBLE FRAMING.
3. THE OWNER AND PRIME CONTRACTOR ARE RESPONSIBLE FOR MAINTAINING PROJECT SITE ACCESS AND NEIGHBORHOOD ACCESS FOR EMERGENCY VEHICLES AND LOCAL RESIDENTS.
4. ROADWAYS DESIGNATED AS NOT COUNTY MAINTAINED ROADS AS SHOWN ON THE PLAN WILL NOT BE ELIGIBLE FOR COUNTY MAINTENANCE UNTIL THE ROADWAYS ARE IMPROVED (AT NO COST TO THE COUNTY) TO THE PUBLIC MAINTENANCE ROAD STANDARDS APPROVED BY THE BOARD OF SUPERVISORS AND IN EFFECT AT SUCH TIME THAT THE ROADWAYS ARE CONSIDERED FOR ACCEPTANCE INTO THE COUNTY'S ROAD SYSTEM.
5. ALL WORK IN THE COUNTY ROAD RIGHT-OF-WAY REQUIRES AN ENCROACHMENT PERMIT FROM THE ROADS AND AIRPORTS DEPARTMENT. EACH INDIVIDUAL ACTIVITY REQUIRES A SEPARATE PERMIT – I.E. CABLE, ELECTRICAL, GAS, SEWER, WATER, RETAINING WALLS, DRIVEWAY APPROACHES, FENCES, LANDSCAPING, TREE REMOVAL, STORM DRAINAGE IMPROVEMENTS, ETC..

STREET LIGHTING

1. PACIFIC GAS & ELECTRIC ELECTROLIER SERVICE FEE SHALL BE PAID BY THE DEVELOPER AND/OR HIS AUTHORIZED REPRESENTATIVE.

SANITARY SEWER

1. THE SANITARY SEWER AND WATER UTILITIES SHOWN ON THESE PLANS ARE NOT PART OF THIS GRADING PERMIT AND ARE SHOWN FOR REFERENCE ONLY.
2. ALL MATERIALS AND METHODS OF CONSTRUCTION OF SANITARY SEWERS SHALL CONFORM TO THE SPECIFICATIONS OF THE JURISDICTION INVOLVED. INSPECTION OF SANITARY SEWER WORK SHALL BE DONE BY SAID JURISDICTION.

PORTLAND CEMENT CONCRETE

1. CONCRETE USED FOR STRUCTURAL PURPOSES SHALL BE CLASS "A" (6 SACK PER CUBIC YARD) AS SPECIFIED IN THE STATE STANDARD SPECIFICATIONS. CONCRETE PLACED MUST DEVELOP A MINIMUM STRENGTH FACTOR OF 2800 PSI IN A SEVEN-DAY PERIOD. THE CONCRETE MIX DESIGN SHALL BE UNDER THE CONTINUAL CONTROL OF THE COUNTY INSPECTOR.

AIR QUALITY, LANDSCAPING AND EROSION CONTROL

1. WATER ALL ACTIVE CONSTRUCTION AREAS AT LEAST TWICE DAILY.
2. COVER ALL TRUCKS HAULING SOIL, SAND, AND OTHER LOOSE MATERIALS OR REQUIRE ALL TRUCKS TO MAINTAIN AT LEAST TWO FEET OF FREEBOARD.
3. PAVE, APPLY WATER THREE TIMES DAILY, OR APPLY (NON-TOXIC) SOIL STABILIZERS ON ALL UNPAVED ACCESS ROADS, PARKING AREAS AND STAGING AREAS AT CONSTRUCTION SITES.
4. SWEEP DAILY (WITH WATER SWEEPERS) ALL PAVED ACCESS ROADS, PARKING AREAS AND STAGING AREAS AT CONSTRUCTION SITES. THE USE OF DRY POWDER SWEEPING IS PROHIBITED.
5. SWEEP STREETS DAILY (WITH WATER SWEEPERS) IF VISIBLE SOIL MATERIAL IS CARRIED ONTO ADJACENT PUBLIC STREETS. THE USE OF DRY POWDER SWEEPING IS PROHIBITED.
6. ALL CONSTRUCTION VEHICLES, EQUIPMENT AND DELIVERY TRUCKS SHALL HAVE A MAXIMUM IDLING TIME OF 5 MINUTES (AS REQUIRED BY THE CALIFORNIA AIRBORNE TOXIC CONTROL MEASURE TITLE 13, SECTION 2485 OF CALIFORNIA CODE OF REGULATIONS (CCR)). ENGINES SHALL BE SHUT OFF IF CONSTRUCTION REQUIRES LONGER IDLING TIME UNLESS NECESSARY FOR PROPER OPERATION OF THE VEHICLE.
7. ALL VEHICLE SPEEDS ON UNPAVED ROADS SHALL BE LIMITED TO 15 MILES PER HOUR.
8. ALL CONSTRUCTION EQUIPMENT SHALL BE MAINTAINED AND PROPERLY TUNED IN ACCORDANCE WITH MANUFACTURER'S SPECIFICATIONS. ALL EQUIPMENT SHALL BE CHECKED BY A CERTIFIED MECHANIC AND DETERMINED TO BE RUNNING IN PROPER CONDITION PRIOR TO OPERATION.
9. POST A SIGN THAT IS AT LEAST 32 SQUARE FEET MINIMUM 2 INCHES LETTER HEIGHT VISIBLE NEAR THE ENTRANCE OF CONSTRUCTION SITE THAT IDENTIFIES THE FOLLOWING REQUIREMENTS. OBTAIN ENCROACHMENT PERMIT FOR SIGN FROM ROADS DEPARTMENT OR OTHER APPLICABLE AGENCY IF REQUIRED.
   A. 15 MILES PER HOUR (MPH) SPEED LIMIT
   B. 5 MINUTES MAXIMUM IDLING TIME OF VEHICLES
   C. TELEPHONE NUMBER TO CONTACT THE BAY AREA AIR QUALITY MANAGEMENT DISTRICT REGARDING DUST COMPLAINTS. NOTE PHONE NUMBER OF THE BAY AREA AIR QUALITY MANAGEMENT DISTRICT AIR POLLUTION COMPLAIN HOTLINE OF 1-800-334-6367.
10. ALL FILL SLOPES SHALL BE COMPACTED AND LEFT IN A SMOOTH AND FIRM CONDITION CAPABLE OF WITHSTANDING WEATHERING.
11. ALL EXPOSED DISTURBED AREAS SHALL BE SEEDED WITH BROME SEED SPREAD AT THE RATE OF 5 LB. PER 1000 SQUARE FEET (OR APPROVED EQUAL). SEEDING AND WATERING SHALL BE MAINTAINED AS REQUIRED TO ENSURE GROWTH.
12. ALL DITCHES SHALL BE LINED PER COUNTY STANDARD SD8.
13. ALL STORM DRAINAGE STRUCTURES SHALL BE INSTALLED WITH EFFECTIVE ENTRANCE & OUTFALL EROSION CONTROLS E.G. SACKED CONCRETE RIP-RAP. ENERGY DISSIPATERS SHALL BE INSTALLED AT ALL DITCH OUTFALLS. WHERE OUTFALLS ARE NOT INTO AN EXISTING CREEK OR WATER COURSE, RUNOFF SHALL BE RELEASED TO SHEET FLOW.
14. PRIOR TO GRADING COMPLETION AND RELEASE OF THE BOND, ALL GRADED AREAS SHALL BE RESEEDED IN CONFORMANCE WITH THE COUNTY GRADING ORDINANCE TO MINIMIZE THE VISUAL IMPACTS OF THE GRADE SLOPES AND REDUCE THE POTENTIAL FOR EROSION OF THE SUBJECT SITE.
15. PERMANENT LANDSCAPING SHOWN ON THE ATTACHED LANDSCAPE PLAN MUST BE INSTALLED AND FIELD APPROVED BY THE COUNTY PLANNING OFFICE PRIOR TO FINAL APPROVAL BY THE COUNTY ENGINEER, AND FINAL OCCUPANCY RELEASE BY THE BUILDING INSPECTION OFFICE.
16. THE OWNER SHALL PREPARE AND PRESENT A WINTERIZATION REPORT TO THE COUNTY INSPECTOR FOR REVIEW PRIOR TO OCTOBER 15TH OF EVERY YEAR.
17. THE OWNER, CONTRACTOR, AND ANY PERSON PERFORMING CONSTRUCTION ACTIVITIES SHALL INSTALL AND MAINTAIN CONSTRUCTION BEST MANAGEMENT PRACTICES (BMPS) ON THE PROJECT SITE AND WITHIN THE SANTA CLARA COUNTY ROAD RIGHT-OF-WAY THROUGHOUT THE DURATION OF THE CONSTRUCTION AND UNTIL THE ESTABLISHMENT OF PERMANENT STABILIZATION AND SEDIMENT CONTROL TO PREVENT THE DISCHARGE OF POLLUTANTS INCLUDING SEDIMENT, CONSTRUCTION MATERIALS, EXCAVATED MATERIALS, AND WASTE INTO THE SANTA CLARA COUNTY RIGHT-OF-WAY, STORM SEWER WATERWAYS, ROADWAY INFRASTRUCTURE. BMPS SHALL INCLUDE, BUT NOT BE LIMITED TO THE FOLLOWING;
   A. PREVENTION OF POLLUTANTS IN STORM WATER DISCHARGES FROM THE CONSTRUCTION SITE AND THE CONTRACTOR'S MATERIAL AND EQUIPMENT LAYDOWN / STAGING AREAS.
   B. PREVENTION OF TRACKING OF MUD, DIRT, AND CONSTRUCTION MATERIALS ONTO THE PUBLIC ROAD RIGHT-OF-WAY.
   C. PREVENTION OF DISCHARGE OF WATER RUN-OFF DURING DRY AND WET WEATHER CONDITIONS ONTO THE PUBLIC ROAD RIGHT-OF-WAY.
18. THE OWNER, CONTRACTOR, AND ANY PERSON PERFORMING CONSTRUCTION ACTIVITIES SHALL ENSURE THAT ALL TEMPORARY CONSTRUCTION FACILITIES, INCLUDING BUT NOT LIMITED TO CONSTRUCTION MATERIALS, DELIVERIES, HAZARDOUS AND NON-HAZARDOUS MATERIAL STORAGE, EQUIPMENT, TOOLS, PORTABLE TOILETS, CONCRETE WASHOUT, GARBAGE CONTAINERS, LAYDOWN YARDS, SECONDARY CONTAINMENT AREAS, ETC. ARE LOCATED OUTSIDE THE SANTA CLARA COUNTY ROAD RIGHT-OF-WAY.
19. EROSION CONTROL PLAN IS A GUIDE AND SHALL BE AMENDED AS NECESSARY TO PREVENT EROSION AND ILLICIT DISCHARGES ON A YEAR AROUND BASIS, DEPENDING ON THE SEASON, WEATHER, AND FIELD CONDITIONS. EROSION CONTROL MEASURES IN ADDITION TO THOSE NOTED IN THE PERMITTED PLANS MAY BE NECESSARY. FAILURE TO INSTALL SITE AND SITUATIONALLY APPROPRIATE EROSION CONTROL MEASURES MAY RESULT IN VIOLATIONS, FINES, AND A STOPPAGE OF WORK.

STORM DRAINAGE AND STORMWATER MANAGEMENT

1. DEVELOPER IS RESPONSIBLE FOR ALL NECESSARY DRAINAGE FACILITIES WHETHER SHOWN ON THE PLANS OR NOT AND HE OR HIS SUCCESSOR PROPERTY OWNERS ARE RESPONSIBLE FOR THE ADEQUACY AND CONTINUED MAINTENANCE OF THESE FACILITIES IN A MANNER WHICH WILL PRECLUDE ANY HAZARD TO LIFE, HEALTH, OR DAMAGE TO ADJOINING PROPERTY, CONSISTENT WITH NPDES PERMIT CAS612008 / ORDER NO. R2-2009-0047 AND NPDES PERMIT CAS000004/ ORDER NO. 2013-0001-DWQ.
2. DROP INLETS SHALL BE COUNTY STANDARD TYPE 5 UNLESS OTHERWISE NOTED ON THE PLANS. THE DEVELOPER'S ENGINEER SHALL BE RESPONSIBLE FOR THE PROPER LOCATION OF DROP INLETS. WHERE STREET PROFILE GRADE EXCEEDS 6% DROP INLETS SHALL BE SET AT 500 ANGLE CURB LINE TO ACCEPT WATER OR AS SHOWN ON THE PLANS.
3. WHERE CULVERTS ARE INSTALLED THE DEVELOPER SHALL BE RESPONSIBLE FOR GRADING THE OUTLET DITCH TO DRAIN TO AN EXISTING SWALE OR TO AN OPEN AREA FOR SHEET FLOW.
4. UPON INSTALLATION OF DRIVEWAY CONNECTIONS, PROPERTY OWNERS SHALL PROVIDE FOR THE UNINTERRUPTED FLOW OF WATER IN ROADSIDE DITCHES.
5. THE COUNTY SHALL INSPECT UNDERGROUND DRAINAGE IMPROVEMENTS AND STORMWATER MANAGEMENT FEATURES PRIOR TO BACKFILL.

AS-BUILT PLANS STATEMENT

THIS IS A TRUE COPY OF THE AS-BUILT PLANS. THERE (____ WERE) (____ WERE NOT) MINOR FIELD CHANGES – MARKED WITH THE SYMBOL (*). THERE (____WERE) (____ WERE NOT) PLAN REVISIONS INDICATING SIGNIFICANT CHANGES REVIEWED BY THE COUNTY ENGINEER AND MARKED WITH THE SYMBOL △.

DATE ______________ SIGNATURE ______________

NOTE: THIS STATEMENT IS TO BE SIGNED BY THE PERSON AUTHORIZED BY THE COUNTY ENGINEER TO PERFORM THE INSPECTION WORK. A REPRODUCIBLE COPYOF THE AS-BUILT PLANS MUST BE FURNISHED TO THE COUNTY ENGINEER AFTERCONSTRUCTION.

GEOTECHNICAL ENGINEER OBSERVATION

1. A CONSTRUCTION OBSERVATION LETTER FROM THE RESPONSIBLE GEOTECHNICAL ENGINEER AND ENGINEERING GEOLOGIST DETAILING CONSTRUCTION OBSERVATIONS AND CERTIFYING THAT THE WORK WAS DONE IN ACCORDANCE WITH THE RECOMMENDATIONS IN THE GEOTECHNICAL AND GEOLOGIC REPORTS SHALL BE SUBMITTED PRIOR TO THE GRADING COMPLETION AND RELEASE OF THE BOND.

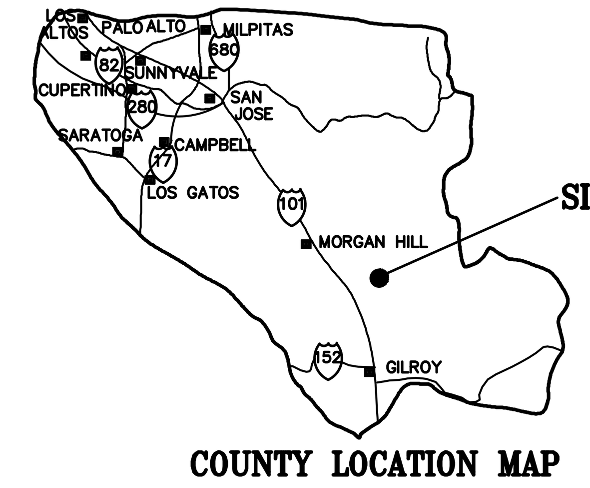

COUNTY LOCATION MAP

COUNTY LOCATION MAP

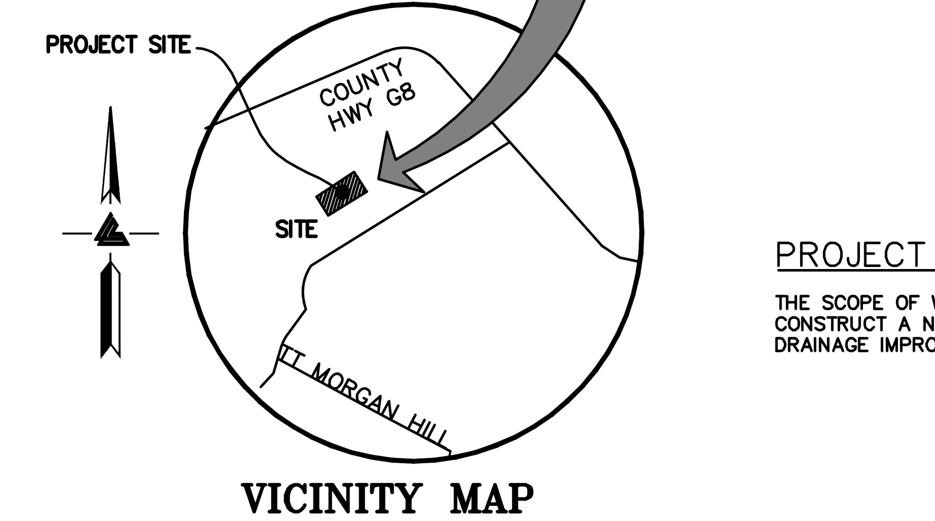

VICINITY MAP
NTS

SURVEY MONUMENT PRESERVATION

1. THE LANDOWNER / CONTRACTOR MUST PROTECT AND ENSURE THE PERPETUATION OF SURVEY MONUMENTS AFFECTED BY CONSTRUCTION ACTIVITIES.
2. PRIOR TO THE START OF CONSTRUCTION, THE CONTRACTOR SHALL LOCATE, STAKE, AND FLAG OR OTHERWISE IDENTIFY WITH PAINT OR OTHER MARKINGS ALL PERMANENT SURVEY MONUMENTS OF RECORD AND ANY UNRECORDED MONUMENTS THAT ARE DISCOVERED THAT ARE WITHIN 50 FEET OF THE CONSTRUCTION ACTIVITY.
3. THE LANDOWNER, CONTRACTOR AND/OR ANY PERSON PERFORMING CONSTRUCTION ACTIVITIES THAT WILL OR MAY DISTURB AN EXISTING MONUMENT, CORNER STAKE, OR ANY OTHER PERMANENT SURVEYED MONUMENT SHALL CAUSE TO HAVE A LICENSED LAND SURVEYOR OR CIVIL ENGINEER, AUTHORIZED TO PRACTICE SURVEYING, ENSURE THAT A CORNER RECORD AND/OR RECORD OF SURVEY ARE FILED WITH THE COUNTY SURVEYOR'S OFFICE PRIOR TO DISTURBING SAID MONUMENTS AND RESET PERMANENT MONUMENT(S) IN THE SURFACE OF THE NEW CONSTRUCTION OR SET A WITNESS MONUMENT(S) TO PERPETUATE THE LOCATION IF ANY PERMANENT MONUMENT COULD BE DESTROYED, DAMAGED, COVERED, DISTURBED, OR OTHERWISE OBLITERATED. THE LICENSED LAND SURVEYOR OR CIVIL ENGINEER SHALL FILE A CORNER RECORD OR RECORD OF SURVEY WITH COUNTY SURVEYOR PRIOR TO FINAL ACCEPTANCE OF THE PROJECT BY THE LAND DEVELOPMENT ENGINEERING INSPECTOR.

PROJECT DESCRIPTION:

THE SCOPE OF WORK TO BE PERFORMED UNDER THIS GRADING PERMIT IS TO CONSTRUCT A NEW SINGLE FAMILY RESIDENCE WITH A PRIVATE DRIVEWAY AND DRAINAGE IMPROVEMENTS.

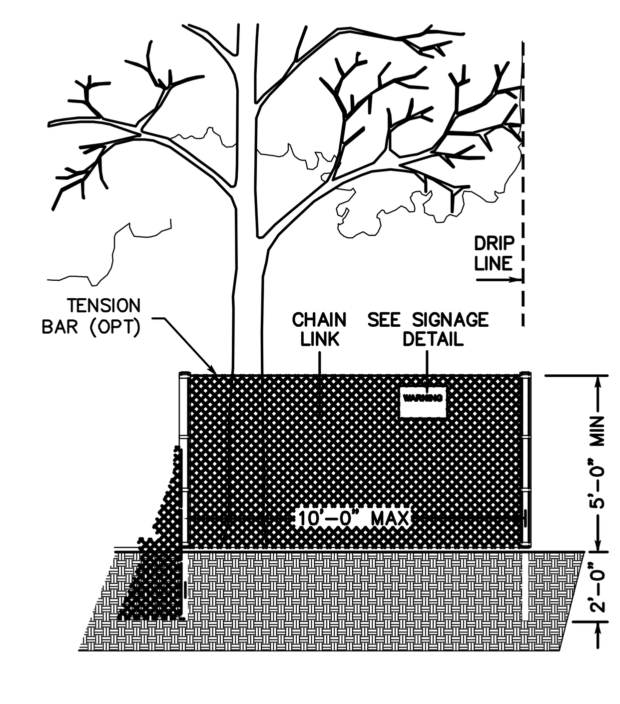

EXISTING TREE PROTECTION DETAILS

1. PRIOR TO THE COMMENCEMENT OF ANY GRADING, TREE PROTECTIVE FENCING SHALL BE IN PLACE IN ACCORDANCE WITH THE TREE PRESERVATION PLAN AND INSPECTED BY A CERTIFIED ARBORIST. THE ARBORIST SHALL MONITOR CONSTRUCTION ACTIVITY TO ENSURE THAT THE TREE PROTECTION MEASURES ARE IMPLEMENTED AND ADHERED TO DURING CONSTRUCTION. THIS CONDITION SHALL BE INCORPORATED INTO THE GRADING PLANS.
2. FENCE SHALL BE MINIMUM 5 FEET TALL CONSTRUCTED OF STURDY MATERIAL (CHAIN-LINK OR EQUIVALENT STRENGTH/ DURABILITY).
3. FENCE SHALL BE SUPPORTED BY VERTICAL POSTS DRIVEN 2 FEET (MIN) INTO THE GROUND AND SPACED NOT MORE THAN 10 FEET APART.
4. TREE FENCING SHALL BE MAINTAINED THROUGHOUT THE SITE DURING THE CONSTRUCTION PERIOD, INSPECTED PERIODICALLY FOR DAMAGE AND PROPER FUNCTION, REPAIRED AS NECESSARY TO PROVIDE A PHYSICAL BARRIER FROM CONSTRUCTION ACTIVITIES, AND REMAIN IN PLACE UNTIL THE FINAL INSPECTION.
5. A SIGN THAT INCLUDES THE WORDS, "WARNING: THIS FENCE SHALL NOT BE REMOVED WITHOUT THE EXPRESSED PERMISSION OF THE SANTA CLARA COUNTY PLANNING OFFICE," SHALL BE SECURELY ATTACHED TO THE FENCE IN A VISUALLY PROMINENT LOCATION.

COUNTY OF SANTA CLARA DEPT. OF ROADS AND AIRPORTS
ISSUED BY: ______________ DATE: ______________
ENCROACHMENT PERMIT NO. ______________

NO WORK SHALL BE DONE IN THE COUNTY'S RIGHT-OF-WAY WITHOUT AN ENCROACHMENT PERMIT, INCLUDING THE STAGING OF CONSTRUCTION MATERIAL AND THE PLACEMENT OF PORTABLE TOILETS.

COUNTY OF SANTA CLARA
LAND DEVELOPMENT ENGINEERING & SURVEYING
GRADING / DRAINAGE PERMIT NO. ______________
ISSUED BY: ______________ DATE: ______________

ENGINEER'S STATEMENT

I HEREBY STATE THAT THESE PLANS ARE IN COMPLIANCE WITH ADOPTED COUNTY STANDARDS, THE APPROVED TENTATIVE MAP (OR PLAN) AND CONDITIONS PERTAINING THERETO DATED SEPTEMBER 25, 2020 FILE(S) NO. ______________

DATE ______________ SIGNATURE ______________

REGISTERED PROFESSIONAL ENGINEER
PETER CARLINO
No. C79553
CIVIL
STATE OF CALIFORNIA
ORIGINAL SIGNATURES IN BLUE INK

COUNTY ENGINEER'S NOTE

ISSUANCE OF A PERMIT AUTHORIZING CONSTRUCTION DOES NOT RELEASE THE DEVELOPER, PERMITTEE OF ENGINEER FROM RESPONSIBILITY FOR THE CORRECTION OF ERRORS OR OMISSIONS CONTAINED IN THE PLANS. IF, DURING THE COURSE OF CONSTRUCTION, THE PUBLIC INTEREST REQUIRES A MODIFICATION OF (OR DEPARTURE FROM) THE SPECIFICATIONS OF THE PLANS, THE COUNTY SHALL HAVE THE AUTHORITY TO REQUIRE THE SUSPENSION OF WORK, AND THE NECESSARY MODIFICATION OR DEPARTURE AND TO SPECIFY THE MANNER IN WHICH THE SAME IS TO BE MADE.

DATE ______________ ______________

R.C.E. NO. EXPIRATION DATE

SHEET INDEX

C-1.1	TITLE SHEET
C-1.2	OVERALL SITE PLAN
C-2.0	GRADING AND DRAINAGE PLAN
C-2.1	GRADING AND DRAINAGE PLAN
C-2.2	GRADING AND DRAINAGE PLAN
C-2.3	GRADING AND DRAINAGE PLAN
C-2.4	GRADING AND DRAINAGE PLAN
C-3.0	UTILITY PLAN
C-3.1	UTILITY PLAN
C-3.2	UTILITY PLAN
C-3.3	UTILITY PLAN
C-3.4	UTILITY PLAN
C-4.0	HORIZONTAL CONTROL PLAN
C-4.1	SITE SECTIONS
C-5.0	DETAILS
C-5.1	DETAILS
C-5.2	COUNTY DETAILS
C-6.0	GRADING SPECIFICATIONS
ER-1	EROSION CONTROL PLAN
BMP-1	EROSION CONTROL DETAILS
BMP-2	EROSION CONTROL DETAILS

LEA & BRAZE ENGINEERING, INC.
CIVIL ENGINEERS • LAND SURVEYORS
BAY AREA REGION
2495 INDUSTRIAL PKWY WEST
HAYWARD, CALIFORNIA 94545
(P) (510) 887-4086
(F) (510) 887-3019
SACRAMENTO REGION
3017 DOUGLAS BLVD., # 300
ROSEVILLE, CA 95661
(P) (916)966-1338
(F) (916)797-7363
WWW.LEABRAZE.COM

LB#: 2211012 CI DATE: 06/15/2021

Revision 1	Date	APN 756-19-021 AND 017	Sheet 01 of 16
Revision 2	Date		
Revision 3	Date	Co. File	

PLAN # ______ SHEET ______ OF ______

APPLICANT: DEE DEE OCEGUERA ROAD NAME: UVAS ROAD COUNTY FILE NO.: TBD

LEGEND

EXISTING	PROPOSED	DESCRIPTION
		BOUNDARY
		PROPERTY LINE
		RETAINING WALL
		LANDSCAPE RETAINING WALL
	RW RW	RAINWATER TIGHTLINE
	SUB	SUBDRAIN LINE
	TL	TIGHTLINE
SD	SD	STORM DRAIN LINE
SS	SS	SANITARY SEWER LINE
W	W	WATER LINE
G	G	GAS LINE
P	SDP	STORM DRAIN PRESSURE LINE
P	SSP	SANITARY SEWER PRESSURE LINE
JT	JT	JOINT TRENCH
		SET BACK LINE
		CONCRETE VALLEY GUTTER
		EARTHEN SWALE
CB	CB	CATCH BASIN
JB	JB	JUNCTION BOX
AD	AD	AREA DRAIN
		CURB INLET
SDMH	SDMH	STORM DRAIN MANHOLE
		FIRE HYDRANT
SSMH	SSMH	SANITARY SEWER MANHOLE
		STREET SIGN
222.57 INV	222.57 INV	SPOT ELEVATION
		FLOW DIRECTION
	D	DEMOLISH/REMOVE
		BENCHMARK
200	200	CONTOURS
	XX" TREE	TREE TO BE REMOVED
	TP	TREE PROTECTION FENCING

ABBREVIATIONS

AB	AGGREGATE BASE	LF	LINEAR FEET
AC	ASPHALT CONCRETE	MAX	MAXIMUM
ACC	ACCESSIBLE	MH	MANHOLE
AD	AREA DRAIN	MIN	MINIMUM
BC	BEGINNING OF CURVE	MON.	MONUMENT
B & D	BEARING & DISTANCE	MRO	METERED RELEASE OUTLET
BM	BENCHMARK	(N)	NEW
BUB	BUBBLER BOX	NO.	NUMBER
BW/FG	BOTTOM OF WALL/FINISH GRADE	NTS	NOT TO SCALE
		O.C.	ON CENTER
CB	CATCH BASIN	O/	OVER
C & G	CURB AND GUTTER	(PA)	PLANTING AREA
℄	CENTER LINE	PED	PEDESTRIAN
CPP	CORRUGATED PLASTIC PIPE (SMOOTH INTERIOR)	PIV	POST INDICATOR VALVE
		PSS	PUBLIC SERVICES EASEMENT
CO	CLEANOUT	⅊	PROPERTY LINE
COTG	CLEANOUT TO GRADE	PP	POWER POLE
CONC	CONCRETE	PUE	PUBLIC UTILITY EASEMENT
CONST	CONSTRUCT or –TION	PVC	POLYVINYL CHLORIDE
CONC COR	CONCRETE CORNER	R	RADIUS
CY	CUBIC YARD	RCP	REINFORCED CONCRETE PIPE
D	DIAMETER	RIM	RIM ELEVATION
DI	DROP INLET	RW	RAINWATER
DIP	DUCTILE IRON PIPE	R/W	RIGHT OF WAY
EA	EACH	S	SLOPE
EC	END OF CURVE	S.A.D.	SEE ARCHITECTURAL DRAWINGS
EG	EXISTING GRADE	SAN	SANITARY
EL	ELEVATIONS	SD	STORM DRAIN
EP	EDGE OF PAVEMENT	SDMH	STORM DRAIN MANHOLE
EQ	EQUIPMENT	SHT	SHEET
EW	EACH WAY	S.L.D.	SEE LANDSCAPE DRAWINGS
(E)	EXISTING	SPEC	SPECIFICATION
FC	FACE OF CURB	SS	SANITARY SEWER
FF	FINISHED FLOOR	SSCO	SANITARY SEWER CLEANOUT
FG	FINISHED GRADE	SSMH	SANITARY SEWER MANHOLE
FH	FIRE HYDRANT	ST.	STREET
FL	FLOW LINE	STA	STATION
FS	FINISHED SURFACE	STD	STANDARD
G	GAS	STRUCT	STRUCTURAL
GA	GAGE OR GAUGE	T	TELEPHONE
GB	GRADE BREAK	TC	TOP OF CURB
HDPE	HIGH DENSITY CORRUGATED POLYETHYLENE PIPE	TOW	TOP OF WALL
		TEMP	TEMPORARY
HORIZ	HORIZONTAL	TP	TOP OF PAVEMENT
HI PT	HIGH POINT	TW/FG	TOP OF WALL/FINISH GRADE
H&T	HUB & TACK	TYP	TYPICAL
ID	INSIDE DIAMETER	VC	VERTICAL CURVE
INV	INVERT ELEVATION	VCP	VITRIFIED CLAY PIPE
JB	JUNCTION BOX	VERT	VERTICAL
JT	JOINT TRENCH	W/	WITH
JP	JOINT UTILITY POLE	W, WL	WATER LINE
L	LENGTH	WM	WATER METER
LNDG	LANDING	WWF	WELDED WIRE FABRIC

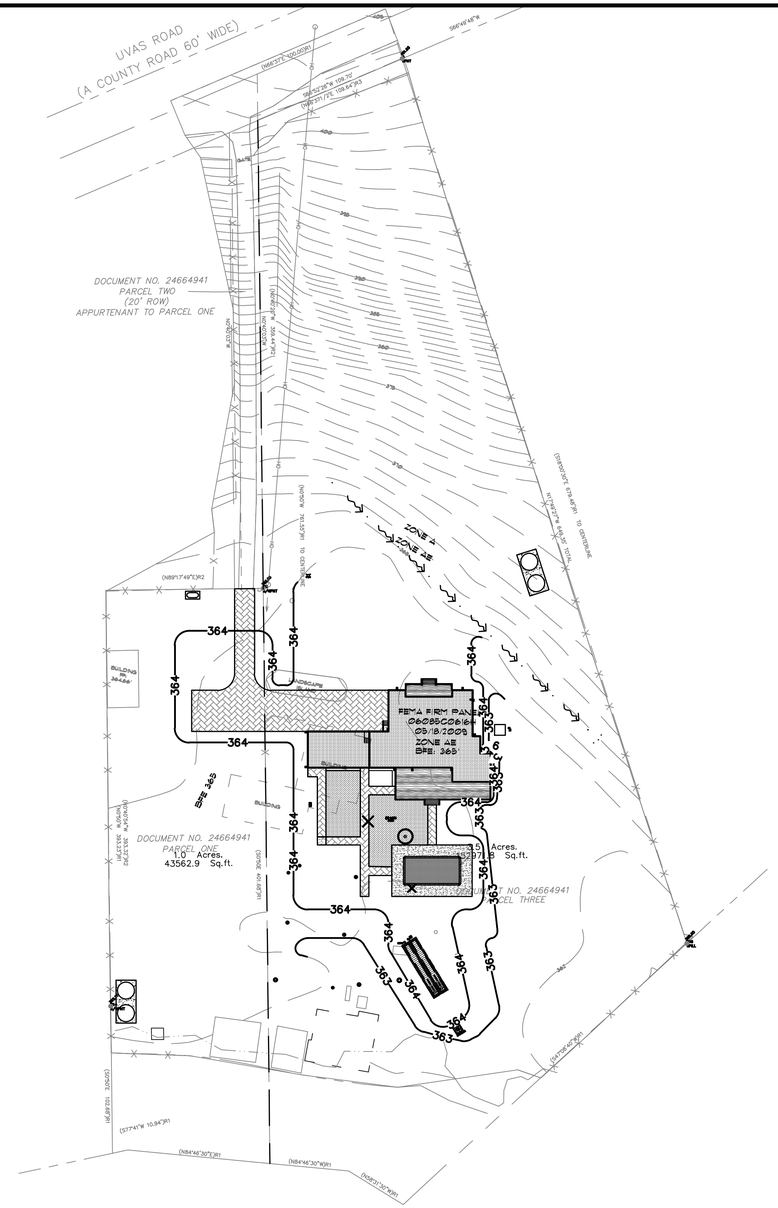

KEY MAP
1" = 50'

0 25 50 100
SCALE: 1" = 50'

OWNER'S INFORMATION

OWNER:
DEE DEE OCEGUERA
13115 UVAS ROAD
MORGAN HILL, CA

APN: 756–19–021 AND –017

REFERENCES

THIS GRADING AND DRIANAGE PLAN IS SUPPLEMENTAL TO:

1. "TOPOGRAPHIC SURVEY" BY MID COAST ENGINEERS, ENTITLED;
   13115 UVAS ROAD
   MORGAN HILL, CA
   DATED: 11–04–21
   JOB# 20117TP1
2. SITE PLAN BY RILOVISION ENTITLED:
   "(N) SITE PLAN"
   13115 UVAS ROAD
   MORGAN HILL, CA
3. SOIL REPORT BY ROCK SOLID ENGINEERING INC. ENTITLED:
   "GEOTECHINICAL INVESTIGATION"
   13115 UVAS ROAD
   MORGAN HILL, CA
   JOB# 21011
   DATE: 05–07–2021

THE CONTRACTOR SHALL REFER TO THE ABOVE NOTED SURVEY AND PLAN, AND SHALL VERIFY BOTH EXISTING AND PROPOSED ITEMS ACCORDING TO THEM.

* BUILDING PAD NOTE: ADJUST PAD LEVEL AS REQUIRED. REFER TO STRUCTURAL PLANS FOR SLAB SECTION OR CRAWL SPACE DEPTH TO ESTABLISH PAD LEVEL.

NOTE:
FOR CONSTRUCTION STAKING SCHEDULING OR QUOTATIONS PLEASE CONTACT ALEX ABAYA AT LEA & BRAZE ENGINEERING (510)887-4086 EXT 116. aabaya@leabraze.com

1-800-227-2600 CALL BEFORE YOU DIG USA UNDERGROUND SERVICE ALERT

REGISTERED PROFESSIONAL ENGINEER PETER CARLANO No. C79555 CIVIL STATE OF CALIFORNIA
ORIGINAL SIGNATURES IN BLUE INK

LEA & BRAZE ENGINEERING, INC.
CIVIL ENGINEERS | LAND SURVEYORS
MAIN OFFICE:
2495 INDUSTRIAL PKWY WEST
HAYWARD, CALIFORNIA 94545
(510) 887–4086
REGIONAL OFFICES:
ROSEVILLE
DUBLIN
SAN JOSE
WWW.LEABRAZE.COM

OCEGUERA RESIDENCE
13115 UVAS ROAD
MORGAN HILL, CALIFORNIA
SANTA CLARA COUNTY
APN: 756–19–021
756–19–017

LEGEND AND NOTES

REVISIONS	BY
–	–
–	–
–	–
–	–
–	–

JOB NO:	2211012
DATE:	06–15–21
SCALE:	1" = 50'
DESIGN BY:	RDD
CHECKED BY:	TB
SHEET NO:	C-1.1

02 OF 16 SHEETS

PLAN # ____ OF ____
SHEET

APPLICANT: DEE DEE OCEGUERA
ROAD NAME: UVAS ROAD
COUNTY FILE NO.: TBD

0 25 50 100

SCALE: 1" = 50'

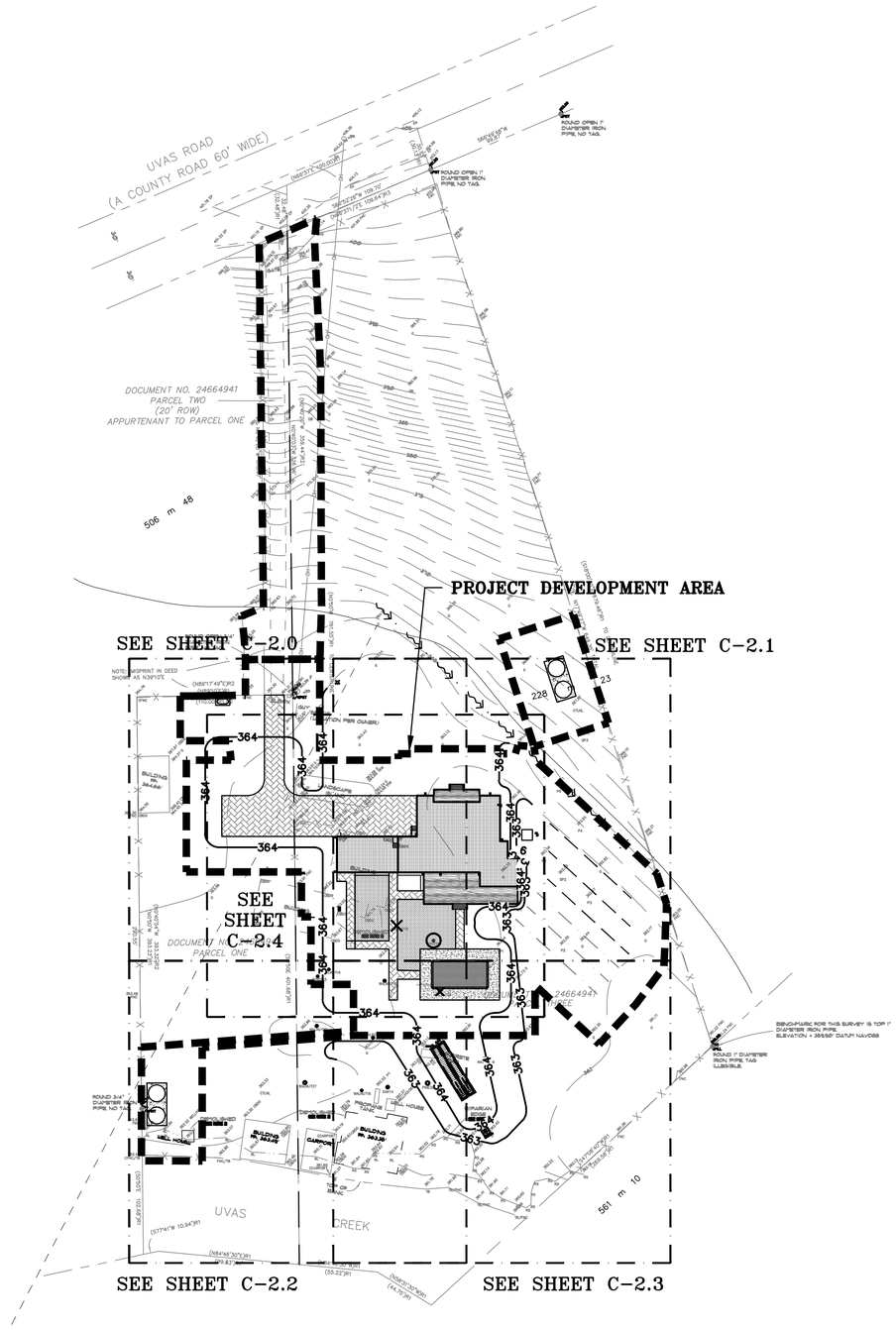

PROJECT DEVELOPMENT INFORMATION

DEVELOPED AREA SLOPE:	3.8%
PERMANENTLY DISTURBED AREA:	19,515 SF (0.45 ACRE)
IMPERVIOUS SURFACE COVERAGE:	15,870 SF (0.36 ACRE)
PROPOSED DEVELOPED AREA:	75,649 SF (1.74 ACRE)

S=(I*L/A)100
INTERVAL = 1
TOTAL CONTOUR LENGTH = 2,882 FT
PROPOSED DEVELOPED AREA = 75,649 SF

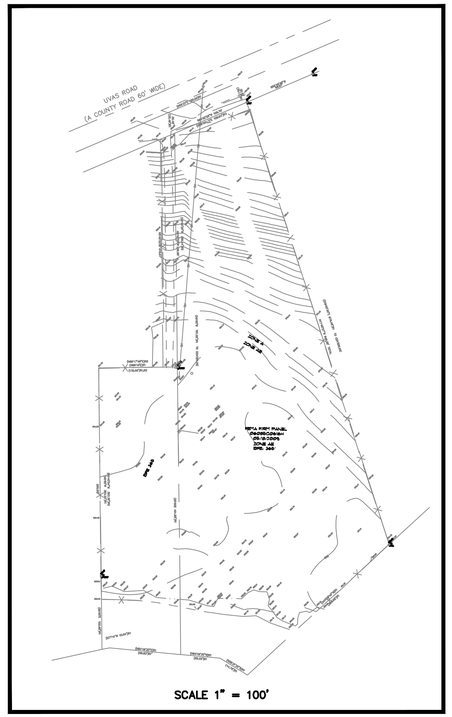

ESTIMATED EARTHWORKS QUANTITIES

CUT		
CUT (SITE GRADING / DRIVEWAY)	272	CY
CUT (WITHIN BUILDING FOOTPRINT)	451	CY
CUT TOTAL OVERALL VOLUME	723	CY
FILL		
FILL (SITE GRADING / DRIVEWAY)	949	CY
FILL (WITHIN BUILDING FOOTPRINT)	0	CY
FILL TOTAL OVERALL VOLUME	949	CY
	226	CY

NOTE: GRADING QUANTITIES REPRESENT BANK YARDAGE. IT DOES NOT INCLUDE ANY SWELLING OR SHRINKAGE FACTORS AND IS INTENDED TO REPRESENT IN-SITU CONDITIONS. QUANTITIES DO NOT INCLUDE OVER-EXCAVATION, TRENCHING, STRUCTURAL FOUNDATIONS OR PIERS, OR POOL EXCAVATION (IF ANY). NOTE ADDITIONAL EARTHWORKS, SUCH AS KEYWAYS OR BENCHING MAY BE REQUIRED BY THE GEOTECHNICAL ENGINEER IN THE FIELD AT TIME OF CONSTRUCTION. CONTRACTOR TO VERIFY QUANTITIES

**EASEMENT NOTE: EASEMENTS SHOWN ARE FOR REFERENCE ONLY PLEASE REFER TO TOPOGRAPHIC SURVEY BY HOGAN LAND SERVICES AND TITLE REPORT FOR COMPLETE EASEMENT RECORDS.

NOTE:
FOR CONSTRUCTION STAKING SCHEDULING OR QUOTATIONS PLEASE CONTACT ALEX ABAYA AT LEA & BRAZE ENGINEERING (510)887-4086 EXT 116. aabaya@leabraze.com

*** BUILDING PAD NOTE:** ADJUST PAD LEVEL AS REQUIRED. REFER TO STRUCTURAL PLANS FOR SLAB SECTION OR CRAWL SPACE DEPTH TO ESTABLISH PAD LEVEL.

REGISTERED PROFESSIONAL ENGINEER
PETER CARLINO
No. C79555
CIVIL
STATE OF CALIFORNIA
ORIGINAL SIGNATURES IN BLUE INK

LEA & BRAZE ENGINEERING, INC.
CIVIL ENGINEERS | LAND SURVEYORS
MAIN OFFICE:
2495 INDUSTRIAL PKWY WEST
HAYWARD, CALIFORNIA 94545
(510) 887-4086
REGIONAL OFFICES:
ROSEVILLE
DUBLIN
SAN JOSE
WWW.LEABRAZE.COM

OCEGUERA RESIDENCE
13115 UVAS ROAD
MORGAN HILL, CALIFORNIA
SANTA CLARA COUNTY
APN: 756-19-021
756-19-017

OVERALL SITE PLAN

REVISIONS	BY
–	–
–	–
–	–
–	–
–	–

JOB NO:	2211012
DATE:	06-15-21
SCALE:	1" = 40'
DESIGN BY:	RDD
CHECKED BY:	TB
SHEET NO:	C-1.2

03 OF 16 SHEETS

PLAN # ____ OF ____
SHEET

APPLICANT: DEE DEE OCEGUERA
ROAD NAME: UVAS ROAD
COUNTY FILE NO.: TBD

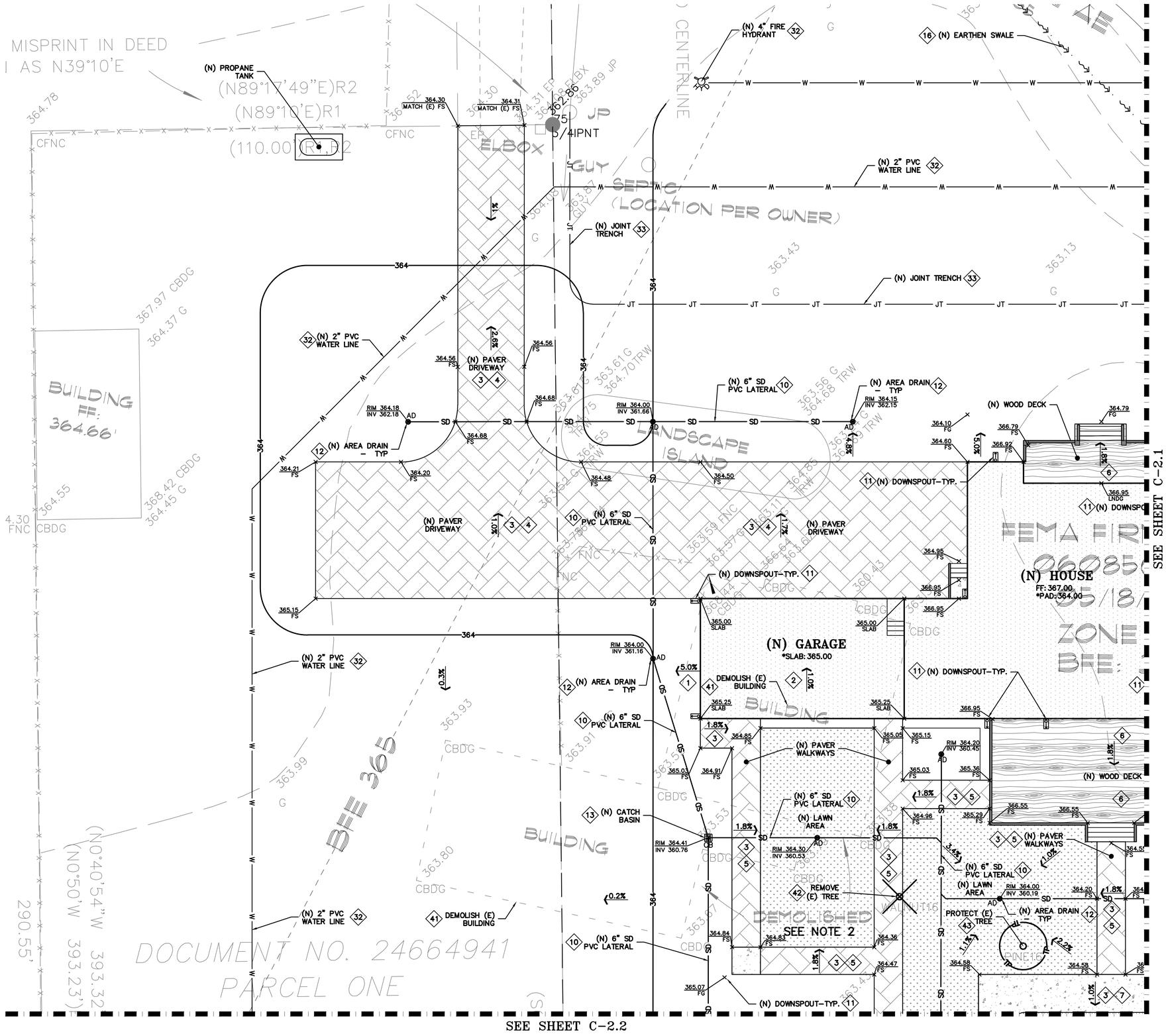

0 5 10 20

SCALE: 1" = 10'

FLATWORK KEYNOTES 1 TO 7

1. FINISHED GRADES AT BUILDING PERIMETER SHALL BE SLOPED AT A MINIMUM OF 5% FOR THE FIRST 10' AWAY FROM THE BUILDING PER CBC 1804.4 OR TO AN APPROVED DRAINAGE SWALE OR STRUCTURE. GRADES SHALL CONTINUE TO SLOPE TOWARDS POSITIVE DRAINAGE AND A POSITIVE OUTFALL. MAINTAIN 8" CLEARANCE BETWEEN FINISH EARTHEN GRADE AND BOTTOM OF MUD SILL AT ALL TIMES PER CBC 2304.12.1.2 UNLESS STRUCTURAL DETAILING ALLOWS LESS. REFER TO STRUCTURAL PLANS FOR FOUNDATION DESIGN AND DETAILS.
2. SLOPE GARAGE SLAB 1% MINIMUM (1/8" PER FOOT) FROM BACK TO FRONT TO ALLOW FOR ADEQUATE DRAINAGE. MAINTAIN 1/2" TO 1" LIP BETWEEN GARAGE SLAB AND DRIVEWAY. SEE PLANS FOR SPECIFIC DROP
3. PROVIDE 2% SLOPE ACROSS FLAT WORK AND/OR PAVING PER CBC 1804.4. SLOPE TOWARDS POSITIVE DRAINAGE AS SHOWN ON PLAN.
4. INSTALL (N) CONCRETE PAVER DRIVEWAY. SEE DETAIL 2 ON SHEET C-5.0.
5. INSTALL (N) PAVER WALKWAYS. SEE DETAIL 2 ON SHEET C-5.0.
6. INSTALL (N) WOOD DECK.
7. INSTALL (N) CONCRETE PATIO IN POOL AREA. SEE DETAIL 3 ON SHEET C-5.0.

DEMOLITION KEYNOTES 41 TO 43

41. DEMOLISH (E) IMPROVEMENTS AS NECESSARY TO ACCOMMODATE (N) CONSTRUCTION. NO DEMOLITION SHALL COMMENCE WITHOUT REQUIRED DEMOLITION PERMITS.
42. REMOVE (E) TREE. CONTRACTOR SHALL OBTAIN THE PROPER TREE REMOVAL PERMITS AS REQUIRED.
43. PROVIDE TREE PROTECTION AROUND TREES TO REMAIN. SEE DETAIL 6 ON SHEET ER-2.

STORM DRAIN KEYNOTES 10 TO 17

10. INSTALL (N) ON-SITE STORM DRAIN SYSTEM. USE MINIMUM 6" PVC (SDR 35) OR HDPE (ADS N-12 W/ SMOOTH INTERIOR WALLS). MAINTAIN 24" MINIMUM COVER AND SLOPED AT 1% MINIMUM AT ALL TIMES UNLESS OTHERWISE NOTED. PROVIDE CLEANOUT TO GRADE AT MAJOR CHANGES IN DIRECTION. AVOID USING 90° BENDS AND INSTEAD USE (2) 45° BENDS AND WYE CONNECTIONS.
11. DIRECT DOWNSPOUTS TO 24" LONG PRECAST CONCRETE SPLASHBLOCKS OR OTHER HARD SURFACE. DIRECT AWAY FROM ANY STRUCTURE AND TOWARDS POSITIVE DRAINAGE. SEE DETAIL 1 ON SHEET C-5.0.
12. INSTALL (N) 4" DIAMETER HEAVY DUTY PLASTIC BLACK GRATE IN LANDSCAPE OR PLANTER AREAS (NDS PART 78 OR 90 FOR 6" DIAMETER HEAVY DUTY PLASTIC BLACK GRATE). SEE DETAIL 5 ON SHEET C-5.0.
13. INSTALL (N) "CHRISTY V-12" CATCH BASIN W/ CONCRETE BOTTOM FLUSH W/ LOWEST OUTGOING INVERT. PLACE BOX ON 6" CLASS 2 AGGREGATE BASE MATERIAL. SEE DETAIL 8 ON SHEET C-5.0.
14. TRENCH DRAINS SHALL BE 6" NDS "DURA-SLOPE" PRESLOPED TRENCH DRAINS W/ TRAFFIC RATED GRATE OR APPROVED EQUAL. CONNECT TO NEAREST STORM DRAIN LINE VIA 4" PVC TIGHTLINE.
15. INSTALL (N) RETENTION SYSTEM. SEE DETAIL 1 ON SHEET C-5.1.
16. CONSTRUCT (N) EARTHEN SWALE SLOPED AT 1% MINIMUM TOWARDS POSITIVE OUTFALL. SEE DETAIL 7 ON SHEET C-5.0.
17. INSTALL (N) BUBBLER OUTFALL WITH RIP-RAP PROTECTION. SEE DETAIL 2 ON SHEET C-4.1.

UTILITIES KEYNOTES 31 TO 33

31. SEWER LATERAL, SEPTIC TANK, AND LEACH FIELD. DESIGN BY OTHERS.
32. CONNECT (N) WATER AND FIRE SERVICE TO WELLS PER WATER DISTRICT STANDARDS.
33. INSTALL (N) JOINT TRENCH FOR SERVICES INCLUDING GAS, CATV & ELECTRIC FROM NEAREST POINT OF CONNECTION. DESIGN BY OTHERS.

NOTE:
FOR CONSTRUCTION STAKING SCHEDULING OR QUOTATIONS PLEASE CONTACT ALEX ABAYA AT LEA & BRAZE ENGINEERING (510)887-4086 EXT 116. aabaya@leabraze.com

*** BUILDING PAD NOTE:** ADJUST PAD LEVEL AS REQUIRED. REFER TO STRUCTURAL PLANS FOR SLAB SECTION OR CRAWL SPACE DEPTH TO ESTABLISH PAD LEVEL.

**EASEMENT NOTE: EASEMENTS SHOWN ARE FOR REFERENCE ONLY PLEASE REFER TO TOPOGRAPHIC SURVEY BY HOGAN LAND SERVICES AND TITLE REPORT FOR COMPLETE EASEMENT RECORDS.

REGISTERED PROFESSIONAL ENGINEER
PETER CARLANO
No. C79555
CIVIL
STATE OF CALIFORNIA
ORIGINAL SIGNATURES IN BLUE INK

LEA & BRAZE ENGINEERING, INC.
CIVIL ENGINEERS | LAND SURVEYORS
MAIN OFFICE: 2495 INDUSTRIAL PKWY WEST HAYWARD, CALIFORNIA 94545 (510) 887-4086
REGIONAL OFFICES: ROSEVILLE DUBLIN SAN JOSE
WWW.LEABRAZE.COM

OCEGUERA RESIDENCE
13115 UVAS ROAD
MORGAN HILL, CALIFORNIA

APN: 756-19-021, 756-19-017
SANTA CLARA COUNTY

GRADING & DRAINAGE PLAN

REVISIONS	BY
–	–
–	–
–	–
–	–
–	–

JOB NO:	2211012
DATE:	06-15-21
SCALE:	1" = 10'
DESIGN BY:	RDD
CHECKED BY:	TB
SHEET NO:	C-2.0

04 OF 16 SHEETS

PLAN # ____ OF ____
SHEET

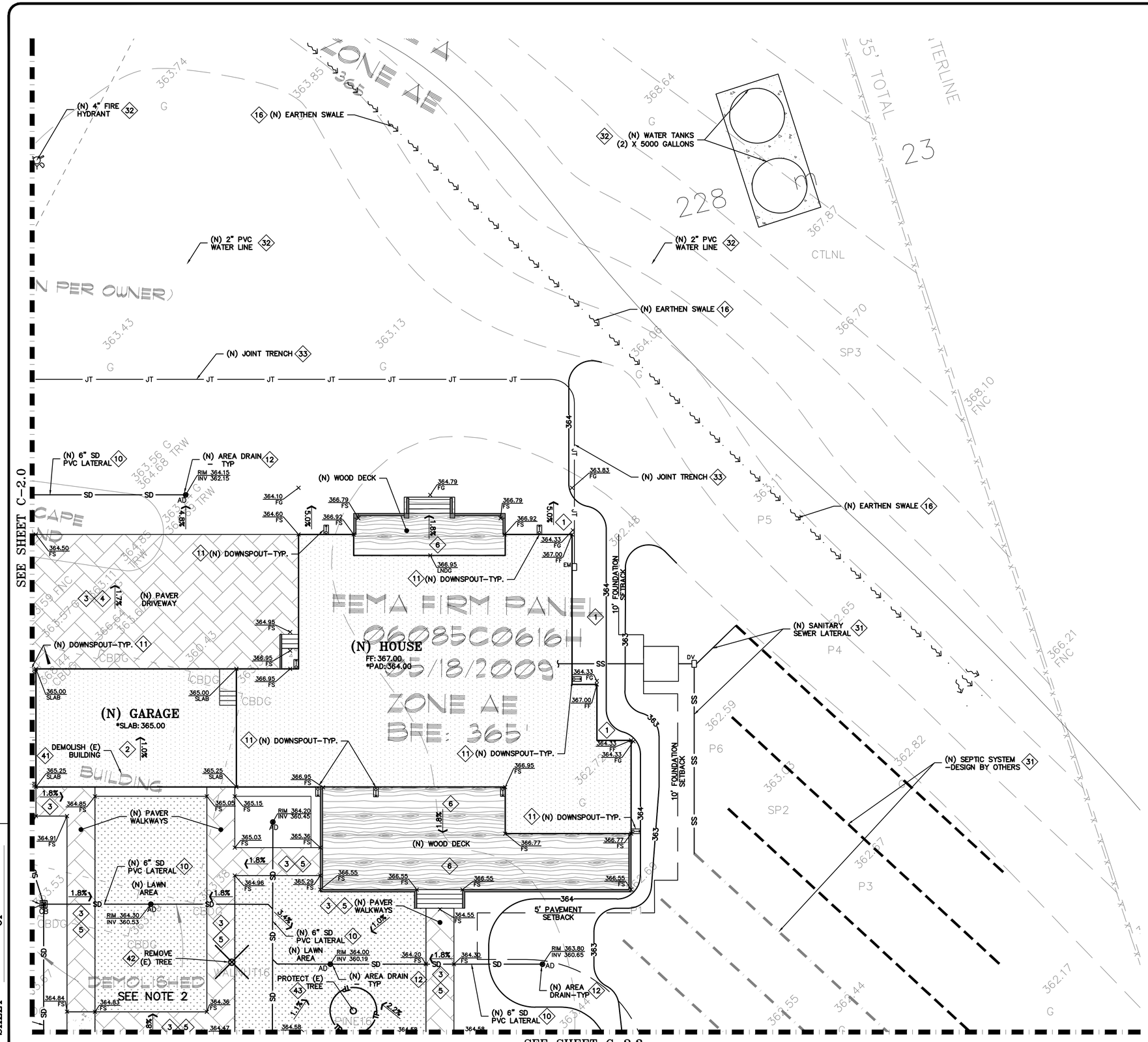

0 5 10 20

SCALE: 1" = 10'

FLATWORK KEYNOTES 1 TO 7

1. FINISHED GRADES AT BUILDING PERIMETER SHALL BE SLOPED AT A MINIMUM OF 5% FOR THE FIRST 10' AWAY FROM THE BUILDING PER CBC 1804.4 OR TO AN APPROVED DRAINAGE SWALE OR STRUCTURE. GRADES SHALL CONTINUE TO SLOPE TOWARDS POSITIVE DRAINAGE AND A POSITIVE OUTFALL. MAINTAIN 8" CLEARANCE BETWEEN FINISH EARTHEN GRADE AND BOTTOM OF MUD SILL AT ALL TIMES PER CBC 2304.12.1.2 UNLESS STRUCTURAL DETAILING ALLOWS LESS. REFER TO STRUCTURAL PLANS FOR FOUNDATION DESIGN AND DETAILS.
2. SLOPE GARAGE SLAB 1% MINIMUM (1/8" PER FOOT) FROM BACK TO FRONT TO ALLOW FOR ADEQUATE DRAINAGE. MAINTAIN 1/2" TO 1" LIP BETWEEN GARAGE SLAB AND DRIVEWAY. SEE PLANS FOR SPECIFIC DROP
3. PROVIDE 2% SLOPE ACROSS FLAT WORK AND/OR PAVING PER CBC 1804.4. SLOPE TOWARDS POSITIVE DRAINAGE AS SHOWN ON PLAN.
4. INSTALL (N) CONCRETE PAVER DRIVEWAY. SEE DETAIL 2 ON SHEET C-5.0.
5. INSTALL (N) PAVER WALKWAYS. SEE DETAIL 2 ON SHEET C-5.0.
6. INSTALL (N) WOOD DECK.
7. INSTALL (N) CONCRETE PATIO IN POOL AREA. SEE DETAIL 3 ON SHEET C-5.0.

DEMOLITION KEYNOTES 41 TO 43

41. DEMOLISH (E) IMPROVEMENTS AS NECESSARY TO ACCOMMODATE (N) CONSTRUCTION. NO DEMOLITION SHALL COMMENCE WITHOUT REQUIRED DEMOLITION PERMITS.
42. REMOVE (E) TREE. CONTRACTOR SHALL OBTAIN THE PROPER TREE REMOVAL PERMITS AS REQUIRED.
43. PROVIDE TREE PROTECTION AROUND TREES TO REMAIN. SEE DETAIL 6 ON SHEET ER-2.

STORM DRAIN KEYNOTES 10 TO 17

10. INSTALL (N) ON-SITE STORM DRAIN SYSTEM. USE MINIMUM 6" PVC (SDR 35) OR HDPE (ADS N-12 W/ SMOOTH INTERIOR WALLS). MAINTAIN 24" MINIMUM COVER AND SLOPED AT 1% MINIMUM AT ALL TIMES UNLESS OTHERWISE NOTED. PROVIDE CLEANOUT TO GRADE AT MAJOR CHANGES IN DIRECTION. AVOID USING 90° BENDS AND INSTEAD USE (2) 45° BENDS AND WYE CONNECTIONS.
11. DIRECT DOWNSPOUTS TO 24" LONG PRECAST CONCRETE SPLASHBLOCKS OR OTHER HARD SURFACE. DIRECT AWAY FROM ANY STRUCTURE AND TOWARDS POSITIVE DRAINAGE. SEE DETAIL 1 ON SHEET C-5.0.
12. INSTALL (N) 4" DIAMETER HEAVY DUTY PLASTIC BLACK GRATE IN LANDSCAPE OR PLANTER AREAS (NDS PART 78 OR 90 FOR 6" DIAMETER HEAVY DUTY PLASTIC BLACK GRATE). SEE DETAIL 5 ON SHEET C-5.0.
13. INSTALL (N) "CHRISTY V-12" CATCH BASIN W/ CONCRETE BOTTOM FLUSH W/ LOWEST OUTGOING INVERT. PLACE BOX ON 6" CLASS 2 AGGREGATE BASE MATERIAL. SEE DETAIL 8 ON SHEET C-5.0.
14. TRENCH DRAINS SHALL BE 6" NDS "DURA-SLOPE" PRESLOPED TRENCH DRAINS W/ TRAFFIC RATED GRATE OR APPROVED EQUAL. CONNECT TO NEAREST STORM DRAIN LINE VIA 4" PVC TIGHTLINE.
15. INSTALL (N) RETENTION SYSTEM. SEE DETAIL 1 ON SHEET C-5.1.
16. CONSTRUCT (N) EARTHEN SWALE SLOPED AT 1% MINIMUM TOWARDS POSITIVE OUTFALL. SEE DETAIL 7 ON SHEET C-5.0.
17. INSTALL (N) BUBBLER OUTFALL WITH RIP-RAP PROTECTION. SEE DETAIL 2 ON SHEET C-4.1.

UTILITIES KEYNOTES 31 TO 33

31. SEWER LATERAL, SEPTIC TANK, AND LEACH FIELD. DESIGN BY OTHERS.
32. CONNECT (N) WATER AND FIRE SERVICE TO WELLS PER WATER DISTRICT STANDARDS.
33. INSTALL (N) JOINT TRENCH FOR SERVICES INCLUDING GAS, CATV & ELECTRIC FROM NEAREST POINT OF CONNECTION. DESIGN BY OTHERS.

NOTE:
FOR CONSTRUCTION STAKING SCHEDULING OR QUOTATIONS PLEASE CONTACT ALEX ABAYA AT LEA & BRAZE ENGINEERING (510)887-4086 EXT 116. aabaya@leabraze.com

*** BUILDING PAD NOTE:** ADJUST PAD LEVEL AS REQUIRED. REFER TO STRUCTURAL PLANS FOR SLAB SECTION OR CRAWL SPACE DEPTH TO ESTABLISH PAD LEVEL.

****EASEMENT NOTE: EASEMENTS SHOWN ARE FOR REFERENCE ONLY PLEASE REFER TO TOPOGRAPHIC SURVEY BY HOGAN LAND SERVICES AND TITLE REPORT FOR COMPLETE EASEMENT RECORDS.**

REGISTERED PROFESSIONAL ENGINEER
PETER CARLINO
No. C79555
CIVIL
STATE OF CALIFORNIA
ORIGINAL SIGNATURES IN BLUE INK

LEA & BRAZE ENGINEERING, INC.
CIVIL ENGINEERS | LAND SURVEYORS
MAIN OFFICE:
2495 INDUSTRIAL PKWY WEST
HAYWARD, CALIFORNIA 94545
(510) 887-4086
REGIONAL OFFICES:
ROSEVILLE
DUBLIN
SAN JOSE
WWW.LEABRAZE.COM

OCEGUERA RESIDENCE
13115 UVAS ROAD
MORGAN HILL, CALIFORNIA
SANTA CLARA COUNTY
APN: 756-19-021
756-19-017

GRADING & DRAINAGE PLAN

REVISIONS	BY
-	-
-	-
-	-
-	-
-	-

JOB NO:	2211012
DATE:	06-15-21
SCALE:	1" = 10'
DESIGN BY:	RDD
CHECKED BY:	TB
SHEET NO:	C-2.1

05 OF 16 SHEETS

PLAN # ____ OF ____
SHEET

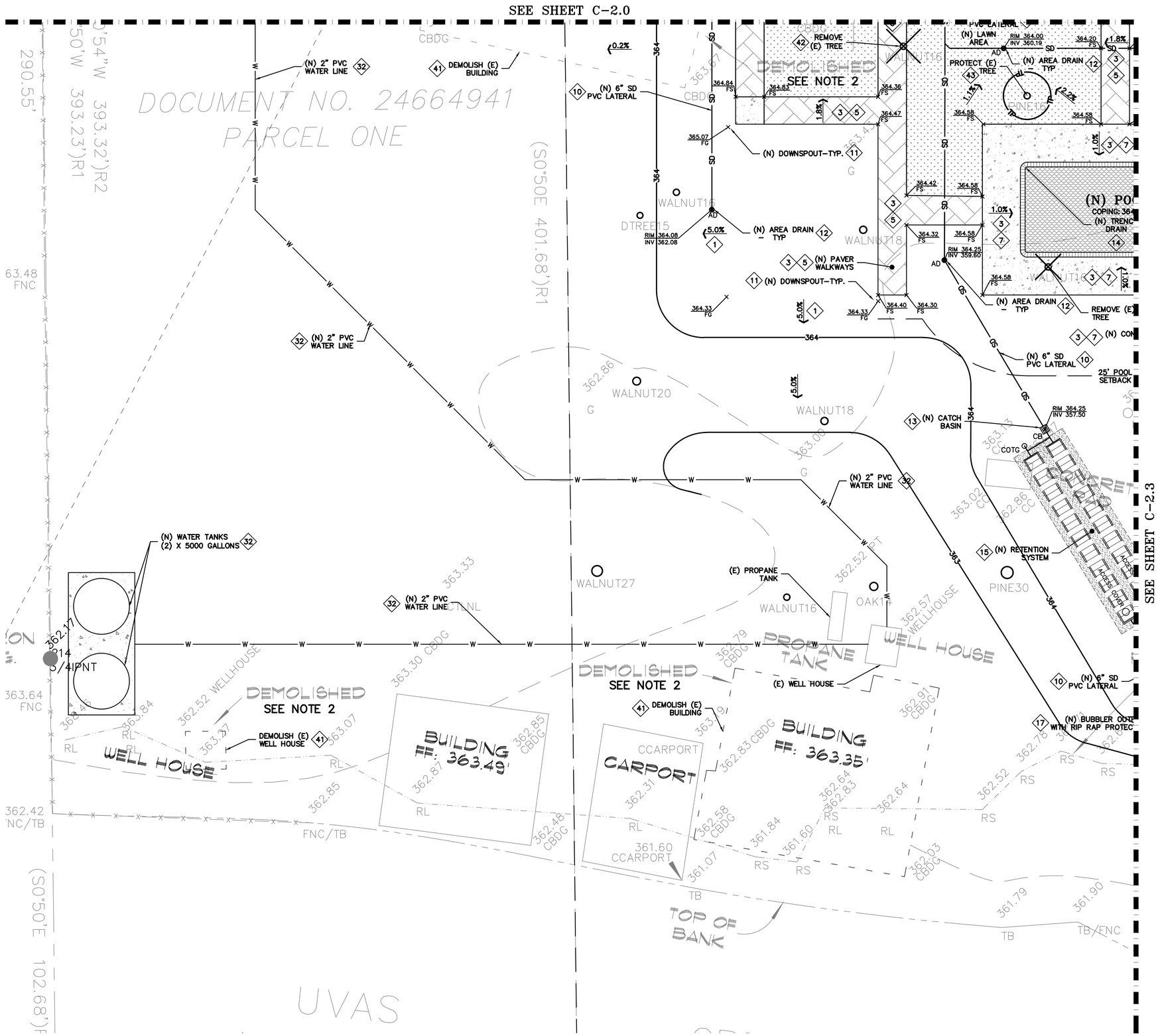

0 5 10 20

SCALE: 1" = 10'

FLATWORK KEYNOTES 1 TO 7

1. FINISHED GRADES AT BUILDING PERIMETER SHALL BE SLOPED AT A MINIMUM OF 5% FOR THE FIRST 10' AWAY FROM THE BUILDING PER CBC 1804.4 OR TO AN APPROVED DRAINAGE SWALE OR STRUCTURE. GRADES SHALL CONTINUE TO SLOPE TOWARDS POSITIVE DRAINAGE AND A POSITIVE OUTFALL. MAINTAIN 8" CLEARANCE BETWEEN FINISH EARTHEN GRADE AND BOTTOM OF MUD SILL AT ALL TIMES PER CBC 2304.12.1.2 UNLESS STRUCTURAL DETAILING ALLOWS LESS. REFER TO STRUCTURAL PLANS FOR FOUNDATION DESIGN AND DETAILS.
2. SLOPE GARAGE SLAB 1% MINIMUM (1/8" PER FOOT) FROM BACK TO FRONT TO ALLOW FOR ADEQUATE DRAINAGE. MAINTAIN 1/2" TO 1" LIP BETWEEN GARAGE SLAB AND DRIVEWAY. SEE PLANS FOR SPECIFIC DROP
3. PROVIDE 2% SLOPE ACROSS FLAT WORK AND/OR PAVING PER CBC 1804.4. SLOPE TOWARDS POSITIVE DRAINAGE AS SHOWN ON PLAN.
4. INSTALL (N) CONCRETE PAVER DRIVEWAY. SEE DETAIL 2 ON SHEET C-5.0.
5. INSTALL (N) PAVER WALKWAYS. SEE DETAIL 2 ON SHEET C-5.0.
6. INSTALL (N) WOOD DECK.
7. INSTALL (N) CONCRETE PATIO IN POOL AREA. SEE DETAIL 3 ON SHEET C-5.0.

DEMOLITION KEYNOTES 41 TO 43

41. DEMOLISH (E) IMPROVEMENTS AS NECESSARY TO ACCOMMODATE (N) CONSTRUCTION. NO DEMOLITION SHALL COMMENCE WITHOUT REQUIRED DEMOLITION PERMITS.
42. REMOVE (E) TREE. CONTRACTOR SHALL OBTAIN THE PROPER TREE REMOVAL PERMITS AS REQUIRED.
43. PROVIDE TREE PROTECTION AROUND TREES TO REMAIN. SEE DETAIL 6 ON SHEET ER-2.

STORM DRAIN KEYNOTES 10 TO 17

10. INSTALL (N) ON-SITE STORM DRAIN SYSTEM. USE MINIMUM 6" PVC (SDR 35) OR HDPE (ADS N-12 W/ SMOOTH INTERIOR WALLS). MAINTAIN 24" MINIMUM COVER AND SLOPED AT 1% MINIMUM AT ALL TIMES UNLESS OTHERWISE NOTED. PROVIDE CLEANOUT TO GRADE AT MAJOR CHANGES IN DIRECTION. AVOID USING 90° BENDS AND INSTEAD USE (2) 45° BENDS AND WYE CONNECTIONS.
11. DIRECT DOWNSPOUTS TO 24" LONG PRECAST CONCRETE SPLASHBLOCKS OR OTHER HARD SURFACE. DIRECT AWAY FROM ANY STRUCTURE AND TOWARDS POSITIVE DRAINAGE. SEE DETAIL 1 ON SHEET C-5.0.
12. INSTALL (N) 4" DIAMETER HEAVY DUTY PLASTIC BLACK GRATE IN LANDSCAPE OR PLANTER AREAS (NDS PART 78 OR 90 FOR 6" DIAMETER HEAVY DUTY PLASTIC BLACK GRATE). SEE DETAIL 5 ON SHEET C-5.0.
13. INSTALL (N) "CHRISTY V-12" CATCH BASIN W/ CONCRETE BOTTOM FLUSH W/ LOWEST OUTGOING INVERT. PLACE BOX ON 6" CLASS 2 AGGREGATE BASE MATERIAL. SEE DETAIL 8 ON SHEET C-5.0.
14. TRENCH DRAINS SHALL BE 6" NDS "DURA-SLOPE" PRESLOPED TRENCH DRAINS W/ TRAFFIC RATED GRATE OR APPROVED EQUAL. CONNECT TO NEAREST STORM DRAIN LINE VIA 4" PVC TIGHTLINE.
15. INSTALL (N) RETENTION SYSTEM. SEE DETAIL 1 ON SHEET C-5.1.
16. CONSTRUCT (N) EARTHEN SWALE SLOPED AT 1% MINIMUM TOWARDS POSITIVE OUTFALL. SEE DETAIL 7 ON SHEET C-5.0.
17. INSTALL (N) BUBBLER OUTFALL WITH RIP-RAP PROTECTION. SEE DETAIL 2 ON SHEET C-4.1.

UTILITIES KEYNOTES 31 TO 33

31. SEWER LATERAL, SEPTIC TANK, AND LEACH FIELD. DESIGN BY OTHERS.
32. CONNECT (N) WATER AND FIRE SERVICE TO WELLS PER WATER DISTRICT STANDARDS.
33. INSTALL (N) JOINT TRENCH FOR SERVICES INCLUDING GAS, CATV & ELECTRIC FROM NEAREST POINT OF CONNECTION. DESIGN BY OTHERS.

NOTE:
FOR CONSTRUCTION STAKING SCHEDULING OR QUOTATIONS PLEASE CONTACT ALEX ABAYA AT LEA & BRAZE ENGINEERING (510)887-4086 EXT 116. aabaya@leabraze.com

*** BUILDING PAD NOTE:** ADJUST PAD LEVEL AS REQUIRED. REFER TO STRUCTURAL PLANS FOR SLAB SECTION OR CRAWL SPACE DEPTH TO ESTABLISH PAD LEVEL.

**EASEMENT NOTE: EASEMENTS SHOWN ARE FOR REFERENCE ONLY PLEASE REFER TO TOPOGRAPHIC SURVEY BY HOGAN LAND SERVICES AND TITLE REPORT FOR COMPLETE EASEMENT RECORDS.

REGISTERED PROFESSIONAL ENGINEER PETER CARLANO No. C79555 CIVIL STATE OF CALIFORNIA ORIGINAL SIGNATURES IN BLUE INK

LEA & BRAZE ENGINEERING, INC.
CIVIL ENGINEERS | LAND SURVEYORS
MAIN OFFICE: 2495 INDUSTRIAL PKWY WEST HAYWARD, CALIFORNIA 94545 (510) 887-4086
REGIONAL OFFICES: ROSEVILLE DUBLIN SAN JOSE
WWW.LEABRAZE.COM

OCEGUERA RESIDENCE
13115 UVAS ROAD
MORGAN HILL, CALIFORNIA

SANTA CLARA COUNTY APN: 756-19-021 756-19-017

GRADING & DRAINAGE PLAN

REVISIONS	BY
–	–
–	–
–	–
–	–
–	–

JOB NO:	2211012
DATE:	06-15-21
SCALE:	1" = 10'
DESIGN BY:	RDD
CHECKED BY:	TB
SHEET NO:	C-2.2

06 OF 16 SHEETS

PLAN # ____ OF ____
SHEET

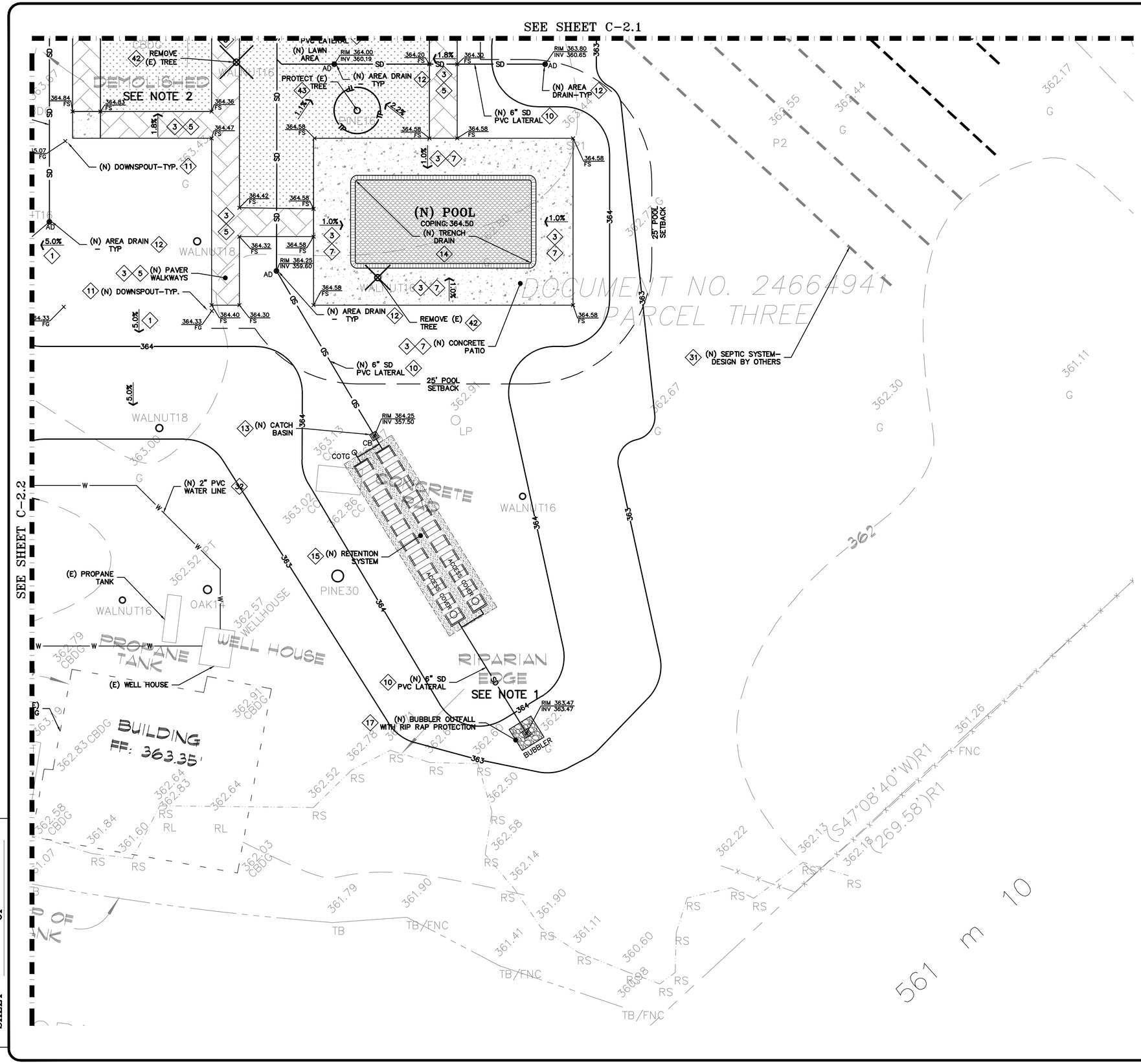

SCALE: 1" = 10'

FLATWORK KEYNOTES 1 TO 7

1. FINISHED GRADES AT BUILDING PERIMETER SHALL BE SLOPED AT A MINIMUM OF 5% FOR THE FIRST 10' AWAY FROM THE BUILDING PER CBC 1804.4 OR TO AN APPROVED DRAINAGE SWALE OR STRUCTURE. GRADES SHALL CONTINUE TO SLOPE TOWARDS POSITIVE DRAINAGE AND A POSITIVE OUTFALL. MAINTAIN 8" CLEARANCE BETWEEN FINISH EARTHEN GRADE AND BOTTOM OF MUD SILL AT ALL TIMES PER CBC 2304.12.1.2 UNLESS STRUCTURAL DETAILING ALLOWS LESS. REFER TO STRUCTURAL PLANS FOR FOUNDATION DESIGN AND DETAILS.
2. SLOPE GARAGE SLAB 1% MINIMUM (1/8" PER FOOT) FROM BACK TO FRONT TO ALLOW FOR ADEQUATE DRAINAGE. MAINTAIN 1/2" TO 1" LIP BETWEEN GARAGE SLAB AND DRIVEWAY. SEE PLANS FOR SPECIFIC DROP
3. PROVIDE 2% SLOPE ACROSS FLAT WORK AND/OR PAVING PER CBC 1804.4. SLOPE TOWARDS POSITIVE DRAINAGE AS SHOWN ON PLAN.
4. INSTALL (N) CONCRETE PAVER DRIVEWAY. SEE DETAIL 2 ON SHEET C-5.0.
5. INSTALL (N) PAVER WALKWAYS. SEE DETAIL 2 ON SHEET C-5.0.
6. INSTALL (N) WOOD DECK.
7. INSTALL (N) CONCRETE PATIO IN POOL AREA. SEE DETAIL 3 ON SHEET C-5.0.

DEMOLITION KEYNOTES 41 TO 43

41. DEMOLISH (E) IMPROVEMENTS AS NECESSARY TO ACCOMMODATE (N) CONSTRUCTION. NO DEMOLITION SHALL COMMENCE WITHOUT REQUIRED DEMOLITION PERMITS.
42. REMOVE (E) TREE. CONTRACTOR SHALL OBTAIN THE PROPER TREE REMOVAL PERMITS AS REQUIRED.
43. PROVIDE TREE PROTECTION AROUND TREES TO REMAIN. SEE DETAIL 6 ON SHEET ER-2.

STORM DRAIN KEYNOTES 10 TO 17

10. INSTALL (N) ON-SITE STORM DRAIN SYSTEM. USE MINIMUM 6" PVC (SDR 35) OR HDPE (ADS N-12 W/ SMOOTH INTERIOR WALLS). MAINTAIN 24" MINIMUM COVER AND SLOPED AT 1% MINIMUM AT ALL TIMES UNLESS OTHERWISE NOTED. PROVIDE CLEANOUT TO GRADE AT MAJOR CHANGES IN DIRECTION. AVOID USING 90° BENDS AND INSTEAD USE (2) 45° BENDS AND WYE CONNECTIONS.
11. DIRECT DOWNSPOUTS TO 24" LONG PRECAST CONCRETE SPLASHBLOCKS OR OTHER HARD SURFACE. DIRECT AWAY FROM ANY STRUCTURE AND TOWARDS POSITIVE DRAINAGE. SEE DETAIL 1 ON SHEET C-5.0.
12. INSTALL (N) 4" DIAMETER HEAVY DUTY PLASTIC BLACK GRATE IN LANDSCAPE OR PLANTER AREAS (NDS PART 78 OR 90 FOR 6" DIAMETER HEAVY DUTY PLASTIC BLACK GRATE). SEE DETAIL 5 ON SHEET C-5.0.
13. INSTALL (N) "CHRISTY V-12" CATCH BASIN W/ CONCRETE BOTTOM FLUSH W/ LOWEST OUTGOING INVERT. PLACE BOX ON 6" CLASS 2 AGGREGATE BASE MATERIAL. SEE DETAIL 8 ON SHEET C-5.0.
14. TRENCH DRAINS SHALL BE 6" NDS "DURA-SLOPE" PRESLOPED TRENCH DRAINS W/ TRAFFIC RATED GRATE OR APPROVED EQUAL. CONNECT TO NEAREST STORM DRAIN LINE VIA 4" PVC TIGHTLINE.
15. INSTALL (N) RETENTION SYSTEM. SEE DETAIL 1 ON SHEET C-5.1.
16. CONSTRUCT (N) EARTHEN SWALE SLOPED AT 1% MINIMUM TOWARDS POSITIVE OUTFALL. SEE DETAIL 7 ON SHEET C-5.0.
17. INSTALL (N) BUBBLER OUTFALL WITH RIP-RAP PROTECTION. SEE DETAIL 2 ON SHEET C-4.1.

UTILITIES KEYNOTES 31 TO 33

31. SEWER LATERAL, SEPTIC TANK, AND LEACH FIELD. DESIGN BY OTHERS.
32. CONNECT (N) WATER AND FIRE SERVICE TO WELLS PER WATER DISTRICT STANDARDS.
33. INSTALL (N) JOINT TRENCH FOR SERVICES INCLUDING GAS, CATV & ELECTRIC FROM NEAREST POINT OF CONNECTION. DESIGN BY OTHERS.

NOTE:
FOR CONSTRUCTION STAKING SCHEDULING OR QUOTATIONS PLEASE CONTACT ALEX ABAYA AT LEA & BRAZE ENGINEERING (510)887-4086 EXT 116. aabaya@leabraze.com

*** BUILDING PAD NOTE:** ADJUST PAD LEVEL AS REQUIRED. REFER TO STRUCTURAL PLANS FOR SLAB SECTION OR CRAWL SPACE DEPTH TO ESTABLISH PAD LEVEL.

****EASEMENT NOTE: EASEMENTS SHOWN ARE FOR REFERENCE ONLY PLEASE REFER TO TOPOGRAPHIC SURVEY BY HOGAN LAND SERVICES AND TITLE REPORT FOR COMPLETE EASEMENT RECORDS.**

REGISTERED PROFESSIONAL ENGINEER PETER CARLANO No. C79555 CIVIL STATE OF CALIFORNIA ORIGINAL SIGNATURES IN BLUE INK

LEA & BRAZE ENGINEERING, INC.
CIVIL ENGINEERS | LAND SURVEYORS
MAIN OFFICE: 2495 INDUSTRIAL PKWY WEST HAYWARD, CALIFORNIA 94545 (510) 887-4086
REGIONAL OFFICES: ROSEVILLE DUBLIN SAN JOSE
WWW.LEABRAZE.COM

OCEGUERA RESIDENCE
13115 UVAS ROAD
MORGAN HILL, CALIFORNIA

APN: 756-19-021, 756-19-017
SANTA CLARA COUNTY

GRADING & DRAINAGE PLAN

REVISIONS	BY
–	–
–	–
–	–
–	–
–	–

JOB NO:	2211012
DATE:	06-15-21
SCALE:	1" = 10'
DESIGN BY:	RDD
CHECKED BY:	TB
SHEET NO:	C-2.3

07 OF 16 SHEETS

PLAN # ____ OF ____
SHEET

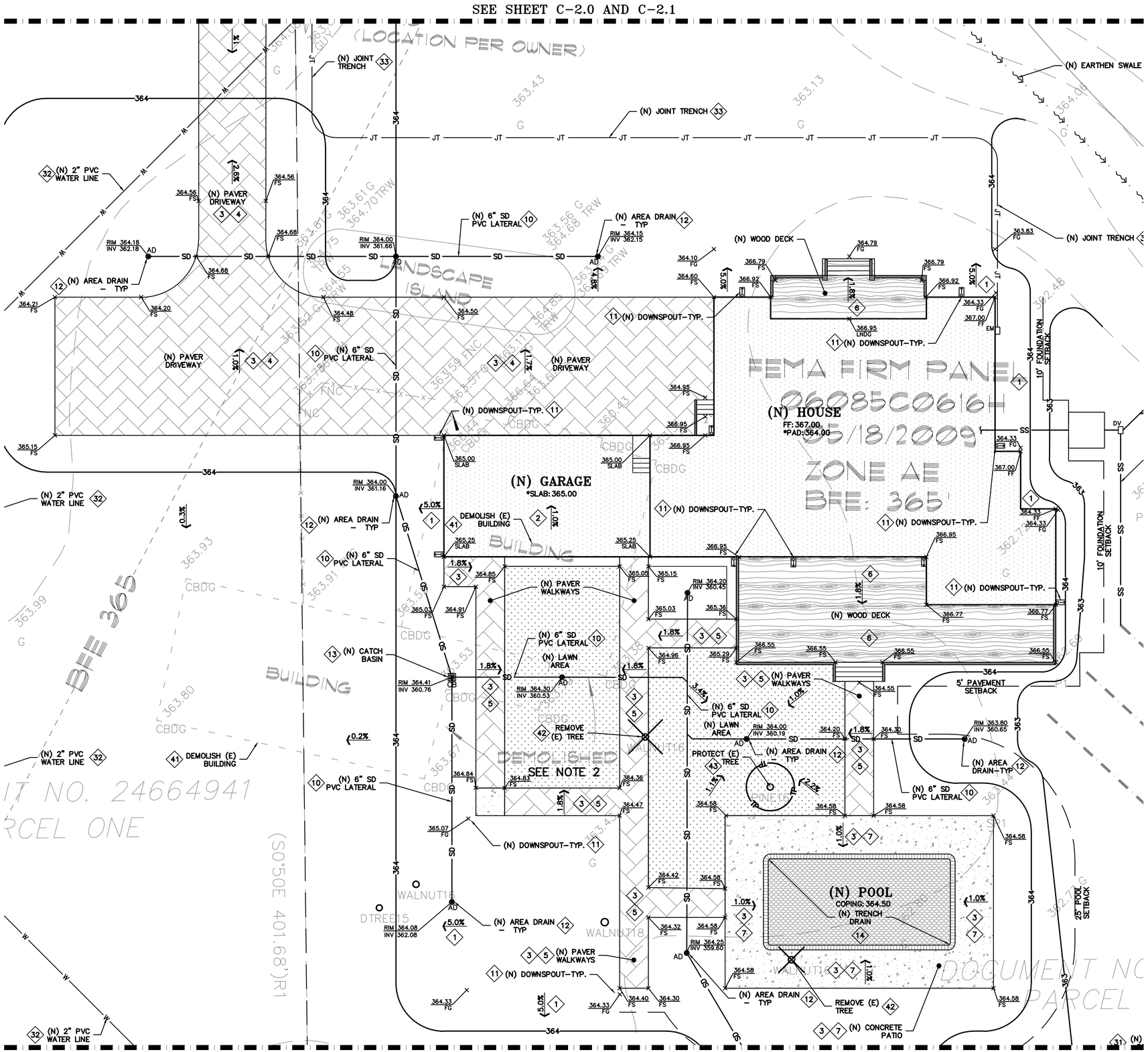

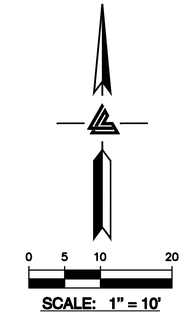

FLATWORK KEYNOTES 1 TO 7

1. FINISHED GRADES AT BUILDING PERIMETER SHALL BE SLOPED AT A MINIMUM OF 5% FOR THE FIRST 10' AWAY FROM THE BUILDING PER CBC 1804.4 OR TO AN APPROVED DRAINAGE SWALE OR STRUCTURE. GRADES SHALL CONTINUE TO SLOPE TOWARDS POSITIVE DRAINAGE AND A POSITIVE OUTFALL. MAINTAIN 8" CLEARANCE BETWEEN FINISH EARTHEN GRADE AND BOTTOM OF MUD SILL AT ALL TIMES PER CBC 2304.12.1.2 UNLESS STRUCTURAL DETAILING ALLOWS LESS. REFER TO STRUCTURAL PLANS FOR FOUNDATION DESIGN AND DETAILS.
2. SLOPE GARAGE SLAB 1% MINIMUM (1/8" PER FOOT) FROM BACK TO FRONT TO ALLOW FOR ADEQUATE DRAINAGE. MAINTAIN 1/2" TO 1" LIP BETWEEN GARAGE SLAB AND DRIVEWAY. SEE PLANS FOR SPECIFIC DROP
3. PROVIDE 2% SLOPE ACROSS FLAT WORK AND/OR PAVING PER CBC 1804.4. SLOPE TOWARDS POSITIVE DRAINAGE AS SHOWN ON PLAN.
4. INSTALL (N) CONCRETE PAVER DRIVEWAY. SEE DETAIL 2 ON SHEET C-5.0.
5. INSTALL (N) PAVER WALKWAYS. SEE DETAIL 2 ON SHEET C-5.0.
6. INSTALL (N) WOOD DECK.
7. INSTALL (N) CONCRETE PATIO IN POOL AREA. SEE DETAIL 3 ON SHEET C-5.0.

DEMOLITION KEYNOTES 41 TO 43

41. DEMOLISH (E) IMPROVEMENTS AS NECESSARY TO ACCOMMODATE (N) CONSTRUCTION. NO DEMOLITION SHALL COMMENCE WITHOUT REQUIRED DEMOLITION PERMITS.
42. REMOVE (E) TREE. CONTRACTOR SHALL OBTAIN THE PROPER TREE REMOVAL PERMITS AS REQUIRED.
43. PROVIDE TREE PROTECTION AROUND TREES TO REMAIN. SEE DETAIL 6 ON SHEET ER-2.

STORM DRAIN KEYNOTES 10 TO 17

10. INSTALL (N) ON-SITE STORM DRAIN SYSTEM. USE MINIMUM 6" PVC (SDR 35) OR HDPE (ADS N-12 W/ SMOOTH INTERIOR WALLS). MAINTAIN 24" MINIMUM COVER AND SLOPED AT 1% MINIMUM AT ALL TIMES UNLESS OTHERWISE NOTED. PROVIDE CLEANOUT TO GRADE AT MAJOR CHANGES IN DIRECTION. AVOID USING 90° BENDS AND INSTEAD USE (2) 45° BENDS AND WYE CONNECTIONS.
11. DIRECT DOWNSPOUTS TO 24" LONG PRECAST CONCRETE SPLASHBLOCKS OR OTHER HARD SURFACE. DIRECT AWAY FROM ANY STRUCTURE AND TOWARDS POSITIVE DRAINAGE. SEE DETAIL 1 ON SHEET C-5.0.
12. INSTALL (N) 4" DIAMETER HEAVY DUTY PLASTIC BLACK GRATE IN LANDSCAPE OR PLANTER AREAS (NDS PART 78 OR 90 FOR 6" DIAMETER HEAVY DUTY PLASTIC BLACK GRATE). SEE DETAIL 5 ON SHEET C-5.0.
13. INSTALL (N) "CHRISTY V-12" CATCH BASIN W/ CONCRETE BOTTOM FLUSH W/ LOWEST OUTGOING INVERT. PLACE BOX ON 6" CLASS 2 AGGREGATE BASE MATERIAL. SEE DETAIL 8 ON SHEET C-5.0.
14. TRENCH DRAINS SHALL BE 6" NDS "DURA-SLOPE" PRESLOPED TRENCH DRAINS W/ TRAFFIC RATED GRATE OR APPROVED EQUAL. CONNECT TO NEAREST STORM DRAIN LINE VIA 4" PVC TIGHTLINE.
15. INSTALL (N) RETENTION SYSTEM. SEE DETAIL 1 ON SHEET C-5.1.
16. CONSTRUCT (N) EARTHEN SWALE SLOPED AT 1% MINIMUM TOWARDS POSITIVE OUTFALL. SEE DETAIL 7 ON SHEET C-5.0.
17. INSTALL (N) BUBBLER OUTFALL WITH RIP-RAP PROTECTION. SEE DETAIL 2 ON SHEET C-4.1.

UTILITIES KEYNOTES 31 TO 33

31. SEWER LATERAL, SEPTIC TANK, AND LEACH FIELD. DESIGN BY OTHERS.
32. CONNECT (N) WATER AND FIRE SERVICE TO WELLS PER WATER DISTRICT STANDARDS.
33. INSTALL (N) JOINT TRENCH FOR SERVICES INCLUDING GAS, CATV & ELECTRIC FROM NEAREST POINT OF CONNECTION. DESIGN BY OTHERS.

NOTE:
FOR CONSTRUCTION STAKING SCHEDULING OR QUOTATIONS PLEASE CONTACT ALEX ABAYA AT LEA & BRAZE ENGINEERING (510)887-4086 EXT 116. aabaya@leabraze.com

*** BUILDING PAD NOTE:** ADJUST PAD LEVEL AS REQUIRED. REFER TO STRUCTURAL PLANS FOR SLAB SECTION OR CRAWL SPACE DEPTH TO ESTABLISH PAD LEVEL.

****EASEMENT NOTE: EASEMENTS SHOWN ARE FOR REFERENCE ONLY PLEASE REFER TO TOPOGRAPHIC SURVEY BY HOGAN LAND SERVICES AND TITLE REPORT FOR COMPLETE EASEMENT RECORDS.**

REGISTERED PROFESSIONAL ENGINEER
PETER CARLANO
No. C79555
CIVIL
STATE OF CALIFORNIA
ORIGINAL SIGNATURES IN BLUE INK

LEA & BRAZE ENGINEERING, INC.
CIVIL ENGINEERS | LAND SURVEYORS
MAIN OFFICE:
2495 INDUSTRIAL PKWY WEST
HAYWARD, CALIFORNIA 94545
(510) 887-4086
REGIONAL OFFICES:
ROSEVILLE
DUBLIN
SAN JOSE
WWW.LEABRAZE.COM

OCEGUERA RESIDENCE
13115 UVAS ROAD
MORGAN HILL, CALIFORNIA

APN: 756-19-021
756-19-017

SANTA CLARA COUNTY

GRADING & DRAINAGE PLAN

REVISIONS	BY
–	–
–	–
–	–
–	–
–	–

JOB NO:	2211012
DATE:	06-15-21
SCALE:	1" = 10'
DESIGN BY:	RDD
CHECKED BY:	TB
SHEET NO:	C-2.4

08 OF 16 SHEETS

PLAN # ____ OF ____
SHEET

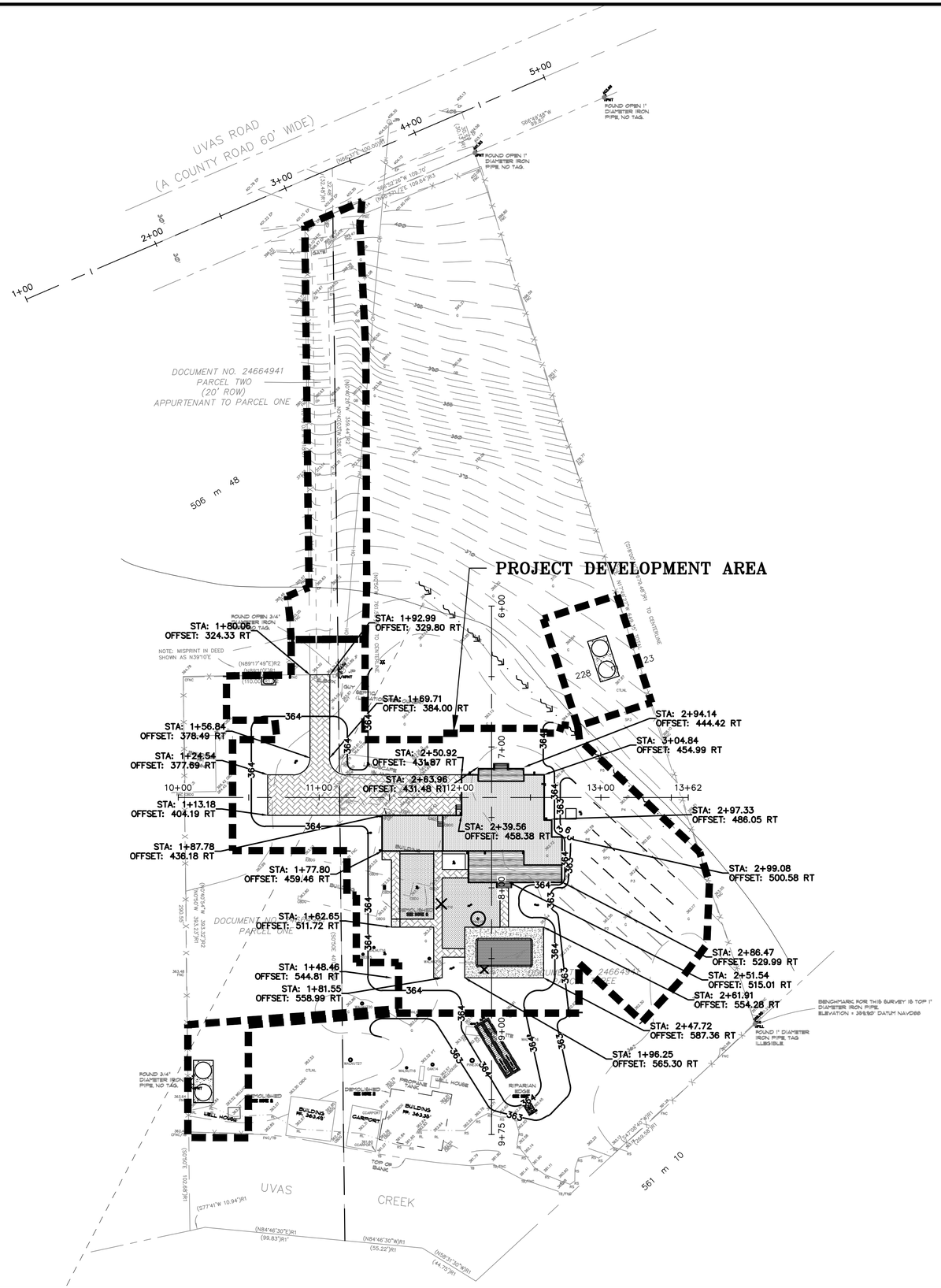

REGISTERED PROFESSIONAL ENGINEER
PETER CARLINO
No. C79555
CIVIL
STATE OF CALIFORNIA
ORIGINAL SIGNATURES IN BLUE INK

LEA & BRAZE ENGINEERING, INC.
CIVIL ENGINEERS | LAND SURVEYORS

MAIN OFFICE:
2495 INDUSTRIAL PKWY WEST
HAYWARD, CALIFORNIA 94545
(510) 887-4086

REGIONAL OFFICES:
ROSEVILLE
DUBLIN
SAN JOSE

WWW.LEABRAZE.COM

OCEGUERA RESIDENCE
13115 UVAS ROAD
MORGAN HILL, CALIFORNIA

SANTA CLARA COUNTY

APN: 756-19-021
756-19-017

HORIZONTAL CONTROL PLAN

REVISIONS	BY
-	-
-	-
-	-
-	-
-	-

JOB NO:	2211012
DATE:	06-15-21
SCALE:	1" = 10'
DESIGN BY:	RDD
CHECKED BY:	TB
SHEET NO:	

C-3.0

09 OF 16 SHEETS

PLAN # ____ OF ____
SHEET

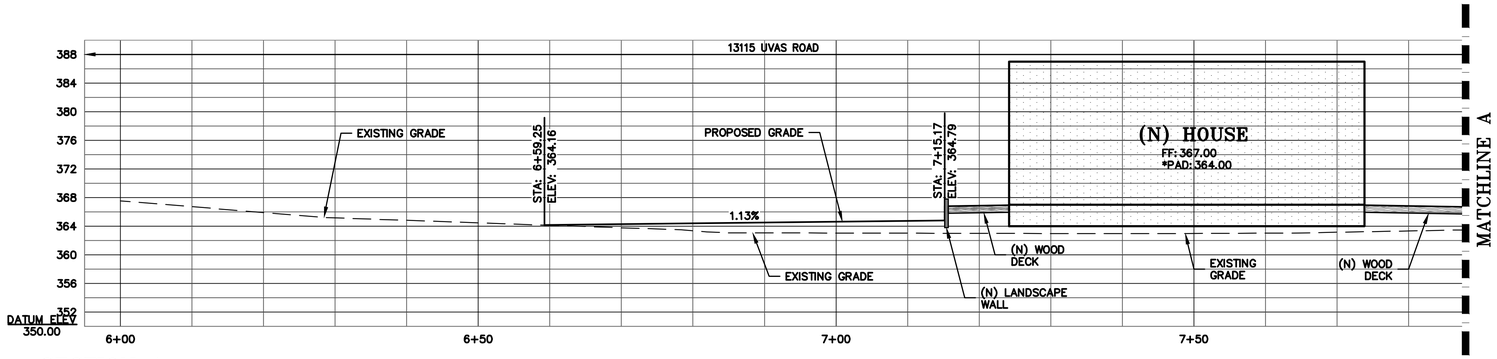

SECTION A

SCALE: 1" = 10' HORIZ & VERT

SECTION A
SCALE: 1" = 10' HORIZ & VERT

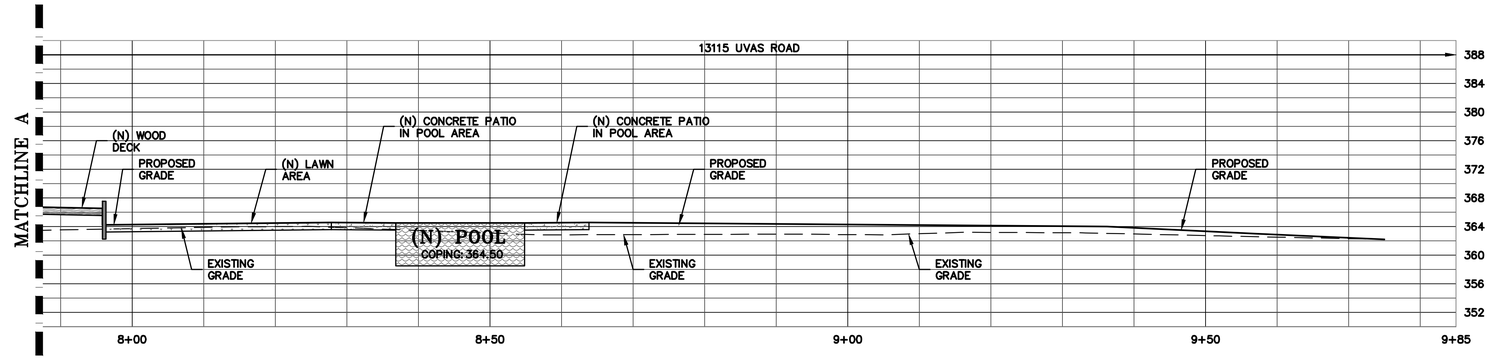

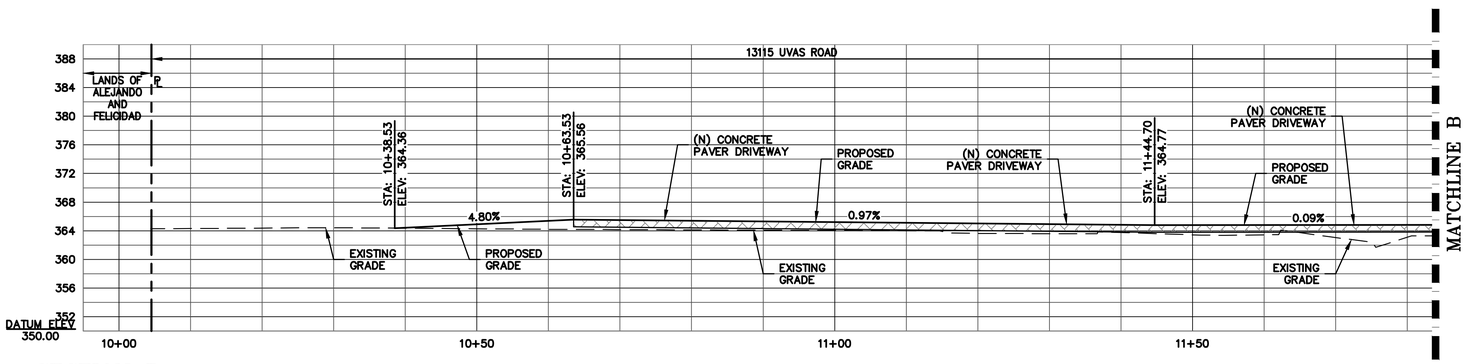

SECTION B

SCALE: 1" = 10' HORIZ & VERT

12+00 12+50 13+00 13+5013+8
TION B

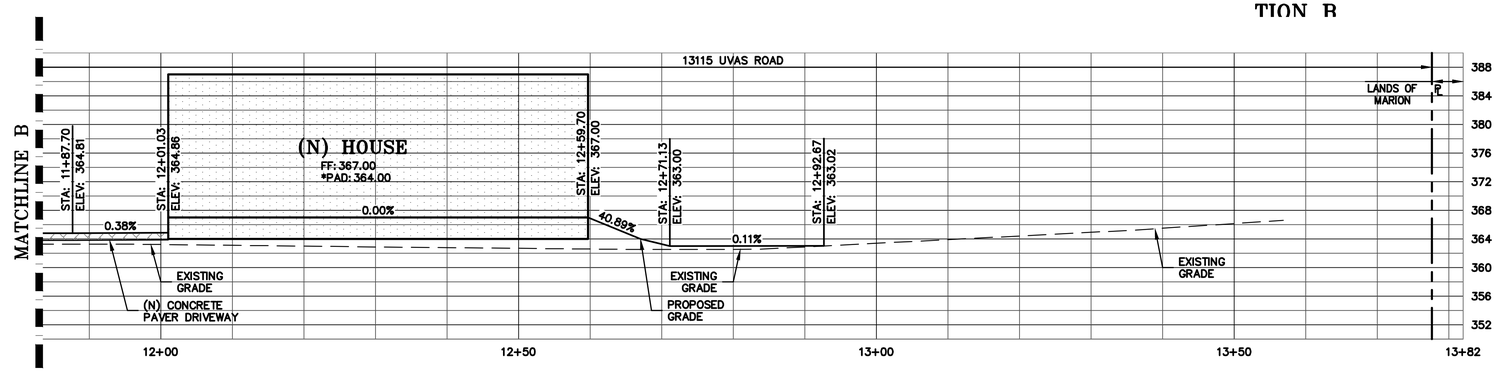

REGISTERED PROFESSIONAL ENGINEER
PETER CARLIAO
No. C79555
CIVIL
STATE OF CALIFORNIA
ORIGINAL SIGNATURES IN BLUE INK

LEA & BRAZE ENGINEERING, INC.
CIVIL ENGINEERS | LAND SURVEYORS
MAIN OFFICE:
2495 INDUSTRIAL PKWY WEST
HAYWARD, CALIFORNIA 94545
(510) 887-4086
REGIONAL OFFICES:
ROSEVILLE
DUBLIN
SAN JOSE
WWW.LEABRAZE.COM

OCEGUERA RESIDENCE
13115 UVAS ROAD
MORGAN HILL, CALIFORNIA

APN: 756-19-021
756-19-017

SANTA CLARA COUNTY

SITE SECTION

REVISIONS	BY
–	–
–	–
–	–
–	–
–	–

JOB NO:	2211012
DATE:	06-15-21
SCALE:	1" = 10'
DESIGN BY:	RDD
CHECKED BY:	TB
SHEET NO:	C-3.1

10 OF 16 SHEETS

PLAN # ____ OF ____
SHEET

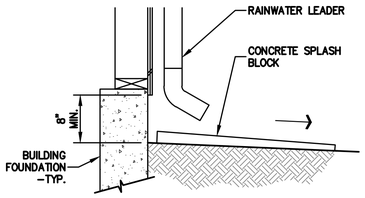

SPLASHBLOCK AT RAIN WATER LEADER

1 / C-4.0 NTS

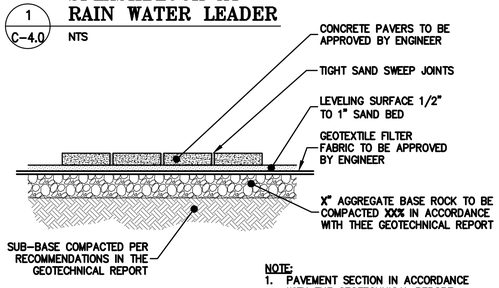

NOTE:
1. PAVEMENT SECTION IN ACCORDANCE WITH THE GEOTECHNICAL REPORT.
2. SUBGRADE TO BE COMPACTED IN ACCORDANCE WITH THE GEOTECHNICAL REPORT.

PAVER DETAIL

2 / C-4.0 NTS

NOTES:
1. SLOPE ALL CONCRETE TO DRAIN 1% MIN.
2. SEE LANDSCAPE OR ARCHITECTURAL PLANS FOR CONCRETE COLORS AND FINISHES.
3. EASE ALL EDGES R=1/2"
4. FELT SHALL BE NON-ASPHALTIC IMPREGNATED.

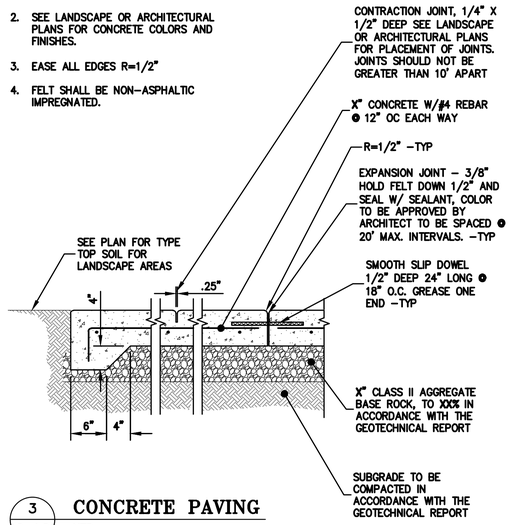

CONCRETE PAVING

3 / C-4.0 NTS

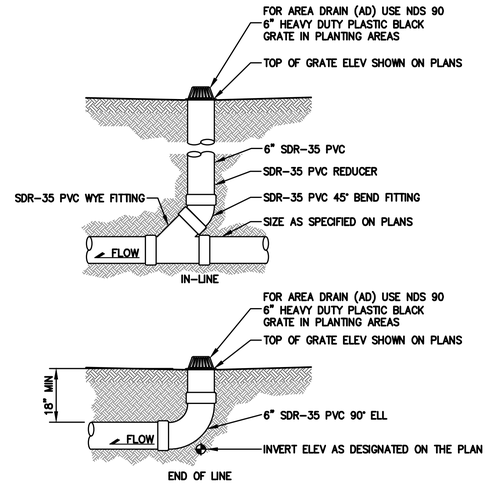

NOTE:
GLUED FITTINGS MAY BE SUBSTITUTED FOR GASKETED FITTINGS AT THE OPTION OF THE INSTALLATION CONTRACTOR.

AREA DRAIN

5 / C-4.0 NTS

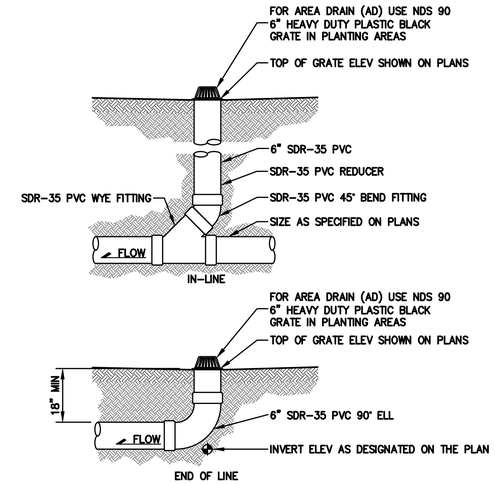

NOTE:
GLUED FITTINGS MAY BE SUBSTITUTED FOR GASKETED FITTINGS AT THE OPTION OF THE INSTALLATION CONTRACTOR.

AREA DRAIN

5 / C-4.0 NTS

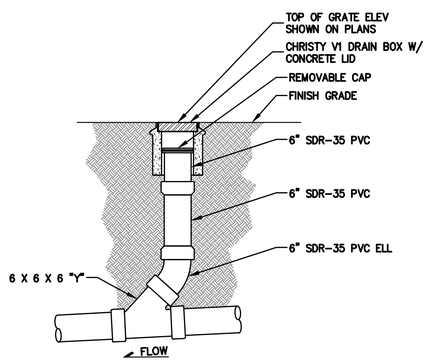

ON-SITE CLEANOUT

6 / C-4.0 NTS

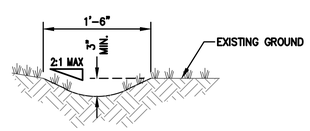

EARTHEN SWALE DETAIL

7 / C-4.0 NTS

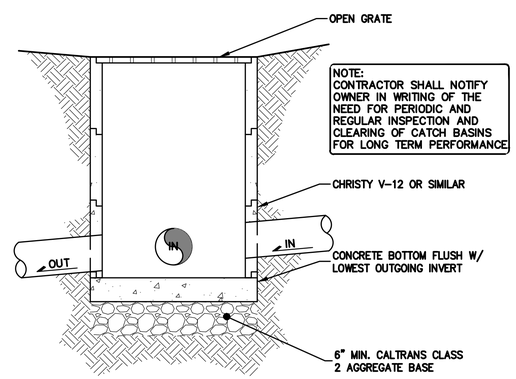

CATCH BASIN

8 / C-4.0 NTS

PLAN # ____ OF ____
SHEET

REGISTERED PROFESSIONAL ENGINEER PETER CARLINO No. C79555 CIVIL STATE OF CALIFORNIA
ORIGINAL SIGNATURES IN BLUE INK

LEA & BRAZE ENGINEERING, INC.
CIVIL ENGINEERS | LAND SURVEYORS
MAIN OFFICE: 2495 INDUSTRIAL PKWY WEST HAYWARD, CALIFORNIA 94545 (510) 887-4086
REGIONAL OFFICES: ROSEVILLE DUBLIN SAN JOSE
WWW.LEABRAZE.COM

OCEGUERA RESIDENCE
13115 UVAS ROAD
MORGAN HILL, CALIFORNIA
SANTA CLARA COUNTY
APN: 756-19-021 756-19-017

DETAILS

REVISIONS	BY
–	–
–	–
–	–
–	–
–	–

JOB NO:	2211012
DATE:	06-15-21
SCALE:	NTS
DESIGN BY:	RDD
CHECKED BY:	TB
SHEET NO:	C-4.0

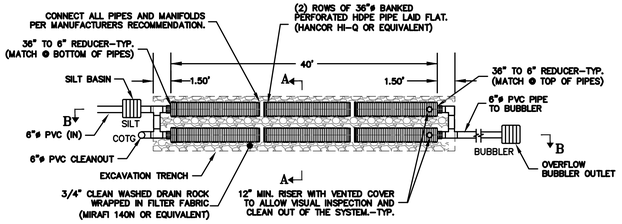

PLAN VIEW

STORAGE PIPE NOMINAL I.D.	NOMINAL O.D.	TYPICAL SPACING "S"	MIN. SIDE WALL "X"
36" (900 MM)	42" (1,067 MM)	24" (600 MM)	18" (458 MM)

NOTES:

1. ALL REFERENCES TO CLASS I OR II MATERIAL ARE PER ASTM D2321 "STANDARD PRACTICE FOR UNDERGROUND INSTALLATION OF THERMOPLASTIC PIPE FOR SEWERS AND OTHER GRAVITY FLOW APPLICATIONS", LATEST EDITION.

2. ALL RETENTION AND DETENTION SYSTEMS SHALL BE INSTALLED IN ACCORDANCE WITH ASTM D2321, LATEST EDITION AND THE MANUFACTURER'S PUBLISHED INSTALLATION GUIDELINES.

3. MEASURES SHOULD BE TAKEN TO PREVENT THE MIGRATION OF NATIVE FINES INTO THE BACKFILL MATERIAL, WHEN REQUIRED. SEE ASTM D2321.

4. FILTER FABRIC: A GEOTEXTILE FABRIC MAY BE USED AS SPECIFIED BY THE ENGINEER TO PREVENT THE MIGRATION OF FINES FROM THE NATIVE SOIL INTO THE SELECT BACKFILL MATERIAL.

5. FOUNDATION: WHERE THE TRENCH BOTTOM IS UNSTABLE, THE CONTRACTOR SHALL EXCAVATE TO A DEPTH REQUIRED BY THE ENGINEER AND REPLACE WITH SUITABLE MATERIAL AS SPECIFIED BY THE ENGINEER. AS AN ALTERNATIVE AND AT THE DISCRETION OF THE DESIGN ENGINEER, THE TRENCH BOTTOM MAY BE STABILIZED USING A GEOTEXTILE MATERIAL.

6. BEDDING: SUITABLE MATERIAL SHALL BE CLASS II*. THE CONTRACTOR SHALL PROVIDE DOCUMENTATION FOR MATERIAL SPECIFICATION TO ENGINEER. UNLESS OTHERWISE NOTED BY THE ENGINEER, MINIMUM BEDDING THICKNESS SHALL BE 4" (100mm) FOR 4"–24" (100mm–600mm); 6" (150mm) FOR 30"–60" (750mm–900mm).

7. INITIAL BACKFILL: SUITABLE MATERIAL SHALL BE CLASS II* IN THE PIPE ZONE EXTENDING NOT LESS THAN 6" ABOVE CROWN OF PIPE. THE CONTRACTOR SHALL PROVIDE DOCUMENTATION FOR MATERIAL SPECIFICATION TO ENGINEER. MATERIAL SHALL BE INSTALLED AS REQUIRED IN ASTM D2321, LATEST EDITION.

8. MINIMUM COVER: MINIMUM COVER OVER ALL RETNETION/DETENTION SYSTEMS IN NON-TRAFFIC APPLICATIONS (GRASS OR LANDSCAPE AREAS) IS 18" FROM TOP OF PIPE TO GROUND SURFACE. ADDITIONAL COVER MAY BE REQUIRED TO PREVENT FLOATATION. FOR TRAFFIC APPLICATIONS, MINIMUM COVER IS 18" UP TO 36" DIAMETER PIPE AND 24" OF COVER FOR 42" – 60" DIAMETER PIPE, MEASURED FROM TOP OF PIPE TO BOTTOM OF FLEXIBLE PAVEMENT OR TO TOP OF RIGID PAVEMENT.

* CLASS I BACKFILL REQUIRED AROUND 60" DIAMETER FITTINGS.

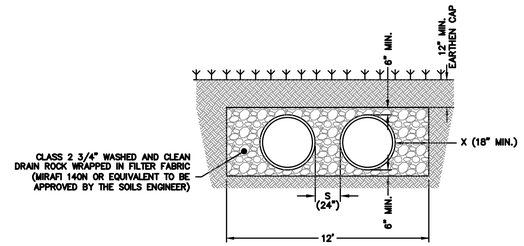

SECTION A–A

THIS IS A SCHEMATIC DETAIL. REFER TO PLAN FOR INLET LOCATIONS, INVERTS, ACCESS COVERS, ETC.

NOTE:
REFER TO THE PLANS FOR SPECIFIC INLET AND OUTLET LOCATIONS.
REFER TO THE PLANS FOR SPECIFIC ACCESS COVER AND CLEANOUT LOCATIONS.

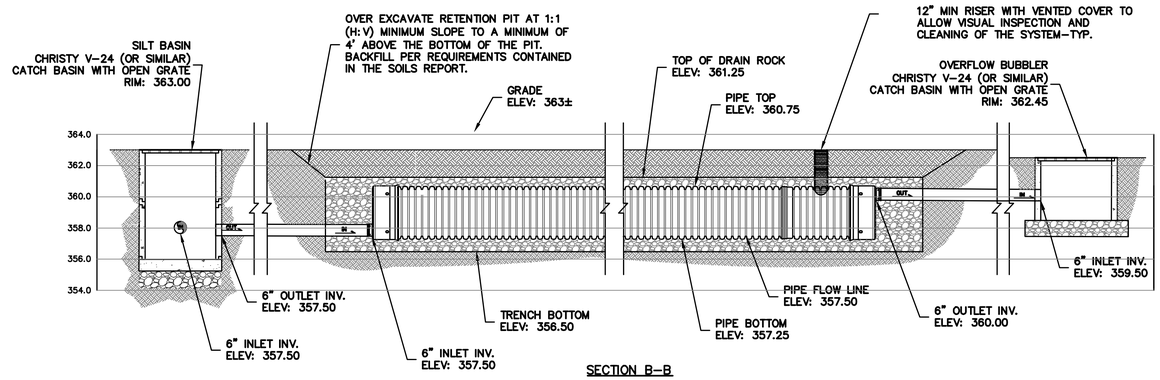

SECTION B–B

1 / C-4.1 **TYPICAL RETENTION SYSTEM DETAILS**
NTS

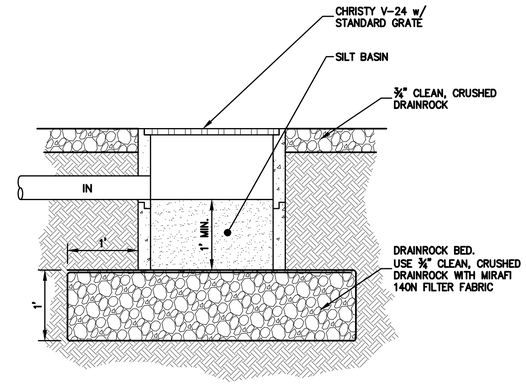

2 / C-4.1 **BUBBLER BOX**
NTS

PLAN # ____ OF ____
SHEET

REGISTERED PROFESSIONAL ENGINEER
PETER CARLANO
No. C79559
CIVIL
STATE OF CALIFORNIA
ORIGINAL SIGNATURES IN BLUE INK

LEA & BRAZE ENGINEERING, INC.
CIVIL ENGINEERS | LAND SURVEYORS
MAIN OFFICE:
2495 INDUSTRIAL PKWY WEST
HAYWARD, CALIFORNIA 94545
(510) 887-4086
REGIONAL OFFICES:
ROSEVILLE
DUBLIN
SAN JOSE
WWW.LEABRAZE.COM

OCEGUERA RESIDENCE
13115 UVAS ROAD
MORGAN HILL, CALIFORNIA
SANTA CLARA COUNTY
APN: 756-19-021
756-19-017

DETAILS

REVISIONS	BY
–	–
–	–
–	–
–	–
–	–

JOB NO: 2211012
DATE: 06-15-21
SCALE: NTS
DESIGN BY: RDD
CHECKED BY: TB
SHEET NO:
C-4.1
12 OF 16 SHEETS

GENERAL NOTES

ALL GENERAL NOTES, SHEET NOTES, AND LEGEND NOTES FOUND IN THESE DOCUMENTS SHALL APPLY TYPICALLY THROUGHOUT. IF INCONSISTENCIES ARE FOUND IN THE VARIOUS NOTATIONS, NOTIFY THE ENGINEER IMMEDIATELY IN WRITING REQUESTING CLARIFICATION.

THESE DRAWINGS AND THEIR CONTENT ARE AND SHALL REMAIN THE PROPERTY OF LEA AND BRAZE ENGINEERING, INC. WHETHER THE PROJECT FOR WHICH THEY ARE PREPARED IS EXECUTED OR NOT. THEY ARE NOT TO BE USED BY ANY PERSONS ON OTHER PROJECTS OR EXTENSIONS OF THE PROJECT EXCEPT BY AGREEMENT IN WRITING AND WITH APPROPRIATE COMPENSATION TO THE ENGINEER.

ALL WORK SHALL COMPLY WITH APPLICABLE CODES AND TRADE STANDARDS WHICH GOVERN EACH PHASE OF WORK INCLUDING, BUT NOT LIMITED TO, CALIFORNIA MECHANICAL CODE, CALIFORNIA PLUMBING CODE, CALIFORNIA ELECTRICAL CODE, CALIFORNIA FIRE CODE, CALTRANS STANDARDS AND SPECIFICATIONS, AND ALL APPLICABLE STATE AND/OR LOCAL CODES AND/OR LEGISLATION.

IT IS THE RESPONSIBILITY OF THE CONTRACTOR AND ALL SUBCONTRACTORS TO CHECK AND VERIFY ALL CONDITIONS, DIMENSIONS, LINES AND LEVELS INDICATED. PROPER FIT AND ATTACHMENT OF ALL PARTS IS REQUIRED. SHOULD THERE BE ANY DISCREPANCIES, IMMEDIATELY NOTIFY THE ENGINEER FOR CORRECTION OR ADJUSTMENT THE EVENT OF FAILURE TO DO SO, THE CONTRACTOR SHALL BE RESPONSIBLE FOR CORRECTION OF ANY ERROR.

ALL DIMENSIONS AND CONDITIONS SHALL BE CHECKED AND VERIFIED ON THE JOB BY EACH SUBCONTRACTOR BEFORE HE/SHE BEGINS HIS/HER WORK. ANY ERRORS, OMISSION, OR DISCREPANCIES SHALL BE BROUGHT TO THE ATTENTION OF THE OWNER/CONTRACTOR BEFORE CONSTRUCTION BEGINS.

COMMENCEMENT OF WORK BY THE CONTRACTOR AND/OR ANY SUBCONTRACTOR SHALL INDICATE KNOWLEDGE AND ACCEPTANCE OF ALL CONDITIONS DESCRIBED IN THESE CONSTRUCTION DOCUMENTS, OR EXISTING ON SITE, WHICH COULD AFFECT THEIR WORK.

WORK SEQUENCE

IN THE EVENT ANY SPECIAL SEQUENCING OF THE WORK IS REQUIRED BY THE OWNER OR THE CONTRACTOR, THE CONTRACTOR SHALL ARRANGE A CONFERENCE BEFORE ANY SUCH WORK IS BEGUN.

SITE EXAMINATION: THE CONTRACTOR AND ALL SUBCONTRACTORS SHALL THOROUGHLY EXAMINE THE SITE AND FAMILIARIZE HIM/HERSELF WITH THE CONDITIONS UNDER WHICH THE WORK IS TO BE PERFORMED. THE CONTRACTOR SHALL VERIFY AT THE SITE ALL MEASUREMENTS AFFECTING HIS/HER WORK AND SHALL BE RESPONSIBLE FOR THE CORRECTIONS OF THE SAME. NO EXTRA COMPENSATION WILL BE ALLOWED TO THE CONTRACTOR FOR EXPENSES DUE TO HIS/HER NEGLECT TO EXAMINE, OR FAILURE TO DISCOVER, CONDITIONS WHICH AFFECT HIS/HER WORK.

LEA AND BRAZE ENGINEERING, INC. EXPRESSLY RESERVES ITS COMMON LAW COPYRIGHT AND OTHER PROPERTY RIGHTS IN THESE PLANS. THESE PLANS ARE NOT TO BE REPRODUCED, CHANGED OR COPIED IN ANY FORM OR MANNER WHATSOEVER, NOR ARE THEY TO BE ASSIGNED TO A THIRD PARTY WITHOUT FIRST OBTAINING THE WRITTEN PERMISSION AND CONSENT OF LEA AND BRAZE ENGINEERING, INC. IN THE EVENT OF UNAUTHORIZED REUSE OF THESE PLANS BY A THIRD PARTY, THE THIRD PARTY SHALL HOLD HARMLESS LEA AND BRAZE ENGINEERING, INC.

CONSTRUCTION IS ALWAYS LESS THAN PERFECT SINCE PROJECTS REQUIRE THE COORDINATION AND INSTALLATION OF MANY INDIVIDUAL COMPONENTS BY VARIOUS CONSTRUCTION INDUSTRY TRADES. THESE DOCUMENTS CANNOT PORTRAY ALL COMPONENTS OR ASSEMBLIES EXACTLY. IT IS THE INTENTION OF THESE ENGINEERING DOCUMENTS THAT THEY REPRESENT A REASONABLE STANDARD OF CARE IN THEIR CONTENT. IT IS ALSO PRESUMED BY THESE DOCUMENTS THAT CONSTRUCTION REVIEW SERVICES WILL BE PROVIDED BY THE ENGINEER. SHOULD THE OWNER NOT RETAIN THE ENGINEER TO PROVIDE SUCH SERVICES, OR SHOULD HE/SHE RETAIN THE ENGINEER TO PROVIDE ONLY PARTIAL OR LIMITED SERVICES, THEN IT SHALL BE THE OWNER'S AND CONTRACTOR'S RESPONSIBILITY TO FULLY RECOGNIZE AND PROVIDE THAT STANDARD OF CARE.

IF THE OWNER OR CONTRACTOR OBSERVES OR OTHERWISE BECOMES AWARE OF ANY FAULT OR DEFECT IN THE PROJECT OR NONCONFORMANCE WITH THE CONTRACT DOCUMENTS, PROMPT WRITTEN NOTICE THEREOF SHALL BE GIVEN BY THE OWNER AND/OR CONTRACTOR TO THE ENGINEER.

THE ENGINEER SHALL NOT HAVE CONTROL OF OR CHARGE OF AND SHALL NOT BE RESPONSIBLE FOR CONSTRUCTION MEANS, METHODS, TECHNIQUES, SEQUENCES, OR PROCEDURES, OR FOR SAFETY PRECAUTIONS AND PROGRAMS IN CONNECTION WITH THE WORK, FOR THE ACTS OR OMISSIONS OF THE CONTRACTOR, SUBCONTRACTORS, OR ANY OTHER PERSONS PERFORMING ANY OF THE WORK, OR FOR THE FAILURE OF ANY OF THEM TO CARRY OUT THE WORK IN ACCORDANCE WITH THE CONTRACT DOCUMENTS.

SITE PROTECTION

PROTECT ALL LANDSCAPING THAT IS TO REMAIN. ANY DAMAGE OR LOSS RESULTING FROM EXCAVATION, GRADING, OR CONSTRUCTION WORK SHALL BE CORRECTED OR REPLACED BY THE CONTRACTOR AT NO ADDITIONAL COST TO THE OWNER. THE CONTRACTOR SHALL BE RESPONSIBLE FOR THE LOCATION OF ALL EXISTING SITE UTILITIES AND SHALL COORDINATE THEIR REMOVAL OR MODIFICATIONS (IF ANY) TO AVOID ANY INTERRUPTION OF SERVICE TO ADJACENT AREAS. THE GENERAL CONTRACTOR SHALL INFORM HIM/HERSELF OF MUNICIPAL REGULATIONS AND CARRY OUT HIS/HER WORK IN COMPLIANCE WITH ALL FEDERAL AND STATE REQUIREMENTS TO REDUCE FIRE HAZARDS AND INJURIES TO THE PUBLIC.

STORMWATER POLLUTION PREVENTION NOTES

1) STORE, HANDLE, AND DISPOSE OF CONSTRUCTION MATERIALS AND WASTES PROPERLY, SO AS TO PREVENT THEIR CONTACT WITH STORMWATER.
2) CONTROL AND PREVENT THE DISCHARGE OF ALL POTENTIAL POLLUTANTS, INCLUDING SOLID WASTES, PAINTS, CONCRETE, PETROLEUM PRODUCTS, CHEMICALS, WASH WATER OR SEDIMENT, AND NON-STORMWATER DISCHARGES TO STORM DRAINS AND WATER COURSES.
3) USE SEDIMENT CONTROL OR FILTRATION TO REMOVE SEDIMENT FROM DEWATERING EFFLUENT.
4) AVOID CLEANING, FUELING, OR MAINTAINING VEHICLES ON SITE, EXCEPT IN A DESIGNATED AREA IN WHICH RUNOFF IS CONTAINED AND TREATED.
5) DELINEATE CLEARING LIMITS, EASEMENTS, SETBACKS, SENSITIVE OR CRITICAL AREAS, BUFFER ZONES, TREES AND DISCHARGE COURSE WITH FIELD MARKERS.
6) PROTECT ADJACENT PROPERTIES AND UNDISTURBED AREAS FROM CONSTRUCTION IMPACTS USING VEGETATIVE BUFFER STRIPS, SEDIMENT BARRIERS OF FILTERS, DIKES, MULCHING, OR OTHER MEASURES AS APPROPRIATE.
7) PERFORM CLEARING AND EARTH MOVING ACTIVITIES DURING DRY WEATHER TO THE MAXIMUM EXTENT PRACTICAL.
8) LIMIT AND TIME APPLICATIONS OF PESTICIDES AND FERTILIZERS TO PREVENT POLLUTED RUNOFF.
9) LIMIT CONSTRUCTION ACCESS ROUTES AND STABILIZE DESIGNATED ACCESS POINTS.
10) AVOID TRACKING DIRT OR MATERIALS OFF-SITE; CLEAN OFF-SITE PAVED AREAS AND SIDEWALKS USING DRY SWEEPING METHODS TO THE MAXIMUM EXTENT PRACTICAL.

SUPPLEMENTAL MEASURES

A. THE PHRASE "NO DUMPING - DRAINS TO BAY" OR EQUALLY EFFECTIVE PHRASE MUST BE LABELED ON STORM DRAIN INLETS (BY STENCILING, BRANDING, OR PLAQUES) TO ALERT THE PUBLIC TO THE DESTINATION OF STORM WATER AND TO PREVENT DIRECT DISCHARGE OF POLLUTANTS INTO THE STORM DRAIN.

B. USING FILTRATION MATERIALS ON STORM DRAIN COVERS TO REMOVE SEDIMENT FROM DEWATERING EFFLUENT.

C. STABILIZING ALL DENUDED AREAS AND MAINTAINING EROSION CONTROL MEASURES CONTINUOUSLY FROM OCTOBER 15 AND APRIL 15.

D. REMOVING SPOILS PROMPTLY, AND AVOID STOCKPILING OF FILL MATERIALS, WHEN RAIN IS FORECAST. IF RAIN THREATENS, STOCKPILED SOILS AND OTHER MATERIALS SHALL BE COVERED WITH A TARP OR OTHER WATERPROOF MATERIAL.

E. STORING, HANDLING, AND DISPOSING OF CONSTRUCTION MATERIALS AND WASTES SO AS TO AVOID THEIR ENTRY TO THE STORM DRAIN SYSTEMS OR WATER BODY.

F. AVOIDING CLEANING, FUELING, OR MAINTAINING VEHICLES ON-SITE, EXCEPT IN AN AREA DESIGNATED TO CONTAIN AND TREAT RUNOFF.

GRADING & DRAINAGE NOTES:

1. SCOPE OF WORK

THESE SPECIFICATIONS AND APPLICABLE PLANS PERTAIN TO AND INCLUDE ALL SITE GRADING AND EARTHWORK ASSOCIATED WITH THE PROJECT INCLUDING, BUT NOT LIMITED TO THE FURNISHING OF ALL LABOR, TOOLS AND EQUIPMENT NECESSARY FOR SITE CLEARING AND GRUBBING, SITE PREPARATION, DISPOSAL OF EXCESS OR UNSUITABLE MATERIAL, STRIPPING, KEYING, EXCAVATION, OVER EXCAVATION, RECOMPACTION PREPARATION FOR SOIL RECEIVING FILL, PAVEMENT, FOUNDATION OF SLABS, EXCAVATION, IMPORTATION OF ANY REQUIRED FILL MATERIAL, PROCESSING, PLACEMENT AND COMPACTION OF FILL AND SUBSIDIARY WORK NECESSARY TO COMPLETE THE GRADING TO CONFORM TO THE LINES, GRADING AND SLOPE SHOWN ON THE PROJECT GRADING PLANS.

2. GENERAL

A. ALL SITE GRADING AND EARTHWORK SHALL CONFORM TO THE RECOMMENDATIONS OF THESE SPECIFICATIONS, THE SOILS REPORT BY ROCK SOLID ENGINEERING INC.; AND THE COUNTY OF SANTA CLARA.

B. ALL FILL MATERIALS SHALL BE DENSIFIED SO AS TO PRODUCE A DENSITY NOT LESS THAN 90% RELATIVE COMPACTION BASED UPON ASTM TEST DESIGNATION D1557. FIELD DENSITY TEST WILL BE PERFORMED IN ACCORDANCE WITH ASTM TEST DESIGNATION 2922 AND 3017. THE LOCATION AND FREQUENCY OF THE FIELD DENSITY TEST WILL BE AS DETERMINED BY THE SOIL ENGINEER. THE RESULTS OF THESE TEST AND COMPLIANCE WITH THE SPECIFICATIONS WILL BE THE BASIS UPON WHICH SATISFACTORY COMPLETION OF THE WORK WILL BE JUDGED BY THE SOIL ENGINEER. ALL CUT AND FILL SLOPES SHALL BE CONSTRUCTED AS SHOWN ON PLANS, BUT NO STEEPER THAN TWO (2) HORIZONTAL TO ONE (1) VERTICAL.

C. THE CONTRACTOR SHALL BE RESPONSIBLE FOR THE SATISFACTORY COMPLETION OF ALL THE EARTHWORK IN ACCORDANCE WITH THESE PLANS AND SPECIFICATIONS. NO DEVIATION FROM THESE SPECIFICATIONS SHALL BE MADE EXCEPT UPON WRITTEN APPROVAL BY THE SOILS ENGINEER. BOTH CUT AND FILL AREAS SHALL BE SURFACE COMPLETED TO THE SATISFACTION OF THE SOILS ENGINEER AT THE CONCLUSION OF ALL GRADING OPERATIONS AND PRIOR TO FINAL ACCEPTANCE. THE CONTRACTOR SHALL NOTIFY THE SOILS ENGINEER AT LEAST TWO (2) WORKING DAYS PRIOR TO DOING ANY SITE GRADING AND EARTHWORK INCLUDING CLEARING.

3. CLEARING AND GRUBBING

A. THE CONTRACTOR SHALL ACCEPT THE SITE IN ITS PRESENT CONDITION. ALL EXISTING PUBLIC IMPROVEMENTS SHALL BE PROTECTED. ANY IMPROVEMENTS DAMAGED SHALL BE REPLACED BY THE CONTRACTOR AS DIRECTED BY THE LOCAL JURISDICTION WITH NO EXTRA COMPENSATION.

B. ALL ABANDONED BUILDINGS AND FOUNDATIONS, TREE (EXCEPT THOSE SPECIFIED TO REMAIN FOR LANDSCAPING PURPOSES), FENCES, VEGETATION AND ANY SURFACE DEBRIS SHALL BE REMOVED AND DISPOSED OF OFF THE SITE BY THE CONTRACTOR.

C. ALL ABANDONED SEPTIC TANKS AND ANY OTHER SUBSURFACE STRUCTURES EXISTING IN PROPOSED DEVELOPMENT AREAS SHALL BE REMOVED PRIOR TO ANY GRADING OR FILL OPERATION. ALL APPURTENANT DRAIN FIELDS AND OTHER CONNECTING LINES MUST ALSO BE TOTALLY REMOVED.

D. ALL ABANDONED UNDERGROUND IRRIGATION OR UTILITY LINES SHALL BE REMOVED OR DEMOLISHED. THE APPROPRIATE FINAL DISPOSITION OF SUCH LINES DEPEND UPON THEIR DEPTH AND LOCATION AND THE METHOD OF REMOVAL OR DEMOLITION SHALL BE DETERMINED BY THE SOILS ENGINEER. ONE OF THE FOLLOWING METHODS WILL BE USED:

(1) EXCAVATE AND TOTALLY REMOVE THE UTILITY LINE FROM THE TRENCH.

(2) EXCAVATE AND CRUSH THE UTILITY LINE IN THE TRENCH.

(3) CAP THE ENDS OF THE UTILITY LINE WITH CONCRETE TO PREVENT THE ENTRANCE OF WATER. THE LOCATIONS AT WHICH THE UTILITY LINE WILL BE CAPPED WILL BE DETERMINED BY THE UTILITY DISTRICT ENGINEER. THE LENGTH OF THE CAP SHALL NOT BE LESS THAN FIVE FEET, AND THE CONCRETED MIX EMPLOYED SHALL HAVE MINIMUM SHRINKAGE.

4. SITE PREPARATION AND STRIPPING

A. ALL SURFACE ORGANICS SHALL BE STRIPPED AND REMOVED FROM BUILDING PADS, AREAS TO RECEIVE COMPACTED FILL AND PAVEMENT AREAS.

B. UPON THE COMPLETION OF THE ORGANIC STRIPPING OPERATION, THE GROUND SURFACE (NATIVE SOIL SUBGRADE) OVER THE ENTIRE AREA OF ALL BUILDING PADS, STREET AND PAVEMENT AREAS AND ALL AREAS TO RECEIVE COMPACTED FILL SHALL BE PLOWED OR SCARIFIED UNTIL THE SURFACE IS FREE OF RUTS, HUMMOCKS OR OTHER UNEVEN FEATURES WHICH MAY INHIBIT UNIFORM SOIL COMPACTION. THE GROUND SURFACE SHALL THEN BE DISCED OR BLADED TO A DEPTH OF AT LEAST 6 INCHES. UPON ENGINEER'S SATISFACTION, THE NEW SURFACE SHALL BE WATER CONDITIONED AND RECOMPACTED PER REQUIREMENTS FOR COMPACTING FILL MATERIAL.

5. EXCAVATION

A. UPON COMPLETION OF THE CLEARING AND GRUBBING, SITE PREPARATION AND STRIPPING, THE CONTRACTOR SHALL MAKE EXCAVATIONS TO LINES AND GRADES NOTED ON THE PLAN. WHERE REQUIRED BY THE SOILS ENGINEER, UNACCEPTABLE NATIVE SOILS OR UNENGINEERED FILL SHALL BE OVER EXCAVATED BELOW THE DESIGN GRADE. SEE PROJECT SOILS REPORT FOR DISCUSSION OF OVER EXCAVATION OF THE UNACCEPTABLE MATERIAL. RESULTING GROUND LINE SHALL BE SCARIFIED, MOISTURE-CONDITIONED AND RECOMPACTED AS SPECIFIED IN SECTION 4 OF THESE SPECIFICATIONS. COMPACTED FILL MATERIAL SHALL BE PLACED TO BRING GROUND LEVEL BACK TO DESIGN GRADE.

B. EXCAVATED MATERIALS SUITABLE FOR COMPACTED FILL MATERIAL SHALL BE UTILIZED IN MAKING THE REQUIRED COMPACTED FILLS. THOSE NATIVE MATERIALS CONSIDERED UNSUITABLE BY THE SOILS ENGINEER SHALL BE DISPOSED OF OFF THE SITE BY THE CONTRACTOR.

6. PLACING, SPREADING AND COMPACTING FILL MATERIAL

A. FILL MATERIALS

THE MATERIALS PROPOSED FOR USE AS COMPACTED FILL SHALL BE APPROVED BY THE SOILS ENGINEER BEFORE COMMENCEMENT OF GRADING OPERATIONS. THE NATIVE MATERIAL IS CONSIDERED SUITABLE FOR FILL; HOWEVER, ANY NATIVE MATERIAL DESIGNATED UNSUITABLE BY THE SOILS ENGINEER SHALL BE REMOVED FROM THE SITE BY THE CONTRACTOR. ANY IMPORTED MATERIAL SHALL BE APPROVED FOR USE BY THE SOILS ENGINEER, IN WRITING, BEFORE BEING IMPORTED TO THE SITE AND SHALL POSSESS SUFFICIENT FINES TO PROVIDE A COMPETENT SOIL MATRIX AND SHALL BE FREE OF VEGETATIVE AND ORGANIC MATTER AND OTHER DELETERIOUS MATERIALS. ALL FILL VOIDS SHALL BE FILLED AND PROPERLY COMPACTED. NO ROCKS LARGER THAN THREE INCHES IN DIAMETER SHALL BE PERMITTED.

B. FILL CONSTRUCTION

THE SOILS ENGINEER SHALL APPROVE THE NATIVE SOIL SUBGRADE BEFORE PLACEMENT OF ANY COMPACTED FILL MATERIAL. UNACCEPTABLE NATIVE SOIL SHALL BE REMOVED AS DIRECTED BY THE SOILS ENGINEER. THE RESULTING GROUND LINE SHALL BE SCARIFIED MOISTURE CONDITIONED AND RECOMPACTED AS SPECIFIED IN SECTION 4 OF THESE SPECIFICATIONS. COMPACTED FILL MATERIAL SHALL BE PLACED TO BRING GROUND LEVEL BACK TO DESIGN GRADE. GROUND PREPARATION SHALL BE FOLLOWED CLOSELY BY FILL PLACEMENT TO PREVENT DRYING OUT OF THE SUBSOIL BEFORE PLACEMENT OF THE FILL.

THE APPROVED FILL MATERIALS SHALL BE PLACED IN UNIFORM HORIZONTAL LAYERS NO THICKER THAN 8" IN LOOSE THICKNESS. LAYERS SHALL BE SPREAD EVENLY AND SHALL BE THOROUGHLY BLADE MIXED DURING THE SPREADING TO ENSURE UNIFORMITY OF MATERIAL IN EACH LAYER. THE SCARIFIED SUBGRADE AND FILL MATERIAL SHALL BE MOISTURE CONDITIONED TO AT LEAST OPTIMUM MOISTURE. WHEN THE MOISTURE CONTENT OF THE FILL IS BELOW THAT SPECIFIED, WATER SHALL BE ADDED UNTIL THE MOISTURE DURING THE COMPACTION PROCESS. WHEN THE MOISTURE CONTENT OF THE FILL IS ABOVE THAT SPECIFIED, THE FILL MATERIAL SHALL BE AERATED BY BLADING OR OTHER SATISFACTORY METHODS UNTIL THE MOISTURE CONTENT IS AS SPECIFIED.

AFTER EACH LAYER HAS BEEN PLACED, MIXED, SPREAD EVENLY AND MOISTURE CONDITIONED, IT SHALL BE COMPACTED TO AT LEAST THE SPECIFIED DENSITY.

THE FILL OPERATION SHALL BE CONTINUED IN COMPACTED LAYERS AS SPECIFIED ABOVE UNTIL THE FILL HAS BEEN BROUGHT TO THE FINISHED SLOPES AND GRADES AS SHOWN ON THE PLANS. NO LAYER SHALL BE ALLOWED TO DRY OUT BEFORE SUBSEQUENT LAYERS ARE PLACED.

COMPACTION EQUIPMENT SHALL BE OF SUCH DESIGN THAT IT WILL BE ABLE TO COMPACT THE FILL TO THE SPECIFIED MINIMUM COMPACTION WITHIN THE SPECIFIED MOISTURE CONTENT RANGE. COMPACTION OF EACH LAYER SHALL BE CONTINUOUS OVER ITS ENTIRE AREA UNTIL THE REQUIRED MINIMUM DENSITY HAS BEEN OBTAINED.

7. CUT OR FILL SLOPES

ALL CONSTRUCTED SLOPES, BOTH CUT AND FILL, SHALL BE NO STEEPER THAN 2 TO 1 (HORIZONTAL TO VERTICAL). DURING THE GRADING OPERATION, COMPACTED FILL SLOPES SHALL BE OVERFILLED BY AT LEAST ONE FOOT HORIZONTALLY AT THE COMPLETION OF THE GRADING OPERATIONS, THE EXCESS FILL EXISTING ON THE SLOPES SHALL BE BLADED OFF TO CREATE THE FINISHED SLOPE EMBANKMENT. ALL CUT AND FILL SLOPES SHALL BE TRACK WALKED AFTER BEING BROUGHT TO FINISH GRADE AND THEN BE PLANTED WITH EROSION CONTROL SLOPE PLANTING. THE SOILS ENGINEER SHALL REVIEW ALL CUT SLOPES TO DETERMINE IF ANY ADVERSE GEOLOGIC CONDITIONS ARE EXPOSED. IF SUCH CONDITIONS DO OCCUR, THE SOILS ENGINEER SHALL RECOMMEND THE APPROPRIATE MITIGATION MEASURES AT THE TIME OF THEIR DETECTION.

8. SEASONAL LIMITS AND DRAINAGE CONTROL

FILL MATERIALS SHALL NOT BE PLACED, SPREAD OR COMPACTED WHILE IT IS AT AN UNSUITABLY HIGH MOISTURE CONTENT OR DURING OTHERWISE UNFAVORABLE CONDITIONS. WHEN THE WORK IS INTERRUPTED FOR ANY REASON THE FILL OPERATIONS SHALL NOT BE RESUMED UNTIL FIELD TEST PERFORMED BY THE SOILS ENGINEER INDICATE THAT THE MOISTURE CONDITIONS IN AREAS TO BE FILLED ARE AS PREVIOUSLY SPECIFIED. ALL EARTH MOVING AND WORKING OPERATIONS SHALL BE CONTROLLED TO PREVENT WATER FROM RUNNING INTO EXCAVATED AREAS. ALL EXCESS WATER SHALL BE PROMPTLY REMOVED AND THE SITE KEPT DRY.

9. DUST CONTROL

THE CONTRACTOR SHALL TAKE ALL STEPS NECESSARY FOR THE ALLEVIATION OR PREVENTION OF ANY DUST NUISANCE ON OR ABOUT THE SITE CAUSED BY THE CONTRACTOR'S OPERATION EITHER DURING THE PERFORMANCE OF THE GRADING OR RESULTING FROM THE CONDITION IN WHICH THE CONTRACTOR LEAVES THE SITE. THE CONTRACTOR SHALL ASSUME ALL LIABILITY INCLUDING COURT COST OF CO-DEFENDANTS FOR ALL CLAIMS RELATED TO DUST OR WIND-BLOWN MATERIALS ATTRIBUTABLE TO HIS WORK. COST FOR THIS ITEM OF WORK IS TO BE INCLUDED IN THE EXCAVATION ITEM AND NO ADDITIONAL COMPENSATION SHALL BE ALLOWED.

10. INDEMNITY

THE CONTRACTOR WILL HOLD HARMLESS, INDEMNIFY AND DEFEND THE ENGINEER, THE OWNER AND HIS CONSULTANTS AND EACH OF THEIR OFFICERS AND EMPLOYEES AND AGENTS, FROM ANY AND ALL LIABILITY CLAIMS, LOSSES OR DAMAGE ARISING OR ALLEGED TO HEREIN, BUT NOT INCLUDING THE SOLE NEGLIGENCE OF THE OWNER, THE ARCHITECT, THE ENGINEER AND HIS CONSULTANTS AND EACH OF THEIR OFFICERS AND EMPLOYEES AND AGENTS.

11. SAFETY

IN ACCORDANCE WITH GENERALLY ACCEPTED CONSTRUCTION PRACTICES, THE CONTRACTOR WILL BE SOLELY AND COMPLETELY RESPONSIBLE FOR CONDITIONS OF THE JOB SITE. INCLUDING SAFETY OF ALL PERSONS AND PROPERTY DURING PERFORMANCE OF THE WORK. THIS REQUIREMENT WILL APPLY CONTINUOUSLY AND NOT BE LIMITED TO NORMAL WORKING HOURS.

THE DUTY OF THE ENGINEERS TO CONDUCT CONSTRUCTION REVIEW OF THE CONTRACTOR'S PERFORMANCE IS NOT INTENDED TO INCLUDE REVIEW OF THE ADEQUACY OF THE CONTRACTOR'S SAFETY MEASURES, IN, ON OR NEAR THE CONSTRUCTION SITE.

12. GUARANTEE

NEITHER THE FINAL PAYMENT, NOR THE PROVISIONS IN THE CONTRACT, NOR PARTIAL, NOR ENTIRE USE OR OCCUPANCY OF THE PREMISES BY THE OWNER SHALL CONSTITUTE AN ACCEPTANCE OF THE WORK NOT DONE IN ACCORDANCE WITH THE CONTRACT OR RELIEVES THE CONTRACTOR OF LIABILITY IN RESPECT TO ANY EXPRESS WARRANTIES OR RESPONSIBILITY FOR FAULTY MATERIAL OR WORKMANSHIP.

THE CONTRACTOR SHALL REMEDY ANY DEFECTS IN WORK AND PAY FOR ANY DAMAGE TO OTHER WORK RESULTING THERE FROM WHICH SHALL APPEAR WITHIN A PERIOD OF ONE (1) CALENDAR YEAR FROM THE DATE OF FINAL ACCEPTANCE OF THE WORK.

13. TRENCH BACKFILL

EITHER THE ON-SITE INORGANIC SOIL OR APPROVED IMPORTED SOIL MAY BE USED AS TRENCH BACKFILL. THE BACKFILL MATERIAL SHALL BE MOISTURE CONDITIONED PER THESE SPECIFICATIONS AND SHALL BE PLACED IN LIFTS OF NOT MORE THAN SIX INCHES IN HORIZONTAL UNCOMPACTED LAYERS AND BE COMPACTED BY MECHANICAL MEANS TO A MINIMUM OF 90% RELATIVE COMPACTION. IMPORTED SAND MAY BE USED FOR TRENCH BACKFILL MATERIAL PROVIDED IT IS COMPACTED TO AT LEAST 90% RELATIVE COMPACTION. WATER JETTING ASSOCIATED WITH COMPACTION USING VIBRATORY EQUIPMENT WILL BE PERMITTED ONLY WITH IMPORTED SAND BACKFILL WITH THE APPROVAL OF THE SOILS ENGINEER. ALL PIPES SHALL BE BEDDED WITH SAND EXTENDING FROM THE TRENCH BOTTOM TO TWELVE INCHES ABOVE THE PIPE. SAND BEDDING IS TO BE COMPACTED AS SPECIFIED ABOVE FOR SAND BACKFILL.

14. EROSION CONTROL

A. ALL GRADING, EROSION AND SEDIMENT CONTROL AND RELATED WORK UNDERTAKEN ON THIS SITE IS SUBJECT TO ALL TERMS AND CONDITIONS OF THE COUNTY GRADING ORDINANCE AND MADE A PART HEREOF BY REFERENCE.

B. THE CONTRACTOR WILL BE LIABLE FOR ANY AND ALL DAMAGES TO ANY PUBLICLY OWNED AND MAINTAINED ROAD CAUSED BY THE AFORESAID CONTRACTOR'S GRADING ACTIVITIES, AND SHALL BE RESPONSIBLE FOR THE CLEANUP OF ANY MATERIAL SPILLED ON ANY PUBLIC ROAD ON THE HAUL ROUTE.

C. THE EROSION CONTROL MEASURES ARE TO BE OPERABLE DURING THE RAINY SEASON, GENERALLY FROM OCTOBER FIRST TO APRIL FIFTEENTH. EROSION CONTROL PLANTING IS TO BE COMPLETED BY OCTOBER FIRST. NO GRADING OR UTILITY TRENCHING SHALL OCCUR BETWEEN OCTOBER FIRST AND APRIL FIFTEENTH UNLESS AUTHORIZED BY THE LOCAL JURISDICTION.

D. ALL EROSION CONTROL MEASURES SHALL BE MAINTAINED UNTIL DISTURBED AREAS ARE STABILIZED AND CHANGES TO THIS EROSION AND SEDIMENT CONTROL PLAN SHALL BE MADE TO MEET FIELD CONDITIONS ONLY WITH THE APPROVAL OF OR AT THE DIRECTION OF THE SOILS ENGINEER.

E. DURING THE RAINY SEASON, ALL PAVED AREAS SHALL BE KEPT CLEAR OF EARTH MATERIAL AND DEBRIS. THE SITE SHALL BE MAINTAINED SO AS TO MINIMIZE SEDIMENT-LADEN RUNOFF TO ANY STORM DRAINAGE SYSTEM.

F. ALL EROSION CONTROL FACILITIES MUST BE INSPECTED AND REPAIRED AT THE END OF EACH WORKING DAY DURING THE RAINY SEASON.

G. WHEN NO LONGER NECESSARY AND PRIOR TO FINAL ACCEPTANCE OF DEVELOPMENT, SEDIMENT BASINS SHALL BE REMOVED OR OTHERWISE DEACTIVATED AS REQUIRED BY THE LOCAL JURISDICTION.

H. A CONSTRUCTION ENTRANCE SHALL BE PROVIDED AT ANY POINT OF EGRESS FROM THE SITE TO ROADWAY. A CONSTRUCTION ENTRANCE SHOULD BE COMPOSED OF COARSE DRAIN ROCK (2" TO 3") MINIMUM DIAMETER) AT LEAST EIGHT INCHES THICK BY FIFTY (50) FEET LONG BY TWENTY (20) FEET WIDE UNLESS SHOWN OTHERWISE ON PLAN AND SHALL BE MAINTAINED UNTIL THE SITE IS PAVED.

I. ALL AREAS SPECIFIED FOR HYDROSEEDING SHALL BE NOZZLE PLANTED WITH STABILIZATION MATERIAL CONSISTING OF FIBER, SEED, FERTILIZER AND WATER, MIXED AND APPLIED IN THE FOLLOWING PROPORTIONS:

FIBER, 2000 LBS/ACRE
SEED, 200 LBS/ACRE (SEE NOTE J, BELOW)
FERTILIZER (11-8-4), 500 LBS/ACRE
WATER, AS REQUIRED FOR APPLICATION

J. SEED MIX SHALL BE PER CALTRANS STANDARDS.

K. WATER UTILIZED IN THE STABILIZATION MATERIAL SHALL BE OF SUCH QUALITY THAT IT WILL PROMOTE GERMINATION AND STIMULATE GROWTH OF PLANTS. IT SHALL BE FREE OF POLLUTANT MATERIALS AND WEED SEED.

L. HYDROSEEDING SHALL CONFORM TO THE PROVISIONS OF SECTION 20, EROSION CONTROL AND HIGHWAY PLANTING", OF THE STANDARD SPECIFICATIONS OF THE STATE OF CALIFORNIA DEPARTMENT OF TRANSPORTATION, AS LAST REVISED.

M. A DISPERSING AGENT MAY BE ADDED TO THE HYDROSEEDING MATERIAL, PROVIDED THAT THE CONTRACTOR FURNISHES SUITABLE EVIDENCE THAT THE ADDITIVE WILL NOT ADVERSELY AFFECT THE PERFORMANCE OF THE SEEDING MIXTURE.

N. STABILIZATION MATERIALS SHALL BE APPLIED AS SOON AS PRACTICABLE AFTER COMPLETION OF GRADING OPERATIONS AND PRIOR TO THE ONSET OF WINTER RAINS, OR AT SUCH OTHER TIME AS DIRECTED BY THE COUNTY ENGINEER. THE MATERIAL SHALL BE APPLIED BEFORE INSTALLATION OF OTHER LANDSCAPING MATERIALS SUCH AS TREES, SHRUBS AND GROUND COVERS.

O. THE STABILIZATION MATERIAL SHALL BE APPLIED WITHIN 4-HOURS AFTER MIXING. MIXED MATERIAL NOT USED WITHIN 4-HOURS SHALL BE REMOVED FROM THE SITE.

P. THE CONTRACTOR SHALL MAINTAIN THE SOIL STABILIZATION MATERIAL AFTER PLACEMENT. THE COUNTY ENGINEER MAY REQUIRE SPRAY APPLICATION OF WATER OR OTHER MAINTENANCE ACTIVITIES TO ASSURE THE EFFECTIVENESS OF THE STABILIZATION PROCESS. APPLICATION OF WATER SHALL BE ACCOMPLISHED USING NOZZLES THAT PRODUCE A SPRAY THAT DOES NOT CONCENTRATE OR WASH AWAY THE STABILIZATION MATERIALS.

15. CLEANUP

THE CONTRACTOR MUST MAINTAIN THE SITE CLEAN, SAFE AND IN USABLE CONDITION. ANY SPILLS OF SOIL, ROCK OR CONSTRUCTION MATERIAL MUST BE REMOVED FROM THE SITE BY THE CONTRACTOR DURING CONSTRUCTION AND UPON COMPLETION OF THE PROJECT. COST FOR THIS ITEM OF WORK SHALL BE INCLUDED IN THE EXCAVATION AND COMPACTION ITEM AND NO ADDITIONAL COMPENSATION SHALL BE ALLOWED.

NOTE:
THESE NOTES ARE INTENDED TO BE USED AS A GENERAL GUIDELINE. THE REFERENCED SOILS REPORT FOR THE PROJECT AND GOVERNING AGENCY GRADING ORDINANCE SHALL SUPERSEDE THESE NOTES. THE SOILS ENGINEER MAY MAKE ON-SITE RECOMMENDATIONS DURING GRADING OPERATIONS.

REGISTERED PROFESSIONAL ENGINEER
PETER CARLINO
No. C79555
CIVIL
STATE OF CALIFORNIA
ORIGINAL SIGNATURES IN BLUE INK

LEA & BRAZE ENGINEERING, INC.
CIVIL ENGINEERS | LAND SURVEYORS
MAIN OFFICE:
2495 INDUSTRIAL PKWY WEST
HAYWARD, CALIFORNIA 94545
(510) 887-4086
REGIONAL OFFICES:
ROSEVILLE
DUBLIN
SAN JOSE
WWW.LEABRAZE.COM

OCEGUERA RESIDENCE
13115 UVAS ROAD
MORGAN HILL, CALIFORNIA
APN: 756-19-021
756-19-017
SANTA CLARA COUNTY

GRADING SPECIFICATIONS

REVISIONS	BY
-	-
-	-
-	-
-	-
-	-

JOB NO: 2211012
DATE: 06-15-21
SCALE: NO SCALE
DESIGN BY: RDD
CHECKED BY: TB
SHEET NO:
C-5.0
13 OF 16 SHEETS

PLAN # ______
SHEET ______ OF ______

PURPOSE:

THE PURPOSE OF THIS PLAN IS TO STABILIZE THE SITE TO PREVENT EROSION OF GRADED AREAS AND TO PREVENT SEDIMENTATION FROM LEAVING THE CONSTRUCTION AREA AND AFFECTING NEIGHBORING SITES, NATURAL AREAS, PUBLIC FACILITIES OR ANY OTHER AREA THAT MIGHT BE AFFECTED BY SEDIMENTATION. ALL MEASURES SHOWN ON THIS PLAN SHOULD BE CONSIDERED THE MINIMUM REQUIREMENTS NECESSARY. SHOULD FIELD CONDITIONS DICTATE ADDITIONAL MEASURES, SUCH MEASURES SHALL BE PER CALIFORNIA REGIONAL WATER QUALITY CONTROL BOARD'S FIELD MANUAL FOR EROSION AND SEDIMENTATION CONTROL AND THE CALIFORNIA STORM WATER QUALITY ASSOCIATION BEST MANAGEMENT PRACTICES HANDBOOK FOR CONSTRUCTION. LEA & BRAZE ENGINEERING SHOULD BE NOTIFIED IMMEDIATELY SHOULD CONDITIONS CHANGE.

EROSION CONTROL NOTES:

1. IT SHALL BE THE OWNER'S/CONTRACTOR'S RESPONSIBILITY TO MAINTAIN CONTROL OF THE ENTIRE CONSTRUCTION OPERATION AND TO KEEP THE ENTIRE SITE IN COMPLIANCE WITH THIS EROSION CONTROL PLAN.
2. THE INTENTION OF THIS PLAN IS FOR INTERIM EROSION AND SEDIMENT CONTROL ONLY. ALL EROSION CONTROL MEASURES SHALL CONFORM TO CALIFORNIA REGIONAL WATER QUALITY CONTROL BOARD'S FIELD MANUAL FOR EROSION AND SEDIMENTATION CONTROL, THE CALIFORNIA STORM WATER QUALITY ASSOCIATION BEST MANAGEMENT PRACTICES HANDBOOK FOR CONSTRUCTION, AND THE LOCAL GOVERNING AGENCY FOR THIS PROJECT.
3. OWNER/CONTRACTOR SHALL BE RESPONSIBLE FOR MONITORING EROSION AND SEDIMENT CONTROL MEASURES PRIOR TO, DURING, AND AFTER STORM EVENTS. PERSON IN CHARGE OF MAINTAINING EROSION CONTROL MEASURES SHOULD WATCH LOCAL WEATHER REPORTS AND ACT APPROPRIATELY TO MAKE SURE ALL NECESSARY MEASURES ARE IN PLACE.
4. SANITARY FACILITIES SHALL BE MAINTAINED ON THE SITE AT ALL TIMES.
5. DURING THE RAINY SEASON, ALL PAVED AREAS SHALL BE KEPT CLEAR OF EARTH MATERIAL AND DEBRIS. THE SITE SHALL BE MAINTAINED SO AS TO MINIMIZE SEDIMENT-LADEN RUNOFF TO ANY STORM DRAINAGE SYSTEM, INCLUDING EXISTING DRAINAGE SWALES AND WATERCOURSES.
6. CONSTRUCTION OPERATIONS SHALL BE CARRIED OUT IN SUCH A MANNER THAT EROSION AND WATER POLLUTION WILL BE MINIMIZED. COMPLIANCE WITH FEDERAL, STATE AND LOCAL LAWS CONCERNING POLLUTION SHALL BE MAINTAINED AT ALL TIMES.
7. CONTRACTOR SHALL PROVIDE DUST CONTROL AS REQUIRED BY THE APPROPRIATE FEDERAL, STATE AND LOCAL AGENCY REQUIREMENTS.
8. ALL MATERIALS NECESSARY FOR THE APPROVED EROSION CONTROL MEASURES SHALL BE IN PLACE BY OCTOBER 15TH.
9. EROSION CONTROL SYSTEMS SHALL BE INSTALLED AND MAINTAINED THROUGHOUT THE RAINY SEASON, OR FROM OCTOBER 15TH THROUGH APRIL 15TH, WHICHEVER IS LONGER.
10. IN THE EVENT OF RAIN, ALL GRADING WORK IS TO CEASE IMMEDIATELY AND THE SITE IS TO BE SEALED IN ACCORDANCE WITH THE APPROVAL EROSION CONTROL MEASURES AND APPROVED EROSION CONTROL PLAN.
11. THE CONTRACTOR SHALL BE RESPONSIBLE FOR CHECKING AND REPAIRING EROSION CONTROL SYSTEMS AFTER EACH STORM.
12. ADDITIONAL EROSION CONTROL MEASURES MAY BE REQUIRED BY LOCAL JURISDICTION'S ENGINEERING DEPARTMENT OR BUILDING OFFICIALS.
13. MEASURES SHALL BE TAKEN TO COLLECT OR CLEAN ANY ACCUMULATION OR DEPOSIT OF DIRT, MUD, SAND, ROCKS, GRAVEL OR DEBRIS ON THE SURFACE OF ANY STREET, ALLEY OR PUBLIC PLACE OR IN ANY PUBLIC STORM DRAIN SYSTEMS. THE REMOVAL OF AFORESAID SHALL BE DONE BY STREET SWEEPING OR HAND SWEEPING. WATER SHALL NOT BE USED TO WASH SEDIMENTS INTO PUBLIC OR PRIVATE DRAINAGE FACILITIES.
14. EROSION CONTROL MEASURES SHALL BE ON-SITE FROM SEPTEMBER 15TH THRU APRIL 15TH.
15. ALL EROSION CONTROL MEASURES SHALL BE INSTALLED AND MAINTAINED THROUGHOUT THE RAINY SEASON OR FROM OCTOBER 15 THROUGH APRIL 15, WHICHEVER IS GREATER.
16. PLANS SHALL BE DESIGNED TO MEET C3 REQUIREMENTS OF THE MUNICIPAL STORMWATER REGIONAL PERMIT("MRP") NPDES PERMIT CAS 612008.
17. THE CONTRACTOR TO NPDES (NATIONAL POLLUTION DISCHARGE ELIMINATION SYSTEM) BEST MANAGEMENT PRACTICES (BMP) FOR SEDIMENTATION PREVENTION AND EROSION CONTROL TO PREVENT DELETERIOUS MATERIALS OR POLLUTANTS FROM ENTERING THE TOWN OR COUNTY STORM DRAIN SYSTEMS.
18. THE CONTRACTOR MUST INSTALL ALL EROSION AND SEDIMENT CONTROL MEASURES PRIOR TO THE INCEPTION OF ANY WORK ONSITE AND MAINTAIN THE MEASURES UNTIL THE COMPLETION OF ALL LANDSCAPING.
19. THE CONTRACTOR SHALL MAINTAIN ADJACENT STREETS IN A NEAT, CLEAN DUST FREE AND SANITARY CONDITION AT ALL TIMES AND TO THE SATISFACTION OF THE TOWN INSPECTOR. THE ADJACENT STREET SHALL AT ALL TIMES BE KEPT CLEAN OF DEBRIS, WITH DUST AND OTHER NUISANCE BEING CONTROLLED AT ALL TIMES. THE CONTRACTOR BE RESPONSIBLE FOR ANY CLEAN UP ON ADJACENT STREETS AFFECTED BY THE BY THEIR CONSTRUCTION, METHOD OF STREET CLEANING SHALL BE BY DRY SWEEPING OF ALL PAVED AREAS. NO STOCKPILING OF BUILDING MATERIALS WITHIN THE TOWN RIGHT-OF-WAY.
20. SEDIMENTS AND OTHER MATERIALS SHALL NOT BE TRACKED FROM THE SITE BY VEHICLE TRAFFIC. THE CONTRACTOR SHALL INSTALL A STABILIZED CONSTRUCTION ENTRANCE PRIOR TO THE INSPECTION OF ANY WORK ONSITE AND MAINTAIN IT FOR THE DURATION OF THE CONSTRUCTION PROCESS SO AS TO NOT INHIBIT SEDIMENTS FROM BEING DEPOSITED INTO THE PUBLIC RIGHT-OF-WAY UNTIL THE COMPLETION OF ALL LANDSCAPING.
21. THE CONTRACTOR SHALL PROTECT DOWN SLOPE DRAINAGE COURSES, STREAMS AND STORM DRAINS WITH ROCK FILLED SAND BAGS, TEMPORARY SWALES, SILT FENCES, AND EARTH PERMS IN CONJUNCTION OF ALL LANDSCAPING.
22. STOCKPILED MATERIALS SHALL BE COVERED WITH VISQUEEN OR A TARPAULIN UNTIL THE MATERIAL IS REMOVED FROM THE SITE. ANY REMAINING BARE SOIL THAT EXISTS AFTER THE STOCKPILE HAS BEEN REMOVED SHALL BE COVERED UNTIL A NATURAL GROUND COVER IS ESTABLISHED OR IT IS SEEDED OR PLANTED TO PROVIDE GROUND COVER PRIOR TO THE FALL RAINY SEASON.
23. EXCESS OR WASTE CONCRETE MUST NOT BE WASHED INTO THE PUBLIC RIGHT-OF-WAYOR ANY OTHER DRAINAGE SYSTEM. PROVISIONS SHALL BE MADE TO RETAIN CONCRETE WASTES ON SITE UNTIL THEY CAN BE DISPOSED OF AS SOLID WASTE.
24. TRASH AND CONSTRUCTION RELATED SOLID WASTES MUST BE DEPOSITED INTO A COVERED RECEPTACLE TO PREVENT CONTAMINATION AND DISPERSAL BY WIND

EROSION CONTROL NOTES CONTINUED:

24. FUELS, OILS, SOLVENTS AND OTHER TOXIC MATERIALS MUST BE STORED IN ACCORDANCE WITH THEIR LISTING AND ARE NOT TO CONTAMINATE THE SOIL AND SURFACE WATERS. ALL APPROVED STORAGE CONTAINERS ARE TO BE PROTECTED FROM THE WEATHER. SPILLS MUST BE CLEANED UP IMMEDIATELY AND DISPOSED OF IN A PROPER MANNER. SPILLS MUST NOT BE WASHED INTO THE DRAINAGE SYSTEM,
25. DUST CONTROL SHALL BE DONE BY WATERING AND AS OFTEN AS REQUIRED BY THE TOWN INSPECTOR.
26. SILT FENCE(S) AND/OR FIBER ROLL(S) SHALL BE INSTALLED PRIOR TO SEPTEMBER 15TH AND SHALL REMAIN IN PLACE UNTIL THE LANDSCAPING GROUND COVER IS INSTALLED. CONTRACTOR SHALL CONTINUOUSLY MONITOR THESE MEASURES, FOLLOWING AND DURING ALL RAIN EVENTS,TO PUBLIC OWNED FACILITIES.

EROSION CONTROL MEASURES:

1. THE FACILITIES SHOWN ON THIS PLAN ARE DESIGNED TO CONTROL EROSION AND SEDIMENT DURING THE RAINY SEASON, OCTOBER 15TH TO APRIL 15. EROSION CONTROL FACILITIES SHALL BE IN PLACE PRIOR TO OCTOBER 15TH OF ANY YEAR. GRADING OPERATIONS DURING THE RAINY SEASON WHICH LEAVE DENUDED SLOPES SHALL BE PROTECTED WITH EROSION CONTROL MEASURES IMMEDIATELY FOLLOWING GRADING ON THE SLOPES.
2. SITE CONDITIONS AT TIME OF PLACEMENT OF EROSION CONTROL MEASURES WILL VARY. APPROPRIATE ACTION INCLUDING TEMPORARY SWALES, INLETS, HYDROSEEDING, STRAW BALES, ROCK SACKS, ETC. SHALL BE TAKEN TO PREVENT EROSION AND SEDIMENTATION FROM LEAVING SITE. EROSION CONTROL MEASURES SHALL BE ADJUSTED AS THE CONDITIONS CHANGE AND THE NEED OF CONSTRUCTION SHIFT.
3. CONSTRUCTION ENTRANCES SHALL BE INSTALLED PRIOR TO COMMENCEMENT OF GRADING. ALL CONSTRUCTION TRAFFIC ENTERING ONTO THE PAVED ROADS MUST CROSS THE STABILIZED CONSTRUCTION ENTRANCES. CONTRACTOR SHALL MAINTAIN STABILIZED ENTRANCE AT EACH VEHICLE ACCESS POINT TO EXISTING PAVED STREETS. ANY MUD OR DEBRIS TRACKED ONTO PUBLIC STREETS SHALL BE REMOVED DAILY AND AS REQUIRED BY THE GOVERNING AGENCY.
4. ALL EXPOSED SLOPES THAT ARE NOT VEGETATED SHALL BE HYDROSEEDED. IF HYDROSEEDING IS NOT USED OR IS NOT EFFECTIVE BY OCTOBER 15, THEN OTHER IMMEDIATE METHODS SHALL BE IMPLEMENTED, SUCH AS EROSION CONTROL BLANKETS, OR A THREE-STEP APPLICATION OF 1) SEED, MULCH, FERTILIZER 2) BLOWN STRAW 3) TACKIFIER AND MULCH. HYDROSEEDING SHALL BE IN ACCORDANCE WITH THE PROVISIONS OF SECTION 20" EROSION CONTROL AND HIGHWAY PLANTING" OF THE STANDARD SPECIFICATION OF THE STATE OF CALIFORNIA DEPARTMENT OF TRANSPORTATION, AS LAST REVISED. REFER TO THE EROSION CONTROL SECTION OF THE GRADING SPECIFICATIONS THAT ARE A PART OF THIS PLAN SET FOR FURTHER INFORMATION.
5. INLET PROTECTION SHALL BE INSTALLED AT OPEN INLETS TO PREVENT SEDIMENT FROM ENTERING THE STORM DRAIN SYSTEM. INLETS NOT USED IN CONJUNCTION WITH EROSION CONTROL ARE TO BE BLOCKED TO PREVENT ENTRY OF SEDIMENT. MINIMUM INLET PROTECTION SHALL CONSIST OF A ROCK SACKS OR AS SHOWN ON THIS PLAN
6. THIS EROSION AND SEDIMENT CONTROL PLAN MAY NOT COVER ALL THE SITUATIONS THAT MAY ARISE DURING CONSTRUCTION DUE TO UNANTICIPATED FIELD CONDITIONS. VARIATIONS AND ADDITIONS MAY BE MADE TO THIS PLAN IN THE FIELD. A REPRESENTATIVE OF LEA & BRAZE ENGINEERING SHALL PERFORM A FIELD REVIEW AND MAKE RECOMMENDATIONS AS NEEDED. CONTRACTOR IS RESPONSIBLE TO NOTIFY LEA & BRAZE ENGINEERING AND THE GOVERNING AGENCY OF ANY CHANGES.
7. THE EROSION CONTROL MEASURES SHALL CONFORM TO THE LOCAL JURISDICTION'S STANDARDS AND THE APPROVAL OF THE LOCAL JURISDICTION'S ENGINEERING DEPARTMENT.
8. STRAW ROLLS SHALL BE PLACED AT THE TOE OF SLOPES AND ALONG THE DOWN SLOPE PERIMETER OF THE PROJECT. THEY SHALL BE PLACED AT 25 FOOT INTERVALS ON GRADED SLOPES. PLACEMENT SHALL RUN WITH THE CONTOURS AND ROLLS SHALL BE TIGHTLY END BUTTED. CONTRACTOR SHALL REFER TO MANUFACTURES SPECIFICATIONS FOR PLACEMENT AND INSTALLATION INSTRUCTIONS.

REFERENCES:

1. CALIFORNIA REGIONAL WATER QUALITY CONTROL BOARD'S FIELD MANUAL FOR EROSION AND SEDIMENTATION CONTROL
2. CALIFORNIA STORM WATER QUALITY ASSOCIATION BEST MANAGEMENT PRACTICES HANDBOOK FOR CONSTRUCTION

PERIODIC MAINTENANCE:

1. MAINTENANCE IS TO BE PERFORMED AS FOLLOWS:
   - A. DAMAGES CAUSED BY SOIL EROSION OR CONSTRUCTION SHALL BE REPAIRED AT THE END OF EACH WORKING DAY.
   - B. SWALES SHALL BE INSPECTED PERIODICALLY AND MAINTAINED AS NEEDED.
   - C. SEDIMENT TRAPS, BERMS, AND SWALES ARE TO BE INSPECTED AFTER EACH STORM AND REPAIRS MADE AS NEEDED.
   - D. SEDIMENT SHALL BE REMOVED AND SEDIMENT TRAP RESTORED TO ITS ORIGINAL DIMENSIONS WHEN SEDIMENT HAS ACCUMULATED TO A DEPTH OF 1' FOOT.
   - E. SEDIMENT REMOVED FROM TRAP SHALL BE DEPOSITED IN A SUITABLE AREA AND IN SUCH A MANNER THAT IT WILL NOT ERODE.
   - F. RILLS AND GULLIES MUST BE REPAIRED.
2. GRAVEL BAG INLET PROTECTION SHALL BE CLEANED OUT WHENEVER SEDIMENT DEPTH IS ONE HALF THE HEIGHT OF ONE GRAVEL BAG.
3. STRAW ROLLS SHALL BE PERIODICALLY CHECKED TO ASSURE PROPER FUNCTION AND CLEANED OUT WHENEVER THE SEDIMENT DEPTH REACHED HALF THE HEIGHT OF THE ROLL.
4. SILT FENCE SHALL BE PERIODICALLY CHECKED TO ASSURE PROPER FUNCTION AND CLEANED OUT WHENEVER THE SEDIMENT DEPTH REACHES ONE FOOT IN HEIGHT.
5. CONSTRUCTION ENTRANCE SHALL BE REGRAVELED AS NECESSARY FOLLOWING SILT/SOIL BUILDUP.
6. ANY OTHER EROSION CONTROL MEASURES SHOULD BE CHECKED AT REGULAR INTERVALS TO ASSURE PROPER FUNCTION

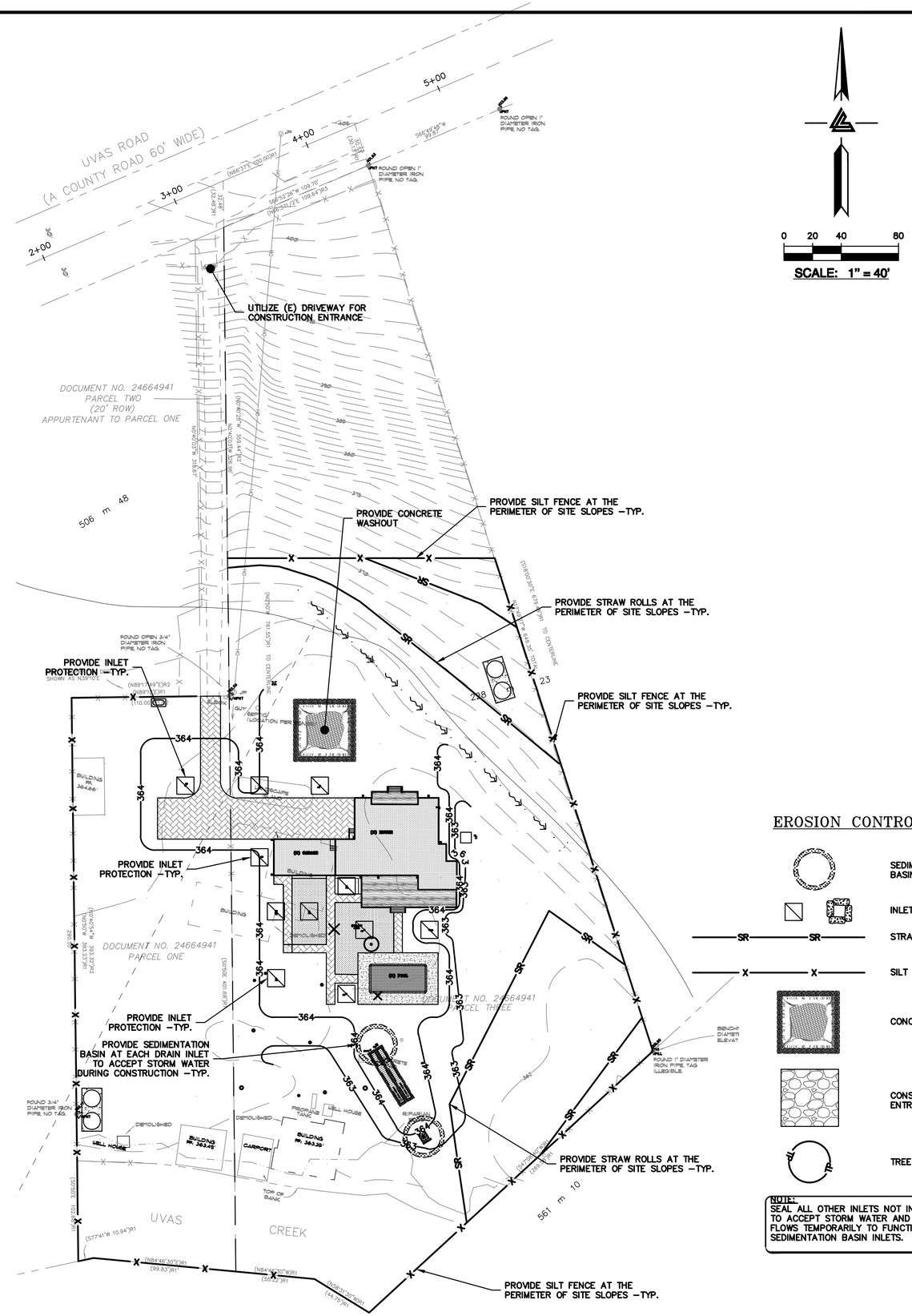

EROSION CONTROL LEGEND

- SEDIMENTATION BASIN
- INLET PROTECTION
- STRAW ROLL
- SILT FENCE
- CONCRETE WASHOUT
- CONSTRUCTION ENTRANCE
- TREE PROTECTION

NOTE:
SEAL ALL OTHER INLETS NOT INTENDED TO ACCEPT STORM WATER AND DIRECT FLOWS TEMPORARILY TO FUNCTIONAL SEDIMENTATION BASIN INLETS. -TYP

REGISTERED PROFESSIONAL ENGINEER
PETER CARLANO
No. C79559
CIVIL
STATE OF CALIFORNIA
ORIGINAL SIGNATURES IN BLUE INK

LEA & BRAZE ENGINEERING, INC.
CIVIL ENGINEERS | LAND SURVEYORS
MAIN OFFICE:
2495 INDUSTRIAL PKWY WEST
HAYWARD, CALIFORNIA 94545
(510) 887-4086
REGIONAL OFFICES:
ROSEVILLE
DUBLIN
SAN JOSE
WWW.LEABRAZE.COM

OCEGUERA RESIDENCE
13115 UVAS ROAD
MORGAN HILL, CALIFORNIA

APN: 756-19-021
756-19-017

SANTA CLARA COUNTY

EROSION CONTROL PLAN

REVISIONS	BY
-	-
-	-
-	-
-	-
-	-

JOB NO:	2211012
DATE:	06-15-21
SCALE:	1" = 40'
DESIGN BY:	RDD
CHECKED BY:	TB
SHEET NO:	ER-1

3 Stabilized Construction Entrance/Exit

CASQA Detail TC-1

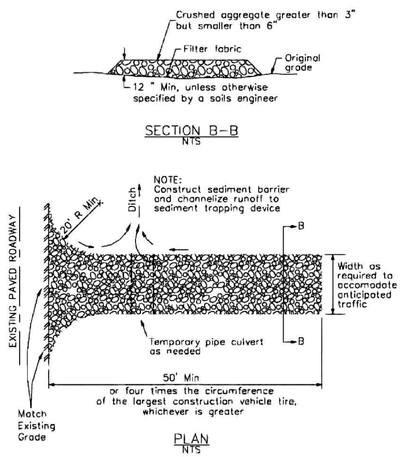

1 Silt Fence

CASQA Detail SE-1

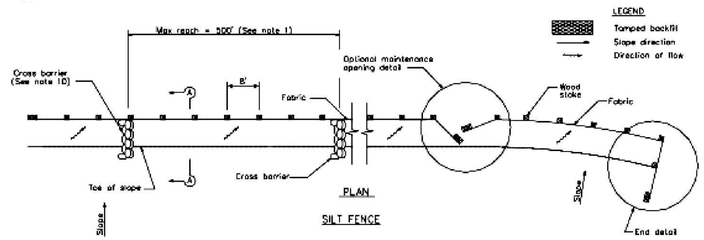

NOTES

1. Construct the length of each reach so that the change in base elevation along the reach does not exceed 1/3 the height of the linear barrier, in no case shall the reach length exceed 500'.
2. The last 8'–0" of fence shall be turned up slope.
3. Stake dimensions are nominal.
4. Dimension may vary to fit field condition.
5. Stakes shall be spaced at 8'–0" maximum and shall be positioned on downstream side of fence.
6. Stakes to overlap and fence fabric to fold around each stake one full turn. Secure fabric to stake with 4 staples.
7. Stakes shall be driven tightly together to prevent potential flow–through of sediment at joint. The tops of the stakes shall be secured with wire.
8. For end stake, fence fabric shall be folded around two stakes one full turn and secured with 4 staples
9. Minimum 4 staples per stake. Dimensions shown are typical.
10. Cross barriers shall be a minimum of 1/3 and a maximum of 1/2 the height of the linear barrier.
11. Maintenance openings shall be constructed in a manner to ensure sediment remains behind silt fence.
12. Joining sections shall not be placed at sump locations.
13. Sandbag rows and layers shall be offset to eliminate gaps.

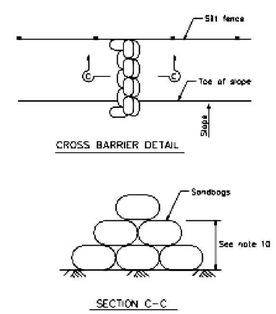

4 Velocity Dissipation Devices

CASQA Detail EC-10

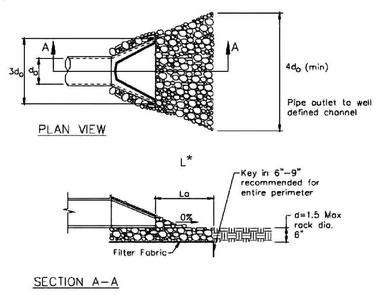

* Length per ABAG Design Standards

2 Silt Fence

CASQA Detail SE-1

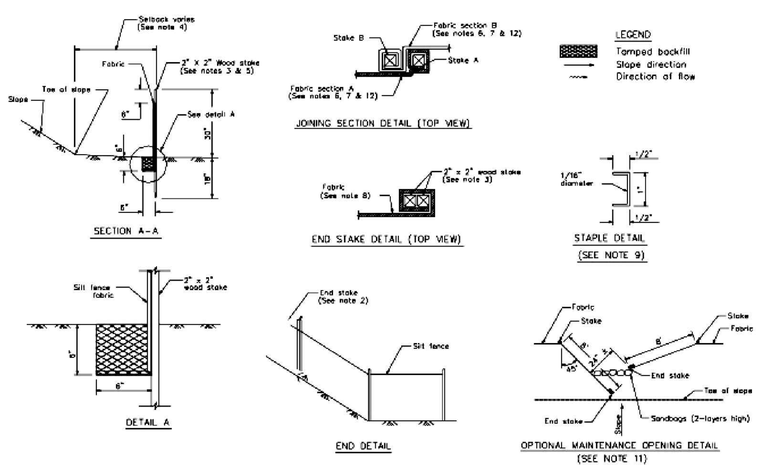

Source for Graphics: California Stormwater BMP Handbook, California Stormwater Quality Association, January 2003.
Available from www.cabmphandbooks.com.

STANDARD BEST MANAGEMENT PRACTICE NOTES

1. Solid and Demolition Waste Management: Provide designated waste collection areas and containers on site away from streets, gutters, storm drains, and waterways, and arrange for regular disposal. Waste containers must be watertight and covered at all times except when waste is deposited. Refer to Erosion & Sediment Control Field Manual, 4th Edition (page C3) or latest.
2. Hazardous Waste Management: Provide proper handling and disposal of hazardous wastes by a licensed hazardous waste material hauler. Hazardous wastes shall be stored and properly labeled in sealed containers constructed of suitable materials. Refer to Erosion & Sediment Control Field Manual, 4th Edition (pages C-5 to C-6) or latest.
3. Spill Prevention and Control: Provide proper storage areas for liquid and solid materials, including chemicals and hazardous substances, away from streets, gutters, storm drains, and waterways. Spill control materials must be kept on site where readily accessible. Spills must be cleaned up immediately and contaminated soil disposed properly. Refer to Erosion & Sediment Control Field Manual, 4th Edition (pages C-7 to C-8, C-13 to C-14) or latest.
4. Vehicle and Construction Equipment Service and Storage: An area shall be designated for the maintenance, where on-site maintenance is required, and storage of equipment that is protected from stormwater run-on and runoff. Measures shall be provided to capture any waste oils, lubricants, or other potential pollutants and these wastes shall be properly disposed of off site. Fueling and major maintenance/repair, and washing shall be conducted off-site whenever feasible. Refer to Erosion & Sediment Control Field Manual, 4th Edition (page C9) or latest.
5. Material Delivery, Handling and Storage: In general, materials should not be stockpiled on site. Where temporary stockpiles are necessary and approved by the County, they shall be covered with secured plastic sheeting or tarp and located in designated areas near construction entrances and away from drainage paths and waterways. Barriers shall be provided around storage areas where materials are potentially in contact with runoff. Refer to Erosion & Sediment Control Field Manual, 4th Edition (pages C-11 to C-12) or latest.
6. Handling and Disposal of Concrete and Cement: When concrete trucks and equipment are washed on-site, concrete wastewater shall be contained in designated containers or in a temporary lined and watertight pit where wasted concrete can harden for later removal. If possible have concrete contractor remove concrete wash water from site. In no case shall fresh concrete be washed into the road right-of-way. Refer to Erosion & Sediment Control Field Manual, 4th Edition (pages C-15 to C-16) or latest.
7. Pavement Construction Management: Prevent or reduce the discharge of pollutants from paving operations, using measures to prevent run-on and runoff pollution and properly disposing of wastes. Avoid paving in the wet season and reschedule paving when rain is in the forecast. Residue from saw-cutting shall be vacuumed for proper disposal. Refer to Erosion & Sediment Control Field Manual, 4th Edition (pages C-17 to C-18) or latest.
8. Contaminated Soil and Water Management: Inspections to identify contaminated soils should occur prior to construction and at regular intervals during construction. Remediating contaminated soil should occur promptly after identification and be specific to the contaminant identified, which may include hazardous waste removal. Refer to Erosion & Sediment Control Field Manual, 4th Edition (pages C-19 to C-20) or latest.
9. Sanitary/Septic Water Management: Temporary sanitary facilities should be located away from drainage paths, waterways, and traffic areas. Only licensed sanitary and septic waste haulers should be used. Secondary containment should be provided for all sanitary facilities. Refer to Erosion & Sediment Control Field Manual, 4th Edition (page C-21) or latest.
10. Inspection & Maintenance: Areas of material and equipment storage sites and temporary sanitary facilities must be inspected weekly. Problem areas shall be identified and appropriate additional and/or alternative control measures implemented immediately, within 24 hours of the problem being identified.

STANDARD EROSION CONTROL NOTES

1. Sediment Control Management:

   Tracking Prevention & Clean Up: Activities shall be organized and measures taken as needed to prevent or minimize tracking of soil onto the public street system. A gravel or proprietary device construction entrance/exit is required for all sites. Clean up of tracked material shall be provided by means of a street sweeper prior to an approaching rain event, or at least once at the end of each workday that material is tracked, or, more frequently as determined by the County Inspector. Refer to Erosion & Sediment Control Field Manual, 4th Edition (pages B-31 to B-33) or latest.

   Storm Drain Inlet and Catch Basin Inlet Protection: All inlets within the vicinity of the project and within the project limits shall be protected with gravel bags placed around inlets or other inlet protection. At locations where exposed soils are present, staked fiber rolos or staked silt fences can be used. Inlet filters are not allowed due to clogging and subsequent flooding. Refer to Erosion & Sediment Control Field Manual, 4th Edition (pages B-49 to B-51) or latest.

   Storm Water Runoff: No storm water runoff shall be allowed to drain in to the existing and/or proposed underground storm drain system or other above ground watercourses until appropriate erosion control measures are fully installed.

   Dust Control: The contractor shall provide dust control in graded areas as required by providing wet suppression or chemical stabilization of exposed soils, providing for rapid clean up of sediments deposited on paved roads, furnishing construction road entrances and vehicle wash down areas, and limiting the amount of areas disturbed by clearing and earth moving operations by scheduling these activities in phases.

   Stockpiling: Excavated soils shall not be placed in streets or on paved areas. Borrow and temporary stockpiles shall be protected with appropriate erosion control measures(tarps, straw bales, silt fences, ect.) to ensure silt does not leave the site or enter the storm drain system or neighboring watercourse.
2. Erosion Control: During the rainy season, all disturbed areas must include an effective combination of erosion and sediment control. It is required that temporary erosion control measures are applied to all disturbed soil areas prior to a rain event. During the non-rainy season, erosion control measures must be applied sufficient to control wind erosion at the site.
3. Inspection & Maintenance: Disturbed areas of the Project's site, locations where vehicles enter or exit the site, and all erosion and sediment controls that are identified as part of the Erosion Control Plans must be inspected by the Contractor before, during, and after storm events, and at least weekly during seasonal wet periods. Problem areas shall be identified and appropriate additional and/ or alternative control measures implemented immediately, within 24 hours of the problem being identified.
4. Project Completion: Prior to project completion and signoff by the County Inspector, all disturbed areas shall be reseeded, planted, or landscaped to minimize the potential for erosion on the subject site.
5. It shall be the Owner's/Contractor's responsibility to maintain control of the entire construction operation and to keep the entire site in compliance with the erosion control plan.
6. Erosion and sediment control best management practices shall be operable year round or until vegetation is fully established on landscaped surfaces.

Project Information

Best Management Practices and Erosion Control Details Sheet 1
County of Santa Clara

BMP-1

REGISTERED PROFESSIONAL ENGINEER
PETER CARLANO
No. C79559
CIVIL
STATE OF CALIFORNIA
ORIGINAL SIGNATURES IN BLUE INK

LEA & BRAZE ENGINEERING, INC.
CIVIL ENGINEERS | LAND SURVEYORS
MAIN OFFICE:
2495 INDUSTRIAL PKWY WEST
HAYWARD, CALIFORNIA 94545
(510) 887–4086
REGIONAL OFFICES:
ROSEVILLE
DUBLIN
SAN JOSE
WWW.LEABRAZE.COM

OCEGUERA RESIDENCE
13115 UVAS ROAD
MORGAN HILL,
CALIFORNIA
SANTA CLARA COUNTY
APN: 756–19–021
756–19–017

EROSION CONTROL DETAILS

REVISIONS	BY
–	–
–	–
–	–
–	–
–	–

JOB NO:	2211012
DATE:	06–15–21
SCALE:	NO SCALE
DESIGN BY:	RDD
CHECKED BY:	TB
SHEET NO:	BMP-1

7 Geotextiles and Mats

CASQA Detail EC-7

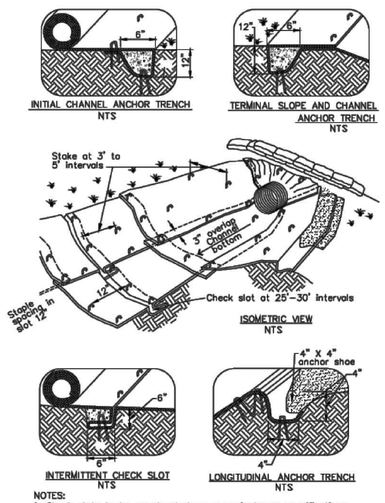

NOTES:
1. Check slots to be constructed per manufacturers specifications.
2. Staking or stapling layout per manufacturers specifications.
3. Install per manufacturer's recommendations

TYPICAL INSTALLATION DETAIL

5 Geotextiles and Mats

CASQA Detail EC-7

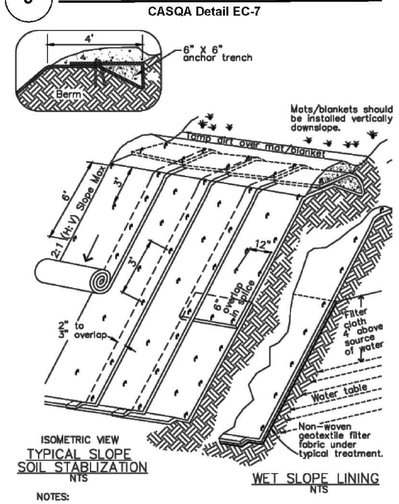

NOTES:
1. Slope surface shall be free of rocks, clods, sticks and grass. Mats/blankets shall have good soil contact.
2. Lay blankets loosely and stake or staple to maintain direct contact with the soil. Do not stretch.
3. Install per manufacturer's recommendations

TYPICAL INSTALLATION DETAIL

3 Entrance/Outlet Tire Wash

CASQA Detail TC-3

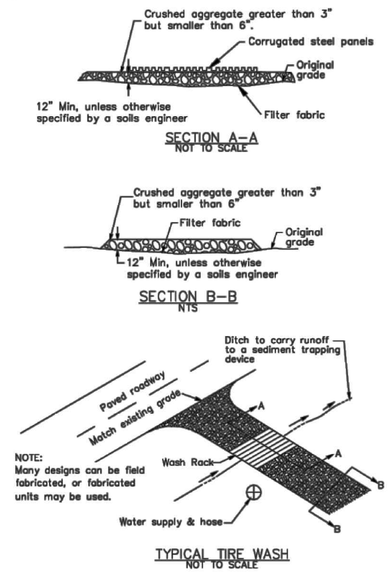

1 Fiber Rolls

CASQA Detail SE-5

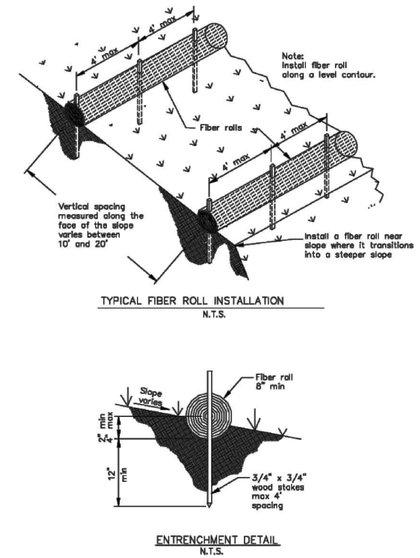

8 Storm Drain Inlet Protection

CASQA Detail SE-10

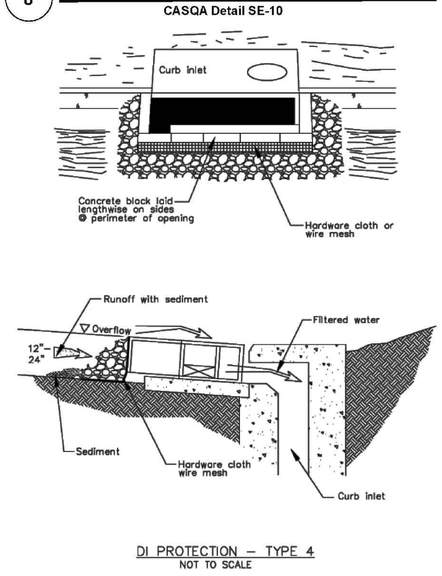

Source for Graphics: California Stormwater BMP Handbook, California Stormwater Quality Association, January 2003.
Available from www.cabmphandbooks.com.

6 Storm Drain Inlet Protection

CASQA Detail SE-10

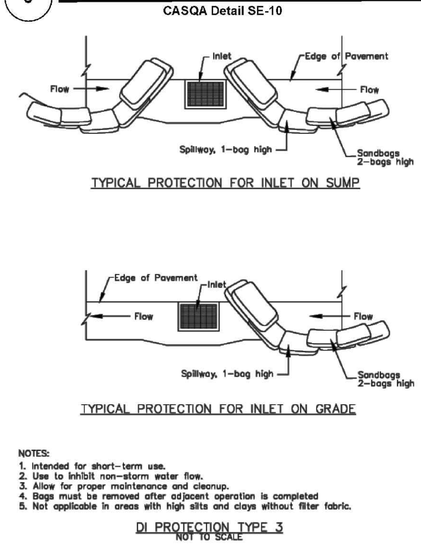

NOTES:
1. Intended for short–term use.
2. Use to inhibit non–storm water flow.
3. Allow for proper maintenance and cleanup.
4. Bags must be removed after adjacent operation is completed
5. Not applicable in areas with high silts and clays without filter fabric.

4 Storm Drain Inlet Protection

CASQA Detail SE-10

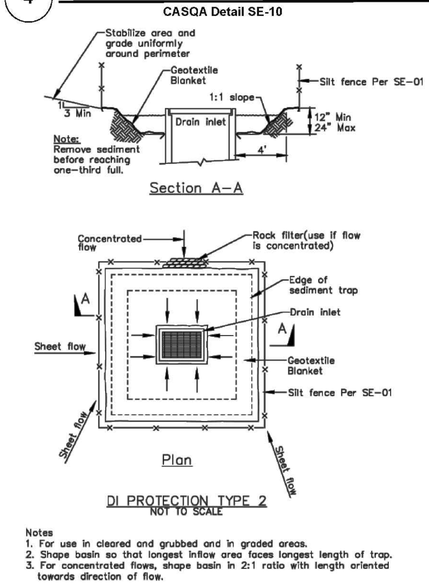

Notes
1. For use in cleared and grubbed and in graded areas.
2. Shape basin so that longest inflow area faces longest length of trap.
3. For concentrated flows, shape basin in 2:1 ratio with length oriented towards direction of flow.

2 Concrete Waste Management

CASQA Detail WM-8

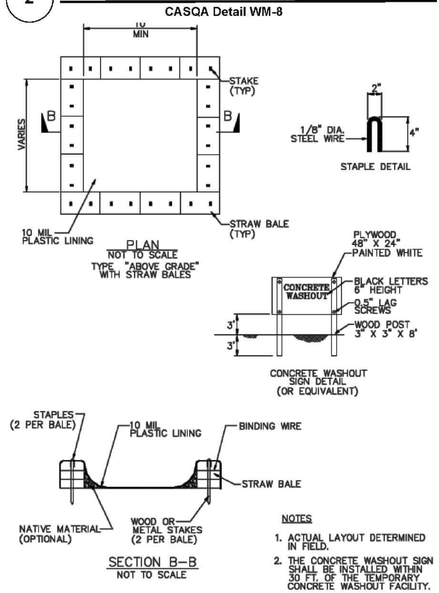

NOTES
1. ACTUAL LAYOUT DETERMINED IN FIELD.
2. THE CONCRETE WASHOUT SIGN SHALL BE INSTALLED WITHIN 30 FT. OF THE TEMPORARY CONCRETE WASHOUT FACILITY.

Best Management Practices and Erosion Control Details Sheet 2
County of Santa Clara

BMP-2

PLAN # ____ OF ____
SHEET

REGISTERED PROFESSIONAL ENGINEER
PETER CARLANO
No. C79555
CIVIL
STATE OF CALIFORNIA
ORIGINAL SIGNATURES IN BLUE INK

LEA & BRAZE ENGINEERING, INC.
CIVIL ENGINEERS | LAND SURVEYORS
MAIN OFFICE:
2495 INDUSTRIAL PKWY WEST
HAYWARD, CALIFORNIA 94545
(510) 887–4086
REGIONAL OFFICES:
ROSEVILLE
DUBLIN
SAN JOSE
WWW.LEABRAZE.COM

OCEGUERA RESIDENCE
13115 UVAS ROAD
MORGAN HILL, CALIFORNIA
SANTA CLARA COUNTY
APN: 756–19–021
756–19–017

EROSION CONTROL DETAILS

Project Information

REVISIONS	BY
–	–
–	–
–	–
–	–
–	–

JOB NO:	2211012
DATE:	06–15–21
SCALE:	NO SCALE
DESIGN BY:	RDD
CHECKED BY:	TB
SHEET NO:	BMP-2

16 OF 16 SHEETS

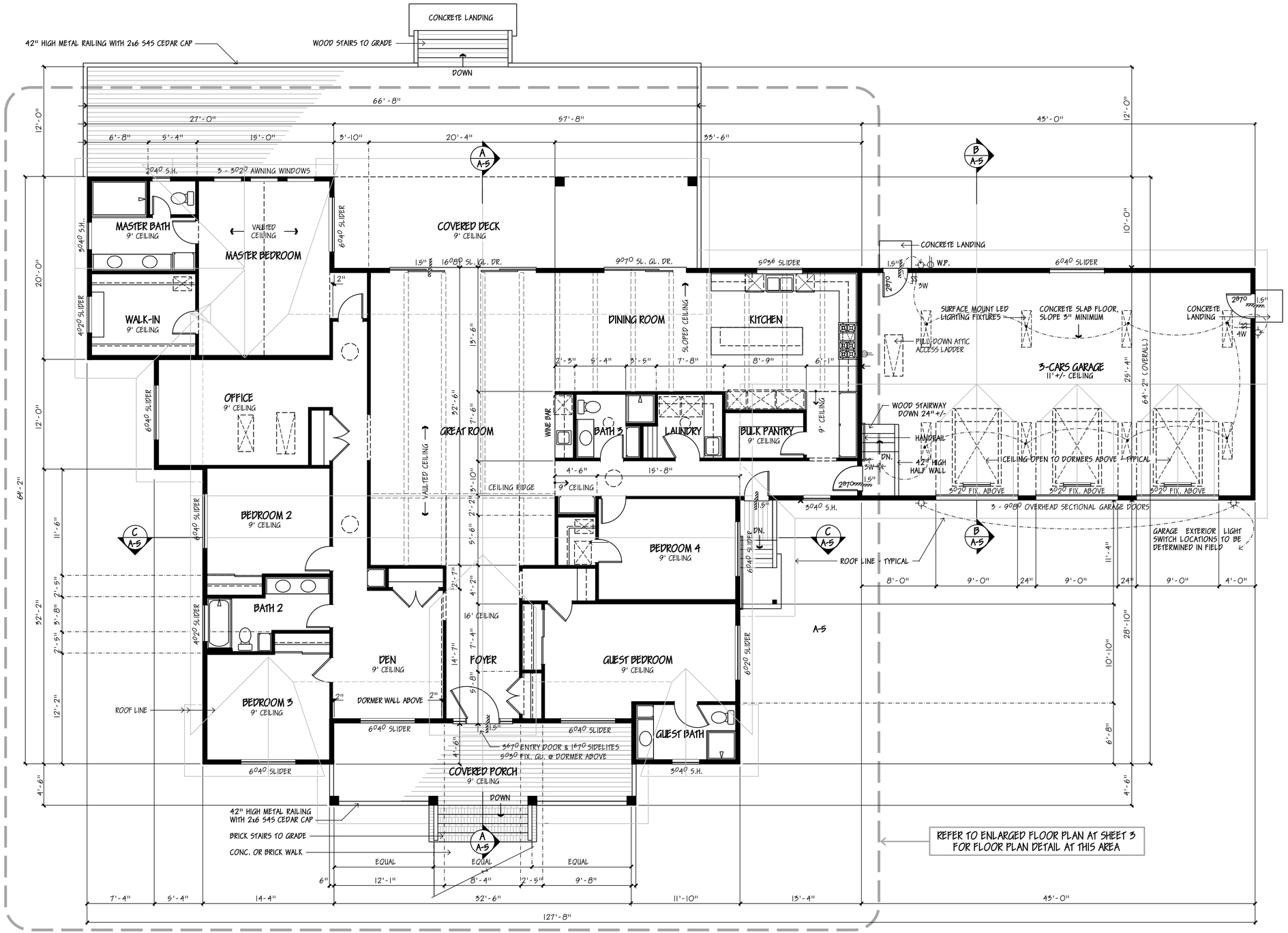

FLOOR PLAN - OVERALL

SCALE: 3/16" = 1'-0"

KEY:

A / 2	CROSS SECTION ID (TOP) SHEET NUMBER (BOTTOM)
1 / 2	DETAIL NUMBER (TOP) SHEET NUMBER (BOTTOM)
	DENOTES EXISTING WALL CONSTRUCTION REMAINS
	DENOTES EXISTING WALL TO BE REMOVED
	DENOTES NEW WALL OR INFILL OF (E) OPENING
	FLOOR LEVEL OR CEILING LEVEL CHANGE / STEP
+/-	APPROXIMATE DIMENSION
℄	CENTER LINE
C.O.	CLEAR OPENING
CONC.	CONCRETE
CSMT.	CASEMENT
D.H.	DOUBLE HUNG
D/W	DISHWASHER
DN	DOWN
D.	DOWN / DRYER
EA.	EACH
FIN.	FINISH / FINISHED
FIX.	FIXED
FLR.	FLOOR
F.S.	FACE OF STUD
GA.	GAUGE
GALV.	GALVANIZED
GL.	GLASS
G.S.M.	GALVANIZED SHEET METAL
GYP.	GYPSUM (GYPSUM BOARD)
HGHT.	HEIGHT
IN.	INCH / INCHES
LAV.	LAVATORY
LIN.	LINEN (CLOSET / CABINET)
MIN.	MINIMUM
O/	OVER
O/C	ON CENTER
O.H.	OVERHEAD / OVERHANG
ℙ	PLATE LINE / HEIGHT
PR.	PAIR
P. & SH.	POLE AND SHELF
REF.	REFRIGERATOR
RM.	ROOM
SH.	SHELF / SHELVES
SH.	SHOWER / SHOWERHEAD
S.H.	SINGLE HUNG
SL.	SLIDER / SLIDING
TYP.	TYPICAL
W/	WITH
W.	WASHER
W/C	WATER CLOSET
W.H.	WATER HEATER
	CEILING LIGHT FIXTURE
	STEM MOUNTED LIGHT
	RECESSED LIGHT FIXTURE
	EXHAUST FAN AND LIGHT COMBINATION
	EXHAUST FAN
	WALL MOUNTED LIGHT
	DUPLEX RECEPTACLE
	1/2 SWITCHED OUTLET
WP	WEATHERPROOF OUTLET
220	220 VOLT RECEPTACLE
	SINGLE SWITCH
3W	THREE-WAY SWITCH
4W	FOUR-WAY SWITCH
D.	DIMMER SWITCH
H.B.	HOSE-BIB
F.G.	FUEL GAS SUPPLY
TH.	THERMOSTAT
DET.	SM=SMOKE, CM=CARBON MONOXIDE DETECTOR

REVISIONS	BY

THESE PLANS ARE PREPARED UNDER THE DIRECTION AND RESPONSIBILITY OF THE PROPERTY OWNERS; ALEX AND DEE DEE OCEGUERA AND SHALL NOT BE DUPLICATED OR REPRODUCED WITHOUT THEIR EXPRESS WRITTEN CONSENT

ALEX OCEGUERA / DEE DEE OCEGUERA
EMAIL: OCEGUERA.ALEX@GMAIL.COM / DDOCEGUERA@GMAIL.COM PHONE (650) 400-2415

NEW SINGLE FAMILY RESIDENCE:

OCEGUERA RESIDENCE

MORGAN HILL, CALIFORNIA
SANTA CLARA COUNTY

13115 UVAS ROAD
APN: 756-19-017 AND 756-19-021

Date	01/03/22
Scale	---
Job	---
Drawn	---
Sheet:	A-1
Of: 6	Sheets

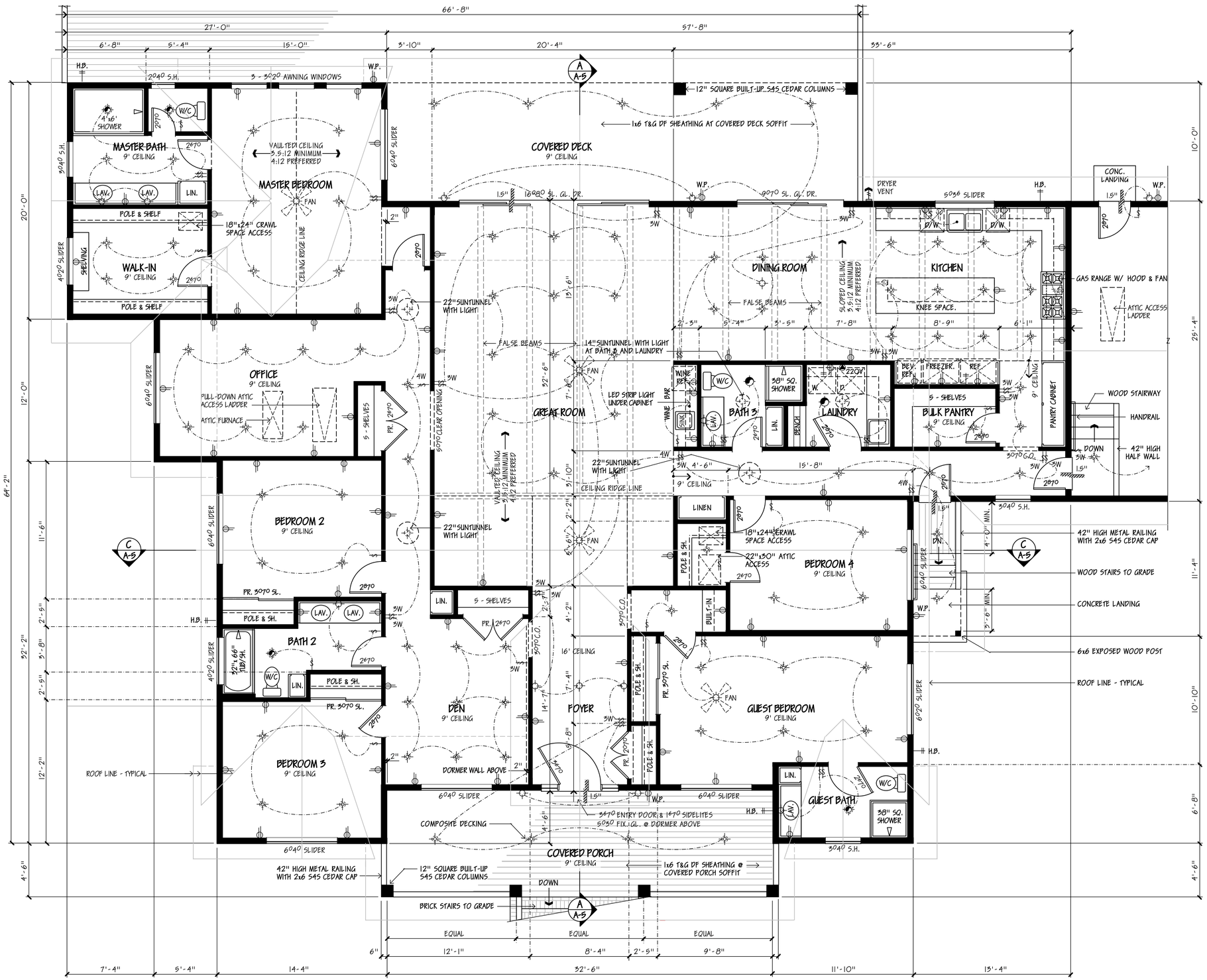

KEY:

- CROSS SECTION ID (TOP) / SHEET NUMBER (BOTTOM)
- DETAIL NUMBER (TOP) / SHEET NUMBER (BOTTOM)
- DENOTES EXISTING WALL CONSTRUCTION REMAINS
- DENOTES EXISTING WALL TO BE REMOVED
- DENOTES NEW WALL OR INFILL OF (E) OPENING
- FLOOR LEVEL OR CEILING LEVEL CHANGE / STEP
- +/- APPROXIMATE DIMENSION
- ℄ CENTER LINE
- C.O. CLEAR OPENING
- CONC. CONCRETE
- CSMT. CASEMENT
- D.H. DOUBLE HUNG
- D/W DISHWASHER
- DN DOWN
- D. DOWN / DRYER
- EA. EACH
- FIN. FINISH / FINISHED
- FIX. FIXED
- FLR. FLOOR
- F.S. FACE OF STUD
- GA. GAUGE
- GALV. GALVANIZED
- GL. GLASS
- G.S.M. GALVANIZED SHEET METAL
- GYP. GYPSUM (GYPSUM BOARD)
- HGHT. HEIGHT
- IN. INCH / INCHES
- LAV. LAVATORY
- LIN. LINEN (CLOSET / CABINET)
- MIN. MINIMUM
- O/ OVER
- O/C ON CENTER
- O.H. OVERHEAD / OVERHANG
- P. PLATE LINE / HEIGHT
- PR. PAIR
- P. & SH. POLE AND SHELF
- REF. REFRIGERATOR
- RM. ROOM
- SH. SHELF / SHELVES
- SH. SHOWER / SHOWERHEAD
- S.H. SINGLE HUNG
- SL. SLIDER / SLIDING
- TYP. TYPICAL
- W/ WITH
- W. WASHER
- W/C WATER CLOSET
- W.H. WATER HEATER
- CEILING LIGHT FIXTURE
- STEM MOUNTED LIGHT
- RECESSED LIGHT FIXTURE
- EXHAUST FAN AND LIGHT COMBINATION
- EXHAUST FAN
- WALL MOUNTED LIGHT
- DUPLEX RECEPTACLE
- 1/2 SWITCHED OUTLET
- WP WEATHERPROOF OUTLET
- 220 220 VOLT RECEPTACLE
- SINGLE SWITCH
- 3W THREE-WAY SWITCH
- 4W FOUR-WAY SWITCH
- D. DIMMER SWITCH
- H.B. HOSE-BIB
- F.G. FUEL GAS SUPPLY
- TH. THERMOSTAT
- DET. SM=SMOKE, CM=CARBON MONOXIDE DETECTOR

FLOOR PLAN - ENLARGED

SCALE: 1/4" =1'-0"

REVISIONS	BY

THESE PLANS ARE PREPARED UNDER THE DIRECTION AND RESPONSIBILITY OF THE PROPERTY OWNERS; ALEX AND DEE DEE OCEGUERA AND SHALL NOT BE DUPLICATED OR REPRODUCED WITHOUT THEIR EXPRESS WRITTEN CONSENT

ALEX OCEGUERA / DEE DEE OCEGUERA
EMAIL: OCEGUERA.ALEX@GMAIL.COM / DDOCEGUERA@GMAIL.COM PHONE (650) 400-2415

NEW SINGLE FAMILY RESIDENCE:

OCEGUERA RESIDENCE

MORGAN HILL, CALIFORNIA
SANTA CLARA COUNTY

13115 UVAS ROAD
APN: 756-19-017 AND 756-19-021

Date	01/03/22
Scale	---
Job	---
Drawn	---
Sheet:	A-2
Of:	6 Sheets

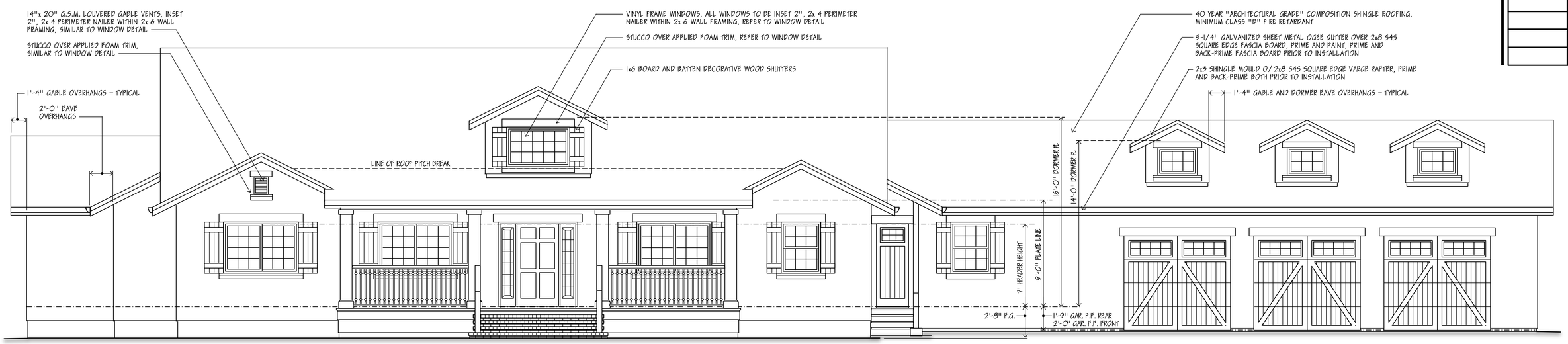

FRONT ELEVATION

SCALE: 1/4" =1'-0"

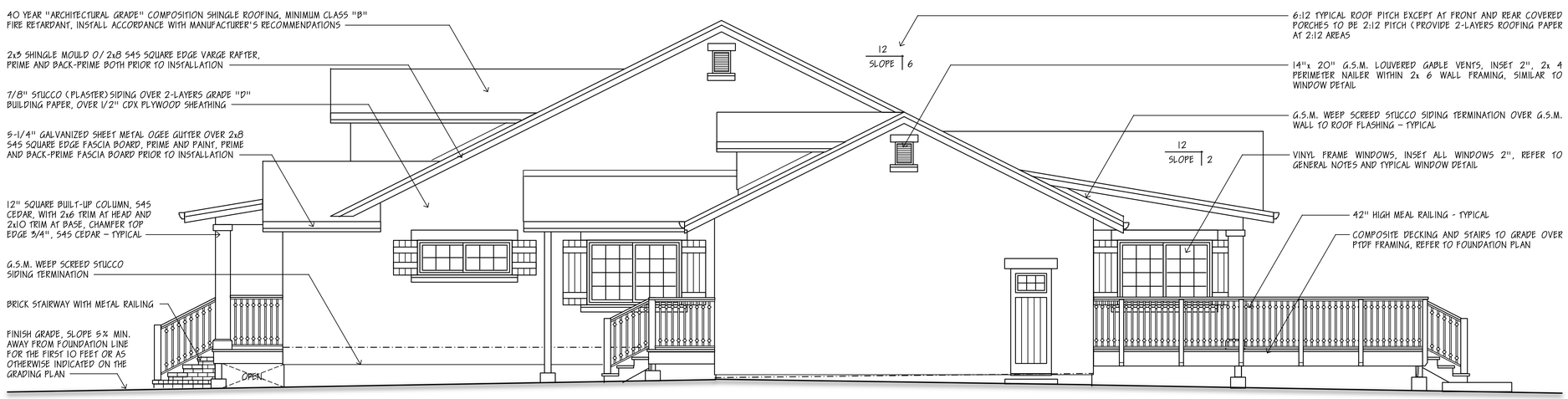

RIGHT SIDE ELEVATION

SCALE: 1/4" =1'-0"

GENERAL NOTES (CONTINUED):

INSULATION / WEATHER-STRIPPING:

1. PROVIDE INSULATION BAFFLES AT EAVE VENT LOCATIONS SUFFICIENT TO PREVENT OBSTRUCTION OF FREE AIR FLOW TO ATTIC SPACE, PROVIDE A MINIMUM OF 1" OF AIR SPACE BETWEEN THE INSULATION AND ROOF SHEATHING.
2. PROVIDE FIBERGLASS BATT INSULATION AT LEVELS INDICATED ON THE ENERGY COMPLIANCE DOCUMENTATION.
3. ANNULAR SPACES AROUND PIPES, ELECTRIC CABLES, CONDUITS OR OTHER OPENINGS IN BOTTOM/SOLE PLATES AT EXTERIOR WALLS SHALL BE PROTECTED AGAINST THE PASSAGE OF RODENTS BY CLOSING SUCH OPENINGS WITH CEMENT MORTAR, CONCRETE MASONRY OR SIMILAR ACCEPTAABLE METHOD. CRC R602.3.4.1.

HVAC / FLASHING / SHEETMETAL:

1. ENVIRONMENTAL AIR DUCT EXHAUST SHALL TERMINATE A MINIMUM OF 3 FEET AWAY FROM PROPERTY LINE AND ANY OPENINGS INTO THE BUILDING, AND 10 FEET FROM A FORCED AIR INLET (CMC 502.2).
2. BATHROOM EXHAUST FANS SHALL BE CONTROLLED BY A READILY ACCESSIBLE HUMIDISTAT, CONTROLS SHALL BE ADJUSTABLE BETWEEN A RELATIVE HUMIDITY RANGE OF 50 TO 80 PERCENT, FANS SHALL BE ENERGY STAR COMPLIANT AND BE DUCTED TO TERMINATE OUTSIDE THE BUILDING. INTERMITTENTLY OPERATED EXHAUST FANS SHALL BE RATED AT A MAXIMUM OF 3.0 SONE.
3. EXHAUST FAN / LIGHT COMBINATIONS SHALL BE SEPERATELY SWITCHED WITHIN FIXTURE MANUFACTURER'S SINGLE CONTROL, OR PROVIDE SEPARATE SWITCHING.
4. AT THE TIME OF ROUGH INSTALLATION OR DURING STORAGE ON THE CONSTRUCTION SITE AND UNTIL FINAL STARTUP OF THE HEATING AND COOLING EQUIPMENT, ALL DUCT AND OTHER RELATED AIR DISTRIBUTION COMPONENT OPENINGS SHALL BE COVERED WITH TAPE, PLASTIC, SHEETMETAL OR OTHER METHODS ACCEPTABLE TO THE ENFORCING AGENCY TO REDUCE THE AMOUNT OF DUST OR DEBRIS WHICH MAY COLLECT IN THE SYSTEM, CGBSC 4.504.1.
5. LAUNDRY ROOM FAN SHALL BE CONTINUOUSLY OPERATING TO SATISFY WHOLE HOUSE VENTILATION REQUIREMENTS, 85 CFM MINIMUM AND RATED AT A MAXIMUM OF 1.0 SONE., VERIFY SIZING.

ELECTRICAL:

1. ALL RECEPTACLES IN BATHROOMS, GARAGES, ACCESSORY BUILDINGS, OUTDOORS, CRAWL SPACES, UNFINISHED BASEMENTS, KITCHENS, WITHIN 6 FEET OF SINKS, BATHTUBS, OR SHOWERS, BOATHOUSES, AND LAUNDRY AREAS SHALL HAVE GROUND-FAULT CIRCUIT-INTERRUPTER PROTECTION (CEC 210.8(A)).
2. GFCI PROTECTION SHALL BE PROVIDED FOR OUTLETS THAT SUPPLY DISHWASHERS (CEC 210.8(D)).
3. PROVIDE TWO OR MORE 20-AMP SMALL-APPLIANCE BRANCH CIRCUITS LIMITED TO SUPPLYING WALL, FLOOR, AND COUNTERTOP OUTLETS FOR THE KITCHEN, PANTRY, BREAKFAST ROOM, DINING ROOM, OR SIMILAR AREA, AND OUTLETS FOR REFRIGERATION EQUIPMENT. THESE CIRCUITS SHALL HAVE NO OTHER OUTLETS 210.11(C)(1).
4. PROVIDE AT LEAST ONE 20-AMP BRANCH CIRCUIT TO SUPPLY THE LAUNDRY OUTLET, THIS CIRCUIT SHALL HAVE NO OTHER OUTLETS (CEC 210.11(C)(2)).
5. PROVIDE AT LEAST ONE 20-AMP BRANCH CIRCUIT TO SUPPLY BATHROOM OUTLETS. THIS CIRCUIT SHALL HAVE NO OTHER OUTLETS (EXCEPT WHERE THE CIRCUIT SUPPLIES A SINGLE BATHROOM, OUTLETS FOR OTHER EQUIPMENT WITHIN THE SAME BATHROOM SHALL BE PERMITTED TO BE SUPPLIED) (CEC 210.11(C)(3).
6. ALL OUTLETS IN KITCHENS, FAMILY ROOMS, DINING ROOMS, LIVING ROOMS, PARLORS, LIBRARIES, DENS, BEDROOMS, SUNROOMS, RECREATION ROOMS, CLOSETS, HALLWAYS, LAUNDRY AREAS, OR SIMILAR ROOMS OR AREAS SHALL HAVE ARC-FAULT CIRCUIT-INTERRUPTER PROTECTION (CEC 210.12(A)).
7. KITCHEN, PANTRY, BREAKFAST ROOM, DINING ROOM, AND SIMILAR AREAS SHALL HAVE COUNTERTOP OUTLETS AT EVERY SPACE THAT IS 12 INCHES OR WIDER, AND INSTALLED SO THAT NO POINT ALONG THE WALL LINE IS MORE THAN 24 INCHES MEASURED HORIZONTALLY FROM AN OUTLET. AT LEAST ONE OUTLET SHALL BE INSTALLED AT EACH ISLAND COUNTERTOP AND PENINSULA COUNTERTOP SPACE. OUTLETS SHALL BE LOCATED ON OR ABOVE, BUT NOT MORE THAN 20 INCHES ABOVE THE COUNTERTOP. PENINSULA AND ISLAND OUTLETS MAY BE INSTALLED NOT MORE THAN 12 INCHES BELOW THE COUNTERTOP (CEC 210.52(B)).
8. ALL RECEPTACLES SHALL BE TAMPER RESISTANT EXCEPT RECEPTACLES THAT ARE LOCATED MORE THAN 5-1/2 FEET ABOVE THE FLOOR, RECEPTACLES THAT ARE PART OF A LUMINAIRE OR APPLIANCE, OR A SINGLE RECEPTACLE OR DUPLEX RECEPTACLE FOR TWO APPLIANCES LOCATED WITHIN DEDICATED SPACE FOR EACH APPLIANCE THAT, IN NORMAL USE, IS NOT EASILY MOVED (CEC 406.12(A).
9. OUTLET BOXES ON OPPOSITE SIDES OF FIRE RESISTIVE WALLS SHALL BE SEPARATED BY A HORIZONTAL DISTANCE OF 24 INCHES IN ACCORDANCE WITH CRC R302.4.2.
10. PROVIDE SMOKE DETECTORS / ALARMS IN ACCORDANCE WITH CRC SECTION 314, ALL SMOKE ALARMS SHALL BE LISTED IN ACCORDANCE WITH UL 217 AND INSTALLED IN ACCORDANCE WITH THE PROVISIONS OF THE CODE AND THE HOUSEHOLD FIRE WARNING EQUIPMENT PROVISIONS OF NFPA 72. SMOKE ALARMS SHALL BE INSTALLED IN EACH SLEEPING ROOM AND OUTSIDE EACH SEPARATE SLEEPING AREA IN THE IMMEDIATE VICINITY OF THE BEDROOMS. SMOKE ALARMS SHALL RECEIVE THEIR PRIMARY POWER FROM THE BUILDING WIRING AND SHALL BE EQUIPPED WITH A BATTERY BACKUP. ALARM DEVICES SHALL BE INTERCONNECTED IN SUCH A MANNER THAT THE ACTUATION OF ONE ALARM WILL ACTIVATE ALL OF THE ALARMS IN THE INDIVIDUAL UNIT.
11. PROVIDE CARBON MONOXIDE ALARMS IN ACCORDANCE WITH CRC SECTION 315, ALARMS SHALL RECEIVE THEIR PRIMARY POWER FROM THE BUILDING WIRING AND SHALL BE EQUIPPED WITH A BATTERY BACK-UP. ALARMS SHALL BE INTERCONNECTED IN A MANNER SUCH THAT ACTIVATION OF ONE ALARM SHALL ACTIVATE ALL OF THE ALARMS IN THE INDIVIDUAL UNIT. ALARMS SHALL BE LISTED AS COMPLYING WITH THE REQUIREMENTS OF UL 2034. DETECTORS SHALL BE LISTED AS COMPLYING WITH THE REQUIREMENTS OF UL 2075. ALARMS AND DETECTORS SHALL BE INSTALLED IN ACCORDANCE WITH THE CODE, THE CURRENT EDITION OF NFPA 720 AND THE MANUFACTURER'S INSTALLATION INSTRUCTIONS. ALARMS SHALL BE INSTALLED OUTSIDE OF EACH SEPARATE DWELLING UNIT SLEEPING AREA IN THE IMMEDIATE VICINITY OF THE BEDROOM(S), AND ON EVERY LEVEL OF A DWELLING UNIT INCLUDING BASEMENTS. CARBON MONOXIDE ALARMS COMBINED WITH SMOKE ALARMS SHALL COMPLY WITH SECTION R315, ALL APPLICABLE STANDARDS AND REQUIREMENTS FOR LISTING & APPROVAL BY THE OFFICE OF THE STATE FIRE MARSHAL FOR SMOKE ALARMS.

REVISIONS	BY

THESE PLANS ARE PREPARED UNDER THE PROPERTY OWNER'S SUPERVISION AND DIRECTION;

ALEX / DEE DEE OCEGUERA
PHONE (650) 400-2415

NEW SINGLE FAMILY RESIDENCE:

OCEGUERA RESIDENCE

MORGAN HILL, CALIFORNIA
SANTA CLARA COUNTY

13115 UVAS ROAD
APN: 756-19-017 AND 756-19-021

Date	01/03/22
Scale	---
Job	---
Drawn	---
Sheet:	A-3
Of:	6 Sheets

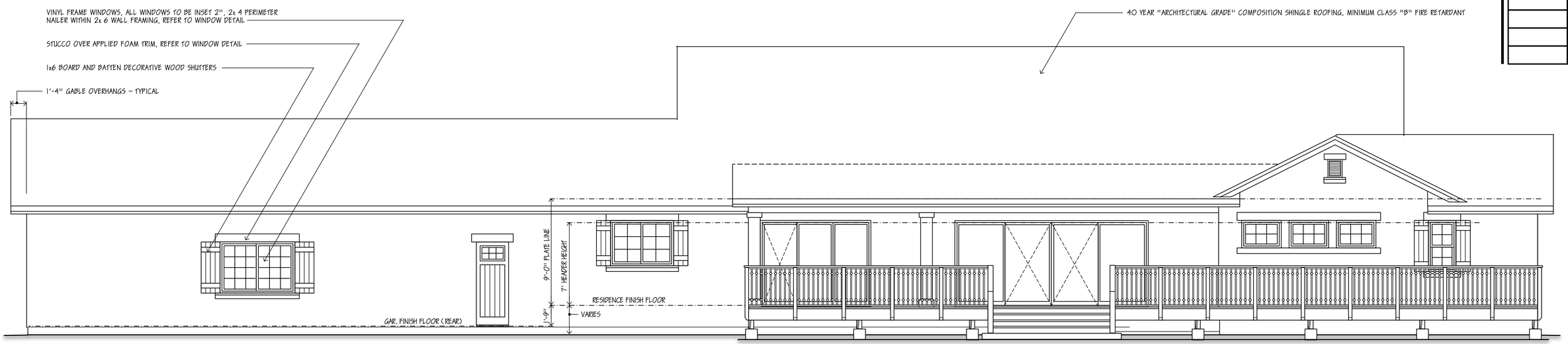

REAR ELEVATION

SCALE: 1/4" =1'-0"

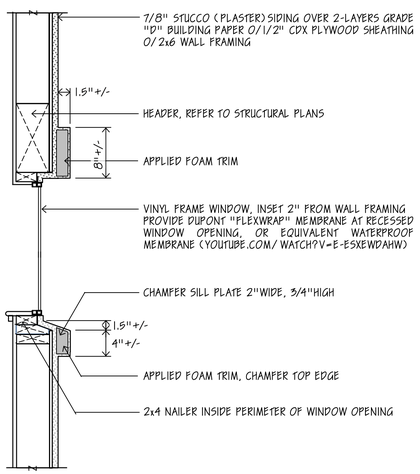

WINDOW DETAIL

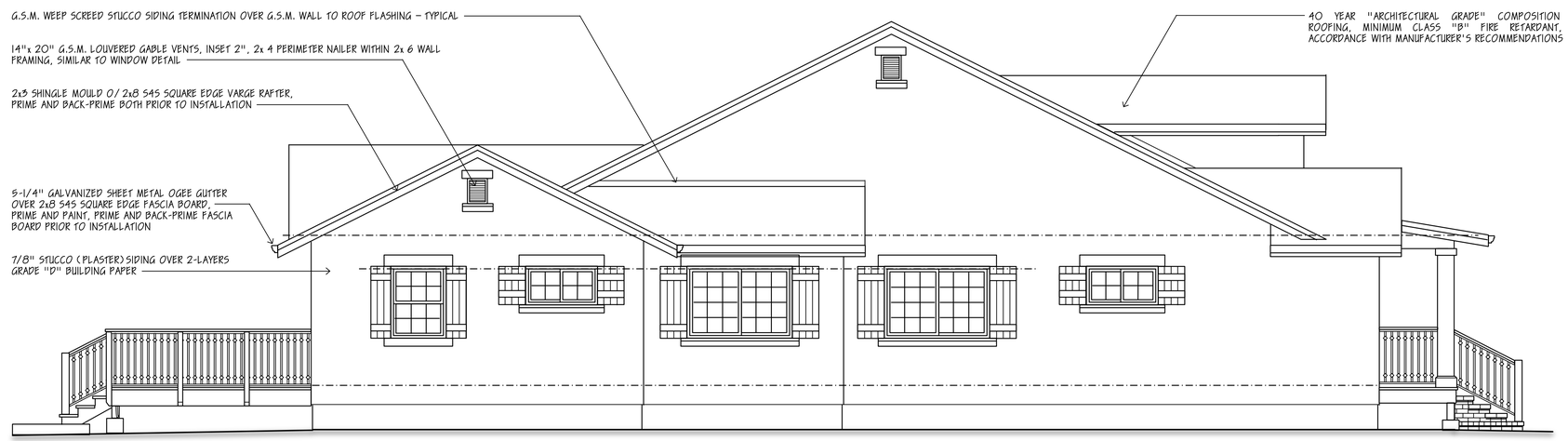

LEFT SIDE ELEVATION

SCALE: 1/4" =1'-0"

GENERAL NOTES (CONTINUED):

ENERGY / LIGHTING:

1. FAN / LIGHT COMBINATIONS SHALL BE SEPARATELY SWITCHED WITHIN FIXTURE MANUFACTURER'S SINGLE CONTROL, OR PROVIDE SEPARATE SWITCHING.
2. LUMINAIRES INSTALLED IN WET LOCATIONS SHALL BE MARKED "SUITABLE FOR WET LOCATIONS", LUMINAIRES IN DAMP LOCATIONS SHALL BE MARKED "SUITABLE FOR DAMP LOCATIONS". LUMINAIRES LOCATED WITHIN THE ACTUAL OUTSIDE DIMENSIONS OF BATHTUBS OR SHOWERS TO A HEIGHT OF 8 FEET VERTICALLY FROM THE BATHTUB RIM OR SHOWER THRESHOLD SHALL BE MARKED FOR DAMP LOCATIONS, OR MARKED FOR WET LOCATIONS WHERE SUBJECT TO SHOWER SPRAY (CEC 410.10(A), 410.10(D)..
3. CLOSET LIGHT FIXTURE INSTALLATION SHALL BE IIN ACCORDANCE WITH CEC ARTICLE 410.16.
4. ALL RECESSED CAN LIGHTS SHALL BE (HIGH EFFICACY), IC RATED, AND CERTIFIED AS AIR TIGHT.
5. REFER TO ENERGY COMPLIANCE DOCUMENTATION MANDATORY MEASURES, "LIGHTING MEASURES" FOR SPECIFIC LIGHTING REQUIREMENTS.

PLUMBING:

1. DISHWASHING MACHINES SHALL DISCHARGE INDIRECTLY THROUGH AN AIR GAP FITTING IN ACCORDANCE WITH CPC SECTION 807.3 (CPC 414.3).
2. SHOWERS AND TUB-SHOWER COMBINATIONS SHALL HAVE INDIVIDUAL CONTROL VALVES OF THE PRESSURE BALANCE, THERMOSTATIC, OR COMBINATION PRESSURE BALANCE/THERMOSTATIC MIXING VALVE TYPE THAT PROVIDES SCALD AND THERMAL SHOCK PROTECTION (CPC 408.3).
3. SHOWER COMPARTMENTS SHALL HAVE A MINIMUM INTERIOR FINISH AREA OF NOT LESS THAN 1024 SQUARE INCHES AND SHALL BE CAPABLE OF ENCOMPASSING A 30" CIRCLE (CPC 408.6).
4. THE MAXIMUM HOT WATER TEMPERATURE DISCHARGING FROM BATHTUB AND WHIRLPOOL BATHTUB FILLERS SHALL BE LIMITED TO 120^{0}F BY A DEVICE THAT IS IN ACCORDANCE WITH ASSE 1070 (CPC 409.4).
5. PROVIDE BACKFLOW PREVENTION DEVICE AT ALL NEW EXTERIOR HOSE-BIBS IN ACCORDANCE WITH THE PROVISIONS OF CPC SECTION 603.0, CONSULT OWNER FOR HOSE-BIB LOCATIONS
6. PROVIDE WATERHAMMER ARRESTERS FOR QUICK-ACTING VALVES (AT CLOTHES WASHERS, DISWASHERS, ETC.) IN THE WATER SUPPLY LINE (CPC 609.10).
7. PROVIDE CLEANOUTS IN SANITARY SEWER PIPING IN ACCORDANCE WITH CPC 707, PROVIDE WALL CLEANOUTS FOR ALL SINKS AS REQUIRED BY CPC 707.4, EXCEPTION (1). NO UNDER-FLOOR CLEANOUT SHALL BE LOCATED EXCEEDING 5 FEET OF AN ACCESS DOOR, TRAP DOOR OR CRAWL HOLE.
8. PLUMBING VENTS SHALL TERMINATE VERTICALLY NOT LESS THAN SIX INCHES ABOVE THE ROOF NOR LESS THAN 1 FOOT FROM ANY VERTICAL SURFACE AND SHALL BE 10 FEET AWAY OR 3 FEET ABOVE ANY OPENINGS (CPC 906.1, 906.2).
9. SPECIAL VENTING FOR ISLAND SINK FIXTURES SHALL COMPLY WITH CPC 909.0.
10. PROVIDE A GAS-FIRED INSTANTANEOUS TYPE WATER HEATER, MOUNTED TO BUILDING EXTERIOR OR GARAGE INTERIOR, VERIFY LOCATION WITH OWNER, INSTALLATION SHALL MEET THE REQUIREMENTS OF THE CALIFORNIA ENERGY COMMISSION, REFER TO ENERGY COMPLIANCE DOCUMENTATION. PROVIDE TEMPERATURE/PRESSURE RELIEF VALVE AS NECESSARY.
11. AT WASHER AND DRYER SPACE, PROVIDE HOT AND COLD WATER SUPPLY AND WASTE RECESSED IN WALL FOR WASHER, PROVIDE 220V AND GAS SUPPLY FOR DRYER, VERIFY EQUIPMENT DIMENSIONS AND INSTALLATION REQUIREMENTS PRIOR TO CONSTRUCTION, PROVIDE DRYER VENT THROUGH FLOOR TO EXTERIOR SIDE WALL, EXHAUST VENT LENGTH AND TERMINATION SHALL BE PER CMC 504.3.2, MINIMUM 4" DIAMETER, MAXIMUM 14' COMBINED HORIZONTAL AND VERTICAL LENGTH, 2 FEET DEDUCTED FROM MAXIMUM LENGTH FOR EACH ELBOW IN EXCESS OF 2.

PLASTER / DRYWALL:

1. STUCCO SIDING SHALL BE INSTALLED OVER 2 LAYERS OF INDEPENDENTLY INSTALLED GRADE "D" PAPER (OR EQUIVALENT) OVER PLYWOOD SHEATHING, OVER WALL FRAMING. A MINIMUM .019 INCH (26 GAUGE) CORROSION-RESISTANT WEEP SCREED WITH A MINIMUM VERTICAL ATTACHMENT FLANGE OF 3-1/2 INCHES SHALL BE PROVIDED AT OR BELOW THE FOUNDATION PLATE LINE AT THE STUCCO TERMINATION. THE SCREED SHALL BE PLACED A MINIMUM OF 4 INCHES ABOVE EARTH OR 2 INCHES ABOVE PAVED AREAS AND SHALL BE OF A TYPE WHICH WILL ALLOW TRAPPED WATER TO DRAIN TO THE EXTERIOR OF THE BUILDING.
2. INTERIOR GYPSUM BOARD SHEATHING TO BE 1/2" AT WALLS, 5/8" AT CEILINGS OR WHERE FRAMING MEMBERS ARE SPACED AT 24" O/C. PROVIDE 5/8" TYPE "X" GYPSUM BOARD SHEATHING AT GARAGE SIDE OF COMMON WALLS (1/2" GYPSUM BOARD MINIMUM REQUIRED BY CRC TABLE R302.6).

DOORS AND WINDOWS:

1. WINDOWS TO BE MILGARD VINYL "STYLELINE" SERIES, VINYL FRAME, DUAL GLAZING, REFER TO ENERGY COMPLIANCE DOCUMENTATION FOR REQUIRED U-FACTOR AND SHGC COEFFICIENT.
2. EGRESS WINDOWS (BEDROOMS) FINISHED OPENING SHALL BE NO MORE THAN 44" ABOVE THE FLOOR, NET CLEAR OPENING AREA SHALL BE 20" MINIMUM IN WIDTH AND 24" MINIMUM IN HEIGHT WITH A TOTAL AREA OF 5.7 SQ. FT. (5.0 SQ. FT. FOR GRADE LEVEL ROOM), CRC R310.1.
3. NEW TUBULAR SKYLIGHTS SHALL BE SOLATUBE "SMART LED" 10" DIAMETER WITH INTERNAL LED LIGHTING, OR SOLATUBE "290 DS" 14" DIAMETER WITH INTERNAL COMPACT FLUORESCENT LIGHTING. VERIFY U-VALUE AND SHGC REQUIREMENTS AT ENERGY COMPLIANCE DOCUMENTATION. VERIFY INTERNAL LUMINAIRE MEETS CEC HIGH EFFICACY REQUIREMENTS.
4. PROVIDE SAFETY GLAZING IN HAZARDOUS LOCATIONS IN ACCORDANCE WITH CRC SECTION R308.4, A PERMANENT LABEL SHALL IDENTIFY EACH LIGHT OF SAFETY GLAZING (CRC 2308.1).

REVISIONS	BY

THESE PLANS ARE PREPARED UNDER THE PROPERTY OWNER'S SUPERVISION AND DIRECTION;

ALEX / DEE DEE OCEGUERA
PHONE (650) 400-2415

NEW SINGLE FAMILY RESIDENCE:

OCEGUERA RESIDENCE

MORGAN HILL, CALIFORNIA
SANTA CLARA COUNTY

13115 UVAS ROAD
APN: 756-19-017 AND 756-19-021

Date	01/03/22
Scale	---
Job	---
Drawn	---
Sheet:	A-4
Of:	6 Sheets

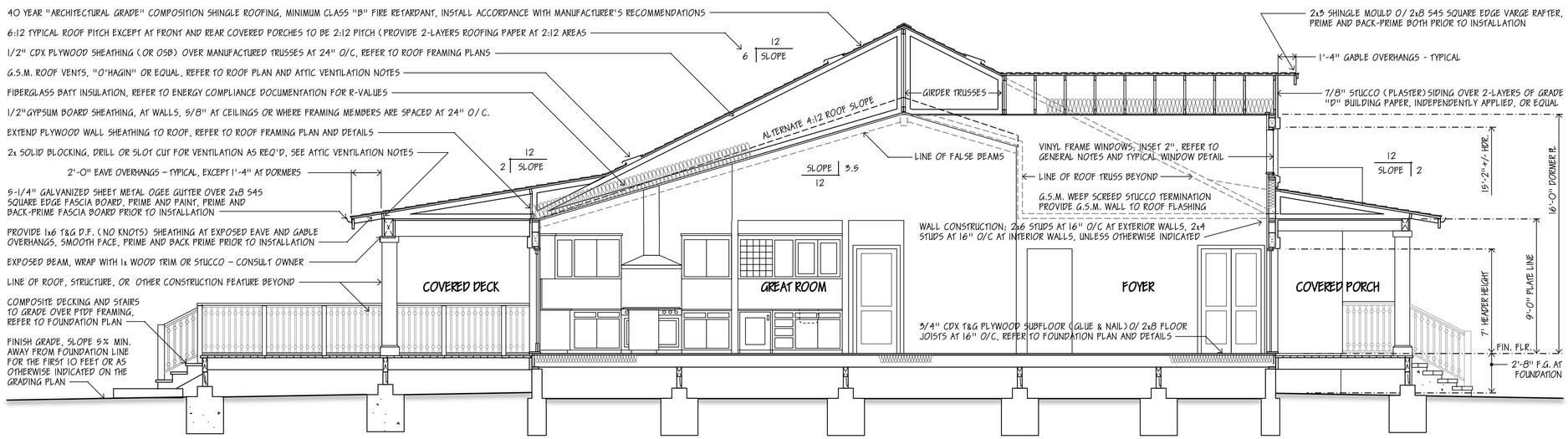

A / A-5 **CROSS SECTION**

SCALE: 1/4" =1'-0"

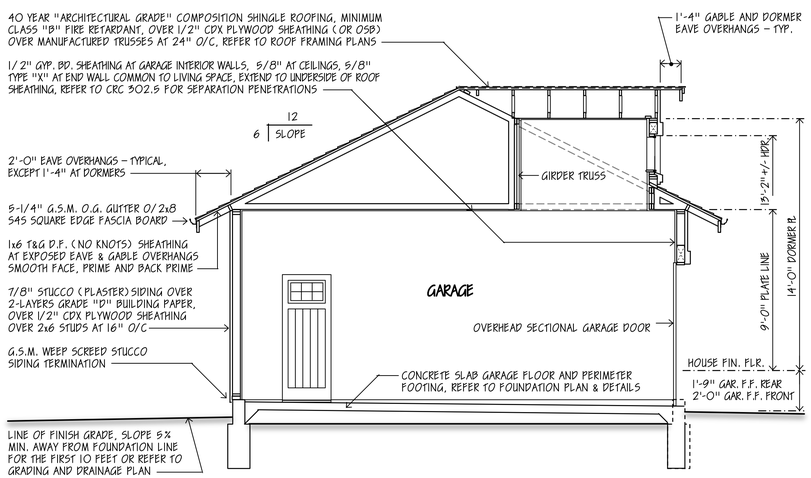

B / A-5 **CROSS SECTION**

SCALE: 1/4" =1'-0"

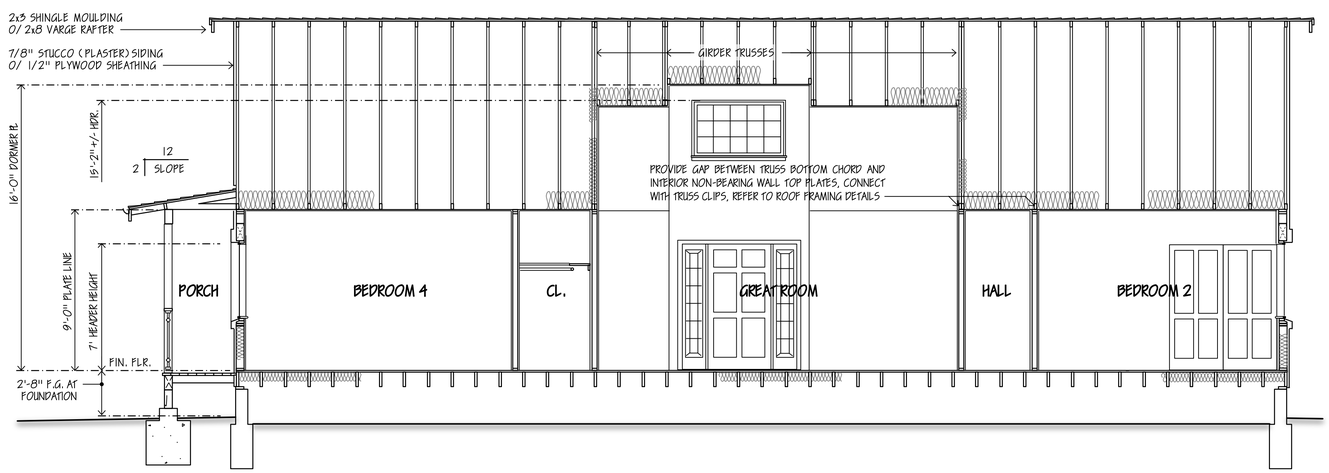

C / A-5 **CROSS SECTION**

SCALE: 1/4" =1'-0"

REVISIONS	BY

THESE PLANS ARE PREPARED UNDER THE DIRECTION AND RESPONSIBILITY OF THE PROPERTY OWNERS; ALEX AND DEE DEE OCEGUERA AND SHALL NOT BE DUPLICATED OR REPRODUCED WITHOUT THEIR EXPRESS WRITTEN CONSENT

ALEX OCEGUERA / DEE DEE OCEGUERA
EMAIL: OCEGUERA.ALEX@GMAIL.COM / DDOCEGUERA@GMAIL.COM PHONE (650) 400-2415

NEW SINGLE FAMILY RESIDENCE:

OCEGUERA RESIDENCE

MORGAN HILL, CALIFORNIA
SANTA CLARA COUNTY

13115 UVAS ROAD
APN: 756-19-017 AND 756-19-021

Date	01/03/22
Scale	---
Job	---
Drawn	---
Sheet:	A-5
Of:	6 Sheets

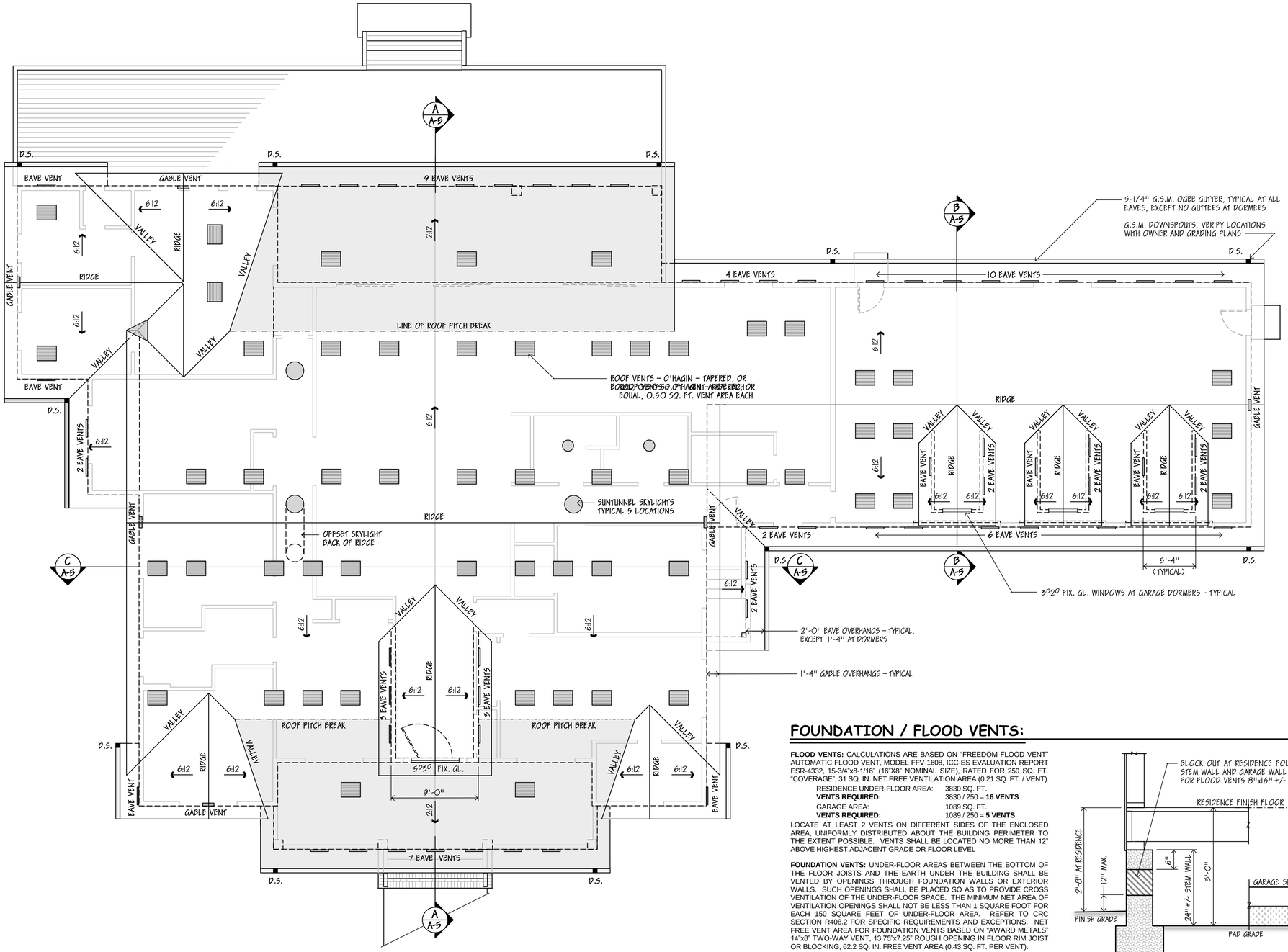

ROOF PLAN

SCALE: 3/16" =1'-0"

ATTIC VENTILATION:

ATTIC VENTILATION SHALL BE NOT LESS THAN 1/150TH OF THE AREA OF THE SPACE TO BE VENTILATED. COMPLETE CROSS VENTILATION IS REQUIRED IN ALL ROOF SPACES INCLUDING CATHEDRAL / VAULTED CEILING AREAS, REFER TO CRC R806.2 FOR SPECIFIC REQUIREMENTS AND EXCEPTIONS (VENTILATION AREA MAY BE REDUCED TO 1/300TH).

RESIDENCE ATTIC AREA:	**3830 SQ. FT.**
REQUIRED VENT AREA:	3830 / 150 = 25.53 SQ. FT.
14"x20" GABLE END VENTS:	94 IN^2 = 0.65 SQ. FT. EACH
GABLE VENTS PROVIDED:	0.65 x 5 VENTS = 3.25 SQ. FT.
EAVE VENTS (2"x10-1/4" SLOT):	0.14 SQ. FT. PER VENT
EAVE VENTS PROVIDED:	12 x 0.14 = 1.68 SQ. FT.
ROOF VENTS (O'HAGIN TAPERED):	72 IN^2 = 0.50 SQ. FT. EACH
ROOF VENTS PROVIDED:	0.50 x 42 VENTS = 21.00 S.F.
TOTAL VENT AREA PROVIDED:	3.25+1.68+21.00 = 25.93 S.F.
RESIDENCE ATTIC ALTERNATIVE FOR OF VENTS IN UPPER ATTIC AREA:	**40%-50%**
REQUIRED VENT AREA:	3830 / 300 = 12.77 SQ. FT.
LOWER VENT AREA REQUIRED:	50% x 12.77 = 6.39 SQ. FT.
EAVE VENTS PROVIDED:	1.68 SQ. FT.
LOWER ROOF VENTS REQUIRED:	6.39 - 1.68 = 4.71 SQ. FT.
PROVIDE 10 LOWER ROOF VENTS:	5.00 SQ. FT.
UPPER ATTIC VENT AREA MINIMUM:	40% x 12.77 = 5.11 SQ. FT.
GABLE VENTS PROVIDED:	3.25 SQ. FT.
ADDITIONAL MINIMUM UPPER VENTS:	5.11 - 3.25 = 1.86 SQ. FT.
UPPER ROOF VENTS REQUIRED:	12.77-1.68-5-3.25 = 2.84 S.F.
PROVIDE 6 UPPER ROOF VENTS:	6 x 0.50 = 3.00 SQ. FT.
TOTAL VENT AREA PROVIDED:	1.68+5+3.25+3=12.93 SQ. FT.
GARAGE ATTIC AREA:	**1089 SQ. FT.**
REQUIRED VENT AREA:	1089 / 150 = 7.26 SQ. FT.
14"x20" GABLE END VENT:	0.65 SQ. FT.
EAVE VENTS (2"x10-1/4" SLOT):	0.14 SQ. FT. PER VENT
EAVE VENTS PROVIDED:	16 x 0.14 = 2.24 SQ. FT.
ROOF VENTS (O'HAGIN TAPERED):	72 IN^2 = 0.50 SQ. FT. EACH
ROOF VENTS PROVIDED:	0.50 x 9 VENTS = 4.50 S.F.
TOTAL VENT AREA PROVIDED:	0.65+2.24+4.50 = 7.39 S.F.
GARAGE ATTIC ALTERNATIVE FOR 40%-50% OF VENTS IN UPPER ATTIC AREA:	
REQUIRED VENT AREA:	1089 / 300 = 3.63 SQ. FT.
LOWER VENT AREA REQUIRED:	50% x 3.63 = 1.82 SQ. FT.
EAVE VENTS PROVIDED:	2.24 SQ. FT.
UPPER ATTIC VENT AREA MINIMUM:	40% x 3.63 = 1.45 SQ. FT.
GABLE VENTS PROVIDED:	0.65 SQ. FT.
ADDITIONAL MINIMUM UPPER VENTS:	1.45 - 0.65 = 0.80 SQ. FT.
PROVIDE 2 UPPER ROOF VENTS:	2 x 0.50 = 1.00 SQ. FT.
TOTAL VENT AREA PROVIDED:	2.24+0.65+1.00=3.89 SQ. FT.
ENTRY PORCH ATTIC AREA:	**297 SQ. FT.**
REQUIRED VENT AREA:	297 / 150 = 1.98 SQ. FT.
EAVE VENTS (2"x10-1/4" SLOT):	0.14 SQ. FT. PER VENT
EAVE VENTS PROVIDED:	7 x 0.14 = 0.98 SQ. FT.
ROOF VENTS (O'HAGIN TAPERED):	72 IN^2 = 0.50 SQ. FT. EACH
ROOF VENTS PROVIDED:	0.50 x 2 VENTS = 1.00 S.F.
TOTAL VENT AREA PROVIDED:	0.98 + 1.00 = 1.98 S.F.
COVERED DECK ATTIC AREA:	**397 SQ. FT.**
REQUIRED VENT AREA:	397 / 150 = 2.65 SQ. FT.
EAVE VENTS (2"x10-1/4" SLOT):	0.14 SQ. FT. PER VENT
EAVE VENTS PROVIDED:	9 x 0.14 = 1.26 SQ. FT.
ROOF VENTS (O'HAGIN TAPERED):	72 IN^2 = 0.50 SQ. FT. EACH
ROOF VENTS PROVIDED:	0.50 x 3 VENTS = 1.50 S.F.
TOTAL VENT AREA PROVIDED:	1.26 + 1.50 = 2.76 S.F.
FOYER DORMER ATTIC AREA:	**126 SQ. FT.**
REQUIRED VENT AREA:	126 / 150 = 0.84 SQ. FT.
EAVE VENTS (2"x10-1/4" SLOT):	0.14 SQ. FT. PER VENT
EAVE VENTS PROVIDED:	6 x 0.14 = 0.84 SQ. FT.
GARAGE DORMER ATTIC AREA (EACH):	**45 SQ. FT.**
REQUIRED VENT AREA:	45 / 150 = 0.30 SQ. FT.
EAVE VENTS (2"x10-1/4" SLOT):	0.14 SQ. FT. PER VENT
EAVE VENTS PROVIDED:	3 x 0.14 = 0.42 SQ. FT.

NOTES:

EAVE VENTS ARE LOCATED AT RAFTER BLOCKING AT EXTERIOR WALLS, VENTS SHALL BE UNIFORMLY DISTRIBUTED ABOUT THE PERIMETER OF THE ATTIC SPACE VENTED.

PROVIDE OPENINGS IN ROOF SHEATHING AT AREAS OF CALIFORNIA FRAMING TO ALLOW FREE AIR FLOW.

PROVIDE INSULATION BAFFLES AT EAVE VENT LOCATIONS SUFFICIENT TO PREVENT OBSTRUCTION OF FREE AIR FLOW TO ATTIC SPACE, A MINIMUM OF 1" OF AIR SPACE SHALL BE PROVIDED BETWEEN THE INSULATION AND ROOF SHEATHING.

FOUNDATION / FLOOD VENTS:

FLOOD VENTS: CALCULATIONS ARE BASED ON "FREEDOM FLOOD VENT" AUTOMATIC FLOOD VENT, MODEL FFV-1608, ICC-ES EVALUATION REPORT ESR-4332, 15-3/4"x8-1/16" (16"X8" NOMINAL SIZE), RATED FOR 250 SQ. FT. "COVERAGE", 31 SQ. IN. NET FREE VENTILATION AREA (0.21 SQ. FT. / VENT)

RESIDENCE UNDER-FLOOR AREA:	3830 SQ. FT.
VENTS REQUIRED:	3830 / 250 = **16 VENTS**
GARAGE AREA:	1089 SQ. FT.
VENTS REQUIRED:	1089 / 250 = **5 VENTS**

LOCATE AT LEAST 2 VENTS ON DIFFERENT SIDES OF THE ENCLOSED AREA, UNIFORMLY DISTRIBUTED ABOUT THE BUILDING PERIMETER TO THE EXTENT POSSIBLE. VENTS SHALL BE LOCATED NO MORE THAN 12" ABOVE HIGHEST ADJACENT GRADE OR FLOOR LEVEL

FOUNDATION VENTS: UNDER-FLOOR AREAS BETWEEN THE BOTTOM OF THE FLOOR JOISTS AND THE EARTH UNDER THE BUILDING SHALL BE VENTED BY OPENINGS THROUGH FOUNDATION WALLS OR EXTERIOR WALLS. SUCH OPENINGS SHALL BE PLACED SO AS TO PROVIDE CROSS VENTILATION OF THE UNDER-FLOOR SPACE. THE MINIMUM NET AREA OF VENTILATION OPENINGS SHALL NOT BE LESS THAN 1 SQUARE FOOT FOR EACH 150 SQUARE FEET OF UNDER-FLOOR AREA. REFER TO CRC SECTION R408.2 FOR SPECIFIC REQUIREMENTS AND EXCEPTIONS. NET FREE VENT AREA FOR FOUNDATION VENTS BASED ON "AWARD METALS" 14"x8" TWO-WAY VENT, 13.75"x7.25" ROUGH OPENING IN FLOOR RIM JOIST OR BLOCKING, 62.2 SQ. IN. FREE VENT AREA (0.43 SQ. FT. PER VENT).

RESIDENCE UNDER-FLOOR AREA:	3830 SQ. FT.
REQUIRED VENT AREA:	3830 /150 = 25.53 SQ. FT.
FLOOD VENT AREA	16 x 0.21 = 3.36 SQ. FT.
ADDITIONAL AREA REQUIRED:	25.53 - 3.36 = 22.17 SQ. FT.
FOUNDATION VENTS REQUIRED:	22.17 / 0.43 = **52 VENTS**

LOCATE FOUNDATION VENTS AS CLOSE TO CORNERS AS PRACTICAL WITH AT LEAST ONE VENT WITHIN 3 FEET OF CORNERS, VENTS SHALL BE UNIFORMLY DISTRIBUTED ABOUT THE BUILDING PERIMETER TO THE EXTENT POSSIBLE, VERIFY VENT FREE AREA AND ADJUST ACCORDINGLY.

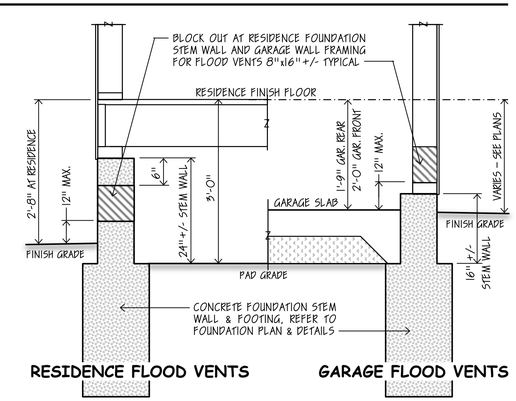

RESIDENCE FLOOD VENTS

GARAGE FLOOD VENTS

REVISIONS	BY

THESE PLANS ARE PREPARED UNDER THE DIRECTION AND RESPONSIBILITY OF THE PROPERTY OWNERS; ALEX AND DEE DEE OCEGUERA AND SHALL NOT BE DUPLICATED OR REPRODUCED WITHOUT THEIR EXPRESS WRITTEN CONSENT

ALEX OCEGUERA / DEE DEE OCEGUERA
EMAIL: OCEGUERA.ALEX@GMAIL.COM / DDOCEGUERA@GMAIL.COM PHONE (650) 400-2415

NEW SINGLE FAMILY RESIDENCE:

OCEGUERA RESIDENCE

MORGAN HILL, CALIFORNIA
SANTA CLARA COUNTY

13115 UVAS ROAD
APN: 756-19-017 AND 756-19-021

Date	01/03/22
Scale	---
Job	---
Drawn	---
Sheet:	A-6
Of:	6 Sheets

MATERIALS TO BE USED BELOW THE BASE FLOOD EVEVATION (BFE=365'):

1. ALL MUD SILLS AND POSTS BELOW FIRST FLOOR JOISTS TO BE PRESSURE TREATED (P.T.D.F.)
2. ALL 2x OR 3x STUDS BELOW BFE (ALL CRIPPLE STUDS BELOW FIRST FLOOR SUBFLOOR AND AT CRAWL SPACE) TO BE PRESSURE TREATED.
3. ALL STUD WALLS AT THE EXTERIOR WALL OF THE GARAGE TO BE PRESSURE TREATED.
4. ALL PLYWOOD (EXTERIOR AND INTERIOR) BELOW FIRST FLOOR SUBFLOOR TO BE PRESSURE TREATED.
5. ALL WOOD AND LUMBER USED BELOW BFE WILL BE PRESSURE TREATED.
6. ALL METAL HARDWARE USED BELOW BFE WILL BE GALVANIZED FOR FLOOD RESISTANT.

ANCHOR BOLT SCHEDULE:

NEW FOOTING : USE 3x P.T.D.F. SILL WITH 5/8"Ø x12" A.B.'S (GALV.) AT 48" O.C. MINIMUM 7" EMBEDMENT AND MIN. 2 BOLTS PER SILL PIECE (USE 3"x3"x1/4" STEEL PLATE WASHERS (GALV.) TYPICAL, (U.O.N.)

(A) 5/8" x12" ANCHOR BOLTS (GALVANIZED) AT 32" O/C AT THIS AREA, MINIMUM 7" EMBEDMENT, MINIMUM 2 BOLTS PER SILL PIECE

FASTENERS FOR PRESSURE-PRESERVATIVE TREATED AND FIRE-RETARDANT TREATED WOOD SHALL BE OF HOT-DIPPED ZINC COATED GALVANIZED, STAINLESS STEEL, SILICON BRONZE OR COPPER. CBC 2304.9.5

LEGEND AND NOTES

FLOOR JOIST: 2x10 D.F. No. 2 OR BETTER AT 16" O.C., TYP. (U.O.N.)

NOTE:

PROVIDE DBL JOIST UNDER PARALLEL NON-BEARING PARTITION WALL ABOVE AND 2x BLOCKING UNDER PERPENDICULAR NON-BEARING PARTITION WALL ABOVE.

15" WIDE CONTINUOUS FOOTING WITH 4-NO.4 BARS 1-TOP, 1-MIDDLE AND 2-BOTTOM W/ NO.4 VERTICAL BAR AT 24" O.C.

DENOTES CONCRETE SPREAD FOOTING SEE PLAN FOR SIZES AND REINF.

DENOTES 4x8 GIRDER D.F. NO.1 OR BETTER W/CONCRETE SPREAD FOOTING,SEE PLAN FOR SIZES AND REINF. SEE DETAIL (4/S3)

LEDGER TO STUD WALL:
-2x D.F. No. 1 OR BETTER W/ (2) 1/4"X.3 1/2" SDS (GALV.) SCREW AT EA. STUD, TYP. (U.O.N.)

LEDGER TO WOOD RIM OR SOLID BLK'G:
-2x D.F. No. 1 OR BETTER W/ (2) 1/4"X.3 1/2" SDS (GALV.) SCREW AT 16" O.C., TYP. (U.O.N.)

LEDGER TO CONCRETE WALL/FTG.:
-2x P.T.D.F. w/ 5/8"Ø x10" A.B.'s (GALV.) Ø16"o.c. STAGG. -TYP. (U.O.N.)

HDU DENOTES SIMPSON HDU HOLDOWNS. NEW FOOTING : SEE DETAIL (3/S3)

S.A.D. DENOTES CHANGE IN GRADE SEE ARCH'L PLANS

DENOTES "FREEDOM FLOOD VENT" , MODEL FFV-1608, ICC-ES EVALUATION REPORT ESR-4332, 15-3/4"x8-1/16" (16"X8" NOMINAL SIZE), RATED FOR 250 SQ. FT. "COVERAGE". RESIDENCE UNDER-FLOOR AREA: 3830 SQ. FT., VENTS REQUIRED: 3830 / 250 = 16 VENTS, GARAGE AREA: 1089 SQ. FT., VENTS REQUIRED: 1089 / 250 = 5 VENTS. LOCATE AT LEAST 2 VENTS ON DIFFERENT SIDES OF THE ENCLOSED AREA, UNIFORMLY DISTRIBUTED ABOUT THE BUILDING PERIMETER TO THE EXTENT POSSIBLE. VENTS SHALL BE LOCATED NO MORE THAN 12" ABOVE HIGHEST ADJACENT GRADE OR FLOOR LEVEL. GARAGE FLOOD VENTS TO BE SET IN WALL FRAMING, SET RESIDENCE FLOOD VENTS IN PAIRS IN FOUNDATION WALL SEE (11/S3)

DENOTES 4x OR 6x POST, SEE FRAMING PLAN

PFA DENOTES POST FROM ABOVE

HORIZONTAL DIAPHRAGMS

FLOORS: 3/4" CDX PLYWOOD WITH 10d COMMON NAILS @ 4" O.C. BOUNDARY, 6" O.C. EDGES, AND 10" O.C. FIELD. (UNBLOCKED UNLESS OTHERWISE NOTED ON PLANS)

IF 1 1/8" THICK PLYWOOD IS USED FOR FLOOR DIAPHRAGM, USE SIMPSON 1/4"Ø x4 1/2" LONG SDS SCREWS AT SILL PLATE NAILING FOR (1) & (2) SHEARWALLS.

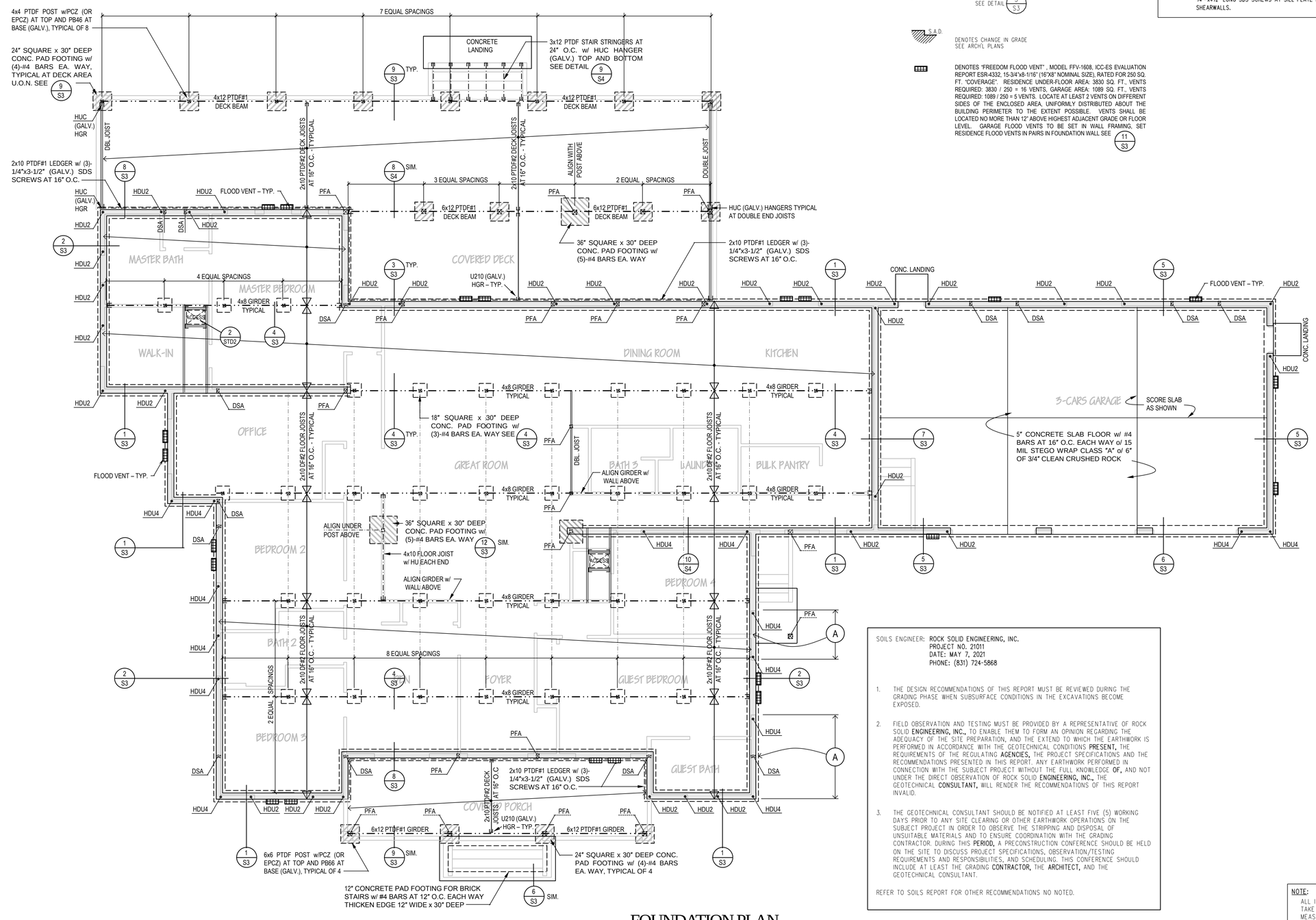

FOUNDATION PLAN

SCALE 3/16" = 1'-0"

SOILS ENGINEER: ROCK SOLID ENGINEERING, INC.
PROJECT NO. 21011
DATE: MAY 7, 2021
PHONE: (831) 724-5868

1. THE DESIGN RECOMMENDATIONS OF THIS REPORT MUST BE REVIEWED DURING THE GRADING PHASE WHEN SUBSURFACE CONDITIONS IN THE EXCAVATIONS BECOME EXPOSED.
2. FIELD OBSERVATION AND TESTING MUST BE PROVIDED BY A REPRESENTATIVE OF ROCK SOLID ENGINEERING, INC., TO ENABLE THEM TO FORM AN OPINION REGARDING THE ADEQUACY OF THE SITE PREPARATION, AND THE EXTEND TO WHICH THE EARTHWORK IS PERFORMED IN ACCORDANCE WITH THE GEOTECHNICAL CONDITIONS PRESENT, THE REQUIREMENTS OF THE REGULATING AGENCIES, THE PROJECT SPECIFICATIONS AND THE RECOMMENDATIONS PRESENTED IN THIS REPORT. ANY EARTHWORK PERFORMED IN CONNECTION WITH THE SUBJECT PROJECT WITHOUT THE FULL KNOWLEDGE OF, AND NOT UNDER THE DIRECT OBSERVATION OF ROCK SOLID ENGINEERING, INC., THE GEOTECHNICAL CONSULTANT, WILL RENDER THE RECOMMENDATIONS OF THIS REPORT INVALID.
3. THE GEOTECHNICAL CONSULTANT SHOULD BE NOTIFIED AT LEAST FIVE (5) WORKING DAYS PRIOR TO ANY SITE CLEARING OR OTHER EARTHWORK OPERATIONS ON THE SUBJECT PROJECT IN ORDER TO OBSERVE THE STRIPPING AND DISPOSAL OF UNSUITABLE MATERIALS AND TO ENSURE COORDINATION WITH THE GRADING CONTRACTOR. DURING THIS PERIOD, A PRECONSTRUCTION CONFERENCE SHOULD BE HELD ON THE SITE TO DISCUSS PROJECT SPECIFICATIONS, OBSERVATION/TESTING REQUIREMENTS AND RESPONSIBILITIES, AND SCHEDULING. THIS CONFERENCE SHOULD INCLUDE AT LEAST THE GRADING CONTRACTOR, THE ARCHITECT, AND THE GEOTECHNICAL CONSULTANT.

REFER TO SOILS REPORT FOR OTHER RECOMMENDATIONS NO NOTED.

NOTE:
ALL INDICATED DIMENSION SHALL TAKE PRECEDENCE OVER ANY SCALE MEASUREMENTS. DO NOT SCALE DRAWINGS.

REFER TO ARCHITECTURAL DRAWINGS FOR DIMENSIONS AND ROOF/ATTIC VENTILATION.

REGISTERED PROFESSIONAL ENGINEER PETER K. SUNG No. 46256 Exp. 12-31-22 CIVIL STATE OF CALIFORNIA

SUNG ENGINEERING, INC.
CIVIL ENGINEERS
29300 KOHOUTEK WAY, SUITE 130
UNION CITY, CA. 94587
OFFICE (510) 475-7900
FAX (510) 475-7913
e-mail : psung@sungengr.com

OCEGUERA RESIDENCE
13115 UVAS ROAD
MORGAN HILL, CALIFORNIA

REVISIONS/DATE BY

Engineer: PS/AM
Drafter: DY
Date: 1/03/2022
Scale: AS NOTED
Job No: 221141

SHEET
S1

DRAWING NAME: Q:\Projects\2021 JOBS\221141- OCEGUERA (CAD)\STRUCTURAL\STRUCT (DAB) 07.02.21\221141-S1.dwg
PLOT DATE: 08-13-21 PLOTTED BY: dabng

SHEAR WALL SCHEDULE

▪▪▪▪▪▪▪▪▪▪ DENOTES SHEAR WALL. SEE PLAN FOR LOCATION

SHEAR WALL	PANEL NAILING AND MATERIALS	SILL PLATE NAILING (FLOOR)	SIMPSON A35 BETWEEN BLK'G OR RIM MEMBER & TOP PLATE
1	1/2" CDX PLYWD. W/8d @ 6" O.C. EDGES & 12" O.C. FIELD	16d @ 6" O.C.	A35 @ 24" O.C.
2	1/2" CDX PLYWD. W/8d @ 4" O.C. EDGES & 12" O.C. FIELD	16d @ 4" O.C.	A35 @ 18" O.C.
3 •	1/2" CDX PLYWD. W/8d @ 3" O.C. EDGES & 12" O.C. FIELD	¼"@x5" LAG @ 6" O.C.	A35 @ 16" O.C.
4 •	1/2" CDX PLYWD. W/8d @ 2" O.C. EDGES & 12" O.C. FIELD	¼"@x5" LAG @ 4" O.C.	A35 @ 12" O.C.
5 •	1/2" STRUCT. I PLYWD. W/10d @ 2" O.C. EDGES & 12" O.C. FIELD	¼"@x5" LAG @ 2" O.C.	A35 @ 8" O.C.

• REQUIRED 3x STUD/BLK'G. AT ABUTTING PLYWOOD PANEL JOINT

HORIZONTAL DIAPHRAGMS

ROOF: 1/2" CDX PLYWOOD WITH 8d COMMON NAILS @ 4" O.C. BOUNDARY, 6" O.C. EDGES, AND 12" O.C. FIELD. (UNBLOCKED UNLESS OTHERWISE NOTED ON PLANS)

SHEAR WALL NOTES

1. ALL EXTERIOR WALLS SHALL HAVE 1/2" CDX PLYWOOD WITH SHEAR (1) NAILING UNLESS OTHERWISE NOTED ON PLANS.
2. ALL EXTERIOR AND INTERIOR CRIPPLE WALLS SHALL HAVE 1/2" CDX PLYWOOD WITH SHEAR (1) NAILING UNLESS OTHERWISE NOTED ON PLANS.
3. FRAMING AT ADJOINING PANEL EDGES SHALL BE 3" NOMINAL OR WIDER AND NAILS SHALL BE STAGGERED WHERE NAILS ARE SPACED 2" O.C.
4. WHERE PANELS ARE APPLIED ON BOTH FACES OF WALL AND NAIL SPACING IS LESS THAN 6" O.C. ON EITHER SIDE, PANEL JOINTS SHALL BE OFFSET TO FALL ON DIFFERENT FRAMING MEMBER SHALL BE 3" NOMINAL OR THICKER AND NAILS ON EACH SIDE SHALL BE STAGGERED.
5. ALTERNATE TO CDX PLYWOOD, USE ORIENTED STRANDED BOARD (OSB).
6. ALL SHEARWALL NAILING SHALL BE COMMON NAILS.

LEGEND AND NOTES

PRE-FAB WOOD TRUSSES AT 24" O.C. (BY OTHERS)

NOTE :

PRE-FABRICATED ROOF TRUSSES
PRIOR TO FABRICATION OF TRUSSES TWO COPIES OF THE FOLLOWING MATERIAL BEARING APPROVAL OF THE DESIGNER (STAMPED AND SIGNED BY THE MANUFACTURER'S ENGINEER) MUST BE SUBMITTED TO THE BUILDING OFFICIAL FOR REVIEW AT LEAST TWO WEEKS PRIOR TO FRAME INSPECTION.
1. TRUSS LAYOUT DRAWINGS
2. TRUSS CALCULATION AND DETAILS

TRUSS DESIGN MUST CONFORM TO LATEST C.B.C. CODE.

	DESIGN GRAVITY LOAD			
	LIVE LOAD		DEAD LOAD	
TOP CHORD	20 psf		12 psf	
BOTTOM CHORD	- psf		5 psf	
	20 psf	+	17 psf	= 37 psf

DESIGN ROOF TRUSSES TO INCLUDE LOADS DUE TO MECHANICAL EQUIPMENT
REFER TO ARCHITETCURAL AND DRAWINGS FOR MECHANICAL EQUIPMENT LOCATION, DIMENSIONS AND LOAD INFORMATION.
REFER TO PLANS FOR ANY LATERAL LOAD AT COLLECTOR TRUSS AND DESIGN ACCORDINGLY

ROOF RAFTERS : 2x6 D.F. No. 2 OR BETTER AT 24" O.C., TYP. (U.O.N.)

HEADERS: 4" WALL - 4x12 D.F. NO.1 OR BETTER, TYP. (U.O.N.)
6" WALL - 6x12 D.F. NO.1 OR BETTER, TYP. (U.O.N.)

SHADED AREAS DENOTE AREAS OF "CALIFORNIA FRAMING" CONTINUE PLYWOOD THROUGH AT ROOF BELOW, USE 2x6 FALSE FRAMING AT 24" O.C.

DENOTES 3x STUD/BLK'G. WALL AREA (ONLY AT ABUTTING PLYWOOD PANEL JOINT)

DENOTES FLUSH OR DROP BEAMS: (SEE FRAMING PLAN FOR SIZES & LOCATION)
-DIMENSIONAL LUMBER: D.F. No. 1, TYP. (U.O.N.)
-STRUCTURAL COMPOSITE LUMBER: ICC No. ESR 1387
MICROLAM LAMINATED VENEER LUMBER (LVL) E=2.0 x 10^6 PSI
PARALLAM PARALLEL STRAND LUMBER (PSL) E=2.2 x 10^6 PSI

DENOTES SIMPSON COIL STRAP (COLLECTOR)
CS16 - EXTEND 24" MIN. INTO SHEAR WALL - TYP. (U.O.N.) SEE (8/STD3)

HIPS, VALLEYS, RIDGE BOARD: 2x8 D.F. NO. 1 OR BETTER, U.O.N.

DENOTES 4x OR 6x POST, SEE PLAN

DENOTES 4x OR 6x KING POST, SEE PLAN

DENOTES ST6236 COLLECTOR STRAP- BEAM TO BEAM, BEAM TO TOP PLATE OR TIE TOP PLATES TYP. U.O.N.

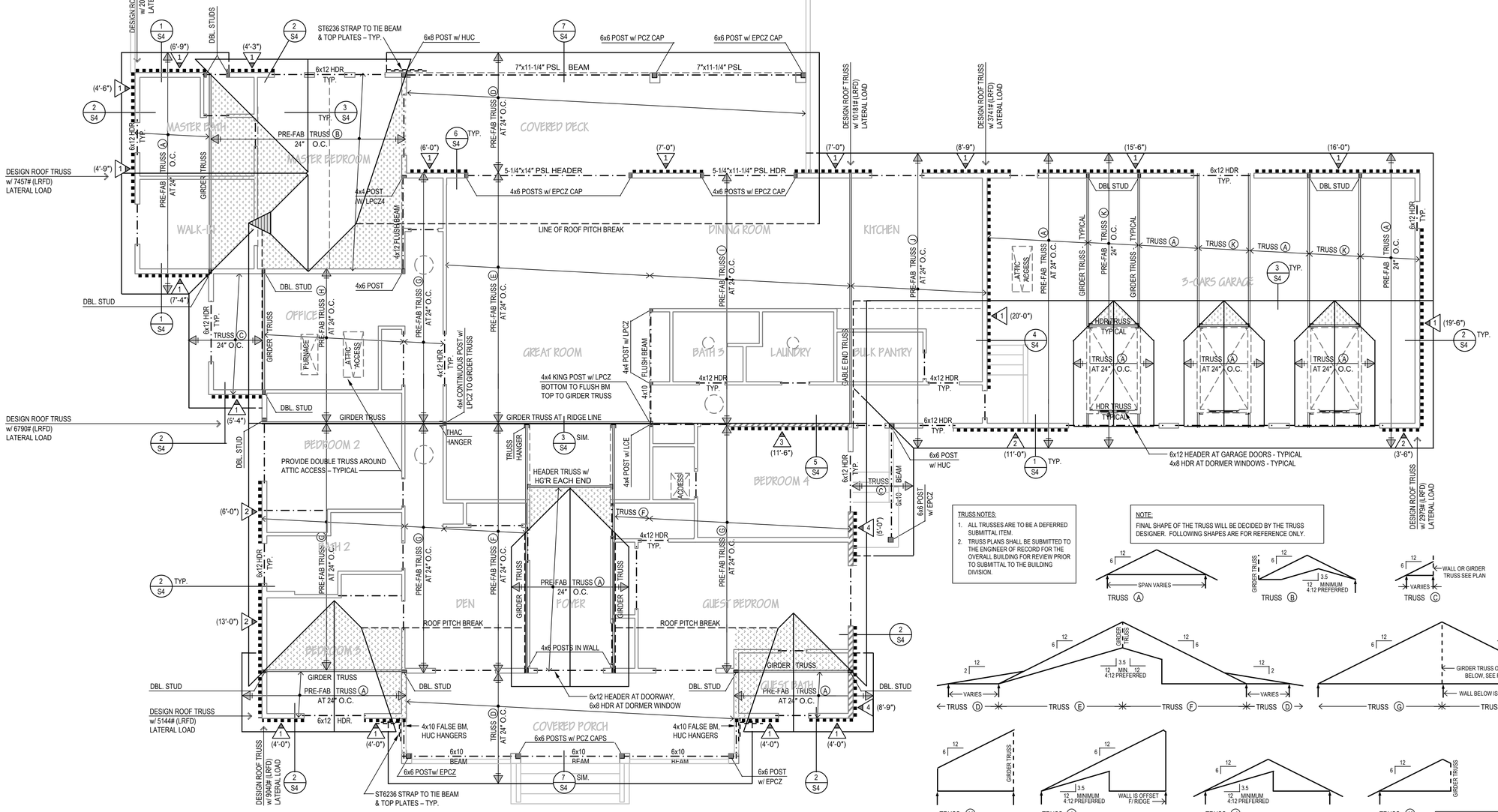

UPPER ROOF FRAMING PLAN

SCALE 3/16" = 1'-0"

TRUSS NOTES:
1. ALL TRUSSES ARE TO BE A DEFERRED SUBMITTAL ITEM.
2. TRUSS PLANS SHALL BE SUBMITTED TO THE ENGINEER OF RECORD FOR THE OVERALL BUILDING FOR REVIEW PRIOR TO SUBMITTAL TO THE BUILDING DIVISION.

NOTE:
FINAL SHAPE OF THE TRUSS WILL BE DECIDED BY THE TRUSS DESIGNER. FOLLOWING SHAPES ARE FOR REFERENCE ONLY.

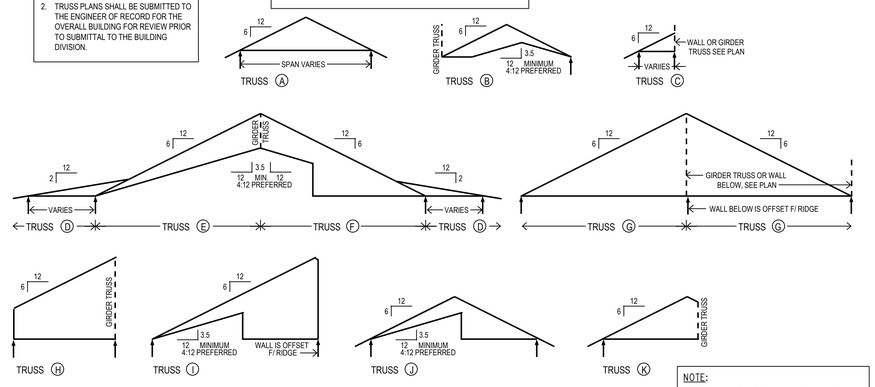

TRUSS LAYOUT DETAIL

(NOT TO SCALE)

NOTE:
ALL INDICATED DIMENSION SHALL TAKE PRECEDENCE OVER ANY SCALE MEASUREMENTS. DO NOT SCALE DRAWINGS.

REFER TO ARCHITECTURAL DRAWINGS FOR DIMENSIONS AND ROOF/ATTIC VENTILATION.

REGISTERED PROFESSIONAL ENGINEER PETER K. SUNG No. 46256 Exp. 12-31-22 CIVIL STATE OF CALIFORNIA

SUNG ENGINEERING, INC.
CIVIL ENGINEERS
29300 KOHOUTEK WAY, SUITE 130
UNION CITY, CA. 94587
OFFICE (510) 475-7900
FAX (510) 475-7913
e-mail : psung@sungengr.com

OCEGUERA RESIDENCE
13115 UVAS ROAD
MORGAN HILL, CALIFORNIA

REVISIONS/DATE BY

Engineer: PS/AM
Drafter: DY
Date: 1/03/2022
Scale: AS NOTED
Job No: 221141

SHEET

S2

DRAWING NAME: G:\Projects\2021 JOBS\221141- OCEGUERA (CAD)\STRUCTURAL\STRUCT (OAB) 07.02.21\221141-S2.dwg
PLOT DATE: 06-13-21 PLOTTED BY: odang

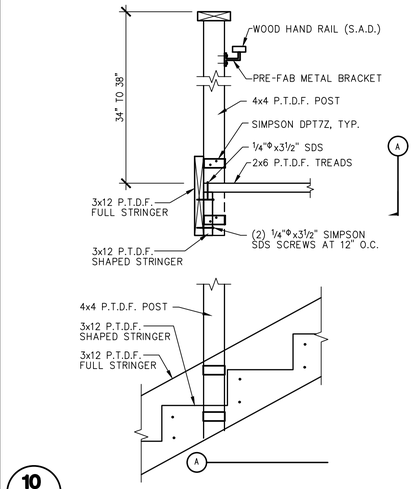

10

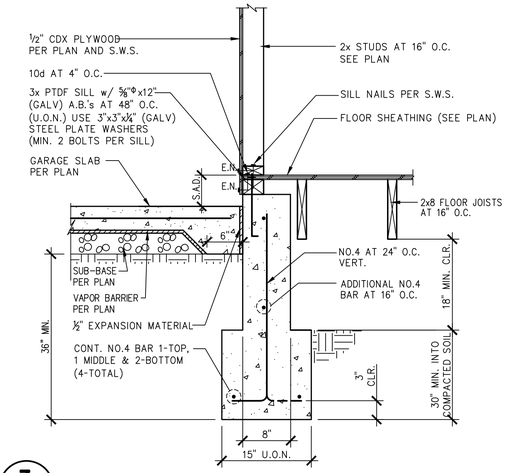

7

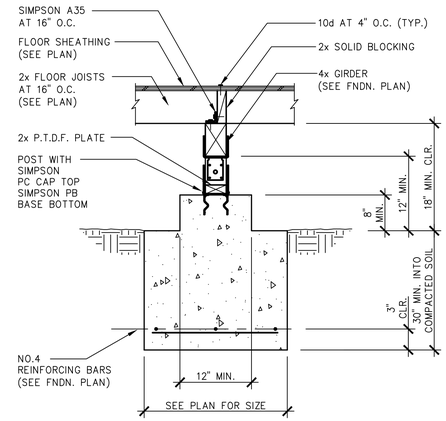

4

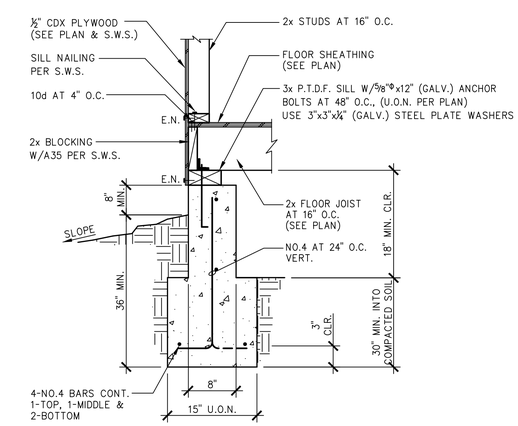

1

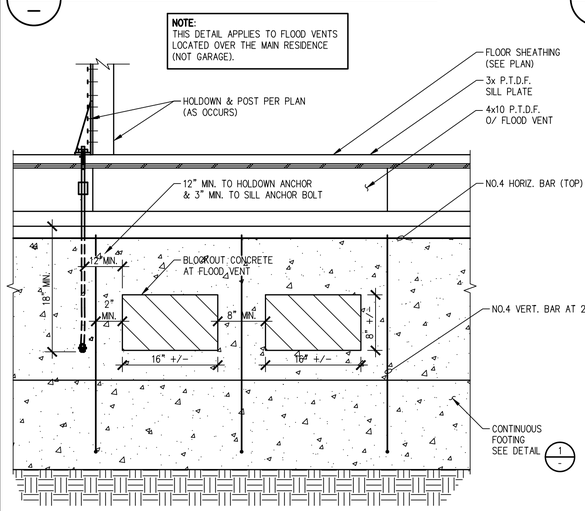

11

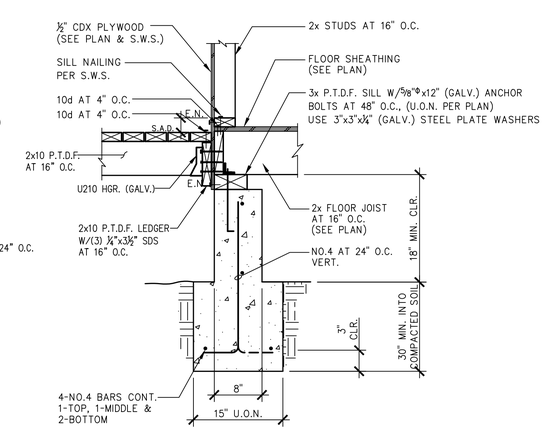

8

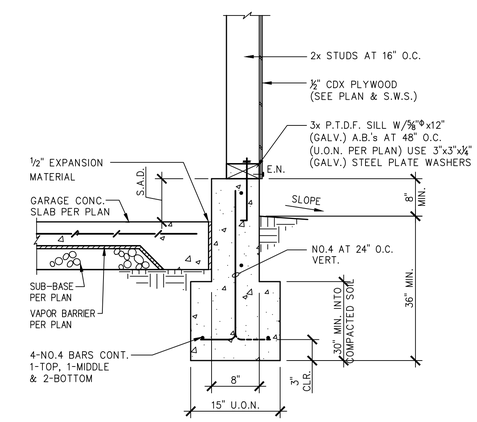

5

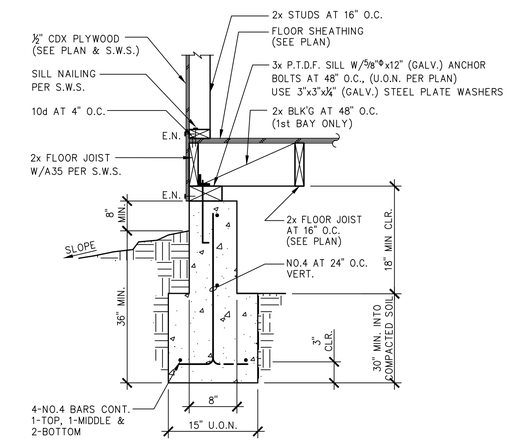

2

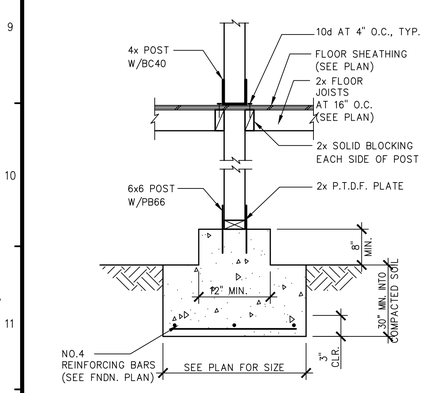

12

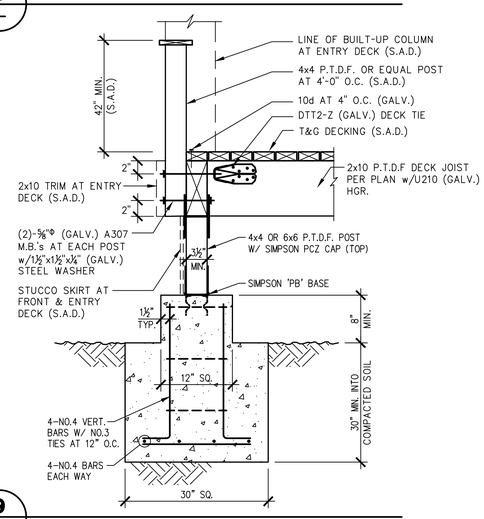

9

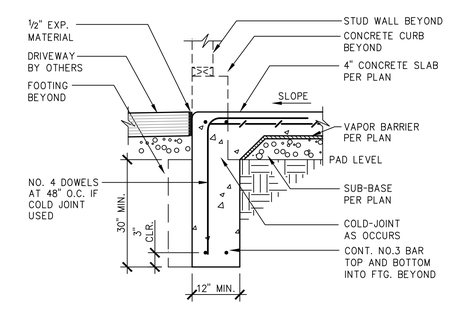

6

HDU HOLDOWN SCHEDULE				
HOLDOWN TYPE *	SB BOLT **	ANCHOR DIAMETER	SDS SCREWS TO POST	EMBEDMENT (2500 PSI CONCRETE)
HDU2	SB5/8x24	5/8"	6	18" MIN.
HDU4	SB5/8x24	5/8"	10	18" MIN.

* ICC ESR-2330 ** ICC ESR-2611

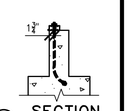

1. HDU HOLDOWN, SEE SCHEDULE FOR SCREWS TO STUD
2. THREADED ROD & COUPLER
3. EMBEDMENT
4. FOOTING
5. 4x4 MIN. STUD TO BE LOCATED AT OR NEAR END OF SHEAR WALL AND TO RECEIVE END NAILING
6. 2x SOLE PLATE
7. PLYWOOD SUBFLOOR
8. 2-2x RIM JOISTS OR DBL BLOCK AT JOIST UNDER POST (IF APPLY, SEE PLAN)
9. P.T.D.F. SILL, SEE FOUNDATION PLAN FOR ANCHOR BOLT SIZE AND SPACING
10. SIMPSON SB ANCHORS FOR HOLDOWNS, SEE SCHEDULE ABOVE FOR EMBEDMENT LENGTH AND BOLT SIZE
11. DBL. BLOCK OR 4x OR 6x POST

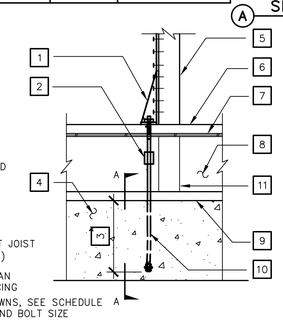

3

REGISTERED PROFESSIONAL ENGINEER
PETER K. SUNG
No. 46256
Exp. 12-31-22
CIVIL
STATE OF CALIFORNIA

SUNG ENGINEERING, INC.
CIVIL ENGINEERS
29300 KOHOUTEK WAY, SUITE 190
UNION CITY, CA 94587
OFFICE (510) 475-7900
FAX (510) 475-7913
e-mail : psung@sungengr.com

OCEGUERA RESIDENCE
13115 UVAS ROAD
MORGAN HILL, CALIFORNIA

REVISIONS/DATE BY

Engineer: PS/AM
Drafter: DY
Date: 1/3/2021
Scale: AS NOTED
Job No: 221141

SHEET
S3

DRAWING NAME: O:\Projects\2021 JOBS\221141- OCEGUERA (CAD)\STRUCTURAL\STRUCT (DAC) 12.06.21\221141-S3.dwg
PLOT DATE: 01-18-22 PLOTTED BY: adang

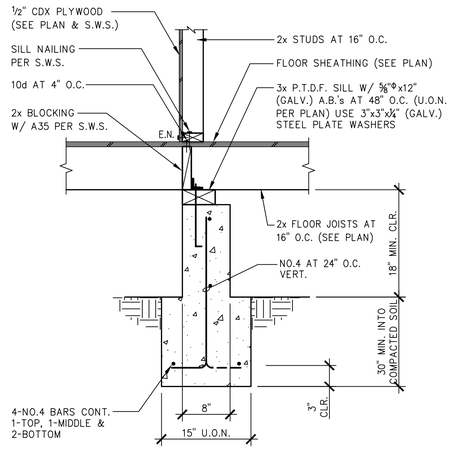

10

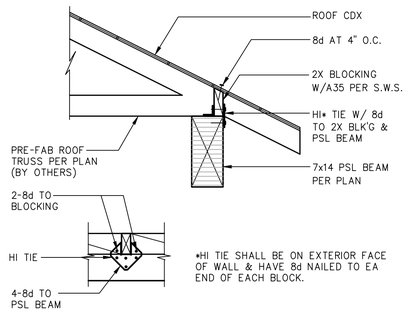

7

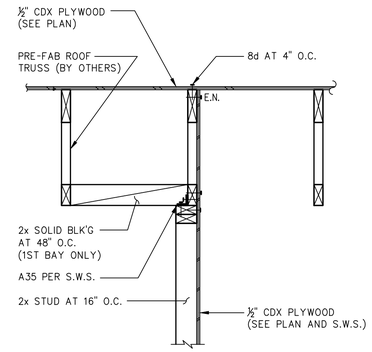

4

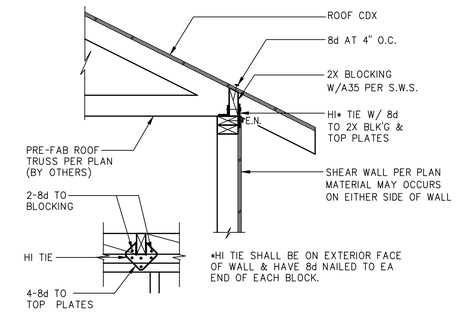

1

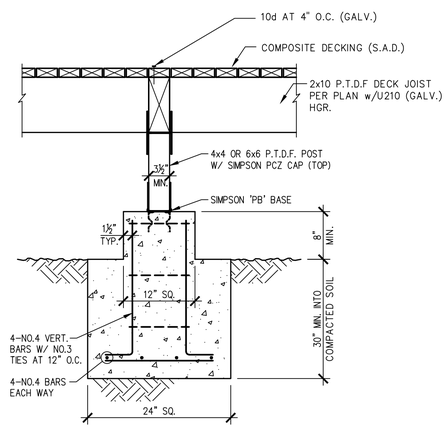

11

8

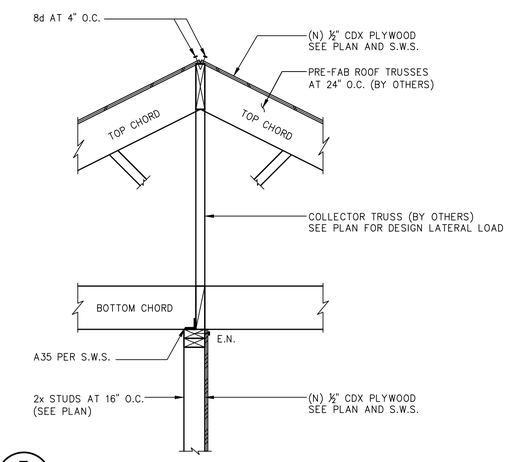

5

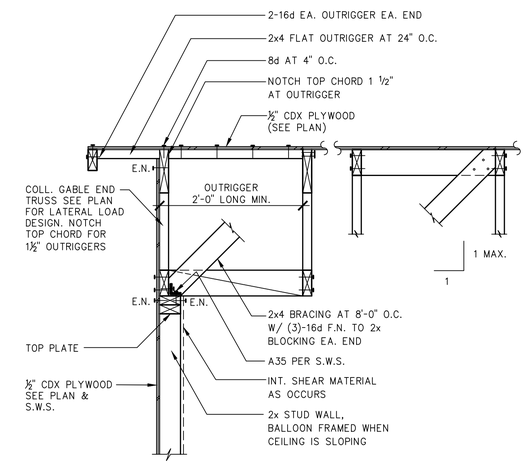

2

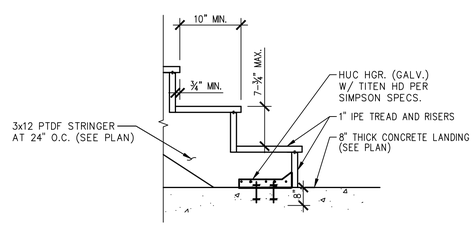

12

9

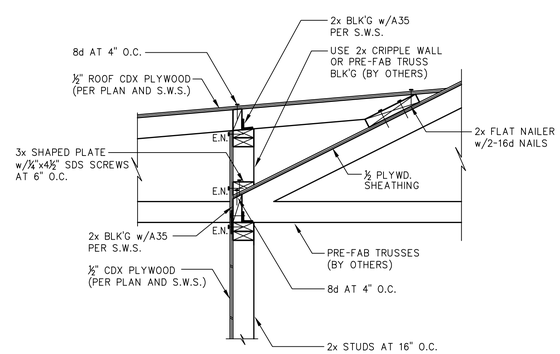

6

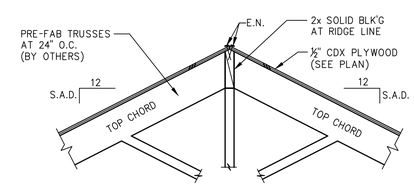

3

SUNG ENGINEERING, INC.
CIVIL ENGINEERS
29300 KOHOUTEK WAY, SUITE 190
UNION CITY, CA 94587
OFFICE (510) 475-7900
FAX (510) 475-7913
e-mail : psung@sungengr.com

REGISTERED PROFESSIONAL ENGINEER
PETER K. SUNG
No. 46256
Exp. 12-31-22
CIVIL
STATE OF CALIFORNIA

OCEGUERA RESIDENCE
13115 UVAS ROAD
MORGAN HILL, CALIFORNIA

REVISIONS/DATE BY

Engineer: PS/AM
Drafter: DY
Date: 1/3/2021
Scale: AS NOTED
Job No: 221141

SHEET
S4

DRAWING NAME: D:\Projects\2021 JOBS\221141- OCEGUERA (CAD)\STRUCTURAL\STRUCT (DAC) 12.06.21\221141-S4.dwg
PLOT DATE: 01-18-22 PLOTTED BY: ddong

STRUCTURAL SPECIFICATIONS

GENERAL

- These notes are general and apply to the entire project except where there are specific indications to the contrary. Construction shall meet the requirements of the latest edition of the 2019 California Building Code. The above shall govern except where other applicable codes or the following notes are more restrictive.
- Structures have been designed for operational loads on completed structures. During construction, structures and parts of the structures shall be protected and/or supported by bracing and shoring wherever excessive loading may occur.
- The contractor alone is responsible for job site safety. Site review of the construction by the Architect and/or Engineer, if any, is to determine conformance with the plans and specifications. It does not encompass safety procedures or operations.
- It is the responsibility of the Contractor and Subcontractor to notify the Owner and the Architect and/or Engineer of any conditions to be found in the field to be different from those shown on the plans, or of errors or omissions on the plans, which might affect the completion of the project.
- Lay out all structural work by referring to dimensions and elevation notes on the architectural plans. Do not scale structural drawings. Work details dimensions form the controlling surface points and actual material dimensions.
- Larger scale details take precedence over smaller scale details.
- Verify type and size of metal work against appropriate member size before ordering hardware.
- Hardware notes is Simpson "Strong Tie". Hardware of similar construction and equal ICC values is acceptable.
- For hardware use the maximum size bolts and nails specified in manufacturer's catalog. Nail all holes. Use special short-length nails supplied by manufacturer where common nails will exceed the width of the framing member.
- In case of conflict between structural and architectural plans, details, and/or specifications, the more restrictive condition shall apply and notify applicable parties.

CONCRETE

- All concrete work shall conform to the requirements of the latest edition of the ACI building Code (ACI-318) and the California Building Code (CBC). Detailing, fabrication, and erection of reinforcing bars shall be in accordance with the latest edition of the Manual of Standard Practices (ACI-315).
- Aggregate for the concrete mix shall conform to ASTM-C33. Cement shall conform to ASTM-C150, Type I or II.
- Concrete shall have an ultimate compressive strength of 3000 psi (28 day strength) with a 4" slump (tolerance 1").
- Reinforcing steel shall be deformed bars (ASTM A615) Grade 40, except that No. 4 or larger bars shall be Grade 60. Welded wire fabric shall be per ASTM 185. Reinforcing steel in grade beams shall be securely fastened in place horizontally and vertically prior to pouring.
- Lap bars 48 diameters at splices. Hook bars 24 diameters at corners.
- Bend down top bars at ends of grade beams, such as at garage doors.
- Provide a minimum of two anchor bolts per sill piece, with one within 12" of each end.
- Concrete floor shall be screeded, wood floated and then given a steel trowel finish.
- Provide foundation vents equal in area to 1/150 of underfloor area. Locate vents on opposing sides where possible

WOOD

- Unless otherwise noted, framing lumber shall be graded as follows:
  Framing lumber (rafters, joists, purlins, etc.): DF No.2
  Beams headers and post: DF. No. 1
  Studs: Stud grade
  Foundation sills: Pressure-treated (DF)
  Exposed decking: California Redwood No.1
- Moisture content of all structural lumber shall be less than 19 percent.
- All Plywood shall be CDX OR OSB U.O.N. Minimum thickness shall be ½" on roof, ¾" T & G on floor and ½" on walls (where noted). Use panel clips at unsupported edges of built-up roofs. Minimum span of plywood sheathing in each direction shall not be less than 24".
- Glu-lam beams shall be Grade 24F-V4, standard camber (AITC-103) U.O.N. Provide compliance certificate to building Department. Glu-lam beams shall have metal hardware connections to posts (BC post cap minimum).

FRAMING

- All framing shall conform to chapter 23 of the 2019 California Building Code. Nailing shall be per CBC Table 2304.10.1. All nails and hardware exposed to the weather shall be galvanized. Nails shall be common wire nails U.O.N.
- All bolts for wood connections shall be conform to ASTM A307 with heavy hex heads. Malleable iron washer shall be used at all places where the bolt head or nut would otherwise bear or be in contact with the wood surface. Bolt holes in wood members shall not be drilled more than 1/8" larger than the bolt diameter.
- Balloon frame all walls with sloping ceilings or with raised ceilings. Maximum stud height for 2x4 stud is 10'-0" and for 2x6 stud 14'-0". Provide fire blocking such that maximum concealed space is 10'-0".
- Block under all perpendicular partitions. Double joists (min.) under all parallel partitions.
- Bolt multiple joists together with 1/2" machine bolts at 24" o.c. Alternate bolts between the upper 1/4 and lower 1/4 of the joist depth. Nail double joists with 16d nails at 12" o.c. (similar pattern). Nail double or multiple studs with 16d at 12" o.c. (similar pattern).
- Provide lateral support at ends of joist and rafters by blocking, rim joists or hangers. Block between joists and rafters over all supports.
- Microlam (LVL) floor joist or beam shall have grade 1.9 DF/LP/WH 6 Fb=2600 psi, Fv=285 psi, MOE=2.0x10 psi, ICC ESR-1387
- Parallam (PSL) beam shall have grade 2.0 DF/SP/WH/YP OR YP/RM 6 Fb=2900 psi, Fv=290 psi, MOE=2.2x10 psi, ICC ESR-1387
- Anthony Power beam (APB) beam shall have grade 3.0 6 Fb=3000 psi, Fv=300 psi, MOE=2.1x10 psi, ICC ESR-1104
- All wood members in contact with concrete or masonry foundation surface shall be pressure treated with a preservative.
- Solid sawn members in floors shall be placed with crowns and any major knots upward.
- Posts shall be continuous from beam or header to floor or sill below. Provide at least a double stud at all bearing points under beams.
- All headers 4x12 U.O.N.
- Lap top plates 48". Nail with 16d nails.
- Maximum allowable notch is 7/8" in 2x4 studs and 1-3/8" in 2x6 studs. Maximum allowable bored hole is 1-3/8" in 2x4 studs and 2-1/8" in 2x6 studs with at lease 5/8" clear to the edge of the stud.
- Use 1x6 collar ties at 48" o.c. wherever possible. Collar ties shall be placed as low as feasible.
- Provide A35 anchor from rafter to top plate at 48" o.c. U.O.N.
- Unless otherwise noted, stagger all plywood joints in floor and roof sheathing and lay face grain perpendicular to supports. Minimum nailing for roof sheathing shall be 8d common at 6" along support edges and 12" field. Nail perimeter of diaphragm with 8d common at 4" o.c. Minimum nailing for floor sheathing shall be 10d common at 6" o.c. along supported edges and 10" field. Nail perimeter of diaphragm with 10d common at 4" o.c.
- Vertical plywood sheathing shall be blocked at all edges and shall be extended from top plate to sill of wall. Where possible, butt vertical sheathing on floor joists or blocking, leaving 3/8" gap for shrinkage. Vertical sheathing shall continue to the foundation sill if required on first floor walls. Minimum nailing is 8d at 6" edges and 12" field.
- Where plywood shear walls are interrupted by floor, provide adequate shear transfer from sole plate to blocking or joist below and from the blocking to the top plate of a wall continuation below, if any, by providing 16d common nails at the same spacing as the shear wall edge nailing U.O.N. Add 2x nailers or metal anchors as necessary.

FRAMING (CONTINUED)

- Minimum gypsum board nailing is 5d Parkerhead nail (6d for 5/8" board) at 7" o.c. edges and field.
- Holdowns are attached to 4x studs at the ends of shear walls and extend to either 4x studs or framing below or to the foundation bolts (see detail for size). Nail all double studs at holdowns together with 16d nails at 8" o.c. Where cripple walls occurs below the lower floor, install an MST172 strap holdown from the shear wall to a 4x cripple stud and a foundation holdown from the 4x cripple stud to the foundation, or bolt directly to the foundation bolt using threaded rod. The contractor shall carefully review holdown bolt embedment requirements in the Simpson Strong-Tie catalog.
- Where solid sawn wood members are framed into glu-lam members in floors, the tops of these members shall be held 3/8" above glu-lams.
- Cantilever deck joists shall be notched with hand tools to avoid overcutting.
- Fasteners for pressure-preservative treated and fire-retardant treated wood shall be of hot-dipped zinc coated galvanized, stainless steel, silicon bronze or copper. CBC 2304.9.5

STRUCTURAL STEEL

- Detailing, fabrication, and erection of structural steel shall conform to the specification and standards of the latest edition of the AISC Manual of Steel Construction.
- All structural steel plates, shapes and bars shall conform to ASTM A36.
- Steel shall be free of all scale, rust or other contaminants that would impair the bonding of the concrete to the steel.
- All structural HSS tube steel shall be A500 Grade "B". Steel bolts shall be A307.
- All steel members shall have a minimum of 2 coats of red primer, finish coat if required by owner.
- Special inspection required for all field & shop welds.

SOILS

Slope finish exterior surface away from foundation.

ABBREVIATIONS

A & B	ABOVE AND BELOW	M.B.	MACHINE BOLT
A.B.	ANCHOR BOLTS	MEZZ.	MEZZANINE
ABV	ABOVE	MFG.	MANUFACTURING
ADJ	ADJACENT	M.I.	MALLEABLE IRON
A.F.F.	ABOVE FINISH FLOOR	MIN	MINIMUM
A.P.A.	AMERICAN PLYWOOD ASSO.	MTD.	MOUNTED
ARCH	ARCHITECTURAL	(N)	NEW
B.F.W.	BALLOON FRAMED WALL	N	NORTH
BLDG.	BUILDING	N/A	NOT APPLICABLE
BLK'G	BLOCKING	NAIL'G	NAILING
BM.	BEAM	N.E.	NORTHEAST
BN.	BOUNDARY NAILING	N.T.S.	NOT TO SCALE
BOTT	BOTTOM	N.W.	NORTHWEST
BRG	BEARING	O.C.	ON CENTER
C	CAMBER	O.H.	OPPOSITE HAND
CANT.	CANTILEVER	OPEN'G	OPENING
C.J.	CEILING JOIST	OPT.	OPTIONAL
CLG	CEILING	O.S.B.	OREGON STRAND BOARD
CTR	CENTER	PC'S	PIECES
CLR	CLEARANCE	P.E.N.	PLYWOOD EDGE NAILING
CONC	CONCRETE	PERIM.	PERIMETER
C.M.U.	CONC. MASONARY UNIT	PLT.	PLATE
CONN	CONNECT, CONNECTION	PLC'S	PLACES
CONST	CONSTRUCTION	PLY'D	PLYWOOD
CONT	CONTINUOUS	P.T	PRESSURE TREATED
CSK	COUNTERSINK	RAF.	RAFTERS
C.T.	COLLAR TIE	RDWD.	REDWOOD
DBL.	DOUBLE	REQ'D	REQUIRED
DET	DETAIL	REQ'T	REQUIREMENT
D.F.	DOUGLAS FIR	RET.	RETAINING
DIA	DIAGONAL	RF.	ROOF
DIAPH	DIAPHRAGM	S	SOUTH
DIM	DIMENSION	S.A.D.	SEE ARCH. DRW'GS
DIR	DIRECTION	S.G.E.	STRUCTURAL GABLE END
D.R.	DOOR	S.B.	STRONG BACK
D.F.	DOOR FRAME	SCH.	SCHEDULE
DWG	DRAWING	S.E.	SOUTHEAST
E	EAST	SEC.	SECTION
EA	EACH	SIM.	SIMILAR
E.F.	EACH FACE	SHT.	SHEET
ELEV	ELEVATION	SHT'G	SHEATHING
EMB	EMBEDMENT	SIMP.	SIMPSON COMPANY
E.N.	EDGE NAILING	SPC'G	SPACING
EQ.	EQUAL	SPECS	SPECIFICATIONS
E.W.	EACH WAY	SQ.	SQUARE
E.W.E.F.	EACH WAY EACH FACE	S.S.D.	SEE STR. DRW'GS
EXP	EXPANSION	STL	STEEL
EX.	EXISTING	STR.	STRUCTURAL
F.F.	FINISH FLOOR	S.W.	SOUTHWEST
F.H.	FULL HEIGHT	S.W.S.	SHEAR WALL SCHEDULE
F.H.O.B.	FULL HEIGHT OF BLDG.	S.W.T.	SHEAR WALL TYPE
F.W.O.B.	FULL WIDTH OF BLDG.	T&B	TOP AND BOTTOM
FIN	FINISH	T&G	TONGUE AND GROOVE
FLR	FLOOR	T.B.F.V.	TO BE FIELD VERIFIED
F.J.	FLOOR JOIST	T.D.	TIEDOWN OR HOLDOWN
F.L.O.M.	FULL LENGTH OF MEMBER	T.D.S.	TIEDOWN SCHEDULE
F.N.	FACE NAILED	T.N.	TOE NAIL
F.O.S.	FACE OF STUDS	T.O.	TOP OF
F.O.C.	FACE OF CONCRETE	T.O.C.	TOP OF CONCRETE
FNDN.	FOUNDATION	T.O.S.F.	TOP OF SUB-FLOOR
F.P.	FIREPLACE	T.O.W	TOP OF WALL
FRAM'G	FRAMING	TOT	TOTAL
FT.	FEET	TYP.	TYPICAL
FTG.	FOOTING	U.N.O.	UNLESS NOTED OTHERWISE
GALV.	GALVANIZED	U.O.N.	UNLESS OTHERWISE NOTED
GAR.	GARAGE	V.I.F.	VERIFY IN FIELD
GEN.	GENERAL	W	WEST
G.L.B.	GLU-LAM BEAM	WDW	WINDOW
GR.	GRADE	S.W.F.	STEEL WIDE FLANGE
HDR.	HEADER	W.W.F.	WELDED WIRE FABRIC
HT.	HEIGHT	W/	WITH
INFO.	INFORMATION	W/O	WITHOUT
INT.	INTERIOR	@	AT
J.H.	JOIST HANGER	'	FEET
JNT	JOINT	"	INCHES
JST	JOIST	||	PARALLEL
K.P.	KING POST	⊥	PERPENDICULAR
LOC.	LOCATION	&	AND
MANU.	MANUFACTURER	Ø	DIAMETER
MAT'L	MATERIAL	CL	CENTER LINE
MAX.	MAXIMUM	U	HANGER
		L	STEEL ANGLE

CBC TABLE 2304.10.1 FASTENING SCHEDULE

	DESCRIPTION OF BUILDING ELEMENTS	NUMBER AND TYPE OF FASTENER	SPACING AND LOCATION
	FLOOR		
24.	2" subfloor to joist or girder	2-16d common (3½" x 0.162")	Face nail
25.	2" plank (plank & beam - floor & roof)	2-16d common (3½" x 0.162")	Each bearing, face nail
26.	Built up girders and beams, 2" lumber layers	20 common (4" x 0.192")	32" o.c. face nail at top and bottom staggered on opposite sides
		10d box (3" x 0.128"); or 3" x 0.131" nails; or 3" 14 gage staples, 7/16" crown	24" o.c. face nail at top and bottom staggered on opposite sides
		And: 2-20d common (4" x 0.192"); or 3-10d box (3" x 0.128"); or 3-3" x 0.131" nails; or 3-3" 14 gage staples, 7/16" crown	Ends and at each splice, face nail
27.	Ledger strip supporting joists or rafters	3-16d common (3½" x 0.162"); or 4-10d box (3" x 0.128"); or 4-3" x 0.131" nails; or 4-3" 14 gage staples, 7/16" crown	Each joist or rafter, face nail
28.	Joist to band joist or rim joist	3-16d common (3½" x 0.162"); or 4-10d box (3" x 0.128"); or 4-3" x 0.131" nails; or 4-3" 14 gage staples, 7/16" crown	End nail
29.	Bridging or blocking to joist, rafter or truss	2-8d common (2½" x 0.131"); or 2-10d box (3" x 0.128"); or 2-3" x 0.131" nails; or 2-3" 14 gage staples, 7/16" crown	Each end, toenail

WOOD STRUCTURAL PANELS, SUBFLOOR, ROOF AND INTERIOR WALL SHEATHING TO FRAMING AND PARTICLEBOARD WALL SHEATHING TO FRAMING [a]

			Edges (Inches)	Intermediate Supports (Inches)
30.	⅜"- ½"	6d common or deformed (2" x 0.113") (subfloor and wall)	6"	12"
		8d common or deformed (2½" x 0.131") (roof) OR RSRS-01 (2⅜" x 0.113") nail (roof) [d]	6"	12"
		2⅜" x 0.113" nail (subfloor and wall)	6"	12"
		1 ¼" 16 gage staple, 7/16" crown (subfloor and wall)	4"	8"
		2⅜" x 0.113" nail (roof)	4"	8"
		1 ¼" 16 gage staple, 7/16" crown (roof)	3"	6"
31.	19/32" – ¾"	8d common (2½" x 0.113"); or 6d deformed (2" x 0.113") (subfloor and wall)	6"	12"
		8d common or deformed (2½" x 0.131") (roof) OR RSRS-01 (2⅜" x 0.113") nail (roof) [d]	6"	12"
		2⅜" x 0.113" nail; or 2" 16 gage staple, 7/16" crown	4"	8"
32.	⅞" – 1 ¼"	10d common (3" x 0.148"); or 8d deformed (2½" x 0.131")	6"	12"
	OTHER EXTERIOR WALL SHEATHING			
33.	½" fiberboard sheathing [b]	1 ½" galvanized roof nail (7/16" head diameter); or 1 ¼" 16 gage staple with 7/16" or 1" crown	3"	6"
34.	25/32" fiberboard sheathing [b]	1 ¾" galvanized roof nail (7/16" diameter head); or 1 ½" 16 gage staple with 7/16" or 1" crown	3"	6"
	WOOD STRUCTURAL PANELS, COMBINATION SUBFLOOR UNDERLAYMENT TO FRAMING			
35.	¾" and less	8d common (2½" x 0.131"); or 6d deformed (2" x 0.113")	6"	12"
36.	⅞"-1"	8d common (2½" x 0.131"); or 8d deformed (2½" x 0.131")	6"	12"
37.	1⅛"-1 ¼"	10d common (3" x 0.148"); or 8d deformed (2½" x 0.131")	6"	12"
	PANEL SIDING TO FRAMING			
38.	½" or less	6d corrosion-resistant siding (1⅞" x 0.106"); or 6d corrosion-resistant casing (2" x 0.099")	6"	12"
39.	⅝"	8d corrosion-resistant siding (2⅜" x 0.128"); or 8d corrosion-resistant casing (2½" x 0.113")	6"	12"
	INTERIOR PANELING			
40.	¼"	4d casing (1½" x 0.080"); or 4d finish (1½" x 0.072")	6"	12"
41.	⅜"	6d casing (2" x 0.099"); or 6d finish (Panel supports at 24 inches)	6"	12"

For SI: 1 inch = 25.4 mm.

a. Nails spaced at 6 inches at intermediate supports where spans are 48" or more. For nailing of wood structural panel and particleboard diaphragms and shear walls, refer to Section 2305. Nails for wall sheathing are permitted to be common, box or casing.
b. Spacing shall be 6 inches on center on the edges and 12 inches on center at intermediate supports for nonstructural applications. Panel supports at 16 inches (20 inches if strength axis in the long direction of the panel, unless otherwise marked).
c. Where a rafter is fastened to an adjacent parallel ceiling joist in accordance with this schedule and the ceiling joist is fastened to the top plate in accordance with this schedule, the number of toenails in the rafters shall be permitted to be reduced by one nail.
d. RSRS-01 is a Roof Sheathing Rink Shank nail meeting the specifications in ASTM F1667.

CBC TABLE 2304.10.1 FASTENING SCHEDULE

	DESCRIPTION OF BUILDING ELEMENTS	NUMBER AND TYPE OF FASTENER	SPACING AND LOCATION
	ROOF		
1.	Blocking between ceiling joists, rafters or trusses to top plate or other framing below	3 - 8d common (2½" × 0.131"); or 3-10d box (3" x 0.128"); or 3 - 3" × 0.131" nails; or 3 - 3" 14 gage staples, 7/16" crown	Each end, toenail
	Blocking between rafters or truss not at the wall top plate, to rafter or truss	2 - 8d common (2½" × 0.131") 2 - 3" × 0.131" nails 2 - 3" 14 gage staples	Each end, toenail
		2-16d common (3½" x 0.162") 3-3" x 0.131" nails 3-3" 14 gage staples	End nail
	Flat blocking to truss and web filler	16d common (3½" x 0.162") @ 6" o.c. 3" x 0.131" nails @ 6" o.c. 3" x 14 gage staples @ 6" o.c.	Face nail
2.	Ceiling joists to top plate	3-8d common (2½" x 0.131"); or 3-10d box (3" x 0.128"); or 3-3" x 0.131" nails; or 3-3" 14 gage staples, 7/16" crown	Each joist, toenail
3.	Ceiling joist not attached to parallel rafter, laps over partitions (no thrust) (See Section 2308.7.3.1, Table 2308.7.3.1)	3-16d common (3½" x 0.162"); or 4-10d box (3" x 0.128"); or 4-3" x 0.131" nails; or 4-3" 14 gage staples, 7/16" crown	Face nail
4.	Ceiling joists attached to parallel rafter (heel joint) (Section 2308.7.3.1 and Table 2308.7.3.1)	Per Table 2308.7.3.1	Face nail
5.	Collar tie to rafter	3-10d common (3" x 0.148"); or 4-10d box (3" x 0.128"); or 4-3" x 0.131" nails; or 4-3" 14 gage staples, 7/16" crown	Face nail
6.	Rafter or roof truss to top plate (See section 2308.7.5 and Table 2308.7.5)	3-10d common (3" x 0.148"); or 3-16d box (3½" x 0.135");or 4-10d box (3" x 0.128"); or 4-3" x 0.131" nails; or 4-3" 14 gage staples, 7/16" crown	Toenail (c)
7.	Roof rafters to ridge valley or hip rafters; or roof rafter to 2" ridge beam	2-16d common (3½" x 0.162"); or 3-10d box (3" x 0.128"); or 3-3" x 0.131" nails; or 3-3" 14 gage staples, 7/16" crown; or	End nail
		3-10d common (3" x 0.148"); or 4-16d box (3½" x 0.135"); or 4-10d box (3" x 0.128"); or 4-3" x 0.131" nails; or 4-3" 14 gage staples, 7/16" crown	Toenail
	WALL		
8.	Stud to Stud (not at braced wall panels)	16d common (3½" x 0.162");	24" o.c. face nail
		10d box (3" x 0.128"); or 3" x 0.131" nails; or 3-3" 14 gage staples, 7/16" crown	16" o.c. face nail
9.	Stud to stud and abutting studs at intersecting wall corners (at braced wall panels)	16d common (3½" x 0.162");	16" o.c. face nail
		16d box (3½" x 0.135");	12" o.c. face nail
		3" x 0.131" nails; or 3-3" 14 gage staples, 7/16" crown	12" o.c. face nail
10.	Built-up header (2" to 2" header)	16d common (3½" x 0.162");	16" o.c. face nail
		16d box (3½" x 0.135");	12" o.c. face nail
11.	Continuous header to stud	4-8d common (2½" x 0.131); or 4-10d box (3" x 0.128")	Toenail
12.	Top plate to top plate	16d common (3½" x 0.162"); or	16" o.c. face nail
		10d box (3" x 0.128"); or 3" x 0.131" nails; or 3" 14 gage staples, 7/16" crown	12" o.c. face nail
13.	Top plate to top plate, at end joints	8-16d common (3½" x 0.162"); or 12-10d box (3" x 0.128"); or 12-3" x 0.131" nails; or 12-3" 14 gage staples, 7/16" crown	Each side of end joint, face nail (min 24" lap splice length each side of end joint)
14.	Bottom plate to joist, rim joist, band joist or blocking (not at braced wall panels)	16d common (3½" x 0.162"); or	16" o.c. face nail
		16d box (3" x 0.135"); or 3" x 0.131" nails; or 3" 14 gage staples, 7/16" crown	12" o.c. face nail
15.	Bottom plate to joist, rim joist, band joist or blocking at braced wall panels	2-16d common (3½" x 0.162"); or 3-16d box (3" x 0.135"); or 4-3" x 0.131" nails; or 4-3" 14 gage staples, 7/16" crown	16" o.c. face nail
16.	Stud to top or bottom plate	4-8d common (2½" x 0.131"); or 4-10d box (3" x 0.128"); or 4-3" x 0.131" nails; or 4-3" 14 gage staples, 7/16" crown; or	Toenail
		2-16d common (3½" x 0.162"); or 3-10d box (3" x 0.128"); or 3-3" x 0.131" nails; or 3-3" 14 gage staples, 7/16" crown	End nail
17.	Top plates, laps at corners and intersections	2-16d common (3½" x 0.162"); or 3-10d box (3" x 0.128"); or 3-3" x 0.131" nails; or 3-3" 14 gage staples, 7/16" crown	Face nail
18.	1" brace to each stud and plate	2-8d common (2½" x 0.131"); or 2-10d box (3" x 0.128"); or 2-3" x 0.131" nails; or 2-3" 14 gage staples, 7/16" crown	Face nail
19.	1" x 6" sheathing to each bearing	2-8d common (2½" x 0.131"); or 2-10d box (3" x 0.128")	Face nail
20.	1" x 8" and wider sheathing to each bearing	3-8d common (2½" x 0.131"); or 3-10d box (3" x 0.128")	Face nail
	FLOOR		
21.	Joist to sill, top plate, or girder	3-8d common (2½" x 0.131"); or floor 3-10d box (3" x 0.128"); or 3-3" x 0.131" nails; or 3-3" 14 gage staples, 7/16" crown	Toenail
22.	Rim joist, band joist, or blocking to top plate, sill or other framing below	8d common (2½" x 0.131"); or 10d box (3" x 0.128"); or 3" x 0.131" nails; or 3" 14 gage staples, 7/16" crown	6" o.c., toenail
23.	1" x 6" subfloor or less to each joist	2-8d common (2½" x 0.131"); or 2-10d box (3" x 0.128");	Face nail

PROJECT SEISMIC DESIGN DATA

A. SEISMIC IMPORTANCE FACTOR, I = 1.0 AND RISK CATEGORY = II
B. MAPPED SPECTRAL RESPONSE ACCELERATIONS, Ss = 1.531g AND S_1 = 0.615g
C. SITE CLASS = C
D. SPECTRAL RESPONSE COEFFICIENTS, S_{DS} = 1.225g AND S_{D1} = 0.574g
E: SEISMIC DESIGN CATEGORY = D
F. BASIC SEISMIC-FORCE-RESISTING SYSTEM(S) = WOOD PANEL SHEAR WALL
G. SEISMIC RESPONSE COEFFICIENTS(S) Cs = 0.188
H. RESPONSE MODIFICATION FACTOR(S) R = 6.5
I. ANALYSIS PROCEDURE USED = EQUIVALENT LATERAL FORCE PROCEDURE

PROJECT WIND DESIGN DATA

A. BASIC WIND SPEED (3-SECOND GUST) MILES PER HOUR = 92
B. WIND IMPORTANCE FACTOR, I =1.0 AND OCCUPANCY CATEGORY = II
C. WIND EXPOSURE = C
D. INTERNAL PRESSURE COEFFICIENT, GC_{pi} = 0.18
E. DESIGN WIND PRESSURE = 8.07 PSF 00 TO 15 FEET
8.57 PSF 15 TO 20 FEET
8.98 PSF 20 TO 25 FEET

PROJECT FLOOR AND ROOF LIVE LOADS

A. FLOOR LIVE LOAD = 40 PSF
B. ROOF LIVE LOAD = 20 PSF

PROJECT GEOTECHNICAL DESIGN DATA

A. GEOTECHNICAL REPORT : ROCK SOLID ENGINEERING, INC. JOB NO. 21011 DATED MAY 7, 2021.
B. SOIL BEARING PRESSURE : 1500 PSF (DEAD LOAD + LIVE LOAD)

PROJECT RAIN PRECIPITAITON DATA

A. 15-MINUTE INTENSITY = 3.00 IN
B. 60-MINUTE INTENSITY = 1.50 IN

SPECIAL INSPECTION REQUIRED FOR

1. Shearwall construction/nailing for shearwalls with 4" or closer E.N. (EOR or City Approved 3rd Party Inspector)
2. Shop and Field Welding (City Approved 3rd Party Inspector)

REGISTERED PROFESSIONAL ENGINEER
PETER K. SUNG
No. 46256
12-31-22
CIVIL
STATE OF CALIFORNIA

SUNG ENGINEERING, INC.
CIVIL ENGINEERS
29300 KOHOUTEK WAY, SUITE 190
UNION CITY, CA. 94587
PHONE (510) 475-7900
FAX (510) 475-7913
e-mail : psung@sungengr.com

OCEGUERA RESIDENCE
13115 UVAS ROAD
MORGAN HILL, CALIFORNIA

REVISIONS/DATE BY

Engineer: PS/AM
Drafter: DY
Date: 1/3/2021
Scale: AS NOTED
Job No: 221141

SHEET
STD1

DRAWING NAME: O:\Project\2021 JOBS\221141- OCEGUERA (CAD)\STRUCTURAL\STRUCT (OAC) 12.06.21\221141-STD1.dwg
PLOT DATE: 01-18-22 PLOTTED BY: cdong

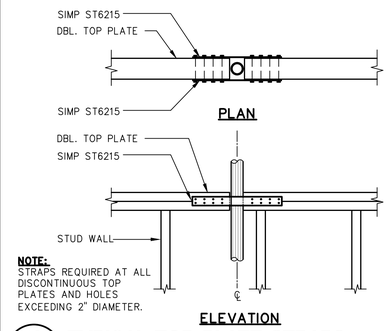

NOTE:
STRAPS REQUIRED AT ALL DISCONTINUOUS TOP PLATES AND HOLES EXCEEDING 2" DIAMETER.

10 TYPICAL TOP PLATE STRAPS

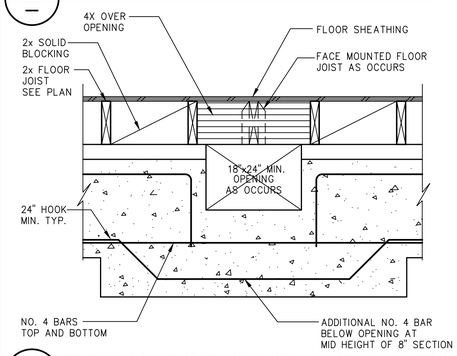

11 TYPICAL CRAWL SPACE ACCESS OPENING

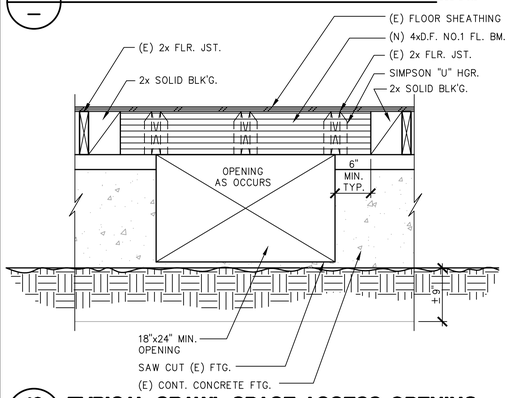

12 TYPICAL CRAWL SPACE ACCESS OPENING

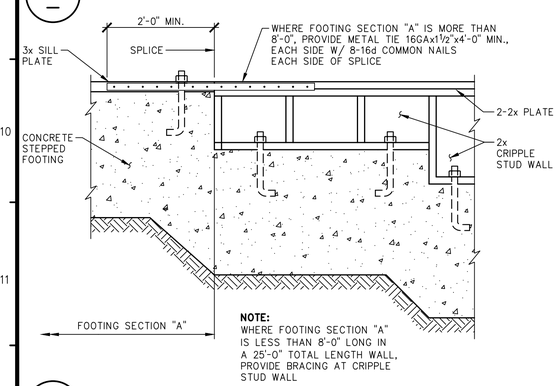

NOTE:
WHERE FOOTING SECTION "A" IS LESS THAN 8'-0" LONG IN A 25'-0" TOTAL LENGTH WALL, PROVIDE BRACING AT CRIPPLE STUD WALL

13 STEPPED FOOTING CONNECTION

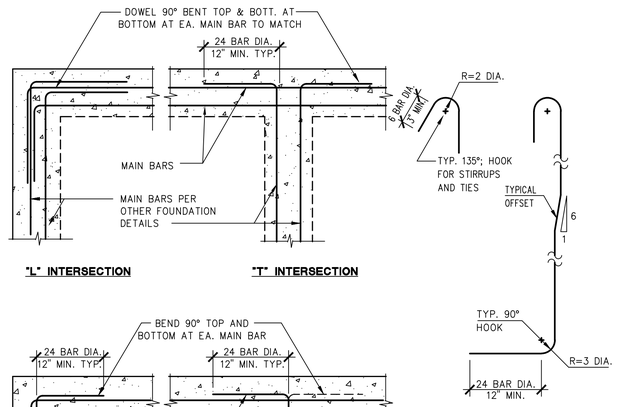

HORIZONTAL SPLICE SCHED.		
BAR SIZE	BAR DIA.	48 DIA.
#3	0.375"	1'-6"
#4	0.5"	2'-0"
#5	0.625"	2'-6"
#6	0.75"	3'-0"
#7	0.875"	3'-6"

7 TYP. HORIZONTAL CONCRETE REINFORCEMENT

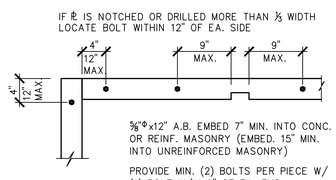

⅝"Φx12" A.B. EMBED 7" MIN. INTO CONC. OR REINF. MASONRY (EMBED. 15" MIN. INTO UNREINFORCED MASONRY)

PROVIDE MIN. (2) BOLTS PER PIECE W/ (1) BOLT W/IN 9" OF EA. END.

SPACE A.B.'s AT 48" O.C. FOR ONE STORY AND 48" O.C. AT TWO STORY BUILDING AREAS.

A NUT AND 3"x3"x¼" STL. PLATE WASHER ON EA. BOLT STL PLATE WASHER SHALL EXTEND TO WITHIN ½" OF THE EDGE OF THE SILL PLATE ON THE SIDE(S) WITH SHEATHING. SLOTTED HOLE WASHERS ARE ACCEPTABLE PER SECTION 4.3.6.4.3 OF THE SDPWS

MUDSILL SHALL BE 3x P.T.D.F. No. 1 (U.O.N.)

8 SILL PLATE DETAIL

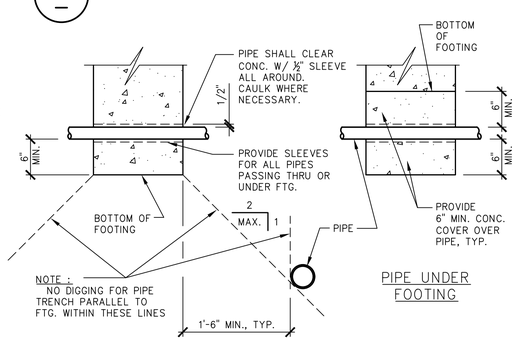

9 PIPE THRU FTG. AND PARALLEL TO FTG.

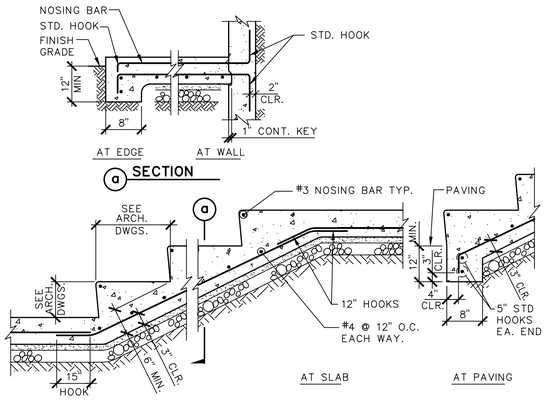

4 SLAB ON GRADE

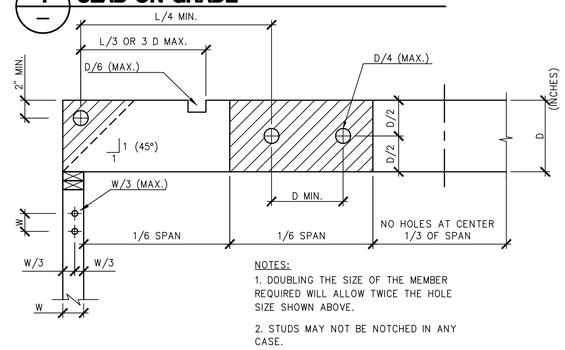

NOTES:
1. DOUBLING THE SIZE OF THE MEMBER REQUIRED WILL ALLOW TWICE THE HOLE SIZE SHOWN ABOVE.
2. STUDS MAY NOT BE NOTCHED IN ANY CASE.

5 HOLES & NOTCHES AT JOIST & STUD

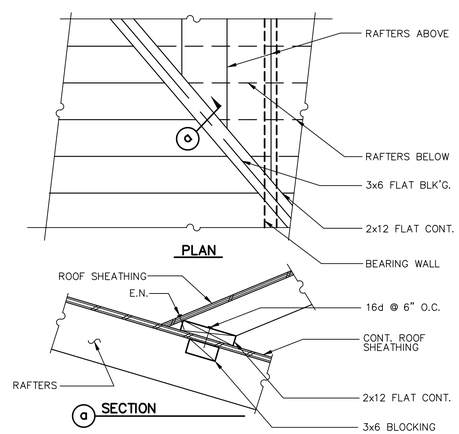

6 TYPICAL CALIFORNIA FRAMING

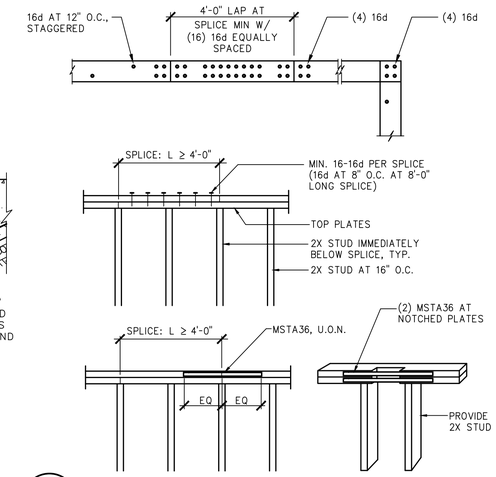

1 TYPICAL TOP PLATE SPLICE

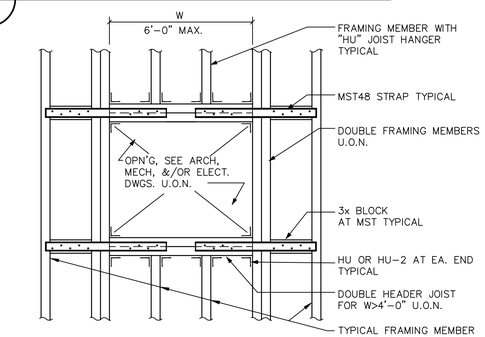

2 OPENING IN FRAME AROUND HORIZ. DIAPHRAGM SEE PLAN FOR LOCATION

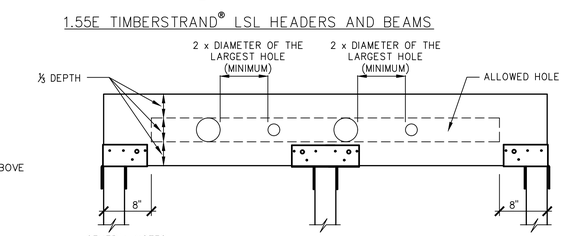

HEADER DEPTH	MAXIMUM ROUND HOLE SIZE
9¼"-9½"	3"
11¼"-11⅞"	3⅝"
14" TO 16"	4⅝"

GENERAL NOTES:
No rectangular holes
No holes in headers or beams in plank orientation

SEE ILLUSTRATION FOR ALLOWED HOLE ZONE

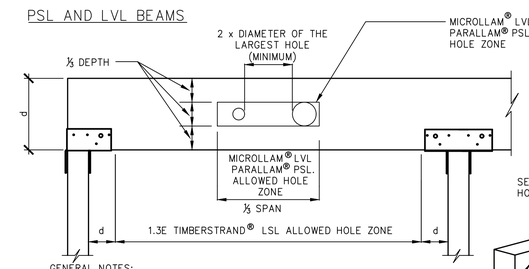

BEAM DEPTH	MAXIMUM ROUND HOLE SIZE
4⅜"	1"
5½"	1¾"
7¼" TO 20"	2"

SEE ILLUSTRATION FOR ALLOWED HOLE ZONE

GENERAL NOTES:
Allowed hole zone suitable for uniformly loaded headers and beams only.
No rectangular holes
No holes in cantilevers.
No holes in headers or beams in plank orientation

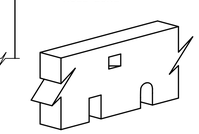

DO NOT cut, notch, or drill holes in headers except as indicaterd in the illustrations and tables above.

3 ALLOWABLE HOLES

REGISTERED PROFESSIONAL ENGINEER PETER K. SUNG No. 46256 Exp. 12-31-22 CIVIL STATE OF CALIFORNIA

SUNG ENGINEERING, INC.
CIVIL ENGINEERS
29300 KOHOUTEK WAY, SUITE 190
UNION CITY, CA 94587
PHONE (510) 475-7900
FAX (510) 475-7913
e-mail : psung@sungengr.com

OCEGUERA RESIDENCE
13115 UVAS ROAD
MORGAN HILL, CALIFORNIA

REVISIONS/DATE BY

Engineer: PS/AM
Drafter: DY
Date: 1/3/2021
Scale: AS NOTED
Job No: 221141

SHEET
STD2

DRAWING NAME: G:\Projects\2021 JOBS\221141- OCEGUERA (CAD)\STRUCTURAL\STRUCT (OAC) 12.06.21\221141-ST02.dwg
PLOT DATE: 01-18-22 PLOTTED BY: oddang

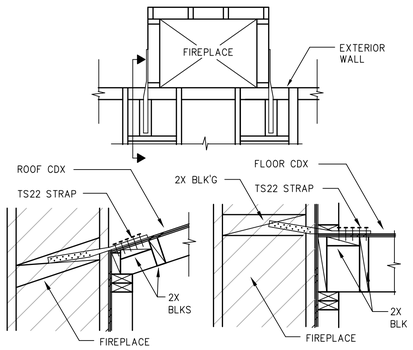

10 TYPICAL METALTIE FOR WOOD FRAME CHIMNEY

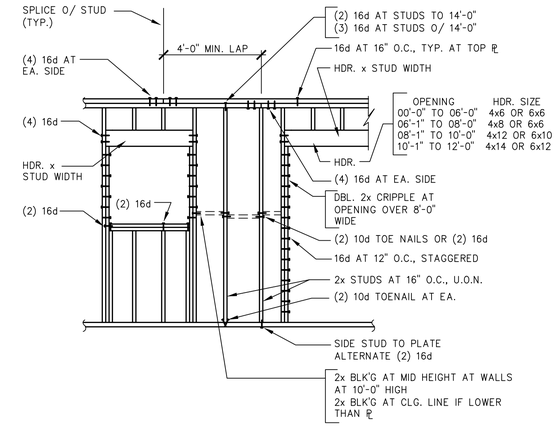

7 TYPICAL STUD WALL DETAIL

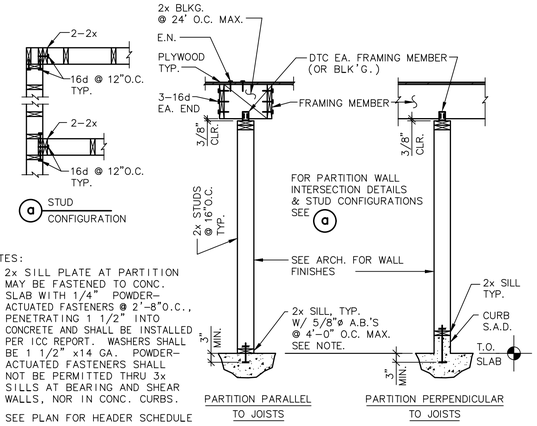

NOTES:
1. 2x SILL PLATE AT PARTITION MAY BE FASTENED TO CONC. SLAB WITH 1/4" POWDER-ACTUATED FASTENERS @ 2'-8"O.C., PENETRATING 1 1/2" INTO CONCRETE AND SHALL BE INSTALLED PER ICC REPORT. WASHERS SHALL BE 1 1/2" x14 GA. POWDER-ACTUATED FASTENERS SHALL NOT BE PERMITTED THRU 3x SILLS AT BEARING AND SHEAR WALLS, NOR IN CONC. CURBS.
2. SEE PLAN FOR HEADER SCHEDULE

4 NON-STRUCTURAL PARTITION

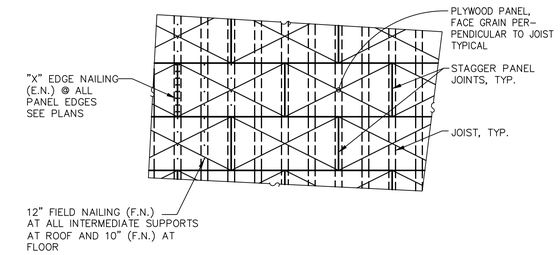

NOTES
1. USE 10d COMMON NAILS AT FLOORS; 8d COMMON NAILS AT ROOFS.
2. GLUE PLYWOOD TO FLOOR FRAMING MEMBERS PRIOR TO NAILING.
3. MINIMUM PLYWOOD WIDTH IS 24".
4. SEE GENERAL NOTES FOR PLYWOOD THICKNESS & GRADE.
5. PROVIDE SIMPSON "PSCL" CLIPS AT ALL UNSUPPORTED EDGES.

1 PLYWOOD SHEATHING AT ROOF AND FLOORS UNBLOCKED

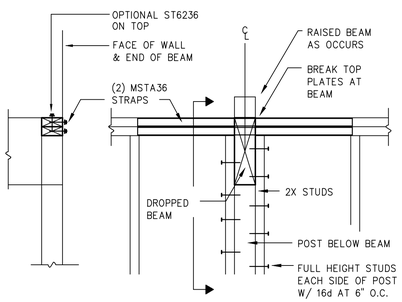

11 TYPICAL TOP PLATE SPLICE AT BEAM CONNECTION

NOTE :
OFFSET COIL STRAP AND PROVIDE 3x OR 4x SOLID BLK'G WHEN STUD WALL FRAMES ABOVE COLLECTOR LINE SEE a

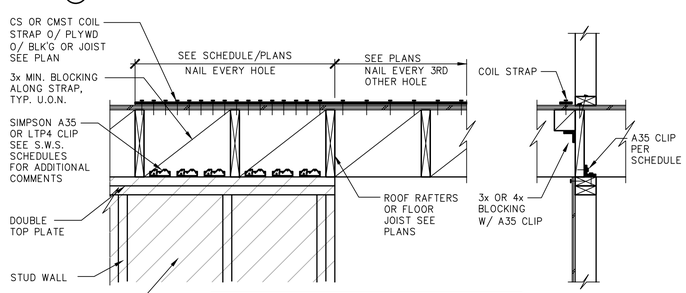

a SECTION

SCHEDULE		
COIL STRAP	LENGTH "L" INTO SHEAR WALL	No. OF CLIPS
CS16	24"	(4) A35"s
CS14	24"	(6) A35's
CMSTC16	36"	(7) LTP4/(10) A35's
CMST14	48"	(10) LTP4/(14) A35's

8 TYPICAL COIL STRAP DRAG CONNECTION AT ROOF

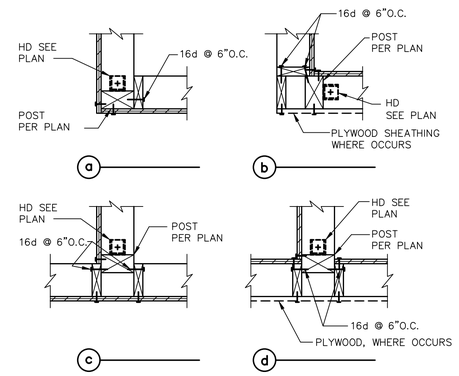

NOTE: ALL NAILING SHOWN TO BE PLYWOOD SHEAR WALL E.N., U.O.N.

5 SHEAR WALL INTERSECTIONS

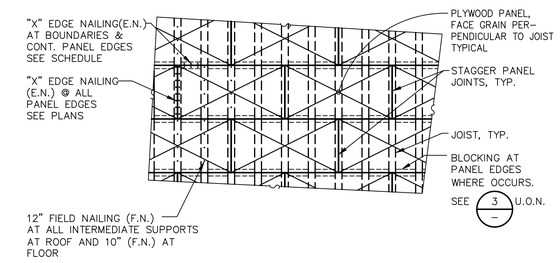

NOTES
1. USE 10d COMMON NAILS AT FLOORS; 8d COMMON NAILS AT ROOFS.
2. GLUE PLYWOOD TO FLOOR FRAMING MEMBERS PRIOR TO NAILING.
3. MINIMUM PLYWOOD WIDTH IS 24".
4. SEE GENERAL NOTES FOR PLYWOOD THICKNESS & GRADE.

2 PLYWOOD SHEATHING AT ROOF AND FLOORS REQUIRING SPECIAL BLOCKING AND EDGE NAIL SEE PLAN FOR LOCATION

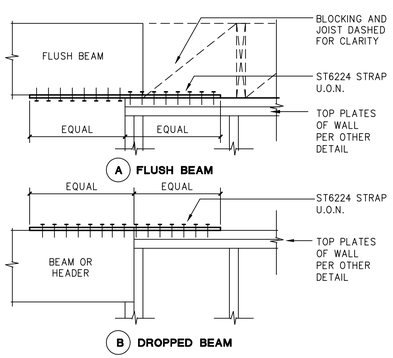

12 TYPICAL SHEAR COLLECTOR STRAP

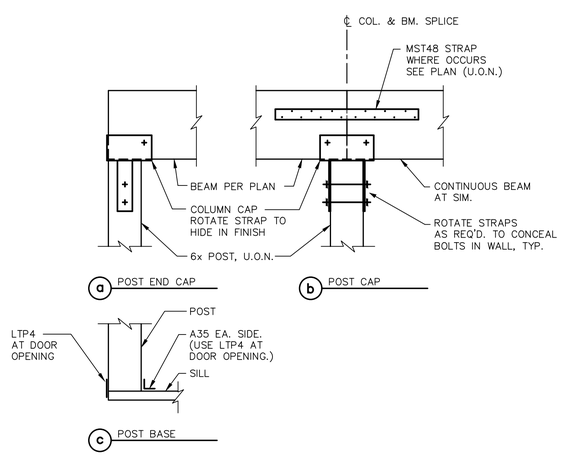

9 BEAM AND POST CONNECTION

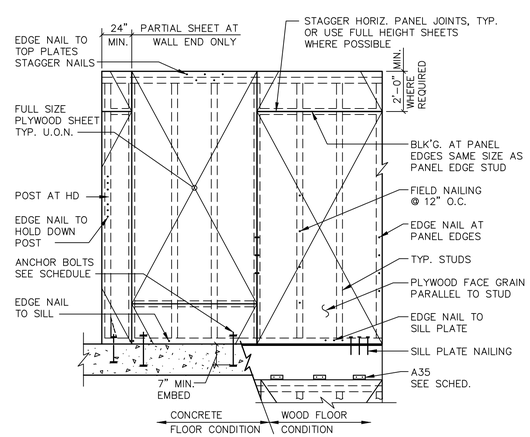

6 SHEAR WALL FRAMING ELEVATION

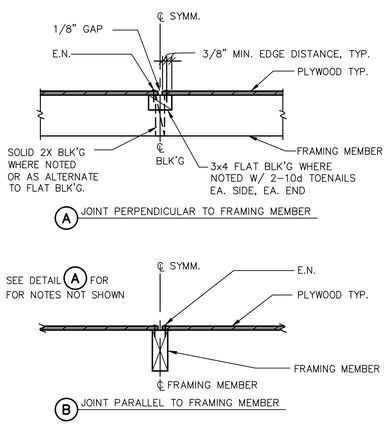

3 PLYWOOD NAILING

REGISTERED PROFESSIONAL ENGINEER PETER K. SUNG No. 46256 Exp. 12-31-22 CIVIL STATE OF CALIFORNIA

SUNG ENGINEERING, INC.
CIVIL ENGINEERS
29300 KOHOUTEK WAY, SUITE 190
UNION CITY, CA. 94587
PHONE (510) 475-7900
FAX (510) 475-7913
e-mail : psung@sungengr.com

OCEGUERA RESIDENCE
13115 UVAS ROAD
MORGAN HILL, CALIFORNIA

REVISIONS/DATE BY

Engineer: PS/AM
Drafter: DY
Date: 1/3/2021
Scale: AS NOTED
Job No: 221141

SHEET
STD3

DRAWING NAME: O:\Projects\2021 JOBS\221141- OCEGUERA (CAD)\STRUCTURAL\STRUCT (OAC) 12.06.21\221141-STD3.dwg
PLOT DATE: 01-18-22 PLOTTED BY: cdang

GENERAL INFORMATION

01	Project Name	Alex & Deedee Oceguera / 13115 Uvas Rd		
02	Run Title	Title 24 Analysis		
03	Project Location	13115 Uvas Rd.		
04	City	Morgan Hill	05	Standards Version 2019
06	Zip code	95037	07	Software Version EnergyPro 8.2
08	Climate Zone	4	09	Front Orientation (deg/ Cardinal) 0
10	Building Type	Single family	11	Number of Dwelling Units 1
12	Project Scope	NewConstruction	13	Number of Bedrooms 5
14	Addition Cond. Floor Area (ft^2)	0	15	Number of Stories 1
16	Existing Cond. Floor Area (ft^2)	n/a	17	Fenestration Average U-factor 0.32
18	Total Cond. Floor Area (ft^2)	3941	19	Glazing Percentage (%) 16.62%
20	ADU Bedroom Count	n/a	21	ADU Conditioned Floor Area n/a
22	Is Natural Gas Available?	Yes		

COMPLIANCE RESULTS

01	Building Complies with Computer Performance
02	This building incorporates features that require field testing and/or verification by a certified HERS rater under the supervision of a CEC-approved HERS provider.
03	This building incorporates one or more Special Features shown below

ENERGY DESIGN RATING

	Energy Design Ratings		Compliance Margins	
	Efficiency[1] (EDR)	Total[2] (EDR)	Efficiency[1] (EDR)	Total[2] (EDR)
Standard Design	44.8	24.3		
Proposed Design	44.5	24	0.3	0.3

RESULT: [3] COMPLIES

1: Efficiency EDR includes improvements to the building envelope and more efficient equipment
2: Total EDR includes efficiency and demand response measures such as photovoltaic (PV) systems and batteries
3: Building complies when efficiency and total compliance margins are greater than or equal to zero

- Standard Design PV Capacity: 3.78 kWdc
- PV System resized to 3.78 kWdc (a factor of 3.778) to achieve 'Standard Design PV' PV scaling

ENERGY USE SUMMARY

Energy Use (kTDV/ft^2-yr)	Standard Design	Proposed Design	Compliance Margin	Percent Improvement
Space Heating	19.62	19.84	-0.22	-1.1
Space Cooling	6	4.46	1.54	25.7
IAQ Ventilation	5.68	5.68	0	0
Water Heating	7.94	8.81	-0.87	-11
Self Utilization/Flexibility Credit	n/a	0	0	n/a
Compliance Energy Total	**39.24**	**38.79**	**0.45**	**1.1**

REQUIRED PV SYSTEMS - SIMPLIFIED

01	02	03	04	05	06	07	08	09	10	11	12
DC System Size (kWdc)	Exception	Module Type	Array Type	Power Electronics	CFI	Azimuth (deg)	Tilt Input	Array Angle (deg)	Tilt: (x in 12)	Inverter Eff. (%)	Annual Solar Access (%)
3.78	NA	Standard	Fixed	none	true	150-270	n/a	n/a	<=7:12	96	100

REQUIRED SPECIAL FEATURES

The following are features that must be installed as condition for meeting the modeled energy performance for this computer analysis.

- Indoor air quality, balanced fan
- Non-standard roof reflectance
- Ceiling has high level of insulation
- Window overhangs and/or fins

HERS FEATURE SUMMARY

The following is a summary of the features that must be field-verified by a certified HERS Rater as a condition for meeting the modeled energy performance for this computer analysis. Additional detail is provided in the building tables below. Registered CF2Rs and CF3Rs are required to be completed in the HERS Registry

Building-level Verifications:
- Indoor air quality ventilation

Cooling System Verifications:
- Minimum Airflow
- Verified EER
- Verified SEER
- Fan Efficacy Watts/CFM

Heating System Verifications:
- -- None --

HVAC Distribution System Verifications:
- Duct leakage testing

Domestic Hot Water System Verifications:
- -- None --

BUILDING - FEATURES INFORMATION

01	02	03	04	05	06	07
Project Name	Conditioned Floor Area (ft^2)	Number of Dwelling Units	Number of Bedrooms	Number of Zones	Number of Ventilation Cooling Systems	Number of Water Heating Systems
Alex & Deedee Oceguera / 13115 Uvas Rd	3941	1	5	1	0	1

ZONE INFORMATION

01	02	03	04	05	06	07
Zone Name	Zone Type	HVAC System Name	Zone Floor Area (ft^2)	Avg. Ceiling Height	Water Heating System 1	Water Heating System 2
House	Conditioned	High Effic Gas FAU/ AC1	3941	9	DHW Sys 1	N/A

OPAQUE SURFACES

01	02	03	04	05	06	07	08
Name	Zone	Construction	Azimuth	Orientation	Gross Area (ft^2)	Window and Door Area (ft2)	Tilt (deg)
Front Wall	House	R-21 Wall	0	Front	762	199	90
Left Wall	House	R-21 Wall	90	Left	708	152	90
Back Wall	House	R-21 Wall	180	Back	790.7	192	90
Right Wall	House	R-21 Wall	270	Right	480	102	90
Interior Wall	House>>__Garage__	R-21 Wall1	n/a	n/a	228	21	n/a
Knee Walls	House	R-21 Wall1	n/a	n/a	641.9	0	n/a
Roof 2	House	R-49 Attic w/ Radiant	n/a	n/a	3931.2	n/a	n/a
Roof 3	__Garage__	R-0 Roof Attic	n/a	n/a	1089	n/a	n/a
Raised Floor	House	R-19 Floor Crawlspace	n/a	n/a	3941	n/a	n/a
Garage Front Wall	__Garage__	R-0 Wall	0	Front	473	252	90
Garage Back Wall	__Garage__	R-0 Wall	180	Back	473	37	90
Garage Right Wall	__Garage__	R-0 Wall	270	Right	278.7	21	90

OPAQUE SURFACES - CATHEDRAL CEILINGS

01	02	03	04	05	06	07	08	09	10	11
Name	Zone	Construction	Azimuth	Orientation	Area (ft^2)	Skylight Area (ft^2)	Roof Rise (x in 12)	Roof Reflectance	Roof Emittance	Cool Roof
Roof	House	R-49 Attic w/ Radiant1	0	Front	9.9	9.8	8	0.19	0.91	No

ATTIC

01	02	03	04	05	06	07	08
Name	Construction	Type	Roof Rise (x in 12)	Roof Reflectance	Roof Emittance	Radiant Barrier	Cool Roof
Attic __Garage__	Attic Garage Roof Cons	Ventilated	8	0.1	0.85	No	No
Attic House	Attic RoofHouse	Ventilated	8	0.19	0.91	Yes	No

FENESTRATION / GLAZING

01	02	03	04	05	06	07	08	09	10	11	12	13	14
Name	Type	Surface	Orientation	Azimuth	Width (ft)	Height (ft)	Mult.	Area (ft^2)	U-factor	U-factor Source	SHGC	SHGC Source	Exterior Shading
Window 4040 f1	Window	Front Wall	Front	0	4	4	1	16	0.32	NFRC	0.25	NFRC	Bug Screen
Window 4040 f2	Window	Front Wall	Front	0	4	4	1	16	0.32	NFRC	0.25	NFRC	Bug Screen
Window 5040	Window	Front Wall	Front	0			1	20	0.32	NFRC	0.25	NFRC	Bug Screen
Window 7050 f3	Window	Front Wall	Front	0	7	5	1	35	0.32	NFRC	0.25	NFRC	Bug Screen
Window 1650 f4	Window	Front Wall	Front	0	1.5	5	1	7.5	0.32	NFRC	0.25	NFRC	Bug Screen
Glazed Doors 6070 f5	Window	Front Wall	Front	0	6	7	1	42	0.35	NFRC	0.25	NFRC	Bug Screen
Window 1650 f6	Window	Front Wall	Front	0	1.5	5	1	7.5	0.32	NFRC	0.25	NFRC	Bug Screen
Window 7050 f7	Window	Front Wall	Front	0	7	5	1	35	0.32	NFRC	0.25	NFRC	Bug Screen
Window 5040 2	Window	Front Wall	Front	0			1	20	0.32	NFRC	0.25	NFRC	Bug Screen
Window 5040 3	Window	Left Wall	Left	90			1	20	0.32	NFRC	0.25	NFRC	Bug Screen
Window 4030	Window	Left Wall	Left	90			1	12	0.32	NFRC	0.25	NFRC	Bug Screen
Window 5040 4	Window	Left Wall	Left	90			1	20	0.32	NFRC	0.25	NFRC	Bug Screen
Window 6040 l1	Window	Left Wall	Left	90	6	4	1	24	0.32	NFRC	0.25	NFRC	Bug Screen
Window 5020 l2	Window	Left Wall	Left	90	5	2	1	10	0.32	NFRC	0.25	NFRC	Bug Screen
Window 6040 l3	Window	Left Wall	Left	90	6	4	1	24	0.32	NFRC	0.25	NFRC	Bug Screen
SGD 6070 l4	Window	Left Wall	Left	90	6	7	1	42	0.32	NFRC	0.25	NFRC	Bug Screen
Window 4030 2	Window	Back Wall	Back	180			1	12	0.32	NFRC	0.25	NFRC	Bug Screen
Window 4030 3	Window	Back Wall	Back	180			1	12	0.32	NFRC	0.25	NFRC	Bug Screen
Window 4030 4	Window	Back Wall	Back	180			1	12	0.32	NFRC	0.25	NFRC	Bug Screen
Window 3080 b1	Window	Back Wall	Back	180	3	8	1	24	0.32	NFRC	0.25	NFRC	Bug Screen
Window 9080 b2	Window	Back Wall	Back	180	9	8	1	72	0.32	NFRC	0.25	NFRC	Bug Screen
Window 3080 b3	Window	Back Wall	Back	180	3	8	1	24	0.32	NFRC	0.25	NFRC	Bug Screen
Window 5040 5	Window	Back Wall	Back	180			1	20	0.32	NFRC	0.25	NFRC	Bug Screen
Window 4040 b4	Window	Back Wall	Back	180	4	4	1	16	0.32	NFRC	0.25	NFRC	Bug Screen

FENESTRATION / GLAZING

01	02	03	04	05	06	07	08	09	10	11	12	13	14
Name	Type	Surface	Orientation	Azimuth	Width (ft)	Height (ft)	Mult.	Area (ft^2)	U-factor	U-factor Source	SHGC	SHGC Source	Exterior Shading
SGD 6070 r1	Window	Right Wall	Right	270	6	7	1	42	0.32	NFRC	0.25	NFRC	Bug Screen
Window 5040 r2	Window	Right Wall	Right	270	5	4	1	20	0.32	NFRC	0.25	NFRC	Bug Screen
Window 5040 6	Window	Right Wall	Right	270			1	20	0.32	NFRC	0.25	NFRC	Bug Screen
Window 5040 7	Window	Right Wall	Right	270			1	20	0.32	NFRC	0.25	NFRC	Bug Screen
Window 4040	Window	Garage Back Wall	Back	180			1	16	0.32	NFRC	0.25	NFRC	Bug Screen
20 Sun Tunnel	Skylight	Roof	Front	0			1	2.8	0.4	NFRC	0.27	NFRC	None
20 Sun Tunnel 2	Skylight	Roof	Front	0			1	2.8	0.4	NFRC	0.27	NFRC	None
20 Sun Tunnel 3	Skylight	Roof	Front	0			1	2.8	0.4	NFRC	0.27	NFRC	None
14 Sun Tunnel	Skylight	Roof	Front	0			1	1.4	0.51	NFRC	0.34	NFRC	None

OPAQUE DOORS

01	02	03	04
Name	Side of Building	Area (ft^2)	U-factor
Door 3070	Interior Wall	21	0.2
Garage Door 10090	Garage Front Wall	90	1
Garage Door 18090	Garage Front Wall	162	1
Door 3070 2	Garage Back Wall	21	0.5
Door 3070 3	Garage Right Wall	21	0.5

OVERHANGS AND FINS

01	02	03	04	05	06	07	08	09	10	11	12	13	14
Window	Overhang					Left Fin				Right Fin			
	Depth	Dist Up	Left Extent	Right Extent	Flap Ht.	Depth	Top Up	Dist L	Bot Up	Depth	Top Up	Dist R	Bot Up
Window 4040 f1	2	0.75	7.67	44.75	0	0	0	0	0	0	0	0	0

OVERHANGS AND FINS

01	02	03	04	05	06	07	08	09	10	11	12	13	14
Window	Overhang					Left Fin				Right Fin			
	Depth	Dist Up	Left Extent	Right Extent	Flap Ht.	Depth	Top Up	Dist L	Bot Up	Depth	Top Up	Dist R	Bot Up
Window 4040 f2	2	0.75	1.7	50.7	0	0	0	0	0	0	0	0	0
Window 7050 f3	9	0.75	23.83	2	0	0	0	0	0	0	0	0	0
Window 1650 f4	9	0.75	20.3	11	0	0	0	0	0	0	0	0	0
Glazed Doors 6070 f5	9	0.75	13.5	13.5	0	0	0	0	0	0	0	0	0
Window 1650 f6	9	0.75	11	20.3	0	0	0	0	0	0	0	0	0
Window 7050 f7	9	0.75	2	23.83	0	0	0	0	0	0	0	0	0
Window 6040 l1	2	5.7	3	3.7	0	0	0	0	0	0	0	0	0
Window 5020 l2	2	0.75	13.83	1.2	0	0	0	0	0	0	0	0	0
Window 6040 l3	2	0.75	3.83	10.2	0	0	0	0	0	0	0	0	0
SGD 6070 l4	28.7	0.75	2.3	1.7	0	0	0	0	0	0	0	0	0
Window 3080 b1	10	0.75	18.83	6.83	0	0	0	0	0	0	0	0	0
Window 9080 b2	10	0.75	9.83	9.83	0	0	0	0	0	0	0	0	0
Window 3080 b3	10	0.75	6.83	18.83	0	0	0	0	0	0	0	0	0
Window 4040 b4	2	0.75	51.25	5.75	0	0	0	0	0	0	0	0	0
SGD 6070 r1	28.7	0.75	1.7	2.3	0	0	0	0	0	0	0	0	0
Window 5040 r2	2	0.75	2.2	2.83	0	0	0	0	0	0	0	0	0

SLAB FLOORS

01	02	03	04	05	06	07	08
Name	Zone	Area (ft^2)	Perimeter (ft)	Edge Insul. R-value and Depth	Edge Insul. R-value and Depth	Carpeted Fraction	Heated
Slab-on-Grade	__Garage__	1089	111.3	none	0	0%	No

OPAQUE SURFACE CONSTRUCTIONS

01	02	03	04	05	06	07	08
Construction Name	Surface Type	Construction Type	Framing	Total Cavity R-value	Interior / Exterior Continuous R-value	U-factor	Assembly Layers
R-0 Wall	Exterior Walls	Wood Framed Wall	2x4 @ 16 in. O. C.	R-0	None / None	0.302	Inside Finish: Gypsum Board Cavity / Frame: no insul. / 2x4 Exterior Finish: Wood Siding/sheathing/decking
R-21 Wall	Exterior Walls	Wood Framed Wall	2x6 @ 16 in. O. C.	R-21	None / None	0.068	Inside Finish: Gypsum Board Cavity / Frame: R-21 / 2x6 Exterior Finish: All Other Siding
R-49 Attic w/ Radiant1	Cathedral Ceilings	Wood Framed Ceiling	2x4 @ 24 in. O. C.	R-49	None / None	0.03	Roofing: Light Roof (Asphalt Shingle) Roof Deck: Wood Siding/sheathing/decking Radiant Barrier Cavity / Frame: R-49 / 2x4 Inside Finish: Gypsum Board
R-21 Wall1	Interior Walls	Wood Framed Wall	2x6 @ 16 in. O. C.	R-21	None / None	0.064	Inside Finish: Gypsum Board Cavity / Frame: R-21 / 2x6 Other Side Finish: Gypsum Board
Attic Garage Roof Cons	Attic Roofs	Wood Framed Ceiling	2x4 @ 24 in. O. C.	R-0	None / None	0.644	Roofing: Light Roof (Asphalt Shingle) Roof Deck: Wood Siding/sheathing/decking Cavity / Frame: no insul. / 2x4

OPAQUE SURFACE CONSTRUCTIONS

01	02	03	04	05	06	07	08
Construction Name	Surface Type	Construction Type	Framing	Total Cavity R-value	Interior / Exterior Continuous R-value	U-factor	Assembly Layers
Attic RoofHouse	Attic Roofs	Wood Framed Ceiling	2x4 @ 24 in. O. C.	R-0	None / None	0.644	Roofing: Light Roof (Asphalt Shingle) Roof Deck: Wood Siding/sheathing/decking Cavity / Frame: no insul. / 2x4
R-19 Floor Crawlspace	Floors Over Crawlspace	Wood Framed Floor	2x10 @ 16 in. O. C.	R-19	None / None	0.046	Floor Surface: Carpeted Floor Deck: Wood Siding/sheathing/decking Cavity / Frame: R-19 / 2x10
R-0 Roof Attic	Ceilings (below attic)	Wood Framed Ceiling	2x4 @ 24 in. O. C.	R-0	None / None	0.481	Cavity / Frame: no insul. / 2x4 Inside Finish: Gypsum Board
R-49 Attic w/ Radiant	Ceilings (below attic)	Wood Framed Ceiling	2x4 @ 24 in. O. C.	R-49	None / None	0.02	Over Ceiling Joists: R-39.9 insul. Cavity / Frame: R-9.1 / 2x4 Inside Finish: Gypsum Board

BUILDING ENVELOPE - HERS VERIFICATION

01	02	03	04
Quality Insulation Installation (QII)	High R-value Spray Foam Insulation	Building Envelope Air Leakage	CFM50
Not Required	Not Required	Not Required	n/a

WATER HEATING SYSTEMS

01	02	03	04	05	06	07
Name	System Type	Distribution Type	Water Heater Name (#)	Solar Heating System	Compact Distribution	HERS Verification
DHW Sys 1	Domestic Hot Water (DHW)	Standard Distribution System	DHW Heater 1 (2)	n/a	None	n/a

NRG SOLUTIONS
Micah Seierstad
155 Novato Dr.
Vacaville, CA 95688
(530)545-1138
NRGMicah@gmail.com
TheNRGSolutions.com

Title-24 Energy Compliance

Alex & DeeDee Oceguera
13115 Uvas Rd.
Morgan Hill, CA 95037

T.1

2/2/20201

WATER HEATERS

01	02	03	04	05	06	07	08	09	10	11	12
Name	Heating Element Type	Tank Type	# of Units	Tank Vol. (gal)	Energy Factor or Efficiency	Input Rating or Pilot	Tank Insulation R-value (Int/Ext)	Standby Loss or Recovery Eff	1st Hr. Rating or Flow Rate	NEEA Heat Pump Brand or Model	Tank Location or Ambient Condition
DHW Heater 1	Gas	Consumer Instantaneous	2	0	0.92-UEF	200000-Btu/Hr	0	n/a	n/a	n/a	n/a

WATER HEATING - HERS VERIFICATION

01	02	03	04	05	06	07	08
Name	Pipe Insulation	Parallel Piping	Compact Distribution	Compact Distribution Type	Recirculation Control	Central DHW Distribution	Shower Drain Water Heat Recovery
DHW Sys 1 - 1/2	Not Required	Not Required	Not Required	None	Not Required	Not Required	Not Required

SPACE CONDITIONING SYSTEMS

01	02	03	04	05	06	07	08	09	10	11
Name	System Type	Heating Unit Name	Cooling Unit Name	Fan Name	Distribution Name	Required Thermostat Type	Status	Verified Existing Condition	Heating Equipment Count	Cooling Equipment Count
High Effic Gas FAU/ AC1	Heating and cooling system other	Heating Component 1	Cooling Component 1	HVAC Fan 1	Air Distribution System 1	Setback	New	NA	1	1

HVAC - HEATING UNIT TYPES

01	02	03	04
Name	System Type	Number of Units	Heating Efficiency
Heating Component 1	Central gas furnace	1	AFUE-97

HVAC - COOLING UNIT TYPES

01	02	03	04	05	06	07	08
Name	System Type	Number of Units	Efficiency EER/CEER	Efficiency SEER	Zonally Controlled	Multi-speed Compressor	HERS Verification
Cooling Component 1	Central split AC	1	13.5	18.3	Not Zonal	Single Speed	Cooling Component 1-hers-cool

HVAC COOLING - HERS VERIFICATION

01	02	03	04	05	06
Name	Verified Airflow	Airflow Target	Verified EER	Verified SEER	Verified Refrigerant Charge
Cooling Component 1-hers-cool	Required	350	Required	Required	Not Required

HVAC - DISTRIBUTION SYSTEMS

01	02	03	04	05	06	07	08	09	10	11	12
			Duct Ins. R-value		Duct Location		Surface Area				
Name	Type	Design Type	Supply	Return	Supply	Return	Supply	Return	Bypass Duct	Duct Leakage	HERS Verification
Air Distribution System 1	Unconditioned attic	Non-Verified	R-8	R-8	Attic	Attic	n/a	n/a	No Bypass Duct	Sealed and Tested	Air Distribution System 1-hers-dist

HVAC DISTRIBUTION - HERS VERIFICATION

01	02	03	04	05	06	07	08	09
Name	Duct Leakage Verification	Duct Leakage Target (%)	Verified Duct Location	Verified Duct Design	Buried Ducts	Deeply Buried Ducts	Low-leakage Air Handler	Low Leakage Ducts Entirely in Conditioned Space
Air Distribution System 1-hers-dist	Yes	5.0	Not Required	Not Required	Not Required	Credit not taken	Not Required	No

HVAC - FAN SYSTEMS

01	02	03	04
Name	Type	Fan Power (Watts/CFM)	Name
HVAC Fan 1	HVAC Fan	0.45	HVAC Fan 1-hers-fan

HVAC FAN SYSTEMS - HERS VERIFICATION

01	02	03
Name	Verified Fan Watt Draw	Required Fan Efficacy (Watts/CFM)
HVAC Fan 1-hers-fan	Required	0.45

IAQ (INDOOR AIR QUALITY) FANS

01	02	03	04	05	06
Dwelling Unit	IAQ CFM	IAQ Watts/CFM	IAQ Fan Type	IAQ Recovery Effectiveness (%)	IAQ Recovery Effectiveness - SREIAQ Recovery Effectiveness - SRE
SFam IAQVentRpt 1-1	160	0.575	Balanced HRV	66	n/a

DOCUMENTATION AUTHOR'S DECLARATION STATEMENT

1. I certify that this Certificate of Compliance documentation is accurate and complete.

Documentation Author Name: Micah Seierstad	Documentation Author Signature: Micah Seierstad
Company: NRG Solutions	Signature Date: 2021-01-18 09:05:20
Address: 155 Novato Dr.	CEA/ HERS Certification Identification (If applicable):
City/State/Zip: Vacaville, CA 95688	Phone: 530-545-1138

RESPONSIBLE PERSON'S DECLARATION STATEMENT

I certify the following under penalty of perjury, under the laws of the State of California:
1. I am eligible under Division 3 of the Business and Professions Code to accept responsibility for the building design identified on this Certificate of Compliance.
2. I certify that the energy features and performance specifications identified on this Certificate of Compliance conform to the requirements of Title 24, Part 1 and Part 6 of the California Code of Regulations.
3. The building design features or system design features identified on this Certificate of Compliance are consistent with the information provided on other applicable compliance documents, worksheets, calculations, plans and specifications submitted to the enforcement agency for approval with this building permit application.

Responsible Designer Name: Micah Seierstad	Responsible Designer Signature: Micah Seierstad
Company: NRG Solutions	Date Signed: 2021-01-18 09:05:20
Address: 155 Novato Dr.	License: N/A
City/State/Zip: Vacaville, CA 95688	Phone: 530-545-1138

Digitally signed by CalCERTS. This digital signature is provided in order to secure the content of this registered document, and in no way implies Registration Provider responsibility for the accuracy of the information.

Easy to Verify at CalCERTS.com

RESIDENTIAL MEASURES SUMMARY — RMS-1

Project Name	Building Type		Date
Nelly To / A.P.N. 249-55-058	☑ Single Family ☐ Multi Family ☐ Addition Alone ☑ Existing+ Addition/Alteration		12/17/2020
Project Address	**California Energy Climate Zone**	**Total Cond. Floor Area** / **Addition**	**# of Units**
326 N. 14th St. San Jose	CA Climate Zone 04	1,723 / 432	1

INSULATION

Construction	Type	Cavity	Area (ft^2)	Special Features	Status
Floor	Wood Framed w/Crawl Space	R 19	432		New
Wall	Wood Framed	R 15	439		New
Demising	Wood Framed	- no insulation	325		New
Roof	Wood Framed Attic	R 38	432		New
Floor	Wood Framed w/Crawl Space	R 19	1,291		Altered
Wall	Wood Framed	- no insulation	146		Existing
Door	Opaque Door	- no insulation	20		Existing
Wall	Wood Framed	- no insulation	261		Existing

FENESTRATION Total Area: 263 Glazing Percentage: 15.3% New/Altered Average U-Factor: 0.32

Orientation	Area(ft^2)	U-Fac	SHGC	Overhang	Sidefins	Exterior Shades	Status
Left (NW)	30.5	0.320	0.27	none	none	N/A	New
Rear (NE)	54.0	0.320	0.27	none	none	N/A	New
Right (SE)	20.0	0.320	0.27	none	none	N/A	New
Front (SW)	63.0	1.040	0.76	none	none	N/A	Existing
Left (NW)	16.5	0.320	0.27	none	none	N/A	Altered
Right (SE)	6.0	0.320	0.27	none	none	N/A	Altered
Right (SE)	72.8	1.040	0.76	none	none	N/A	Existing

HVAC SYSTEMS

Qty.	Heating	Min. Eff	Cooling	Min. Eff	Thermostat	Status
1	Central Furnace	96% AFUE	Split Air Conditioner	15.0 SEER	Setback	Altered

HVAC DISTRIBUTION

Location	Heating	Cooling	Duct Location	Duct R-Value	Status
Altered FAU	Ducted	Ducted	Crawlspace	8.0	New

WATER HEATING

Qty.	Type	Gallons	Min. Eff	Distribution	Status

RESIDENTIAL MEASURES SUMMARY — RMS-1

Project Name	Building Type		Date
Nelly To / A.P.N. 249-55-058	☑ Single Family ☐ Multi Family ☐ Addition Alone ☑ Existing+ Addition/Alteration		12/17/2020
Project Address	**California Energy Climate Zone**	**Total Cond. Floor Area** / **Addition**	**# of Units**
326 N. 14th St. San Jose	CA Climate Zone 04	1,723 / 432	1

INSULATION

Construction	Type	Cavity	Area (ft^2)	Special Features	Status
Wall	Wood Framed	- no insulation	305		Existing
Roof	Wood Framed Attic	R 38	1,291		Altered

FENESTRATION Total Area: 263 Glazing Percentage: 15.3% New/Altered Average U-Factor: 0.32

Orientation	Area(ft^2)	U-Fac	SHGC	Overhang	Sidefins	Exterior Shades	Status

HVAC SYSTEMS

Qty.	Heating	Min. Eff	Cooling	Min. Eff	Thermostat	Status

HVAC DISTRIBUTION

Location	Heating	Cooling	Duct Location	Duct R-Value	Status

WATER HEATING

Qty.	Type	Gallons	Min. Eff	Distribution	Status

HVAC SYSTEM HEATING AND COOLING LOADS SUMMARY

Project Name	Date
Alex & Deedee Oceguera / A.P.N. 756-19-021, 756-19-017	1/18/2021
System Name	**Floor Area**
High Effic Gas FAU/ AC	3,941

ENGINEERING CHECKS		SYSTEM LOAD	COIL COOLING PEAK CFM	COIL COOLING PEAK Sensible	COIL COOLING PEAK Latent	COIL HTG. PEAK CFM	COIL HTG. PEAK Sensible
Number of Systems	1						
Heating System							
Output per System	78,000	Total Room Loads	1,479	30,640	1,824	841	32,510
Total Output (Btuh)	78,000	Return Vented Lighting		0			
Output (Btuh/sqft)	19.8	Return Air Ducts		1,196			1,540
Cooling System		Return Fan		0			0
Output per System	47,500	Ventilation	0	0	0	0	0
Total Output (Btuh)	47,500	Supply Fan		0			0
Total Output (Tons)	4.0	Supply Air Ducts		1,196			1,540
Total Output (Btuh/sqft)	12.1						
Total Output (sqft/Ton)	995.6	TOTAL SYSTEM LOAD		33,032	1,824		35,591
Air System							
CFM per System	0	**HVAC EQUIPMENT SELECTION**					
Airflow (cfm)	0	High Efficiency Fau/AC		44,444	0		78,000
Airflow (cfm/sqft)	0.00						
Airflow (cfm/Ton)	0.0						
Outside Air (%)	0.0%	Total Adjusted System Output (Adjusted for Peak Design conditions)		44,444	0		78,000
Outside Air (cfm/sqft)	0.00						
Note: values above given at ARI conditions		TIME OF SYSTEM PEAK		Aug 3 PM			Jan 1 AM

HEATING SYSTEM PSYCHROMETRICS (Airstream Temperatures at Time of Heating Peak)

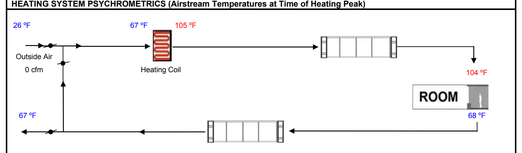

COOLING SYSTEM PSYCHROMETRICS (Airstream Temperatures at Time of Cooling Peak)

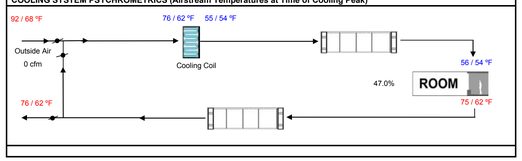

NRG SOLUTIONS
Micah Seierstad
155 Novato Dr.
Vacaville, CA 95688
(530)545-1138
NRGMicah@gmail.com
TheNRGSolutions.com

Title-24 Energy Compliance

Alex & DeeDee Oceguera
13115 Uvas Rd.
Morgan Hill, CA 95037

T.2

2/2/2021

2019 Low-Rise Residential Mandatory Measures Summary

NOTE: Low-rise residential buildings subject to the Energy Standards must comply with all applicable mandatory measures, regardless of the compliance approach used. Review the respective section for more information. "Exceptions may apply.

(01/2020)

Building Envelope Measures:	
§ 110.6(a)1:	**Air Leakage.** Manufactured fenestration, exterior doors, and exterior pet doors must limit air leakage to 0.3 CFM per square foot or less when tested per NFRC-400, ASTM E283 or AAMA/WDMA/CSA 101/I.S.2/A440-2011.`
§ 110.6(a)5:	**Labeling.** Fenestration products and exterior doors must have a label meeting the requirements of § 10-111(a).
§ 110.6(b):	**Field fabricated exterior doors and fenestration** products must use U-factors and solar heat gain coefficient (SHGC) values from Tables 110.6-A, 110.6-B, or JA4.5 for exterior doors. They must be caulked and/or weather-stripped.`
§ 110.7:	**Air Leakage.** All joints, penetrations, and other openings in the building envelope that are potential sources of air leakage must be caulked, gasketed, or weather stripped.
§ 110.8(a):	**Insulation Certification by Manufacturers.** Insulation must be certified by the Department of Consumer Affairs, Bureau of Household Goods and Services (BHGS).
§ 110.8(g):	**Insulation Requirements for Heated Slab Floors.** Heated slab floors must be insulated per the requirements of § 110.8(g).
§ 110.8(i):	**Roofing Products Solar Reflectance and Thermal Emittance.** The thermal emittance and aged solar reflectance values of the roofing material must meet the requirements of § 110.8(i) and be labeled per §10-113 when the installation of a cool roof is specified on the CF1R.
§ 110.8(j):	**Radiant Barrier.** When required, radiant barriers must have an emittance of 0.05 or less and be certified to the Department of Consumer Affairs.
§ 150.0(a):	**Ceiling and Rafter Roof Insulation.** Minimum R-22 insulation in wood-frame ceiling; or the weighted average U-factor must not exceed 0.043. Minimum R-19 or weighted average U-factor of 0.054 or less in a rafter roof alteration. Attic access doors must have permanently attached insulation using adhesive or mechanical fasteners. The attic access must be gasketed to prevent air leakage. Insulation must be installed in direct contact with a continuous roof or ceiling which is sealed to limit infiltration and exfiltration as specified in § 110.7, including but not limited to placing insulation either above or below the roof deck or along the plane of a drywall ceiling.`
§ 150.0(b):	**Loose-fill Insulation.** Loose fill insulation must meet the manufacturer's required density for the labeled R-value.
§ 150.0(c):	**Wall Insulation.** Minimum R-13 insulation in 2x4 inch wood framing wall or have a U-factor of 0.102 or less, or R-20 in 2x6 inch wood framing or have a U-factor of 0.071 or less. Opaque non-framed assemblies must have an overall assembly U-factor not exceeding 0.102. Masonry walls must meet Tables 150.1-A or B.`
§ 150.0(d):	**Raised-floor Insulation.** Minimum R-19 insulation in raised wood framed floor or 0.037 maximum U-factor.`
§ 150.0(f):	**Slab Edge Insulation.** Slab edge insulation must meet all of the following: have a water absorption rate, for the insulation material alone without facings, no greater than 0.3 percent; have a water vapor permeance no greater than 2.0 perm per inch; be protected from physical damage and UV light deterioration; and, when installed as part of a heated slab floor, meet the requirements of § 110.8(g).
§ 150.0(g)1:	**Vapor Retarder.** In climate zones 1 through 16, the earth floor of unvented crawl space must be covered with a Class I or Class II vapor retarder. This requirement also applies to controlled ventilation crawl space for buildings complying with the exception to § 150.0(d).
§ 150.0(g)2:	**Vapor Retarder.** In climate zones 14 and 16, a Class I or Class II vapor retarder must be installed on the conditioned space side of all insulation in all exterior walls, vented attics, and unvented attics with air-permeable insulation.
§ 150.0(q):	**Fenestration Products.** Fenestration, including skylights, separating conditioned space from unconditioned space or outdoors must have a maximum U-factor of 0.58; or the weighted average U-factor of all fenestration must not exceed 0.58.`
Fireplaces, Decorative Gas Appliances, and Gas Log Heaters:	
§ 110.5(e)	**Pilot Light.** Continuously burning pilot lights are not allowed for indoor and outdoor fireplaces.
§ 150.0(e)1:	**Closable Doors.** Masonry or factory-built fireplaces must have a closable metal or glass door covering the entire opening of the firebox.
§ 150.0(e)2:	**Combustion Intake.** Masonry or factory-built fireplaces must have a combustion outside air intake, which is at least six square inches in area and is equipped with a readily accessible, operable, and tight-fitting damper or combustion-air control device.`
§ 150.0(e)3:	**Flue Damper.** Masonry or factory-built fireplaces must have a flue damper with a readily accessible control.`
Space Conditioning, Water Heating, and Plumbing System Measures:	
§ 110.0-§ 110.3:	**Certification.** Heating, ventilation and air conditioning (HVAC) equipment, water heaters, showerheads, faucets, and all other regulated appliances must be certified by the manufacturer to the California Energy Commission.`
§ 110.2(a):	**HVAC Efficiency.** Equipment must meet the applicable efficiency requirements in Table 110.2-A through Table 110.2-K.`
§ 110.2(b):	**Controls for Heat Pumps with Supplementary Electric Resistance Heaters.** Heat pumps with supplementary electric resistance heaters must have controls that prevent supplementary heater operation when the heating load can be met by the heat pump alone; and in which the cut-on temperature for compression heating is higher than the cut-on temperature for supplementary heating, and the cut-off temperature for compression heating is higher than the cut-off temperature for supplementary heating.`
§ 110.2(c):	**Thermostats.** All heating or cooling systems not controlled by a central energy management control system (EMCS) must have a setback thermostat.`
§ 110.3(c)4:	**Water Heating Recirculation Loops Serving Multiple Dwelling Units.** Water heating recirculation loops serving multiple dwelling units must meet the air release valve, backflow prevention, pump priming, pump isolation valve, and recirculation loop connection requirements of § 110.3(c)4.
§ 110.3(c)6:	**Isolation Valves.** Instantaneous water heaters with an input rating greater than 6.8 kBtu per hour (2 kW) must have isolation valves with hose bibbs or other fittings on both cold and hot water lines to allow for flushing the water heater when the valves are closed.
§ 110.5:	**Pilot Lights.** Continuously burning pilot lights are prohibited for natural gas: fan-type central furnaces; household cooking appliances (except appliances without an electrical supply voltage connection with pilot lights that consume less than 150 Btu per hour); and pool and spa heaters.`
§ 150.0(h)1:	**Building Cooling and Heating Loads.** Heating and/or cooling loads are calculated in accordance with the ASHRAE Handbook, Equipment Volume, Applications Volume, and Fundamentals Volume; the SMACNA Residential Comfort System Installation Standards Manual; or the ACCA Manual J using design conditions specified in § 150.0(h)2.

2019 Low-Rise Residential Mandatory Measures Summary

§ 150.0(h)3A:	**Clearances.** Air conditioner and heat pump outdoor condensing units must have a clearance of at least five feet from the outlet of any dryer vent.
§ 150.0(h)3B:	**Liquid Line Drier.** Air conditioners and heat pump systems must be equipped with liquid line filter driers if required, as specified by the manufacturer's instructions.
§ 150.0(j)1:	**Storage Tank Insulation.** Unfired hot water tanks, such as storage tanks and backup storage tanks for solar water-heating systems, must have a minimum of R-12 external insulation or R-16 internal insulation where the internal insulation R-value is indicated on the exterior of the tank.
§ 150.0(j)2A:	**Water Piping, Solar Water-heating System Piping, and Space Conditioning System Line Insulation.** All domestic hot water piping must be insulated as specified in Section 609.11 of the California Plumbing Code. In addition, the following piping conditions must have a minimum insulation wall thickness of one inch or a minimum insulation R-value of 7.7: the first five feet of cold water pipes from the storage tank; all hot water piping with a nominal diameter equal to or greater than 3/4 inch and less than one inch; all hot water piping with a nominal diameter less than 3/4 inch that is: associated with a domestic hot water recirculation system, from the heating source to storage tank or between tanks, buried below grade, and from the heating source to kitchen fixtures.*
§ 150.0(j)3:	**Insulation Protection.** Piping insulation must be protected from damage, including that due to sunlight, moisture, equipment maintenance, and wind as required by Section 120.3(b). Insulation exposed to weather must be water retardant and protected from UV light (no adhesive tapes). Insulation covering chilled water piping and refrigerant suction piping located outside the conditioned space must include, or be protected by, a Class I or Class II vapor retarder. Pipe insulation buried below grade must be installed in a waterproof and non-crushable casing or sleeve.
§ 150.0(n)1:	**Gas or Propane Water Heating Systems.** Systems using gas or propane water heaters to serve individual dwelling units must include all of the following: A dedicated 125 volt, 20 amp electrical receptacle connected to the electric panel with a 120/240 volt 3 conductor, 10 AWG copper branch circuit, within three feet of the water heater without obstruction. Both ends of the unused conductor must be labeled with the word "spare" and be electrically isolated. Have a reserved single pole circuit breaker space in the electrical panel adjacent to the circuit breaker for the branch circuit pole labeled with the words "Future 240V Use"; a Category III or IV vent, or a Type B vent with straight pipe between the outside termination and the space where the water heater is installed; a condensate drain that is no more than two inches higher than the base of the water heater, and allows natural draining without pump assistance; and a gas supply line with a capacity of at least 200,000 Btu per hour.
§ 150.0(n)2:	**Recirculating Loops.** Recirculating loops serving multiple dwelling units must meet the requirements of § 110.3(c)5.
§ 150.0(n)3:	**Solar Water-heating Systems.** Solar water-heating systems and collectors must be certified and rated by the Solar Rating and Certification Corporation (SRCC), the International Association of Plumbing and Mechanical Officials, Research and Testing (IAPMO R&T), or by a listing agency that is approved by the Executive Director.
Ducts and Fans Measures:	
§ 150.0(d)3:	**Ducts.** Insulation installed on an existing space-conditioning duct must comply with § 604.0 of the California Mechanical Code (CMC). If a contractor installs the insulation, the contractor must certify to the customer, in writing, that the insulation meets this requirement.
§ 150.0(m)1:	**CMC Compliance.** All air-distribution system ducts and plenums must meet the requirements of the CMC §§ 601.0, 602.0, 603.0, 604.0, 605.0 and ANSI/SMACNA-006-2006 HVAC Duct Construction Standards Metal and Flexible 3rd Edition. Portions of supply-air and return-air ducts and plenums must be insulated to a minimum installed level of R-6.0 or a minimum installed level of R-4.2 when ducts are entirely in conditioned space as confirmed through field verification and diagnostic testing (RA3.1.4.3.8). Portions of the duct system completely exposed and surrounded by directly conditioned space are not required to be insulated. Connections of metal ducts and inner core of flexible ducts must be mechanically fastened. Openings must be sealed with mastic, tape, or other duct-closure system that meets the applicable requirements of UL 181, UL 181A, or UL 181B or aerosol sealant that meets the requirements of UL 723. If mastic or tape is used to seal openings greater than ¼ inch, the combination of mastic and fiber reinforced mesh or tape must be used. Building cavities, support platforms for air handlers, and plenums designed or constructed with materials other than sealed sheet metal, duct board or flexible duct must not be used to convey conditioned air. Building cavities and support platforms may contain ducts. Ducts installed in cavities and support platforms must not be compressed to cause reductions in the cross-sectional area.`
§ 150.0(m)2:	**Factory-Fabricated Duct Systems.** Factory-fabricated duct systems must comply with applicable requirements for duct construction, connections, and closures; joints and seams of duct systems and their components must not be sealed with cloth back rubber adhesive duct tapes unless such tape is used in combination with mastic and draw bands.
§ 150.0(m)3:	**Field-Fabricated Duct Systems.** Field-fabricated duct systems must comply with applicable requirements for: pressure-sensitive tapes, mastics, sealants, and other requirements specified for duct construction.
§ 150.0(m)7:	**Backdraft Damper.** Fan systems that exchange air between the conditioned space and outdoors must have backdraft or automatic dampers.
§ 150.0(m)8:	**Gravity Ventilation Dampers.** Gravity ventilating systems serving conditioned space must have either automatic or readily accessible, manually operated dampers in all openings to the outside, except combustion inlet and outlet air openings and elevator shaft vents.
§ 150.0(m)9:	**Protection of Insulation.** Insulation must be protected from damage, sunlight, moisture, equipment maintenance, and wind. Insulation exposed to weather must be suitable for outdoor service. For example, protected by aluminum, sheet metal, painted canvas, or plastic cover. Cellular foam insulation must be protected as above or painted with a coating that is water retardant and provides shielding from solar radiation.
§ 150.0(m)10:	**Porous Inner Core Flex Duct.** Porous inner core flex ducts must have a non-porous layer between the inner core and outer vapor barrier.
§ 150.0(m)11:	**Duct System Sealing and Leakage Test.** When space conditioning systems use forced air ducts to supply conditioned air to an occupiable space, the ducts must be sealed and duct leakage tested, as confirmed through field verification and diagnostic testing, in accordance with § 150.0(m)11 and Reference Residential Appendix RA3.
§ 150.0(m)12:	**Air Filtration.** Space conditioning systems with ducts exceeding 10 feet and the supply side of ventilation systems must have MERV 13 or equivalent filters. Filters for space conditioning systems must have a two inch depth or can be one inch if sized per Equation 150.0-A. Pressure drops and labeling must meet the requirements in § 150.0(m)12. Filters must be accessible for regular service.`
§ 150.0(m)13:	**Space Conditioning System Airflow Rate and Fan Efficacy.** Space conditioning systems that use ducts to supply cooling must have a hole for the placement of a static pressure probe, or a permanently installed static pressure probe in the supply plenum. Airflow must be ≥ 350 CFM per ton of nominal cooling capacity, and an air-handling unit fan efficacy ≤ 0.45 watts per CFM for gas furnace air handlers and ≤ 0.58 watts per CFM for all others. Small duct high velocity systems must provide an airflow ≥ 250 CFM per ton of nominal cooling capacity, and an air-handling unit fan efficacy ≤ 0.62 watts per CFM. Field verification testing is required in accordance with Reference Residential Appendix RA3.3.*

2019 Low-Rise Residential Mandatory Measures Summary

§ 150.0(k)2G:	**Interior Switches and Controls.** An energy management control system (EMCS) may be used to comply with control requirements if it: provides functionality of the specified control according to § 110.9; meets the Installation Certificate requirements of § 130.4; meets the EMCS requirements of § 130.0(e); and meets all other requirements in § 150.0(k)2.
§ 150.0(k)2H:	**Interior Switches and Controls.** A multiscene programmable controller may be used to comply with dimmer requirements in § 150.0(k) if it provides the functionality of a dimmer according to § 110.9, and complies with all other applicable requirements in § 150.0(k)2.
§ 150.0(k)2I:	**Interior Switches and Controls.** In bathrooms, garages, laundry rooms, and utility rooms, at least one luminaire in each of these spaces must be controlled by an occupant sensor or a vacancy sensor providing automatic-off functionality. If an occupant sensor is installed, it must be initially configured to manual-on operation using the manual control required under Section 150.0(k)2C.
§ 150.0(k)2J:	**Interior Switches and Controls.** Luminaires that are or contain light sources that meet Reference Joint Appendix JA8 requirements for dimming, and that are not controlled by occupancy or vacancy sensors, must have dimming controls.`
§ 150.0(k)2K:	**Interior Switches and Controls.** Under cabinet lighting must be controlled separately from ceiling-installed lighting systems.
§ 150.0(k)3A:	**Residential Outdoor Lighting.** For single-family residential buildings, outdoor lighting permanently mounted to a residential building, or to other buildings on the same lot, must meet the requirement in § 150.0(k)3Ai (Oil and CFT switch) and the requirements in either § 150.0(k)3Aii (photocell and either a motion sensor or automatic time switch control) or § 150.0(k)3Aiii (astronomical time clock), or an EMCS.
§ 150.0(k)3B:	**Residential Outdoor Lighting.** For low-rise residential buildings with four or more dwelling units, outdoor lighting for private patios, entrances, balconies, and porches; and residential parking lots and carports with less than eight vehicles per site must comply with either § 150.0(k)3A or with the applicable requirements in Sections 110.9, 130.0, 130.2, 130.4, 140.7 and 141.0.
§ 150.0(k)3C:	**Residential Outdoor Lighting.** For low-rise residential buildings with four or more dwelling units, any outdoor lighting for residential parking lots or carports with a total of eight or more vehicles per site and any outdoor lighting not regulated by § 150.0(k)3B or § 150.0(k)3D must comply with the applicable requirements in Sections 110.9, 130.0, 130.2, 130.4, 140.7 and 141.0.
§ 150.0(k)4:	**Internally illuminated address signs.** Internally illuminated address signs must comply with § 140.8; or must consume no more than 5 watts of power as determined according to § 130.0(c).
§ 150.0(k)5:	**Residential Garages for Eight or More Vehicles.** Lighting for residential parking garages for eight or more vehicles must comply with the applicable requirements for nonresidential garages in Sections 110.9, 130.0, 130.1, 130.4, 140.6, and 141.0.
§ 150.0(k)6A:	**Interior Common Areas of Low-rise Multifamily Residential Buildings.** In a low-rise multifamily residential building where the total interior common area in a single building equals 20 percent or less of the floor area, permanently installed lighting for the interior common areas in that building must be complying with Table 150.0-A and be controlled by an occupant sensor.
§ 150.0(k)6B:	**Interior Common Areas of Low-rise Multifamily Residential Buildings.** In a low-rise multifamily residential building where the total interior common area in a single building equals more than 20 percent of the floor area, permanently installed lighting for the interior common areas in that building must: i. Comply with the applicable requirements in Sections 110.9, 130.0, 130.1, 140.6 and 141.0; and ii. Lighting installed in corridors and stairwells must be controlled by occupant sensors that reduce the lighting power in each space by at least 50 percent. The occupant sensors must be capable of turning the light fully on and off from all designed paths of ingress and egress.
Solar Ready Buildings:	
§ 110.10(a)1:	**Single Family Residences.** Single family residences located in subdivisions with 10 or more single family residences and where the application for a tentative subdivision map for the residences has been deemed complete and approved by the enforcement agency, which do not have a photovoltaic system installed, must comply with the requirements of § 110.10(b) through § 110.10(e).
§ 110.10(a)2:	**Low-rise Multifamily Buildings.** Low-rise multi-family buildings that do not have a photovoltaic system installed must comply with the requirements of § 110.10(b) through § 110.10(d).
§ 110.10(b)1:	**Minimum Solar Zone Area.** The solar zone must have a minimum total area as described below. The solar zone must comply with access, pathway, smoke ventilation, and spacing requirements as specified in Title 24, Part 9 or other parts of Title 24 or in any requirements adopted by a local jurisdiction. The solar zone total area must be comprised of areas that have no dimension less than 5 feet and are no less than 80 square feet each for buildings with roof areas less than or equal to 10,000 square feet or no less than 160 square feet each for buildings with roof areas greater than 10,000 square feet. For single family residences, the solar zone must be located on the roof or overhang of the building and have a total area no less than 250 square feet. For low-rise multi-family buildings the solar zone must be located on the roof or overhang of the building, or on the roof or overhang of another structure located within 250 feet of the building, or on covered parking installed with the building project, and have a total area no less than 15 percent of the total roof area of the building excluding any skylight area. The solar zone requirement is applicable to the entire building, including mixed occupancy.`
§ 110.10(b)2:	**Azimuth.** All sections of the solar zone located on steep-sloped roofs must be oriented between 90 degrees and 300 degrees of true north.
§ 110.10(b)3A:	**Shading.** The solar zone must not contain any obstructions, including but not limited to: vents, chimneys, architectural features, and roof mounted equipment.`
§ 110.10(b)3B:	**Shading.** Any obstruction located on the roof or any other part of the building that projects above a solar zone must be located at least twice the distance, measured in the horizontal plane, of the height difference between the highest point of the obstruction and the horizontal projection of the nearest point of the solar zone, measured in the vertical plane.`
§ 110.10(b)4:	**Structural Design Loads on Construction Documents.** For areas of the roof designated as a solar zone, the structural design loads for roof dead load and roof live load must be clearly indicated on the construction documents.
§ 110.10(c):	**Interconnection Pathways.** The construction documents must indicate: a location reserved for inverters and metering equipment and a pathway reserved for routing of conduit from the solar zone to the point of interconnection with the electrical service; and for single family residences and central water-heating systems, a pathway reserved for routing plumbing from the solar zone to the water-heating system.
§ 110.10(d):	**Documentation.** A copy of the construction documents or a comparable document indicating the information from § 110.10(b) through § 110.10(c) must be provided to the occupant.
§ 110.10(e)1:	**Main Electrical Service Panel.** The main electrical service panel must have a minimum busbar rating of 200 amps.
§ 110.10(e)2:	**Main Electrical Service Panel.** The main electrical service panel must have a reserved space to allow for the installation of a double pole circuit breaker for a future solar electric installation. The reserved space must be permanently marked as "For Future Solar Electric".

2019 Low-Rise Residential Mandatory Measures Summary

Requirements for Ventilation and Indoor Air Quality:	
§ 150.0(o)1:	**Requirements for Ventilation and Indoor Air Quality.** All dwelling units must meet the requirements of ASHRAE Standard 62.2, Ventilation and Acceptable Indoor Air Quality in Residential Buildings subject to the amendments specified in § 150.0(o)1.
§ 150.0(o)1C:	**Single Family Detached Dwelling Units.** Single family detached dwelling units, and attached dwelling units not sharing ceilings or floors with other dwelling units, occupiable spaces, public garages, or commercial spaces must have mechanical ventilation airflow provided at rates determined by ASHRAE 62.2 Sections 4.1.1 and 4.1.2 and as specified in § 150.0(o)1C.
§ 150.0(o)1E:	**Multifamily Attached Dwelling Units.** Multifamily attached dwelling units must have mechanical ventilation airflow provided at rates in accordance with Equation 150.0-B and must be either a balanced system or continuous supply or continuous exhaust system. If a balanced system is not used, all units in the building must use the same system type and the dwelling-unit envelope leakage must be ≤ 0.3 CFM at 50 Pa (0.2 inch water) per square foot of dwelling unit envelope surface area and verified in accordance with Reference Residential Appendix RA3.8.
§ 150.0(o)1F:	**Multifamily Building Central Ventilation Systems.** Central ventilation systems that serve multiple dwelling units must be balanced to provide ventilation airflow for each dwelling unit served at a rate equal to or greater than the rate specified by Equation 150.0-B. All unit airflows must be within 20 percent of the unit with the lowest airflow rate as it relates to the individual unit's minimum required airflow rate needed for compliance.
§ 150.0(o)1G:	**Kitchen Range Hoods.** Kitchen range hoods must be rated for sound in accordance with Section 7.2 of ASHRAE 62.2.
§ 150.0(o)2:	**Field Verification and Diagnostic Testing.** Dwelling unit ventilation airflow must be verified in accordance with Reference Residential Appendix RA3.7. A kitchen range hood must be verified in accordance with Reference Residential Appendix RA3.7.4.3 to confirm it is rated by HVI to comply with the airflow rates and sound requirements as specified in Section 5 and 7.2 of ASHRAE 62.2.
Pool and Spa Systems and Equipment Measures:	
§ 110.4(a):	**Certification by Manufacturers.** Any pool or spa heating system or equipment must be certified to have all of the following: a thermal efficiency that complies with the Appliance Efficiency Regulations; an on-off switch mounted outside of the heater that allows shutting off the heater without adjusting the thermostat setting; a permanent weatherproof plate or card with operating instructions; and must not use electric resistance heating.`
§ 110.4(b)1:	**Piping.** Any pool or spa heating system or equipment must be installed with at least 36 inches of pipe between the filter and the heater, or dedicated suction and return lines, or built-in or built-up connections to allow for future solar heating.
§ 110.4(b)2:	**Covers.** Outdoor pools or spas that have a heat pump or gas heater must have a cover.
§ 110.4(b)3:	**Directional Inlets and Time Switches for Pools.** Pools must have directional inlets that adequately mix the pool water, and a time switch that will allow all pumps to be set or programmed to run only during off-peak electric demand periods.
§ 110.5:	**Pilot Light.** Natural gas pool and spa heaters must not have a continuously burning pilot light.
§ 150.0(p):	**Pool Systems and Equipment Installation.** Residential pool systems or equipment must meet the specified requirements for pump sizing, flow rate, piping, filters, and valves.`
Lighting Measures:	
§ 110.9:	**Lighting Controls and Components.** All lighting control devices and systems, ballasts, and luminaires must meet the applicable requirements of § 110.9.`
§ 150.0(k)1A:	**Luminaire Efficacy.** All installed luminaires must meet the requirements in Table 150.0-A.
§ 150.0(k)1B:	**Blank Electrical Boxes.** The number of electrical boxes that are more than five feet above the finished floor and do not contain a luminaire or other device must be no greater than the number of bedrooms. These electrical boxes must be served by a dimmer, vacancy sensor control, or fan speed control.
§ 150.0(k)1C:	**Recessed Downlight Luminaires in Ceilings.** Luminaires recessed into ceilings must meet all of the requirements for: insulation contact (IC) labeling; air leakage; sealing; maintenance; and socket and light source as described in § 150.0(k)1C.
§ 150.0(k)1D:	**Electronic Ballasts for Fluorescent Lamps.** Ballasts for fluorescent lamps rated 13 watts or greater must be electronic and must have an output frequency no less than 20 kHz.
§ 150.0(k)1E:	**Night Lights, Step Lights, and Path Lights.** Night lights, step lights and path lights are not required to comply with Table 150.0-A or be controlled by vacancy sensors provided they are rated to consume no more than 5 watts of power and emit no more than 150 lumens.
§ 150.0(k)1F:	**Lighting Integral to Exhaust Fans.** Lighting integral to exhaust fans (except when installed by the manufacturer in kitchen exhaust hoods) must meet the applicable requirements of § 150.0(k).`
§ 150.0(k)1G:	**Screw based luminaires.** Screw based luminaires must contain lamps that comply with Reference Joint Appendix JA8.`
§ 150.0(k)1H:	**Light Sources in Enclosed or Recessed Luminaires.** Lamps and other separable light sources that are not compliant with the JA8 elevated temperature requirements, including marking requirements, must not be installed in enclosed or recessed luminaires.
§ 150.0(k)1I:	**Light Sources in Drawers, Cabinets, and Linen Closets.** Light sources internal to drawers, cabinetry or linen closets are not required to comply with Table 150.0-A or be controlled by vacancy sensors provided that they are rated to consume no more than 5 watts of power, emit no more than 150 lumens, and are equipped with controls that automatically turn the lighting off when the drawer, cabinet or linen closet is closed.
§ 150.0(k)2A:	**Interior Switches and Controls.** All forward phase cut dimmers used with LED light sources must comply with NEMA SSL 7A.
§ 150.0(k)2B:	**Interior Switches and Controls.** Exhaust fans must be controlled separately from lighting systems.`
§ 150.0(k)2C:	**Interior Switches and Controls.** Lighting must have readily accessible wall-mounted controls that allow the lighting to be manually turned ON and OFF.`
§ 150.0(k)2D:	**Interior Switches and Controls.** Controls and equipment must be installed in accordance with manufacturer's instructions.
§ 150.0(k)2E:	**Interior Switches and Controls.** Controls must not bypass a dimmer, occupant sensor, or vacancy sensor function if the control is installed to comply with § 150.0(k).
§ 150.0(k)2F:	**Interior Switches and Controls.** Lighting controls must comply with the applicable requirements of § 110.9.

NRG SOLUTIONS
Micah Seierstad
155 Novato Dr.
Vacaville, CA 95688
(530)545-1138
NRGMicah@gmail.com
TheNRGSolutions.com

Title-24 Energy Compliance

Alex & DeeDee Oceguera
13115 Uvas Rd.
Morgan Hill, CA 95037

T.3

2/2/2021

COUNTY OF SANTA CLARA

2019 CALGREEN RESIDENTIAL CHECKLIST (MANDATORY+TIER 1)

County Amendments to CALGreen are in Italics.

- Designer to cross out items that are not applicable to the project.

- Installer or designer shall verify all applicable requirements have been satisfied and sign and date each row. County Inspectors will verify completion signatures and supporting documentation DURING CONSTRUCTION.

ITEM #	CALGreen CODE SECTION	REQUIREMENT	APPLICANT TO COMPLETE Plan Check Review Data: REFERENCE SHEET	Note or Detail No.	Installer or Designer Verification: Date	Installer or Designer Signature
PLANNING AND DESIGN: MANDATORY REQUIRMENTS						
1	4.106.2	A plan is developed and implemented to manage storm water drainage during construction.	CG-3	NOTE 1		
2	4.106.3	Construction plans indicates how site grading or a drainage system will manage all surface water flows to keep water from entering buildings.	CG-3	NOTE 2		
3	4.106.4.1	*For new dwellings and the **rebuild** of existing dwellings that include a panel upgrade or construction between panel and parking area,* a raceway to a dedicated 208/240-volt branch circuit meeting the requirements, is installed.	CG-3	NOTES 3 & 4		
PLANNING AND DESIGN: TIER 1 MANDATORY REQUIREMENTS						
4	A4.106.2.3	Displaced topsoil is stockpiled for reuse in a designated area and covered or protected from erosion.	CG-4	NOTE 7		
5	A4.106.4	Not less than 20 percent of the total parking, walking or patio surfaces are permeable.	CG-4	NOTE 9		
6	A4.106.8.1	For new dwellings with attached private garages, a dedicated 208/240-volt branch circuit including an overcurrent protective device is installed in the raceway, meeting the applicable requirements.	CG-4	NOTE 12		
PLANNING AND DESIGN: TIER 1 ELECTIVE REQUIREMENTS						
Comply with at least two Tier 1 elective measures - Cross out the rows not applicable						
7	A4.103.1	An infill site, greyfield site or EPA-recognized and Brownfield site is applicable.	CG-4	NOTE 1		
8	A4.103.2	Community connectivity is facilitated by one of the approved methods.	CG-4	NOTE 2		
9	A4.104.1	An individual with oversight responsibility for the project has participated in an educational program promoting environmentally friendly design or development and has provided instruction to appropriate entities.	CG-4	NOTE 3		
10	A4.105.2	Existing buildings are disassembled for reuse or recycling of building materials. The proposed structure utilizes at least one of the listed materials.	CG-4	NOTE 4		
11	A4.106.2.1	Soil analysis is performed by a licensed design professional and the findings are utilized in the structural design of the building.	CG-4	NOTE 5		
12	A4.106.2.2	Soil disturbance and erosion are minimized by using one or more of the methods listed	CG-4	NOTE 6		
13	A4.106.3	Landscape areas disrupted during construction are restored to be consistent with native vegetation and/or at least 75% native California or drought tolerant plant and tree are utilized.	CG-4	NOTE 8		
14	A4.106.6	A vegetated roof for at least 50% of the roof area is installed. Vegetated roof complies with CBC chapters 15 and 16.	CG-4	NOTE 10		
15	A4.106.7	Nonroof heat islands are reduced for 50% of sidewalks, patios, driveways, or other paved areas by using one or more of the methods listed.	CG-4	NOTE 11		
16	A4.106.10	Outdoor lighting systems are designed and installed to comply with one of the methods listed.	CG-4 CG-1	NOTE 13 TABLE A4.106.10		
ENERGY EFFICIENCY: MANDATORY REQUIRMENTS						
17	4.201.1	Building meets or exceeds the requirements of the California Building Energy Efficiency Standards.	T24 SHEETS			
WATER EFFICIENCY & CONSERVATION: MANDATORY REQUIREMENTS						
18	4.303.1	Plumbing Fixtures (water closets and urinals) and fittings (faucets and showerheads) installed in residential buildings comply with CALGreen Sections 4.303.1.1 through 4.303.1.4.4.	CG-3	NOTE 5		
19	4.303.2	Plumbing fixtures and fittings required in CALGreen Section 4.303.1 are installed in accordance with the CPC and meet the applicable referenced standards.	CG-3	Note 6		
20	4.304.1	Outdoor potable water use in landscape areas comply with a local water efficient landscape or the current California DWR MWELO, whichever is more stringent.	CG-3	Note 7		
21	4.305.1	For new dwellings where disinfected tertiary recycled water is available, installation of recycled water supply system is required per CPC chapter 15.	CG-3	Note 8		

ITEM #	CALGreen CODE SECTION	REQUIREMENT	APPLICANT TO COMPLETE Plan Check Review Data: REFERENCE SHEET	Note or Detail No.	Installer or Designer Verification: Date	Installer or Designer Signature
WATER EFFICIENCY & CONSERVATION : TIER 1 ELECTIVE REQUIREMENTS						
Comply with at least two Tier 1 elective measures - Cross out the rows not applicable						
22	A4.303.1	Kitchen faucet maximum flow rate does not exceed 1.5 gpm at 60 psi. See exceptions.	CG-4	NOTE 14		
23	A4.303.2	Alternate nonpotable water resources are used for indoor potable water reduction and are installed in accordance with CPC.	CG-4	NOTE 15		
24	A4.303.3	At least one qualified ENERGY STAR dishwasher or clothes washer is installed.	CG-4	NOTE 16		
25	A4.303.4	Nonwater urinals or composting toilets are installed.	CG-4	NOTE 17		
26	A4.303.5	Dwelling is equipped with a demand hot water recirculation system. The system is installed per CPC, CEnC, and the manufacturer's installation instructions.	CG-4	NOTE 18		
27	A4.304.1	An approved rainwater catchment system is designed and installed to use rainwater generated by at least 65% of the available roof area. The system is installed per CPC.	CG-4	NOTE 19		
28	A4.304.2	A water efficient landscape irrigation design that eliminates the use of potable water, is provided. Method used to accomplish the requirements comply with California Building Standards Code and one or more of listed methods.	CG-4	NOTE 20		
29	A4.304.3	Separate submeters or metering devices for outdoor potable water use is provided for landscape areas less than 5000 sq.ft.	CG-4	NOTE 21		
30	A4.305.1	Alternative plumbing piping is installed to permit the discharge from the clothes washer or other fixtures to be used for an irrigation system in compliance with CPC.	CG-4	NOTE 22		
31	A4.305.2	Dual water piping is installed for future use of recycled water at listed locations.	CG-4	NOTE 23		
32	A4.305.3	Recycled water is used for landscape irrigation.	CG-4	Note 24		
MATERIAL CONSERVATION & RESOURCE EFFICIENCY: MANDATORY REQUIREMENTS						
33	4.406.1	Annular spaces around pipes, electric cables, conduits or other openings in plates at exterior walls are protected against the passage of rodents by closing such openings with cement mortar, concrete masonry or similar method acceptable to the County of Santa Clara.	CG-3	Note 9		
34	4.408.1	Recycle and/or salvage for reuse a minimum of 65 percent of the nonhazardous construction and demolition waste. Submit either a Construction Waste management plan (CALGreen 4.408.2) or Utilize a waste management company (CALGreen 4.408.3).	CG-3	Note 10		
35	4.408.5	Documentation is provided to County of Santa Clara which demonstrates compliance with CALGreen sections 4.408.2 or 4.408.3.	CG-2 CG-3	Construction Waste Management Forms Note 11		
36	4.410.1	An operation and maintenance manual is placed in the building at the time of final inspection.	CG-3	Note 12		
MATERIAL CONSERVATION & RESOURCE EFFICIENCY: TIER 1 MANDATORY REQUIREMENTS						
37	A4.403.2	Reduction in cement use in foundation mix design is not less than 20 percent.	CG-4	Note 26		
38	A4.405.3.1	Use materials with a total RCV (recycled content value) not less than a 10-percent of the total material cost of the project except structural framing material.	CG-4	Note 33		
39	A4.408.1	Reduce construction waste by at least 65%. Documentation is submitted to the County of Santa Clara demonstrating compliance.	CG-2 CG-34	Construction Waste Management Forms Note 41		
MATERIAL CONSERVATION & RESOURCE EFFICIENCY: TIER 1 ELECTIVE REQUIREMENTS						
Comply with at least two Tier 1 elective measures - Cross out the rows not applicable						
40	A4.403.1	A Frost-Protected Shallow Foundation (FPSF) is utilized in compliance with CRC. The required manual includes instructions to the owner or occupant regarding the necessity for heating the structure per CRC R403.3.	CG-4	NOTE 25		
41	A4.404.1	Beams, headers and trimmers are sized and installed as specified in Chapter 23 of CBC or Chapter 6 of CRC.	CG-4	NOTE 27		
42	A4.404.2	Building dimensions and layouts are designed to minimize waste by one or more of the listed measures in at least 80% of the structure.	CG-4	NOTE 28		
43	A4.404.3	Premanufactured building system, as listed, is used to eliminate solid sawn lumber	CG-4	NOTE 29		
44	A4.404.4	Material lists are included in the plans which specify the material quantity and direction for on-site cuts, for the listed systems.	CG-4	NOTE 30		
45	A4.405.1	Prefinished building materials are utilized which do not require additional painting or staining. Acceptable material list is per CALGreen A4.405.1.	CG-4	NOTE 31		
46	A4.405.2	Concrete floors that do not require additional coverings are used.	CG-4	NOTE 32		
47	A4.405.4	One or more of the listed materials from rapidly renewable sources or agricultural byproducts are used.	CG-4	NOTE 34		
48	A4.407.1	Foundation and landscape drains with discharge to an approved on-site location is installed.	CG-4	NOTE 35		
49	A4.407.2	Roof gutter and downspout system is installed to route water at least 5 feet away from the foundation or connect to landscape drains with approved on-site discharge.	CG-4	NOTE 36		
50	A4.407.3	Flashing details complying with accepted industry standards or manufacturer's instructions are provided on the plans.	CG-4	NOTE 37		
51	A4.407.4	Building materials delivered to the construction site are protected from rain and other sources of moisture.	CG-4	NOTE 38		
52	A4.407.6	Exterior doors are covered to prevent water intrusion by one or more listed methods.	CG-4	NOTE 39		
53	A4.407.7	A permanent overhang or awning at least two feet in depth is provided at all exterior walls.	CG-4	Note 40		

ITEM #	CALGreen CODE SECTION	REQUIREMENT	APPLICANT TO COMPLETE Plan Check Review Data: REFERENCE SHEET	Note or Detail No.	Installer or Designer Verification: Date	Installer or Designer Signature
ENVIRONMENTAL QUALITY: MANDATORY REQUIREMENTS						
54	4.503.1	Any installed gas fireplace is a direct-vent sealed-combustion type. Any installed woodstove or pellet stove comply with US EPA Phase II emission limits where applicable.	CG-3	Note 13		
55	4.504.1	Duct openings and other related air distribution component openings are covered during construction until final startup of the HVAC equipment.	CG-3	Note 14		
56	4.504.2.1	Adhesives, sealants and caulks are compliant with VOC and other toxic compound limits.	CG-2 CG-2	Table 4.504.1 Table 4.504.2 Note 15		
57	4.504.2.2	Architectural paints and coatings are compliant with VOC limits.	CG-2 CG-3	Table 4.504.3 Note 16		
58	4.504.2.3	Aerosol paints and coatings are compliant with product weighted MIR limits for ROC and other toxic compounds.	CG-3	Note 17		
59	4.504.2.4	Documentation are provided to the County of Santa Clara to verify that compliant VOC limit finish materials have been used.	CG-3	Note 18		
60	4.504.3	Carpet and carpet systems meet the applicable testing and product requirements.	CG-2 CG-3	Table 4.504.1 Note 19		
61	4.504.5	Hardwood plywood, particleboard and medium density fiberboard composite wood meet formaldehyde limits.	CG-1 CG-3	Table 4.504.5 Note 21		
62	4.504.5.1	Documentation is provided to the County of Santa Clara to verify composite wood meets applicable formaldehyde limits.	CG-3	Note 22		
63	4.505.2	Vapor retarder and capillary break is installed at slab-on-grade foundations.	CG-3	Note 23		
64	4.505.3	Moisture content of building materials used in wall and floor framing do not exceed 19% prior to enclosure and is checked before enclosure. Insulation products are dry prior to enclosure.	CG-3	Note 24		
65	4.506.1	Each bathroom is mechanically ventilated and comply with applicable requirements.	CG-3	Note 25		
66	4.507.2	Heating and air-conditioning systems are sized, designed, and equipment is selected by using one of the methods listed.	CG-3	Note 26		
ENVIROMENTAL QUALITY: TIER 1 MANDATORY REQUIREMENTS						
67	A4.504.2	At least 90% of resilient flooring complies with applicable VOC limits.	CG-4	Note 43		
68	A4.504.3	Thermal insulation in the building is installed in compliance with applicable standards.	CG-4	Note 44		
ENVIROMENTAL QUALITY: TIER 1 ELECTIVE REQUIREMENTS						
Comply with at least one Tier 1 elective measures - Cross out the rows not applicable						
69	A4.504.1	Composite wood products made with NAF or ULEF resins are used.	CG-4	Note 42		
70	A4.506.2	Filters at MERV 8 or higher are used on return air openings, during construction.	CG-4	Note 45		
71	A4.506.3	Direct vent heating and cooling equipment are utilized where the equipment will be located in the conditioned space or the space heating and water heating equipment is installed in an isolated mechanical room.	CG-4	Note 46		
INSTALLER AND SPECIAL INSPECTOR QUALIFICATIONS: MANDATORY REQUIREMENTS						
72	702.1	HVAC system installers are trained and certified in the proper installation of HVAC systems.	CG-3	Note 27		
73	702.2	If required by County of Santa Clara, owner or owner's agent shall employ special inspector who are qualified and able to demonstrate competence in the discipline they are inspecting.	CG-3	Note 28		
74	703.1	Documentation used to show compliance with this code may include construction documents, plans, specifications, builder or installer certification, inspection reports, or other methods acceptable to County of Santa Clara which show substantial conformance.	CG-3	Note 29		

TABLE 4.504.5
FORMALDEHYDE LIMITS[1]
Maximum Formaldehyde Emissions in Parts per Million

PRODUCT	CURRENT LIMIT
Hardwood plywood veneer core	0.05
Hardwood plywood composite core	0.05
Particleboard	0.09
Medium density fiberboard	0.11
Thin medium density fiberboard[2]	0.13

1. Values in this table are derived from those specified by the California Air Resources Board, Air Toxics Control Measure for Composite Wood as tested in accordance with ASTM E1333. For additional information, see *California Code of Regulations*, Title 17, Sections 93120 through 93120.12.
2. Thin medium density fiberboard has a maximum thickness of $^{5}/_{16}$ inch (8 mm).

TABLE A4.106.10
MAXIMUM ALLOWABLE BACKLIGHT, UPLIGHT AND GLARE (BUG) RATINGS[1,2]

ALLOWABLE RATING	LIGHTING ZONE 1	LIGHTING ZONE 2	LIGHTING ZONE 3	LIGHTING ZONE 4
Maximum Allowable Backlight Rating[3]				
Luminaire greater than 2 mounting heights (MH) from property line	No Limit	No Limit	No Limit	No Limit
Luminaire back hemisphere is 1 – 2 MH from property line	B2	B3	B4	B4
Luminaire back hemisphere is 0.5 – 1 MH from property line	B1	B2	B3	B3
Luminaire back hemisphere is less than 0.5 MH from property line	B0	B0	B1	B2
Maximum Allowable Uplight Rating				
For area lighting[4]	U0	U0	U0	U0
For all other outdoor lighting, including decorative luminaires	U1	U2	U3	U4
Maximum Allowable Glare Rating[5]				
Luminaire greater than 2 MH from property line	G1	G2	G3	G4
Luminaire front hemisphere is 1 – 2 MH from property line	G0	G1	G1	G2
Luminaire front hemisphere is 0.5 – 1 MH from property line	G0	G0	G1	G1
Luminaire back hemisphere is less than 0.5 MH from property line	G0	G0	G0	G1

1. IESNA Lighting Zones 0 and 5 are not applicable; refer to Lighting Zones as defined in the *California Energy Code* and Chapter 10 of the *California Administrative Code*.
2. For property lines that abut public walkways, bikeways, plazas and parking lots, the property line may be considered to be 5 feet beyond the actual property line for purpose of determining compliance with this section. For property lines that abut public roadways and public transit corridors, the property line may be considered to be the centerline of the public roadway or public transit corridor for the purpose of determining compliance with this section.
3. If the nearest property line is less than or equal to two mounting heights from the back hemisphere of the luminaire distribution, the applicable reduced Backlight rating shall be met.
4. General lighting luminaires in areas such as outdoor parking, sales or storage lots shall meet these reduced ratings. Decorative luminaires located in these areas shall meet U-value limits for "all other outdoor lighting."
5. If the nearest property line is less than or equal to two mounting heights from the front hemisphere of the luminaire distribution, the applicable reduced Glare rating shall be met.

Oceguera Residence

13115 Uvas Rd.
Morgan Hill, CA

A.P.N. 756-19-017 and 756-19-021

CALGreen Project Mandatory and Tier1 Requirements
County of Santa Clara

CG-1

03/30/2020

TABLE 4.504.1
ADHESIVE VOC LIMIT[1, 2]
Less Water and Less Exempt Compounds in Grams per Liter

ARCHITECTURAL APPLICATIONS	VOC LIMIT
Indoor carpet adhesives	50
Carpet pad adhesives	50
Outdoor carpet adhesives	150
Wood flooring adhesive	100
Rubber floor adhesives	60
Subfloor adhesives	50
Ceramic tile adhesives	65
VCT and asphalt tile adhesives	50
Drywall and panel adhesives	50
Cove base adhesives	50
Multipurpose construction adhesives	70
Structural glazing adhesives	100
Single-ply roof membrane adhesives	250
Other adhesives not specifically listed	50
SPECIALTY APPLICATIONS	
PVC welding	510
CPVC welding	490
ABS welding	325
Plastic cement welding	250
Adhesive primer for plastic	550
Contact adhesive	80
Special purpose contact adhesive	250
Structural wood member adhesive	140
Top and trim adhesive	250
SUBSTRATE SPECIFIC APPLICATIONS	
Metal to metal	30
Plastic foams	50
Porous material (except wood)	50
Wood	30
Fiberglass	80

1. If an adhesive is used to bond dissimilar substrates together, the adhesive with the highest VOC content shall be allowed.
2. For additional information regarding methods to measure the VOC content specified in this table, see South Coast Air Quality Management District Rule 1168.

TABLE 4.504.2
SEALANT VOC LIMIT
Less Water and Less Exempt Compounds in Grams per Liter

SEALANTS	VOC LIMIT
Architectural	250
Marine deck	760
Nonmembrane roof	300
Roadway	250
Single-ply roof membrane	450
Other	420
SEALANT PRIMERS	
Architectural Nonporous Porous	 250 775
Modified bituminous	500
Marine deck	760
Other	750

TABLE 4.504.3
VOC CONTENT LIMITS FOR ARCHITECTURAL COATINGS[2, 3]
Grams of VOC per Liter of Coating,
Less Water and Less Exempt Compounds

COATING CATEGORY	VOC LIMIT
Flat coatings	50
Nonflat coatings	100
Nonflat-high gloss coatings	150
SPECIALTY COATINGS	
Aluminum roof coatings	400
Basement specialty coatings	400
Bituminous roof coatings	50
Bituminous roof primers	350
Bond breakers	350
Concrete curing compounds	350
Concrete/masonry sealers	100
Driveway sealers	50
Dry fog coatings	150
Faux finishing coatings	350
Fire resistive coatings	350
Floor coatings	100
Form-release compounds	250
Graphic arts coatings (sign paints)	500
High temperature coatings	420
Industrial maintenance coatings	250
Low solids coatings[1]	120
Magnesite cement coatings	450
Mastic texture coatings	100
Metallic pigmented coatings	500
Multicolor coatings	250
Pretreatment wash primers	420
Primers, sealers, and undercoaters	100
Reactive penetrating sealers	350
Recycled coatings	250
Roof coatings	50
Rust preventative coatings	250
Shellacs Clear Opaque	 730 550
Specialty primers, sealers and undercoaters	100
Stains	250
Stone consolidants	450
Swimming pool coatings	340
Traffic marking coatings	100
Tub and tile refinish coatings	420
Waterproofing membranes	250
Wood coatings	275
Wood preservatives	350
Zinc-rich primers	340

1. Grams of VOC per liter of coating, including water and including exempt compounds.
2. The specified limits remain in effect unless revised limits are listed in subsequent columns in the table.
3. Values in this table are derived from those specified by the California Air Resources Board, Architectural Coatings Suggested Control Measure, February 1, 2008. More information is available from the Air Resources Board.

Construction Waste Management (CWM) Plan

Fill out the form including diversion rate and facility names and addresses

Project Name: ____________________
Job #: ____________________
Project Manager: ____________________
Waste Hauling Company: ____________________
Contact Name: ____________________

Legend:
——— Hauling Company
═══ Sorting Facility Name and Location
≡≡≡ Disposal Service Company

All Subcontractors shall comply with the project's Construction Waste Management Plan.
All Subcontractor foremen shall sign the CWM Plan Acknowledgment Sheet.

Subcontractors who fail to comply with the Waste Management Plan will be subject to backcharges or withholding of payment, as deemed appropriate. For instance, Subcontractors who contaminate debris boxes that have been designated for a single material type will be subject to backcharge or withheld payment, as deemed appropriate.

1. The project's overall rate of waste diversion will be ____ %.
2. This project shall generate the least amount of waste possible by planning and ordering carefully, following all proper storage and handling procedures to reduce broken and damaged materials and reusing materials whenever possible. The majority of the waste that is generated on this jobsite will be diverted from the landfill and recycled for other use.
3. Spreadsheet 1, enclosed, identifies the waste materials that will be generated on this project, the diversion strategy for each waste type and the anticipated diversion rate.
4. Waste prevention and recycling activities will be discussed at the beginning of weekly subcontractor meetings. As each new subcontractor comes on-site, the WMP Coordinator will present him/her with a copy of the CWM Plan and provide a tour of the jobsite to identify materials to be salvaged and the procedures for handling jobsite debris. All Subcontractor foremen will acknowledge in writing that they have read and will abide by the CWM Plan. Subcontractor Acknowledgment Sheet enclosed. The CWM Plan will be posted at the jobsite trailer.
5. Salvage: Excess materials that cannot be used in the project, nor returned to the vendor, will be offered to site workers, the owner, or donated to charity if feasible.
6. ____________ will provide a commingled drop box at the jobsite for most of the construction waste. These commingled drop boxes will be taken to ____________. The average diversion rate for commingled waste will be ____%. As site conditions permit, additional drop boxes will be used for particular phases of construction (e.g., concrete and wood waste) to ensure the highest waste diversion rate possible.
7. In the event that the waste diversion rate achievable via the strategy described in (6) above, is projected to be lower than what is required, then a strategy of source-separated waste diversion and/or waste stream reduction will be implemented. Source separated waste refers to jobsite waste that is not commingled but is instead allocated to a debris box designated for a single material type, such as clean wood or metal.

   Notes:
   1. Waste stream reduction refers to efforts taken by the builder to reduce the amount of waste generated by the project to below four (4) pounds per square foot of building area.
   2. When using waste stream reduction measures, the gross weight of the product is subtracted from a base weight of four (4) pounds per square foot of building area. This reduction is considered additional diversion and can be used in the waste reduction percentage calculations.
8. ____________ will track and calculate the quantity (in tons) of all waste leaving the project and calculate the waste diversion rate for the project. ____________ will provide Project Manager with an updated monthly report on gross weight hauled and the waste diversion rate being achieved on the project. ____________ monthly report will track separately the gross weights and diversion rates for commingled debris and for each source-separated waste stream leaving the project. In the event that ____________ does not service any or all of the debris boxes on the project, the ____________ will work with the responsible parties to track the material type and weight (in tons) in such debris boxes in order to determine waste diversion rates for these materials.
9. In the event that Subcontractors furnish their own debris boxes as part of their scope of work, such Subcontractors shall not be excluded from complying with the CWM Plan and will provide ____________ weight and waste diversion data for their debris boxes.
10. In the event that site use constraints (such as limited space) restrict the number of debris boxes that can be used for collection of designated waste the project Superintendent will, as deemed appropriate, allocate specific areas onsite where individual material types are to be consolidated. These collection points are not to be contaminated with non-designated waste types.
11. Debris from jobsite office and meeting rooms will be collected by ____________ . ____________ ____________ will, at a minimum, recycle office paper, plastic, metal and cardboard.

Construction Waste Management (CWM) Worksheet

Project Name: ____________________

Job Number: ____________________

Project Manager: ____________________

Waste Hauling Company: ____________________

Construction Waste Management (CWM) Plan

WASTE MATERIAL TYPE	DIVERSION METHOD: COMMINGLED AND SORTED OFF SITE	DIVERSION METHOD: SOURCE SEPARATED ON SITE	PROJECTED DIVERSION RATE
Asphalt			
Concrete			
Shotcrete			
Metals			
Wood			
Rigid insulation			
Fiberglass insulation			
Acoustic ceiling tile			
Gypsum drywall			
Carpet/carpet pad			
Plastic pipe			
Plastic buckets			
Plastic			
Hardiplank siding and boards			
Glass			
Cardboard			
Pallets			
Job office trash, paper, glass & plastic bottles, cans, plastic			
Alkaline and rechargeable batteries, toner cartridges, and electronic devices			
Other:			
Other:			
Other:			
Other:			

Construction Waste Management (CWM) Acknowledgment

Note: This sample form may be used to assist in documenting compliance with the waste management plan.

Project Name: ____________________

Job Number: ____________________

Project Manager: ____________________

Waste Hauling Company: ____________________

CWM Plan Acknowledgment

The Foreman for each new Subcontractor that comes on site is to receive a copy of the Construction Waste Management Plan and complete this Acknowledgment Form.

I have read the Waste Management Plan for the project; I understand the goals of this plan and agree to follow the procedures described in this plan.

DATE	SUBCONTRACTOR COMPANY NAME	FOREMAN NAME	SIGNATURE

Table 1 - Recycled Content Value Calculations

A	B	C	D	E	F	G	H
Material/Assembly *	Manufacturer	Recycled Content Information Source	Material/ Assembly Cost ($)	Post-Consumer Recycled Content (%)	Pre-Consumer Recycled Content (%)	Recycled Content (%)	Recycled Content Value ($)
Total Recycled Content Value ($):							
For calculating the total material cost, choose ONLY ONE of the three options below:							
1.Size of project (sf):		Cost per sf:		x 45% = Total Material Cost ($):			
2.Estimated project cost/valuation ($):				x 45% = Total Material Cost ($):			
3.Sum of estimated and/or actual cost of materials used in the project				= Total Material Cost ($):			
Total Recycled Content Value as a percentage of the Total Material Cost:							

* Materials used as components of the structural frame shall not be used to calculate recycled content. The structural frame includes the load bearing structural elements, such as wall studs, plates, sills, columns, beams, girders, joists, rafters, and trusses.

The sum of post-consumer and pre-consumer recycled contents of each material cannot exceed 100%.

Table 2 - Assembly Product Recycled Content Calculations *

ASSEMBLY PRODUCT:

A	B	C	D	E	F	G	H	I
Assembly Product**	Material Weight (lb)	Material Weight (%)	Post-Consumer Recycled Content(lb)	Post-Consumer Recycled Content (%)	Pre-Consumer Recycled Content(lb)	Pre-Consumer Recycled Content (%)	Proportional Post-Consumer Content (%)	Proportional Pre-Consumer Content (%)
Total Weight:								
Assembly Post-Consumer Recycled Content:								
Assembly Pre-Consumer Recycled Content:								

* Use one sheet per assembly product.

** Materials used as components of the structural frame shall not be used to calculate recycled content. The structural frame includes the load bearing structural elements, such as wall studs, plates, sills, columns, beams, girders, joists, rafters, and trusses.

The sum of post-consumer and pre-consumer recycled contents of each material in the assembly product cannot exceed 100%.

Table 3 - Recycled Content Conversion Table (Pounds to %) *

A	B	C	D	E	F
Type of Material	Material Weight (lb)	Post-Consumer Recycled Content(lb)	Post-Consumer Recycled Content (%)	Pre- Consumer Recycled Content(lb)	Pre- Consumer Recycled Content (%)

* When the Post-Consumer and Pre-Consumer Recycled Content of any material are provided in pounds, Table 3 may be used for calculating the percentages of the recycled contents in each material. Table 3 shall not be used for assembly calculations.

Step 1 - Insert the type of material into Column A.

Step 2 - Insert the weight of material (provided by the manufacturer or other source) into Column B.

Step 3 - Insert the weight of Post-Consumer Recycled Content (provided by the manufacturer or other source) into Column C.

Step 4 - Insert the weight of Pre-Consumer Recycled Content (provided by the manufacturer or other source) into Column E.

Step 5 - Divide the values in Column C by the values in Column B; insert the Post-Consumer Recycled Content of each material in percentages into Column D.

Step 6 - Divide the values in Column E by the values in Column B; insert the Pre-Consumer Recycled Content of each material in percentages into Column F.

Step 7 - Transfer the percentages of Post-Consumer and Pre-Consumer Recycled Content from Column D and Column F to Table 1, Columns E and F.

RECYCLED CONTENT - DECLARATION STATEMENT

Project Name:	
Project Location:	
Project Manager:	
Project Owner:	

The following section shall be completed by a person with overall responsibility for the planning and design portion of the project.

DECLARATION STATEMENT:

- I certify under penalty of perjury, under the laws of the State of California, the information provided is true and correct.
- I certify that the materials, components, assembly products or manufactured devices identified on this certificate conform to all applicable codes and regulations, and the installation is consistent with the plans and specifications approved by the enforcing agency.

Responsible Person's Name:	Responsible Person's Signature:
Date Signed:	Position/Title:
Notes:	Attachments:

Oceguera Residence

13115 Uvas Rd.
Morgan Hill, CA
A.P.N. 756-19-017 and 756-19-021

CALGreen Project Mandatory and Tier1 Requirements
County of Santa Clara

CG-2

03/30/2020

CALGREEN 2019 NOTES – MANDATORY REQUIREMENTS:

1. PROJECTS WHICH DISTURB LESS THAN ONE ACRE OF SOIL AND ARE NOT PART OF A LARGER COMMON PLAN OF DEVELOPMENT WHICH IN TOTAL DISTURBS ONE ACRE OR MORE, SHALL MANAGE STORM WATER DRAINAGE DURING CONSTRUCTION. SEE CALGREEN 4.106.2 FOR FURTHER DETAILS.

2. CONSTRUCTION PLANS SHALL INDICATE HOW THE SITE GRADING OR DRAINAGE SYSTEM WILL MANAGE ALL SURFACE WATER FLOWS TO KEEP WATER FROM ENTERING BUILDINGS. SWALES, WATER COLLECTION AND DISPOSAL SYSTEMS, FRENCH DRAINS, WATER RETENTION GARDENS, AND OTHER MEASURES CAN BE USED. EXCEPTION: ADDITIONS AND ALTERATIONS NOT ALTERING THE DRAINAGE PATH.

3. NEW CONSTRUCTION SHALL COMPLY WITH CALGREEN SECTION 4.106.4.1 TO FACILITATE FUTURE INSTALLATION AND USE OF EV CHARGERS. ELECTRIC VEHICLE SUPPLY EQUIPMENT (EVSE) SHALL BE INSTALLED IN ACCORDANCE WITH THE CALIFORNIA ELECTRICAL CODE, ARTICLE 625.

EXCEPTIONS:

A. WHERE COUNTY OF SANTA CLARA HAS DETERMINED EV CHARGING AND INFRASTRUCTURE ARE NOT FEASIBLE.
B. ACCESSORY DWELLING UNITS (ADU) AND JUNIOR ACCESSORY DWELLING UNITS (JADU) WITHOUT ADDITIONAL PARKING FACILITIES.

4. FOR EACH DWELLING UNIT, INSTALL A LISTED RACEWAY TO ACCOMMODATE A DEDICATED 208/240-VOLT BRANCH CIRCUIT. THE RACEWAY SHALL NOT BE LESS THAN TRADE SIZE 1 (NOMINAL 1-INCH INSIDE DIAMETER). THE RACEWAY SHALL ORIGINATE AT THE MAIN SERVICE OR SUBPANEL AND SHALL TERMINATE INTO A LISTED CABINET, BOX OR OTHER ENCLOSURE IN CLOSE PROXIMITY TO THE PROPOSED LOCATION OF AN EV CHARGER. RACEWAYS ARE REQUIRED TO BE CONTINUOUS AT ENCLOSED, INACCESSIBLE OR CONCEALED AREAS AND SPACES. THE SERVICE PANEL AND/OR SUBPANEL SHALL PROVIDE CAPACITY TO INSTALL A 40-AMPERE MINIMUM DEDICATED BRANCH CIRCUIT AND SPACE(S) RESERVED TO PERMIT INSTALLATION OF A BRANCH CIRCUIT OVERCURRENT PROTECTIVE DEVICE. THE RACEWAY TERMINATION LOCATION SHALL BE PERMANENTLY AND VISIBLY MARKED AS "EV CAPABLE".

THE SERVICE PANEL OR SUB-PANEL CIRCUIT DIRECTORY SHALL IDENTIFY THE OVER CURRENT PROTECTIVE DEVICE SPACE(S) RESERVED FOR FUTURE EV CHARGING AS "EV CAPABLE". THE RACEWAY TERMINATION LOCATION SHALL BE PERMANENTLY AND VISIBLY MARKED AS "EV CAPABLE".

5. ALL NONCOMPLIANT PLUMBING FIXTURES SHALL BE REPLACED WITH WATER-CONSERVING PLUMBING FIXTURES. PLUMBING FIXTURE REPLACEMENT IS REQUIRED PRIOR TO ISSUANCE OF A CERTIFICATE OF FINAL COMPLETION, CERTIFICATE OF OCCUPANCY, OR FINAL PERMIT APPROVAL BY BUILDING AND INSPECTION DIVISION. SEE CIVIL CODE SECTION 1101.1, ET SEQ., FOR THE DEFINITION OF A NONCOMPLIANT PLUMBING FIXTURE, TYPES OF RESIDENTIAL BUILDINGS AFFECTED AND OTHER IMPORTANT ENACTMENT DATES.

A. THE EFFECTIVE FLUSH VOLUME OF ALL WATER CLOSETS SHALL NOT EXCEED 1.28 GALLONS PER FLUSH. TANK-TYPE WATER CLOSETS SHALL BE CERTIFIED TO THE PERFORMANCE CRITERIA OF THE U.S. EPA WATERSENSE SPECIFICATION FOR TANK-TYPE TOILETS.
B. SHOWERHEADS SHALL HAVE A MAXIMUM FLOW RATE OF NOT MORE THAN 1.8 GALLONS PER MINUTE AT 80 PSI. SHOWERHEADS SHALL BE CERTIFIED TO THE PERFORMANCE CRITERIA OF THE U.S. EPA WATERSENSE SPECIFICATION FOR SHOWERHEADS.
C. WHEN A SHOWER IS SERVED BY MORE THAN ONE SHOWERHEAD, THE COMBINED FLOW RATE OF ALL SHOWER-HEADS AND/OR OTHER SHOWER OUTLETS CONTROLLED BY A SINGLE VALVE SHALL NOT EXCEED 1.8 GALLONS PER MINUTE AT 80 PSI, OR THE SHOWER SHALL BE DESIGNED TO ALLOW ONLY ONE SHOWER OUTLET TO BE IN OPERATION AT A TIME. A HAND-HELD SHOWER SHALL BE CONSIDERED A SHOWERHEAD.
D. THE MAXIMUM FLOW RATE OF RESIDENTIAL LAVATORY FAUCETS SHALL NOT EXCEED 1.2 GALLONS PER MINUTE AT 60 PSI. THE MINIMUM FLOW RATE OF RESIDENTIAL LAVATORY FAUCETS SHALL NOT BE LESS THAN 0.8 GALLONS PER MINUTE AT 20 PSI.
E. THE MAXIMUM FLOW RATE OF KITCHEN FAUCETS SHALL NOT EXCEED 1.8 GALLONS PER MINUTE AT 60 PSI. KITCHEN FAUCETS MAY TEMPORARILY INCREASE THE FLOW ABOVE THE MAXIMUM RATE, BUT NOT TO EXCEED 2.2 GALLONS PER MINUTE AT 60 PSI, AND MUST DEFAULT TO A MAXIMUM FLOW RATE OF 1.8 GALLONS PER MINUTE AT 60 PSI.

6. PLUMBING FIXTURES AND FITTINGS SHALL BE INSTALLED IN ACCORDANCE WITH THE CALIFORNIA PLUMBING CODE, AND SHALL MEET THE APPLICABLE STANDARDS REFERENCED IN TABLE 1701.1 OF THE CALIFORNIA PLUMBING CODE.

7. RESIDENTIAL DEVELOPMENTS SHALL COMPLY WITH A LOCAL WATER EFFICIENT LANDSCAPE ORDINANCE OR THE CURRENT CALIFORNIA DEPARTMENT OF WATER RESOURCES' MODEL WATER EFFICIENT LANDSCAPE ORDINANCE (MWELO), WHICHEVER IS MORE STRINGENT.

8. NEWLY CONSTRUCTED RESIDENTIAL DEVELOPMENTS, WHERE DISINFECTED TERTIARY RECYCLED WATER IS AVAILABLE FROM A MUNICIPAL SOURCE TO A CONSTRUCTION SITE, MAY BE REQUIRED TO HAVE RECYCLED WATER SUPPLY SYSTEMS INSTALLED, ALLOWING THE USE OF RECYCLED WATER FOR RESIDENTIAL LANDSCAPE IRRIGATION SYSTEMS. SEE CHAPTER 15 OF THE CALIFORNIA PLUMBING CODE.

9. ANNULAR SPACES AROUND PIPES, ELECTRIC CABLES, CONDUITS OR OTHER OPENINGS IN SOLE/BOTTOM PLATES AT EXTERIOR WALLS SHALL BE PROTECTED AGAINST THE PASSAGE OF RODENTS BY CLOSING SUCH OPENINGS WITH CEMENT MORTAR, CONCRETE MASONRY OR A SIMILAR METHOD ACCEPTABLE TO THE COUNTY OF SANTA CLARA.

10. RECYCLE AND/OR SALVAGE FOR REUSE A MINIMUM OF 65 PERCENT OF THE NONHAZARDOUS CONSTRUCTION AND DEMOLITION WASTE IN ACCORDANCE WITH CALGREEN SECTION 4.408.2 OR 4.408.3.

A. A CONSTRUCTION WASTE MANAGEMENT PLAN IS PROVIDED. THE CONSTRUCTION WASTE MANAGEMENT PLAN SHALL BE UPDATED AS NECESSARY AND SHALL BE AVAILABLE DURING CONSTRUCTION FOR EXAMINATION BY THE COUNTY OF SANTA CLARA.
   1. IDENTIFY THE CONSTRUCTION AND DEMOLITION WASTE MATERIALS TO BE DIVERTED FROM DISPOSAL BY RECYCLING, REUSE ON THE PROJECT OR SALVAGE FOR FUTURE USE OR SALE.
   2. SPECIFY IF CONSTRUCTION AND DEMOLITION WASTE MATERIALS WILL BE SORTED ON-SITE (SOURCE-SEPARATED) OR BULK MIXED (SINGLE STREAM).
   3. IDENTIFY DIVERSION FACILITIES WHERE THE CONSTRUCTION AND DEMOLITION WASTE MATERIAL WILL BE TAKEN.
   4. IDENTIFY CONSTRUCTION METHODS EMPLOYED TO REDUCE THE AMOUNT OF CONSTRUCTION AND DEMOLITION WASTE GENERATED.
   5. Specify that the amount of construction and demolition waste materials diverted shall be calculated by weight or volume, but not by both.
B. A WASTE MANAGEMENT COMPANY CAN BE UTILIZED IF APPROVED BY THE COUNTY OF SANTA CLARA. SEE CALGREEN 4.408.3 FOR FURTHER .DETAILS

11. DOCUMENTATION SHALL BE PROVIDED TO THE COUNTY OF SANTA CLARA WHICH DEMONSTRATES COMPLIANCE WITH NOTE 10.

12. AT THE TIME OF FINAL INSPECTION, A MANUAL, COMPACT DISC, WEB-BASED REFERENCE OR OTHER MEDIA ACCEPTABLE TO THE COUNTY OF SANTA CLARA INCLUDES ALL OF THE REQUIRED INFORMATION, SHALL BE PLACED IN THE BUILDING. SEE CALGREEN 4.410.1 FOR DETAILS OF REQUIRED INFORMATION.

13. ANY INSTALLED GAS FIREPLACE SHALL BE A DIRECT-VENT SEALED-COMBUSTION TYPE. ANY INSTALLED WOODSTOVE OR PELLET STOVE SHALL COMPLY WITH U.S. EPA NEW SOURCE PERFORMANCE STANDARDS (NSPS) EMISSION LIMITS AS APPLICABLE, AND SHALL HAVE A PERMANENT LABEL INDICATING THEY ARE CERTIFIED TO MEET THE EMISSION LIMITS. WOODSTOVES, PELLET STOVES AND FIREPLACES SHALL ALSO COMPLY WITH APPLICABLE SANTA CLARA COUNTY ORDINANCES AND BAY AREA AIR QUALITY MANAGEMENT DISTRICT REGULATION 6, RULE 3.

14. AT THE TIME OF ROUGH INSTALLATION, DURING STORAGE ON THE CONSTRUCTION SITE AND UNTIL FINAL STARTUP OF THE HEATING, COOLING AND VENTILATING EQUIPMENT, ALL DUCT AND OTHER RELATED AIR DISTRIBUTION COMPONENT OPENINGS SHALL BE COVERED WITH TAPE, PLASTIC, SHEET METAL OR OTHER METHODS ACCEPTABLE TO THE COUNTY OF SANTA CLARA TO REDUCE THE AMOUNT OF WATER, DUST AND DEBRIS, WHICH MAY ENTER THE SYSTEM.

15. ADHESIVES, SEALANTS AND CAULKS USED ON THE PROJECT SHALL MEET THE REQUIREMENTS OF CALGREEN TABLES 4.504.1 OR 4.504.2 AS REPRODUCED ON SHEET CG-1. SUCH PRODUCTS ALSO SHALL COMPLY WITH THE RULE 1168 PROHIBITION ON THE USE OF CERTAIN TOXIC COMPOUNDS (CHLOROFORM, ETHYLENE DICHLORIDE, METHYLENE CHLORIDE, PERCHLOROETHYLENE AND TRICHLOROETHYLENE), EXCEPT FOR AEROSOL PRODUCTS, AS SPECIFIED BELOW.

AEROSOL ADHESIVES, AND SMALLER UNIT SIZES OF ADHESIVES, AND SEALANT OR CAULKING COMPOUNDS (IN UNITS OF PRODUCT, LESS PACKAGING, WHICH DO NOT WEIGH MORE THAN 1 POUND AND DO NOT CONSIST OF MORE THAN 16 FLUID OUNCES) SHALL COMPLY WITH STATEWIDE VOC STANDARDS AND OTHER REQUIREMENTS, INCLUDING PROHIBITIONS ON USE OF CERTAIN TOXIC COMPOUNDS, OF CALIFORNIA CODE OF REGULATIONS, TITLE 17, COMMENCING WITH SECTION 94507.

16. ARCHITECTURAL PAINTS AND COATINGS SHALL COMPLY WITH VOC LIMITS AS SHOWN IN TABLE 4.504.3 SHEET CG-1. THE VOC CONTENT LIMIT FOR COATINGS THAT DO NOT MEET THE DEFINITIONS FOR THE SPECIALTY COATINGS CATEGORIES LISTED IN TABLE 4.504.3 SHALL BE DETERMINED BY CLASSIFYING THE COATING AS A FLAT, NONFLAT OR NONFLAT-HIGH GLOSS COATING, BASED ON ITS GLOSS, AS DEFINED IN SUBSECTIONS 4.21, 4.36, AND 4.37 OF THE 2007 CALIFORNIA AIR RESOURCES BOARD, SUGGESTED CONTROL MEASURE, AND THE CORRESPONDING FLAT, NONFLAT OR NON-FLAT-HIGH GLOSS VOC LIMIT IN TABLE 4.504.3, SHEET CG-1 SHALL APPLY.

17. AEROSOL PAINTS AND COATINGS SHALL MEET THE PRODUCT-WEIGHTED MIR LIMITS FOR ROC IN SECTION 94522(A)(2) AND OTHER REQUIREMENTS, INCLUDING PROHIBITIONS ON USE OF CERTAIN TOXIC COMPOUNDS AND OZONE DEPLETING SUBSTANCES, IN SECTIONS 94522(E)(1) AND (F)(1) OF CALIFORNIA CODE OF REGULATIONS, TITLE 17, COMMENCING WITH SECTION 94520; AND IN AREAS UNDER THE JURISDICTION OF THE BAY AREA AIR QUALITY MANAGEMENT DISTRICT ADDITIONALLY COMPLY WITH THE PERCENT VOC BY WEIGHT OF PRODUCT LIMITS OF REGULATION 8, RULE 49.

18. VERIFICATION OF COMPLIANCE WITH NOTES 15, 16, AND 17 SHALL BE PROVIDED AT THE REQUEST OF THE COUNTY OF SANTA CLARA.

19. ALL CARPET INSTALLED IN THE BUILDING INTERIOR SHALL MEET THE TESTING AND PRODUCT REQUIREMENTS OF ONE OF THE FOLLOWING:

A. CARPET AND RUG INSTITUTE'S GREEN LABEL PLUS PROGRAM.
B. CALIFORNIA DEPARTMENT OF PUBLIC HEALTH, "STANDARD METHOD FOR THE TESTING AND EVALUATION OF VOLATILE ORGANIC CHEMICAL EMISSIONS FROM INDOOR SOURCES USING ENVIRONMENTAL CHAMBERS," VERSION 1.1, FEBRUARY 2010 (ALSO KNOWN AS SPECIFICATION 01350.)
C. NSF/ANSI 140 AT THE GOLD LEVEL.
D. SCIENTIFIC CERTIFICATIONS SYSTEMS INDOOR ADVANTAGE GOLD.

ALL CARPET CUSHION INSTALLED IN THE BUILDING INTERIOR SHALL MEET THE REQUIREMENTS OF THE CARPET AND RUG INSTITUTE'S GREEN LABEL PROGRAM. ALL CARPET ADHESIVE SHALL MEET THE REQUIREMENTS OF TABLE 4.504.1, SHEET CG-1.

20. WHERE RESILIENT FLOORING IS INSTALLED, AT LEAST 80 PERCENT OF FLOOR AREA RECEIVING RESILIENT FLOORING SHALL COMPLY WITH ONE OR MORE OF THE FOLLOWING:

A. PRODUCTS COMPLIANT WITH THE CALIFORNIA DEPARTMENT OF PUBLIC HEALTH, "STANDARD METHOD FOR THE TESTING AND EVALUATION OF VOLATILE ORGANIC CHEMICAL EMISSIONS FROM INDOOR SOURCES USING ENVIRONMENTAL CHAMBERS," VERSION 1.1, FEBRUARY 2010 (ALSO KNOWN AS SPECIFICATION 01350), CERTIFIED AS A CHPS LOW-EMITTING MATERIAL IN THE COLLABORATIVE FOR HIGH PERFORMANCE SCHOOLS (CHPS) HIGH PERFORMANCE PRODUCTS DATABASE.
B. PRODUCTS CERTIFIED UNDER UL GREENGUARD GOLD (FORMERLY THE GREENGUARD CHILDREN & SCHOOLS PROGRAM).
C. CERTIFICATION UNDER THE RESILIENT FLOOR COVERING INSTITUTE (RFCI) FLOORSCORE PROGRAM.
D. MEET THE CALIFORNIA DEPARTMENT OF PUBLIC HEALTH, "STANDARD METHOD FOR THE TESTING AND EVALUATION OF VOLATILE ORGANIC CHEMICAL EMISSIONS FROM INDOOR SOURCES USING ENVIRONMENTAL CHAMBERS," VERSION 1.1, FEBRUARY 2010 (ALSO KNOWN AS SPECIFICATION 01350).

21. HARDWOOD PLYWOOD, PARTICLEBOARD AND MEDIUM DENSITY FIBERBOARD COMPOSITE WOOD PRODUCTS USED ON THE INTERIOR OR EXTERIOR OF THE BUILDING SHALL MEET THE REQUIREMENTS FOR FORMALDEHYDE AS SPECIFIED IN TABLE 4.504.5 SHEET CG-1.

22. VERIFICATION OF COMPLIANCE WITH NOTE 21 SHALL BE PROVIDED AT THE REQUEST OF THE COUNTY OF SANTA CLARA.

23. CONCRETE SLAB FOUNDATIONS REQUIRED TO HAVE A VAPOR RETARDER BY CBC, CHAPTER 19 OR CONCRETE SLAB-ON-GROUND FLOORS REQUIRED TO HAVE A VAPOR RETARDER BY CRC CHAPTER 5, SHALL COMPLY WITH FOLLOWING REQUIREMENT:

A CAPILLARY BREAK SHALL BE INSTALLED IN COMPLIANCE WITH AT LEAST ONE OF THE FOLLOWING:

A. A 4-INCH-THICK BASE OF 1/2 INCH OR LARGER CLEAN AGGREGATE SHALL BE PROVIDED WITH A VAPOR RETARDER IN DIRECT CONTACT WITH CONCRETE AND A CONCRETE MIX DESIGN, WHICH WILL ADDRESS BLEEDING, SHRINKAGE, AND CURLING, SHALL BE USED.
B. A SLAB DESIGN SPECIFIED BY THE LICENSED DESIGN PROFESSIONAL.

24. BUILDING MATERIALS WITH VISIBLE SIGNS OF WATER DAMAGE SHALL NOT BE INSTALLED. WALL AND FLOOR FRAMING SHALL NOT BE ENCLOSED WHEN THE FRAMING MEMBERS EXCEED 19 PERCENT MOISTURE CONTENT. INSULATION PRODUCTS WHICH ARE VISIBLY WET OR HAVE A HIGH MOISTURE CONTENT SHALL BE REPLACED OR ALLOWED TO DRY PRIOR TO ENCLOSURE IN WALL OR FLOOR CAVITIES. WET-APPLIED INSULATION PRODUCTS SHALL FOLLOW THE MANUFACTURERS' DRYING RECOMMENDATIONS PRIOR TO ENCLOSURE.

25. EACH BATHROOM SHALL BE MECHANICALLY VENTILATED AND SHALL COMPLY WITH THE FOLLOWING:

A. FANS SHALL BE ENERGY STAR COMPLIANT AND BE DUCTED TO TERMINATE OUTSIDE THE BUILDING.
B. UNLESS FUNCTIONING AS A COMPONENT OF A WHOLE HOUSE VENTILATION SYSTEM, FANS MUST BE CONTROLLED BY A HUMIDITY CONTROL.
   1. HUMIDITY CONTROLS SHALL BE CAPABLE OF ADJUSTMENT BETWEEN A RELATIVE HUMIDITY RANGE OF ≤ 50 PERCENT TO A MAXIMUM OF 80 PERCENT. A HUMIDITY CONTROL MAY UTILIZE MANUAL OR AUTOMATIC MEANS OF ADJUSTMENT.
   2. A HUMIDITY CONTROL MAY BE A SEPARATE COMPONENT TO THE EXHAUST FAN AND IS NOT REQUIRED TO BE INTEGRAL.

26. HEATING AND AIR-CONDITIONING SYSTEMS SHALL BE SIZED, DESIGNED AND HAVE THEIR EQUIPMENT SELECTED USING THE FOLLOWING METHODS:

A. THE HEAT LOSS AND HEAT GAIN IS ESTABLISHED ACCORDING TO ANSI/ACCA 2 MANUAL J—2016 (RESIDENTIAL LOAD CALCULATION), ASHRAE HANDBOOKS OR OTHER EQUIVALENT DESIGN SOFTWARE OR METHODS.
B. DUCT SYSTEMS ARE SIZED ACCORDING TO ANSI/ACCA 1 MANUAL D—2016 (RESIDENTIAL DUCT SYSTEMS), ASHRAE HANDBOOKS OR OTHER EQUIVALENT DESIGN SOFTWARE OR METHODS.
C. SELECT HEATING AND COOLING EQUIPMENT ACCORDING TO ANSI/ACCA 3 MANUAL S—2014 (RESIDENTIAL EQUIPMENT SELECTION) OR OTHER EQUIVALENT DESIGN SOFTWARE OR METHODS.

27. HVAC SYSTEM INSTALLERS SHALL BE TRAINED AND CERTIFIED IN THE PROPER INSTALLATION OF HVAC SYSTEMS INCLUDING DUCTS AND EQUIPMENT BY A NATIONALLY OR REGIONALLY RECOGNIZED TRAINING OR CERTIFICATION PROGRAM. UNCERTIFIED PERSONS MAY PERFORM HVAC INSTALLATIONS WHEN UNDER THE DIRECT SUPERVISION AND RESPONSIBILITY OF A PERSON TRAINED AND CERTIFIED TO INSTALL HVAC SYSTEMS OR CONTRACTOR LICENSED TO INSTALL HVAC SYSTEMS.

28. IF REQUIRED BY THE COUNTY OF SANTA CLARA, THE OWNER OR THE RESPONSIBLE ENTITY ACTING AS THE OWNER'S AGENT SHALL EMPLOY ONE OR MORE SPECIAL INSPECTORS TO PROVIDE INSPECTION OR OTHER DUTIES NECESSARY TO SUBSTANTIATE COMPLIANCE WITH THIS CODE. SPECIAL INSPECTORS SHALL DEMONSTRATE COMPETENCE TO THE SATISFACTION OF THE COUNTY OF SANTA CLARA FOR THE PARTICULAR TYPE OF INSPECTION OR TASK TO BE PERFORMED. SPECIAL INSPECTORS SHALL BE INDEPENDENT ENTITIES WITH NO FINANCIAL INTEREST IN THE MATERIALS OR THE PROJECT THEY ARE INSPECTING FOR COMPLIANCE WITH THIS CODE.

29. DOCUMENTATION USED TO SHOW COMPLIANCE WITH THIS CODE SHALL INCLUDE BUT IS NOT LIMITED TO, CONSTRUCTION DOCUMENTS, PLANS, SPECIFICATIONS, BUILDER OR INSTALLER CERTIFICATION, INSPECTION REPORTS, OR OTHER METHODS ACCEPTABLE TO THE COUNTY OF SANTA CLARA WHICH DEMONSTRATE SUBSTANTIAL CONFORMANCE. WHEN SPECIFIC DOCUMENTATION OR SPECIAL INSPECTION IS NECESSARY TO VERIFY COMPLIANCE, THAT METHOD OF COMPLIANCE WILL BE SPECIFIED IN THE APPROPRIATE SECTION OR IDENTIFIED IN THE APPLICATION CHECKLIST.

Oceguera Residence
13115 Uvas Rd.
Morgan Hill, CA
A.P.N. 756-19-017 and 756-19-021

CALGREEN 2019 NOTES – TIER 1 REQUIREMENTS:

1. SITE WHICH COMPLIES WITH AT LEAST ONE OF THE FOLLOWING CHARACTERISTICS SHALL BE SELECTED:

A. AN INFILL SITE.
B. A GREYFIELD SITE.
C. AN EPA-RECOGNIZED AND REMEDIATED BROWNFIELD SITE.

2. FACILITATE COMMUNITY CONNECTIVITY BY ONE OF THE FOLLOWING METHODS:

A. LOCATE PROJECT WITHIN A ¼ MILE TRUE WALKING DISTANCE OF AT LEAST FOUR BASIC SERVICES, READILY ACCESSIBLE BY PEDESTRIANS.
B. LOCATE PROJECT WITHIN A ½ MILE TRUE WALKING DISTANCE OF AT LEAST SEVEN BASIC SERVICES, READILY ACCESSIBLE BY PEDESTRIANS.
C. OTHER METHODS INCREASING ACCESS TO ADDITIONAL RESOURCES.

EXAMPLES OF SERVICES INCLUDE, BUT ARE NOT LIMITED TO, BANK, PLACE OF WORSHIP, CONVENIENCE GROCERY, DAY CARE, CLEANERS, FIRE STATION, BARBER SHOP, BEAUTY SHOP, HARDWARE STORE, LAUNDRY, LIBRARY, MEDICAL CLINIC, DENTAL CLINIC, SENIOR CARE FACILITY, PARK, PHARMACY, POST OFFICE, RESTAURANT, SCHOOL, SUPERMARKET, THEATER, COMMUNITY CENTER, FITNESS CENTER, MUSEUM OR FARMERS MARKET.

3. INDIVIDUALS WITH OVERSIGHT AUTHORITY ON THE PROJECT WHO HAVE BEEN TRAINED IN AREAS RELATED TO ENVIRONMENTALLY FRIENDLY DEVELOPMENT SHALL TEACH GREEN CONCEPTS TO OTHER MEMBERS OF THE DEVELOPMENT STAFF AND ENSURE THAT TRAINING IS PROVIDED TO ALL PARTIES ASSOCIATED WITH THE DEVELOPMENT OF THE PROJECT.

PRIOR TO BEGINNING THE CONSTRUCTION ACTIVITIES, ALL PARTIES INVOLVED WITH THE DEVELOPMENT PROCESS SHALL RECEIVE A WRITTEN GUIDELINE AND INSTRUCTION SPECIFYING THE GREEN GOALS OF THE PROJECT.

4. THE SALVAGED MATERIALS FROM DECONSTRUCTION OF EXISTING BUILDINGS ON THE SITE SHALL BE REUSED. REUSED MATERIALS OR PRODUCTS MUST COMPLY WITH CURRENT BUILDING STANDARDS REQUIREMENTS OR BE AN ACCEPTED ALTERNATE METHOD OR MATERIAL.

MATERIALS WHICH CAN BE EASILY REUSED INCLUDE BUT ARE NOT LIMITED TO THE FOLLOWING:

A. LIGHT FIXTURES.
B. PLUMBING FIXTURES.
C. DOORS AND TRIM.
D. MASONRY.
E. ELECTRICAL DEVICES.
F. APPLIANCES.
G. FOUNDATIONS OR PORTIONS OF FOUNDATIONS.

REUSED MATERIAL MUST BE IN COMPLIANCE WITH THE APPROPRIATE TITLE 24 REQUIREMENTS.

5. BUILDING SITE SOIL ANALYSIS SHALL BE PERFORMED BY A LICENSED DESIGN PROFESSIONAL AND THE FINDINGS SHALL BE UTILIZED IN THE STRUCTURAL DESIGN OF THE BUILDING.

6. THE EFFECT OF DEVELOPMENT ON BUILDING SITES SHALL BE EVALUATED AND THE SOIL SHALL BE PROTECTED BY ONE OR MORE OF THE FOLLOWING:

A. NATURAL DRAINAGE PATTERNS SHALL BE EVALUATED AND EROSION CONTROLS SHALL BE IMPLEMENTED TO MINIMIZE EROSION DURING CONSTRUCTION AND AFTER OCCUPANCY.
B. SITE ACCESS SHALL BE ACCOMPLISHED BY MINIMIZING THE AMOUNT OF CUT AND FILL NEEDED TO INSTALL ACCESS ROADS AND DRIVEWAYS.
C. AS ALLOWED BY OTHER PARTS OF THE CALIFORNIA BUILDING STANDARDS CODE, UNDERGROUND CONSTRUCTION ACTIVITIES SHALL BE COORDINATED TO UTILIZE THE SAME TRENCH, MINIMIZE THE AMOUNT OF TIME THE DISTURBED SOIL IS EXPOSED AND THE SOIL SHALL BE REPLACED USING ACCEPTED COMPACTION METHODS.

7. TOPSOIL SHALL BE PROTECTED OR SAVED FOR REUSE. DISPLACED TOPSOIL SHALL BE STOCKPILED FOR REUSE IN A DESIGNATED AREA AND COVERED OR PROTECTED FROM EROSION. PROTECTION FROM EROSION INCLUDES COVERING WITH TARPS, STRAW, MULCH, CHIPPED WOOD, VEGETATIVE COVER, OR OTHER MEANS ACCEPTABLE TO THE COUNTY OF SANTA CLARA TO PROTECT THE TOPSOIL FOR LATER USE.

8. POSTCONSTRUCTION LANDSCAPE DESIGNS SHALL ACCOMPLISH ONE OR MORE OF THE FOLLOWING:

A. AREAS DISRUPTED DURING CONSTRUCTION SHALL BE RESTORED TO BE CONSISTENT WITH NATIVE VEGETATION SPECIES AND PATTERNS.
B. UTILIZE AT LEAST 75 PERCENT NATIVE CALIFORNIA OR DROUGHT TOLERANT PLANT AND TREE SPECIES APPROPRIATE FOR THE CLIMATE ZONE REGION.

9. PERMEABLE PAVING SHALL BE UTILIZED FOR NOT LESS THAN 20 PERCENT OF THE TOTAL PARKING, WALKING OR PATIO SURFACES

THE PRIMARY DRIVEWAY, PRIMARY ENTRY WALKWAY AND ENTRY PORCH OR LANDING SHALL NOT BE INCLUDED WHEN CALCULATING THE AREA REQUIRED TO BE A PERMEABLE SURFACE.

10. INSTALL A VEGETATED ROOF FOR AT LEAST 50 PERCENT OF THE ROOF AREA. VEGETATED ROOFS SHALL COMPLY WITH REQUIREMENTS FOR ROOF GARDENS AND LANDSCAPED ROOFS IN THE CALIFORNIA BUILDING CODE, CHAPTER 15 AND CHAPTER 16.

11. REDUCE NONROOF HEAT ISLANDS FOR 50 PERCENT OF SIDEWALKS, PATIOS, DRIVEWAYS OR OTHER PAVED AREAS BY USING ONE OR MORE OF THE METHODS LISTED.

A. TREES OR OTHER PLANTINGS TO PROVIDE SHADE AND THAT MATURE WITHIN 15 YEARS OF PLANTING. TREES SHOULD BE NATIVE OR ADAPTIVE TO THE REGION AND CLIMATE ZONES AND NONINVASIVE; HARDY AND RESISTANT TO DROUGHT, INSECTS AND DISEASE; EASY TO MAINTAIN (NO FREQUENT SHEDDING OF TWIGS, BRANCHES, UNWANTED FRUIT OR SEED PODS); AND SUITABLE IN MATURE SIZE AND ENVIRONMENTAL REQUIREMENTS FOR THE SITE. TREE SELECTION AND PLACEMENT SHOULD CONSIDER LOCATION AND SIZE OF AREAS TO BE SHADED, LOCATION OF UTILITIES, VIEWS FROM THE STRUCTURE, DISTANCE TO SIDEWALKS AND FOUNDATIONS, OVERHANGS ONTO ADJACENT PROPERTIES AND STREETS; OTHER INFRASTRUCTURE AND ADJACENT TO LANDSCAPING. IN ADDITION, SHADING SHALL NOT CAST A SHADOW, AS SPECIFIED, ON ANY NEIGHBORING SOLAR COLLECTORS PURSUANT TO PUBLIC RESOURCES CODE SECTION 25981, ET SEQ. (SOLAR SHADE CONTROL ACT).
B. USE HIGH ALBEDO MATERIALS WITH AN INITIAL SOLAR REFLECTANCE VALUE OF AT LEAST 0.30 AS DETERMINED IN ACCORDANCE ASTM E1918 OR C1549.
C. USE OPEN GRID PAVEMENT SYSTEM OR PERVIOUS OR PERMEABLE PAVEMENT SYSTEM.
D. LOCATE 50 PERCENT OF PARKING UNDERGROUND OR USE MULTILEVEL PARKING.
E. OTHER METHODS OF REDUCING HEAT ISLAND EFFECTS ACCEPTABLE TO THE COUNTY OF SANTA CLARA.

12. FOR EACH DWELLING UNIT, INSTALL A DEDICATED 208/240-VOLT BRANCH CIRCUIT IN THE RACEWAY REQUIRED BY CALGREEN SECTION 4.106.4.1 (SEE SHEET GB-2 NOTE 4). THE BRANCH CIRCUIT AND ASSOCIATED OVERCURRENT PROTECTIVE DEVICE SHALL BE RATED AT 40 AMPERES MINIMUM. OTHER ELECTRICAL COM-PONENTS, INCLUDING A RECEPTACLE OR BLANK COVER, RELATED TO THIS SECTION SHALL BE INSTALLED IN ACCORDANCE WITH THE CALIFORNIA ELECTRICAL CODE.

THE SERVICE PANEL OR SUB-PANEL CIRCUIT DIRECTORY SHALL IDENTIFY THE OVERCURRENT PROTECTIVE DEVICE DESIGNATED FOR FUTURE EV CHARGING PURPOSES AS "EV READY" IN ACCORDANCE WITH THE CALIFORNIA ELECTRICAL CODE. THE RECEPTACLE OR BLANK COVER SHALL BE IDENTIFIED AS "EV READY."

13. OUTDOOR LIGHTING SYSTEMS SHALL BE DESIGNED AND INSTALLED TO COMPLY WITH THE FOLLOWING:

A. THE MINIMUM REQUIREMENTS IN THE CALIFORNIA ENERGY CODE FOR LIGHTING ZONES 1-4 AS DEFINED IN CHAPTER 10 OF THE CALIFORNIA ADMINISTRATIVE CODE; AND
B. BACKLIGHT, UPLIGHT AND GLARE (BUG) RATINGS AS DEFINED IN IES TM-15-11; AND
C. ALLOWABLE BUG RATINGS NOT EXCEEDING THOSE SHOWN IN CALGREEN TABLE A4.106.10

EXCEPTIONS:

1. LUMINAIRES THAT QUALIFY AS EXCEPTIONS IN THE CALIFORNIA ENERGY CODE.
2. EMERGENCY LIGHTING.
3. ONE- AND TWO-FAMILY DWELLINGS.

14. THE MAXIMUM FLOW RATE OF KITCHEN FAUCETS SHALL NOT EXCEED 1.5 GALLONS PER MINUTE AT 60 PSI. KITCHEN FAUCETS MAY TEMPORARILY INCREASE THE FLOW ABOVE THE MAXIMUM RATE, BUT NOT TO EXCEED 2.2 GALLONS PER MINUTE AT 60 PSI, AND MUST DEFAULT TO A MAXIMUM FLOW RATE OF 1.5 GAL-LONS PER MINUTE AT 60 PSI. WHERE COMPLYING FAUCETS ARE UNAVAILABLE, AERATORS OR OTHER MEANS MAY BE USED TO ACHIEVE REDUCTION.

15. ALTERNATE NONPOTABLE WATER SOURCES SHALL BE USED FOR INDOOR POTABLE WATER REDUCTION. ALTERNATE NONPOTABLE WATER SOURCES SHALL BE INSTALLED IN ACCORDANCE WITH THE CALIFORNIA PLUMBING Code.

16. INSTALL AT LEAST ONE QUALIFIED ENERGY STAR DISHWASHER OR CLOTHES WASHER.

17. NONWATER URINALS OR COMPOSTING TOILETS SHALL BE INSTALLED. WHERE APPROVED, HYBRID URINALS, AS DEFINED IN CALGREEN CHAPTER 2, SHALL BE CONSIDERED NONWATER URINALS.

18. ONE- AND TWO-FAMILY DWELLINGS SHALL BE EQUIPPED WITH A DEMAND HOT WATER RECIRCULATION SYSTEM, AS DEFINED IN CALGREEN CHAPTER 2. THE DEMAND HOT WATER RECIRCULATION SYSTEM SHALL BE INSTALLED IN ACCORDANCE WITH THE CALIFORNIA PLUMBING CODE, CALIFORNIA ENERGY CODE, AND THE MANUFACTURER'S INSTALLATION INSTRUCTIONS.

19. AN APPROVED RAINWATER CATCHMENT SYSTEM SHALL BE DESIGNED AND INSTALLED TO USE RAINWATER GENERATED BY AT LEAST 65 PERCENT OF THE AVAILABLE ROOF AREA. RAINWATER CATCHMENT SYSTEMS SHALL BE DESIGNED AND INSTALLED IN ACCORDANCE WITH THE CALIFORNIA PLUMBING CODE.

20. WHEN LANDSCAPING IS PROVIDED AND AS ALLOWED BY LOCAL ORDINANCE, A WATER EFFICIENT LANDSCAPE IRRIGATION DESIGN THAT ELIMINATES THE USE OF POTABLE WATER BEYOND THE INITIAL REQUIREMENTS FOR PLANT INSTALLATION AND ESTABLISHMENT SHALL BE PROVIDED. METHODS USED TO ACCOM-PLISH THE REQUIREMENTS OF THIS SECTION SHALL COMPLY WITH THE REQUIREMENTS OF THE CALIFORNIA BUILDING STANDARDS CODE AND SHALL INCLUDE, BUT NOT BE LIMITED TO, THE FOLLOWING:

A. USE OF CAPTURED RAINWATER.
B. USE OF RECYCLED WATER.
C. WATER TREATED FOR IRRIGATION PURPOSES AND CONVEYED BY A WATER DISTRICT OR PUBLIC ENTITY.
D. USE OF GRAYWATER.
E. USE OF DROUGHT TOLERANT PLANTS.

21. FOR NEW WATER SERVICE CONNECTIONS, LANDSCAPED IRRIGATED AREAS LESS THAN 5,000 SQUARE FEET SHALL BE PROVIDED WITH SEPARATE SUBMETERS OR METERING DEVICES FOR OUTDOOR POTABLE WATER USE.

22. ALTERNATIVE PLUMBING PIPING SHALL BE INSTALLED TO PERMIT THE DISCHARGE FROM THE CLOTHES WASHER OR OTHER FIXTURES TO BE USED FOR AN IRRIGATION SYSTEM IN COMPLIANCE WITH THE CALIFORNIA PLUMBING CODE.

23. BASED ON PROJECTED AVAILABILITY, DUAL WATER PIPING SHALL BE INSTALLED FOR FUTURE USE OF RECYCLED WATER AT THE FOLLOWING LOCATIONS:

A. INTERIOR PIPING FOR THE USE OF RECYCLED WATER SHALL BE INSTALLED TO SERVE ALL WATER CLOSETS, URINALS AND FLOOR DRAINS.
B. EXTERIOR PIPING IS INSTALLED TO TRANSPORT RECYCLED WATER FROM THE POINT OF CONNECTION TO THE STRUCTURE. RECYCLED WATER SYSTEMS SHALL BE DESIGNED AND INSTALLED IN ACCORDANCE WITH THE CALIFORNIA PLUMBING CODE.

24. RECYCLED WATER SHALL BE USED FOR LANDSCAPE IRRIGATION.

25. AS ALLOWED BY LOCAL CONDITIONS, UTILIZE A FROST-PROTECTED SHALLOW FOUNDATION (FPSF) IN COMPLIANCE WITH THE CALIFORNIA RESIDENTIAL CODE (CRC). WHEN AN FPSF FOUNDATION SYSTEM IS INSTALLED, THE MANUAL REQUIRED BY CALGREEN SECTION 4.410.1 SHALL INCLUDE INSTRUCTIONS TO THE OWNER OR OCCUPANT REGARDING THE NECESSITY FOR HEATING THE STRUCTURE AS REQUIRED IN SECTION R403.3 OF THE CALIFORNIA RESIDENTIAL CODE.

26. AS ALLOWED BY THE COUNTY OF SANTA CLARA, CEMENT USED IN FOUNDATION MIX DESIGN SHALL BE REDUCED NOT LESS THAN 20 PERCENT. RODUCTS COMMONLY USED TO REPLACE CEMENT IN CONCRETE MIX DESIGNS INCLUDE, BUT ARE NOT LIMITED TO:

A. FLY ASH.
B. SLAG.
C. SILICA FUME.
D. RICE HULL ASH.

27. BEAMS, HEADERS AND TRIMMERS SHALL BE SIZED AND INSTALLED AS SPECIFIED IN CHAPTER 23 OF THE CALIFORNIA BUILDING CODE, OR CHAPTER 6 OF THE CALIFORNIA RESIDENTIAL CODE, AS APPLICABLE. OTHER CALCULATIONS ACCEPTABLE TO THE COUNTY OF SANTA CLARA WHICH USE THE MINIMUM SIZE MEMBER FOR THE TRIBUTARY LOAD IS ACCEPTABLE.

28. BUILDING DIMENSIONS AND LAYOUTS SHALL BE DESIGNED TO MINIMIZE WASTE BY ONE OR MORE OF THE FOLLOWING MEASURES IN AT LEAST 80 PERCENT OF THE STRUCTURE:

A. BUILDING DESIGN DIMENSIONS IN 2-FOOT INCREMENTS ARE USED.
B. WINDOWS AND DOORS ARE LOCATED AT REGULAR 16" OR 24" STUD POSITIONS.
C. OTHER METHODS ACCEPTABLE TO THE COUNTY OF SANTA CLARA.

29. PREMANUFACTURED BUILDING SYSTEMS SHALL BE USED TO ELIMINATE SOLID SAWN LUMBER WHENEVER POSSIBLE. ONE OR MORE OF THE FOLLOWING PREMANUFACTURED BUILDING SYSTEMS IS USED:

A. COMPOSITE FLOOR JOIST OR PREMANUFACTURED FLOOR FRAMING SYSTEM.
B. COMPOSITE ROOF RAFTERS OR PREMANUFACTURED ROOF FRAMING SYSTEM.
C. PANELIZED (SIPS, ICF OR SIMILAR) FRAMING SYSTEMS.
D. OTHER METHODS APPROVED BY THE COUNTY OF SANTA CLARA.

30. MATERIAL LISTS SHALL BE INCLUDED IN THE PLANS WHICH SPECIFY THE MATERIAL QUANTITY AND PROVIDE DIRECTION FOR ON-SITE CUTS TO BE MADE FROM THE MATERIAL PROVIDED. MATERIAL LISTS AND DIRECTION SHALL BE PROVIDED FOR THE FOLLOWING SYSTEMS:

A. FLOOR FRAMING.
B. WALL FRAMING.
C. CEILING AND ROOF FRAMING.
D. STRUCTURAL PANELS AND ROOF SHEATHING.

31. UTILIZE PREFINISHED BUILDING MATERIALS WHICH DO NOT REQUIRE ADDITIONAL PAINTING OR STAINING WHEN POSSIBLE. ONE OR MORE OF THE FOLLOWING BUILDING MATERIALS THAT DO NOT REQUIRE ADDITIONAL RESOURCES FOR FINISHING ARE USED:

A. EXTERIOR TRIM NOT REQUIRING PAINT OR STAIN.
B. WINDOWS NOT REQUIRING PAINT OR STAIN.
C. SIDING OR EXTERIOR WALL COVERINGS WHICH DO NOT REQUIRE PAINT OR STAIN.

32. CONCRETE FLOORS THAT DO NOT REQUIRE ADDITIONAL COVERINGS SHALL BE USED INCLUDING BUT NOT LIMITED TO STAINED, NATURAL OR STAMPED CONCRETE FLOORS.

33. USE MATERIALS, EQUIVALENT IN PERFORMANCE TO VIRGIN MATERIALS WITH A TOTAL (COMBINED) RECYCLED CONTENT VALUE (RCV) OF NOT BE LESS THAN 10 PERCENT OF THE TOTAL MATERIAL COST OF THE PROJECT.

REQUIRED TOTAL RCV (DOLLARS) = TOTAL MATERIAL COST(DOLLARS) × 10 PERCENT

FOR THE PURPOSES OF THIS SECTION, MATERIALS USED AS COMPONENTS OF THE STRUCTURAL FRAME SHALL NOT BE USED TO CALCULATE RECYCLED CONTENT. THE STRUCTURAL FRAME INCLUDES THE LOAD BEARING STRUCTURAL ELEMENTS, SUCH AS WALL STUDS, PLATES,SILLS, COLUMNS, BEAMS, GIRDERS, JOISTS, RAFTERS AND TRUSSES. SAMPLE FORMS WHICH ALLOW USER INPUT, LOCATED AT SHEET CG-4, MAY BE USED TO SIMPLIFY DOCUMENTING COMPLIANCE WITH THIS SECTION AND FOR CALCULATING RECYCLED CONTENT VALUE OF MATERIALS OR ASSEMBLY PRODUCTS.

SOURCES AND RECYCLED CONTENT OF SOME RECYCLED MATERIALS CAN BE OBTAINED FROM CALRECYCLE IF NOT PROVIDED BY THE MANUFACTURER.

FOR FURTHER INSTRUCTION SEE CALGREEN A4.405.3.

34. ONE OR MORE OF THE FOLLOWING MATERIALS MANUFACTURED FROM RAPIDLY RENEWABLE SOURCES OR AGRICULTURAL BY-PRODUCTS SHALL BE USED:

A. INSULATION.
B. BAMBOO OR CORK.
C. ENGINEERED PRODUCTS.
D. AGRICULTURAL BASED PRODUCTS.
E. OTHER PRODUCTS ACCEPTABLE TO THE ENFORCING AGENCY.

THE INTENT OF THIS SECTION IS TO UTILIZE BUILDING MATERIALS AND PRODUCTS WHICH ARE TYPICALLY HARVESTED WITHIN A 10-YEAR OR SHORTER CYCLE.

35. INSTALL FOUNDATION AND LANDSCAPE DRAINS WHICH DISCHARGE TO A DRY WELL, SUMP, BIOSWALE OR OTHER APPROVED ON-SITE LOCATION.

36. INSTALL GUTTER AND DOWNSPOUT SYSTEMS TO ROUTE WATER AT LEAST 5 FEET AWAY FROM THE FOUNDATION OR CONNECT TO LANDSCAPE DRAINS WHICH DISCHARGE TO A DRY WELL, SUMP, BIOSWALE, RAINWATER CAPTURE SYSTEM OR OTHER APPROVED ON-SITE LOCATION.

37. PROVIDE FLASHING DETAILS ON THE BUILDING PLANS WHICH COMPLY WITH ACCEPTED INDUSTRY STANDARDS OR MANUFACTURER'S INSTRUCTIONS. DETAILS SHALL BE SHOWN ON HOUSE PLANS AT ALL OF THE FOLLOWING LOCATIONS:

A. AROUND WINDOWS AND DOORS.
B. ROOF VALLEYS.
C. DECK CONNECTIONS TO THE STRUCTURE.
D. ROOF-TO-WALL INTERSECTIONS.
E. CHIMNEYS TO ROOF INTERSECTIONS.
F. DRIP CAPS ABOVE WINDOWS AND DOORS WITH ARCHITECTURAL PROJECTIONS.

38. PROTECT BUILDING MATERIALS DELIVERED TO THE CONSTRUCTION SITE FROM RAIN AND OTHER SOURCES OF MOISTURE.

39. EXTERIOR DOORS TO THE DWELLING SHALL BE COVERED TO PREVENT WATER INTRUSION BY ONE OR MORE OF THE FOLLOWING:

A. AN AWNING AT LEAST 4 FEET IN DEPTH IS INSTALLED.
B. THE DOOR IS PROTECTED BY A ROOF OVERHANG AT LEAST 4 FEET IN DEPTH.
C. THE DOOR IS RECESSED AT LEAST 4 FEET.
D. OTHER METHODS WHICH PROVIDE EQUIVALENT PROTECTION.

40. A PERMANENT OVERHANG OR AWNING AT LEAST 2 FEET IN DEPTH SHALL BE PROVIDED AT ALL EXTERIOR WALLS.

41. NON-HAZARDOUS CONSTRUCTION AND DEMOLITION DEBRIS GENERATED AT THE SITE SHALL BE DIVERTED TO RECYCLE OR SALVAGE IN COMPLIANCE WITH THE FOLLOWING:

AT LEAST A 65 PERCENT REDUCTION. ANY MIXED RECYCLABLES THAT ARE SENT TO MIXED-WASTE RECYCLING FACILITIES SHALL INCLUDE A QUALIFIED THIRD PARTY VERIFIED FACILITY AVERAGE DIVERSION RATE. VERIFICATION OF DIVERSION RATES SHALL MEET MINIMUM CERTIFICATION ELIGIBILITY GUIDELINES, ACCEPTABLE TO THE COUNTY OF SANTA CLARA.

DOCUMENTATION SHALL BE PROVIDED TO THE COUNTY OF SANTA CLARA WHICH DEMONSTRATES COMPLIANCE WITH THIS SECTION. DOCUMENTATION SHALL BE IN COMPLIANCE WITH CALGREEN SECTION 4.408.5.

42. USE COMPOSITE WOOD PRODUCTS MADE WITH EITHER CALIFORNIA AIR RESOURCES BOARD APPROVED NO-ADDED FORMALDEHYDE (NAF) RESINS OR ULTRA-LOW EMITTING FORMALDEHYDE (ULEF) RESINS.

DOCUMENTATION MUST BE PROVIDED THAT VERIFIES THAT FINISH MATERIALS ARE CERTIFIED TO MEET THE POLLUTANT EMISSION LIMITS.

43. AT LEAST 90 PERCENT OF THE TOTAL AREA OF RESILIENT FLOORING SYSTEMS INSTALLED IN THE BUILDING SHALL COMPLY WITH THE VOC-EMISSION LIMITS DEFINED IN AT LEAST ONE OF THE FOLLOWING:

A. PRODUCTS COMPLIANT WITH THE CALIFORNIA DEPARTMENT OF PUBLIC HEALTH, "STANDARD METHOD FOR THE TESTING AND EVALUATION OF VOLATILE ORGANIC CHEMICAL EMISSIONS FROM INDOOR SOURCES USING ENVIRONMENTAL CHAMBERS,"VERSION 1.1, FEBRUARY 2010 (ALSO KNOWN AS SPECIFICATION 01350), CERTIFIED AS A CHPS LOW-EMITTING MATERIAL IN THE COLLABORATIVE FOR HIGH PERFORMANCE SCHOOLS (CHPS) HIGH PERFORMANCE PRODUCTS DATABASE.
B. PRODUCTS CERTIFIED UL GREENGUARD GOLD (FORMERLY THE GREENGUARD CHILDREN & SCHOOLS PROGRAM.)
C. CERTIFICATION UNDER THE RESILIENT FLOOR COVERING INSTITUTE (RFCI) FLOORSCORE PROGRAM.
D. MEET THE CALIFORNIA DEPARTMENT OF PUBLIC HEALTH,"STANDARD METHOD FOR THE TESTING AND EVALUATION OF VOLATILE ORGANIC CHEMICAL EMISSIONS FROM INDOOR SOURCES USING ENVIRONMENTAL CHAMBERS," VERSION 1.1,FEBRUARY 2010 (ALSO KNOWN AS SPECIFICATION 01350.)

DOCUMENTATION MUST BE PROVIDED THAT VERIFIES THAT FINISH MATERIALS ARE CERTIFIED TO MEET THE POLLUTANT EMISSION LIMITS IN THIS SECTION.

44. INSTALL THERMAL INSULATION IN COMPLIANCE WITH THE CALIFORNIA DEPARTMENT OF PUBLIC HEALTH, "STANDARD METHOD FOR THE TESTING AND EVALUATION OF VOLATILE ORGANIC CHEMICAL EMISSIONS FROM INDOOR SOURCES USING ENVIRONMENTAL CHAMBERS," VERSION 1.1, FEBRUARY 2010 (ALSO KNOWN AS SPECIFICATION 01350), CERTIFIED AS A CHPS LOW-EMITTING MATERIAL IN THE COLLABORATIVE FOR HIGH PERFORMANCE SCHOOLS (CHPS) HIGH PERFORMANCE PRODUCTS DATABASE; PRODUCTS CERTIFIED UNDER THE UL GREENGUARD GOLD (FORMERLY GREENGUARD CHILDREN & SCHOOLS PROGRAM); OR MEET CALIFORNIA DEPARTMENT OF PUBLIC HEALTH, "STANDARD METHOD FOR THE TESTING AND EVALUATION OF VOLATILE ORGANIC CHEMICAL EMISSIONS FROM INDOOR SOURCES USING ENVIRONMENTAL CHAMBERS," VERSION 1.1, FEBRUARY 2010 (ALSO KNOWN AS SPECIFICATION 01350).

DOCUMENTATION MUST BE PROVIDED THAT VERIFIES THE MATERIALS ARE CERTIFIED TO MEET THE POLLUTANT EMISSION LIMITS IN THIS SECTION.

45. PROVIDE FILTERS ON RETURN AIR OPENINGS RATED AT MERV 8 OR HIGHER DURING CONSTRUCTION.

46. DIRECT-VENT HEATING AND COOLING EQUIPMENT SHALL BE UTILIZED IF THE EQUIPMENT WILL BE LOCATED IN THE CONDITIONED SPACE OR INSTALL THE SPACE HEATING AND WATER HEATING EQUIPMENT IN AN ISOLATED MECHANICAL ROOM.

Oceguera Residence
13115 Uvas Rd.
Morgan Hill, CA
A.P.N. 756-19-017 and 756-19-021

CALGreen Project Mandatory and Tier1 Requirements
County of Santa Clara

CG-4

03/30/2020