County of Santa Clara
Department of Planning and Development
County Government Center, East Wing, 7th Floor
70 West Hedding Street
San Jose, CA 95110
Phone: (408) 299-5700
www.sccplandev.org

STAFF REPORT
Zoning Administration
October 5, 2023

Item #1

Staff Contact: Lulu Pang, Assistant Planner
(408) 299-5718, lulu.pang@pln.sccgov.org

PLN22-063 (STANFORD UNIVERSITY)

Architecture and Site Approval and Grading Approval – Serra Street Reconstruction

Summary: Architecture & Site Approval (ASA) and Grading Approval for the reconstruction of Serra Street, between El Camino Real and Pampas Lane, including new pathways, lighting, and landscaping. The project includes 3,700 cubic yards of cut and 3,900 cubic yards of fill and a maximum vertical depth of 3 feet for the road reconstruction and the establishment of a temporary laydown/construction staging area on Pampas Lane.

Owner: Stanford University
Applicant: Gracie Cain, Project Manager
Address: Serra Street, Stanford
APN: 142-04-036

Community Plan Designation: Academic Campus
Zoning: A1
Project Area: 4 acres
Supervisorial District: 5

RECOMMENDED ACTIONS

A. Approve the use of a prior California Environmental Quality Act (CEQA) document [2000 Stanford Community Plan and General Use Permit (GUP) Program Environmental Impact Report (EIR)]; and,

B. Grant an Architecture & Site Approval (ASA) and Grading Approval, pursuant to Conditions of Approval outlined in Attachment B.

ATTACHMENTS INCLUDED

Attachment A – CEQA Determination – Use of a Prior CEQA Document

Attachment B – Preliminary ASA and Grading Conditions of Approval
Attachment C – Location & Vicinity Map
Attachment D – Proposed Plans

PROJECT DESCRIPTION

The proposed project is for the reconstruction of Serra Street, between El Camino Real and Pampas Lane, including upgrading the roadway, pedestrian and bicycle pathways, lighting, and landscaping. The project includes 3,700 cubic yards of cut, and 3,900 cubic yards of fill, with a maximum vertical depth of 3 feet for the road reconstruction and the establishment of a temporary laydown/construction staging area on Pampas Lane. Attachment C includes a location and vicinity map of the project site.

Eight (8) non-oak trees and one (1) oak tree over 12 inches in diameter are proposed to be removed. Of these, five (5) non-oak trees are protected, requiring five (5) new non-oak trees to be planted per the County of Santa Clara Tree Preservation Ordinance and 2000 Stanford GUP. In total, thirteen (13) new trees are proposed for planting on site. All remaining trees with a 12-inch or greater diameter surrounding the project site will be designated as protected after the approval of this ASA and Grading Approval.

No new parking space is proposed for this project. Six (6) existing parking spaces are proposed to be removed to accommodate the roadway improvements.

REASONS FOR RECOMMENDATION

A. Environmental Review and Determination (CEQA)

The proposed project is in conformance with both the 2000 Stanford Community Plan ("SCP") and General Use Permit ("GUP") and has no new effects beyond those analyzed in the Program EIR, certified by the Board of Supervisors in December 2000. The Program EIR analyzed the environmental impacts of campus development allowed under the SCP and GUP. The proposed project is within the scope of the campus development analyzed in the 2000 GUP. Therefore, the use of the prior CEQA document is adequate for this project.

B. Project/Proposal

1. Stanford Community Plan and GUP: The project conforms to applicable Community Plan goals, strategies, and policies. It is a permitted use within the General Use zoning designation, and as conditioned will satisfy the requirements of the GUP Condition D.1.b. The 2000 Community Plan and GUP govern development projects on the Stanford campus. This project conforms to the criteria set forth by the GUP and provisions identified within the Stanford Community Plan, and is subject to compliance with the preliminary conditions outlined in Attachment B.

2. **ASA approval:**

   ASA approval standards, applicable regulations, and findings: The project substantially conforms to the requirements and guidelines in the SCP and GUP. These requirements meet all of the ASA Guidelines through the ASA approval process approved by the Zoning Administrator.

ASA Findings:
Pursuant to §5.40.040 of the County Zoning Ordinance, the Zoning Administrator may grant an Architecture & Site Approval contingent upon specific findings. In the following discussion, the scope of review findings is listed in **bold**, and an explanation of how the project meets the required standard is in plain text below.

A. Adequate traffic safety, on-site circulation, parking and loading areas, and insignificant effect of the development on traffic movement in the area;

Long-term traffic
The project proposes to reconstruct Serra Street between Pampas Lane and El Camino Real and maintain the existing three eastbound vehicle lanes. The proposed improvements do not generate any new traffic. The proposed project will improve conditions for traffic, including vehicular, pedestrian, and bicycle traffic, through intersection management, additional pedestrian crossings and walkways, new street lighting, and landscaping. The proposed intersection management improves the vehicular transition from the main access via Serra Street to Olmstead Road, which functions as the secondary campus access road.

The project does not result in any change in the amount of traffic. The overall traffic coming to the Stanford campus would still be the same. Therefore, the traffic would be consistent with that analyzed in the prior 2000 GUP EIR.

Short-term construction traffic
The project will result in short-term impacts related to construction activities; however, conditions of approval have been added to this project to mitigate these short-term impacts to a "*less than significant level*". All construction trucks will be required to use approved truck routes, for transporting construction materials to and from the site. Furthermore, the project has been conditioned to restrict construction material deliveries to non-peak hours, as defined in the 2000 GUP EIR. Compliance with the Conditions of Approval (Attachment B) ensures that the short-term construction traffic associated with the project will not have a significant effect on traffic movement in the area.

Parking
Stanford addresses parking needs at the University in a comprehensive manner, staying within the parking cap established under the 2000 GUP. The project proposes to change parking on-site by removing six parking spaces to accommodate the modifications to the roadway. The remaining parking spaces within the parking lot will be maintained. There are several existing parking lots within a 500-foot radius of the project area for users driving to the Campus.

For the reasons stated above, this finding *can* be made.

B. Appearance of proposed site development and structures, including signs will not be detrimental to the character of the surrounding neighborhood or zoning district;

The site is within Stanford's Department of Athletics, Physical Education and Recreation (DAPER) and Administrative Development District, and the road improvements will follow Stanford University's design standards and will be consistent with other road improvements on campus. Hence, they will not be detrimental to the character of the surrounding core campus area.

For the reasons stated above, this finding *can* be made.

C. Appearance and continued maintenance of proposed landscaping will not be detrimental to the character of the surrounding neighborhood or zoning district;

The GUP and the SCP require that replacement trees, for those removed that are 12 inches or greater in diameter at 4.5 feet from grade level, be planted at a 1:3 ratio for all protected oak trees and at a minimum 1:1 ratio for all protected non-oak trees. Eight (8) non-oak trees and one (1) oak trees over 12 inches in diameter are proposed for removal. Of these, five (5) non-oak trees proposed for removal are county-protected trees as those were required to be retained by the conditions of approval for the previous ASA (County File No.: 1912). The other four (4) trees proposed for removal are not protected trees as they were not required to be retained by prior conditions. All remaining trees with a 12-inch or greater diameter surrounding the project site will be designated as protected after the approval of this ASA and Grading Approval, per plan pages L-1.0, L-2.0, and L-2.1.

A preliminary landscape plan was submitted by the applicant for review. The reconfigured landscaping includes thirteen (13) new trees proposed for planting on site (shown on sheets L-1.0&2.0&2.1of Attachment D). Of these, five (5) non-oak trees are replacement trees required by the County of Santa Clara Tree Preservation Ordinance and 2000 Stanford GUP.

No preliminary issues of concern were identified, and the preliminary landscape plan meets County requirements. Staff has added a condition of approval requiring that the landscaping meet the requirements of the SCP and GUP. The final landscape plan is also subject to the requirements of the County Sustainable Landscape Ordinance. As such, the final landscape plan will not be detrimental to the character of the surrounding area and will blend in with the character of the surrounding area. As such, this finding *can* be made.

D. No significant, unmitigated adverse public health, safety and environmental effects of proposed development;

The Program GUP EIR certified by the Board of Supervisors in December 2000 analyzed the environmental impacts of Stanford campus development allowed under the SCP and GUP. The proposed project is within the scope of the development analyzed in the 2000 GUP EIR. All appropriate conditions of approval have been added to ensure conformance with the 2000 GUP EIR.

The prior CEQA analysis concluded that the proposed development would not result in any significant environmental impacts as it relates to parking, traffic, construction noise,

and air quality. The project has been reviewed with respect to all applicable regulations relating to public health and safety by County subject matter experts, including Land Development Engineering, Department of Environmental Health, and the Fire Marshal. All subject matter experts have recommended approval of the project with Conditions and determined that the project will not result in significant, unmitigated adverse public health, safety, or environmental effects. Furthermore, the CEQA analysis for the project determined that with the conditions of approval, the project would not result in any significant environmental impacts (See Attachment A). As such, this finding *can* be made.

E. No adverse effect of the development on flood control, storm drainage, and surface water drainage;

The project site does not contain any creeks or streams and is not located within a 100-year flood zone. The project has been reviewed by County Land Development and Engineering staff with respect to all applicable regulations relating to drainage and flood control. As such, this finding *can* be made.

F. Adequate existing and proposed fire protection improvements to serve the development;

The Fire Marshal's Office has reviewed and conditioned the project to ensure existing and proposed fire protection access and water supply are in conformance with applicable regulations. Compliance with the preliminary conditions outlined in Attachment B shall ensure that the project will have adequate fire protection improvements. For these reasons, this finding *can* be made.

G. No significant increase in noise levels;

Due to the nature of the proposed use, and its location within the Stanford Campus area, the project is not anticipated to cause any significant increases in noise levels. The project may create short-term/temporary construction noise impacts due to construction activities and construction traffic. The project has been conditioned to limit construction activities to the hours of 7 AM and 7 PM, Monday through Saturday, with no construction activity occurring between the hours of 7 PM and 7 AM, or on Sundays. Therefore, as conditioned, this finding *can* be made.

H. Conformance with zoning standards, unless such standards are expressly eligible for modification by the Zoning Administrator as specified in the Zoning Ordinance.

The project site is zoned A1, which is the "General Use" zoning district that provides for general purpose uses subject to discretionary land use approvals. The standards applicable to development within this zoning district are listed in Table 2.50-2 of the County Zoning Ordinance. The project complies with the development standards set forth in the zoning ordinance. As such, this finding *can* be made.

I. Conformance with the general plan and any applicable area or specific plan, or, where applicable, city general plan conformance for property located within a city's urban service area; and

The Stanford academic campus is primarily designated as Major Educational and Institutional Use within the Santa Clara County General Plan. The Community Plan identifies the project site as an Academic Campus (AC). The proposed project is the reconstruction of Serra Street and complies with the applicable policies set forth in the Stanford Community Plan. As such, this finding *can* be made.

J. Substantial conformance with the adopted "Guidelines for Architecture and Site Approval" and other applicable guidelines adopted by the County.

Some suggested regulations that are addressed in the ASA Guidelines are superseded by the requirements and guidelines of the SCP and GUP. Nonetheless, conformance with the SCP and GUP is consistent with the ASA Guidelines. As such, this finding *can* be made.

Grading Findings:
Pursuant to Section C12-433, all Grading Approvals are subject to specific findings. In the following discussion, the scope of review findings is listed in **bold**, and an explanation of how the project meets the required standard is in plain text below.

A. The amount, design, location, and the nature of any proposed grading is necessary to establish or maintain a use presently permitted by law on the property.

Proposed grading quantities associated with the Grading Approval include 3,700 c.y. of cut and 3,900 c.y. of fill, with a maximum depth of 3 feet for the reconstruction of Serra Street and the establishment of a temporary laydown/construction staging area on Pampas Lane. The proposed grading substantially matches the natural terrain and existing topography of the site. The laydown area is "temporary" and as conditioned (please see Condition of Approval No.3), the gravel/aggregate base rock required to prepare the laydown area would be removed and the area reinstated to its original condition after project completion. Therefore, the amount, design, location and the nature of proposed grading is necessary to establish the roadway improvements, which are a permissible use in the Al zoning district. As such, this finding *can* be made.

B. The grading will not endanger public and/or private property, endanger public health and safety, will not result in excessive deposition of debris or soil in the watercourse.

The applicant will be required to obtain a Grading Permit through the County's Land Development Engineering, which will ensure that the project adequately drains to an approved location. No excessive material will be deposited onsite. All excess grading will be hauled to a County-approved off-site facility. Furthermore, no grading is

proposed near a creek that may impair any existing spring or watercourse. As such, this finding *can* be made.

C. Grading will minimize impacts to the natural landscape, scenic, biological and aquatic resources, and minimize erosion impacts.

The proposed grading has been designed to minimize impacts to existing landscaping, and will not result in any scenic, biological, or aquatic resource impacts. Compliance with the conditions of approval (Attachment B) has been identified and is required to minimize impacts to the natural landscape, scenic, biological, and aquatic resources, and minimize erosion impacts. As such, this finding *can* be made.

D. For grading associated with a new building or development site, the subject site shall be one that minimizes grading in comparison with other available development sites, taking into consideration other development constraints and regulations applicable to the project.

Estimated grading quantities with this project are 3,700 c.y. of cut and 3,900 c.y. of fill, with a maximum cut depth of 3 feet and a maximum fill depth of 1.3 feet. The cut and fill depths are required for the reconstruction of the driveway and to establish the construction laydown area. The proposed grading is not for a new building or development site. The project site is an existing road serving the residential and academic uses on the campus. The proposed grading, with compliance with the conditions of approval in Attachment B, will be in conformance with all applicable regulations. As such, this finding *can* be made.

E. Grading and associated improvements will conform with the natural terrain and existing topography of the site as much as possible and should not create a significant visual scar.

The proposed grading is designed to conform with existing topography to the maximum extent possible, to minimize grading and visual impacts. As such, this finding *can* be made.

F. Grading conforms with any applicable general plan or specific plan policies; and

The proposed grading is in conformance with specific findings and policies identified in the County General Plan. The proposed grading is designed to minimize grading and to reduce visual impacts from surrounding uses in keeping with General Plan policies. The proposed grading is compatible with the surrounding development in the area. As such, this finding *can* be made.

G. Grading substantially conforms with the adopted "Guidelines for Grading and Hillside Development" and other applicable guidelines adopted by the County.

The project site is in the Al zone on the academic campus of Stanford University, and is not located within a hillside zoning district. As such, this finding *does not apply* to the site.

BACKGROUND

On December 12, 2000 the County of Santa Clara approved the 2000 Stanford University Community Plan and General Use Permit (GUP), governing development projects on the Stanford campus. The GUP allows Stanford to construct up to 2,035,000 net square feet of academic and academic support uses, 3,018 new housing units, and 2,300 net new parking spaces on Stanford lands. The GUP was subsequently amended three times to move permitted academic square footage from one district to another, provide flexibility in the type of housing construction, and for additional housing.

On March 24, 2022, an application for Architecture and Site Approval and Grading Approval was submitted for the reconstruction of Serra Street between Pampas Lane and El Camino Real, including pathways, lighting, and landscaping. The application was deemed incomplete on May 22, 2022 and was resubmitted on February 22, 2023. Subsequently, the application was deemed incomplete on June 15, 2023 and was resubmitted August 2, 2023. Subsequently, the application was deemed complete on September 5, 2023.

As of writing this report, no public comments were received for this application. A public notice was mailed to all property owners within a 300-foot radius and the interested parties list on September 21, 2023 and was also published in the Post Records on September 21, 2023.

STAFF REPORT REVIEW

Prepared by: Lulu Pang, Assistant Planner

DocuSigned by:
Lulu Pang 9/28/2023
141F3FF92BA948B...

Reviewed by: Samuel Gutierrez, Principal Planner

DocuSigned by: 9/28/2023
4BFDD21FF1FB4D2...

USE OF A PRIOR CEQA DOCUMENT
PROGRAM ENVIRONMENTAL IMPACT REPORT (EIR)

Pursuant to Section 15162 of the CEQA Guidelines, the County of Santa Clara has determined that the project described below is pursuant to or in furtherance of an Environmental Impact Report which has been previously adopted and does not involve new significant impacts beyond those analyzed in the previous Environmental Impact Report.

File Number	**APN(s)**	**Date**
PLN22-063	142-04-036	October 05, 2023
Project Name	**Project Type**	
Reconstruction of Serra Street between El Camino Real and Pampas Lane	Architecture & Site Approval and Grading Approval	
Owner	**Applicant**	
Stanford University	Gracie Cain, Project Manager	
Project Location		
Serra Street, Stanford		
Project Description		
Architecture & Site Approval (ASA) for the reconstruction of Serra Street, between El Camino Real and Pampas Lane, including new pathways, lighting, and landscaping. The project includes 3,700 cubic yards of cut and 3,900 cubic yards of fill and a maximum vertical depth of 3 feet for the road reconstruction and the establishment of a temporary laydown/construction staging area on Pampas Lane.		
Background and Summary of Findings		

Per the California Environmental Quality Act (CEQA) of 1970 (as amended), all development permits processed by the County Planning Office which require discretionary approval are subject to environmental review. A new Negative Declaration or EIR is not required if a previous CEQA document has been prepared and adopted or certified which adequately addresses all the possible environmental impacts of the proposed project and (a) no substantial changes are proposed in the project which will result in new significant environmental effects, (b) no substantial changes have occurred with respect to the circumstances under which will result in the identification of new significant impacts, or (c) no new information is available which shows that the project will have new significant impacts or mitigation measures and alternatives which were previously found to be infeasible would now in fact be feasible (CEQA Guidelines 15162).

The Planning Office evaluated the project described above and has determined that none of the circumstances exist which would require additional environmental review. As such the environmental impacts of the project have been adequately evaluated in the Environmental Impact Report adopted by the Board of Supervisors on December 15, 2000, for the project entitled "Stanford University Community Plan and General Use Permit" and that no further environmental review is required under the California Environmental Quality Act.

Prepared by: Lulu Pang, Assistant Planner	DocuSigned by: Lulu Pang 141F3FF92BA948B... **Signature**	9/28/2023 **Date**

ATTACHMENT B

PRELIMINARY CONDITIONS OF APPROVAL
FOR
ARCHITECTURE & SITE APPROVAL AND GRADING APPROVAL

Date:	October 5, 2023
Owner/Applicant:	Stanford University/ Gracie Cain, Project Manager
Location:	Serra Street, Stanford (APN: 142-04-036)
File Number:	PLN22-063
CEQA:	Prior CEQA - 2000 Stanford Community Plan and General Use Permit (GUP) Program Environmental Impact Report (EIR)
Project Description:	Concurrent land use application including an Architecture & Site Approval (ASA) and Grading Approval for the reconstruction of Serra Street, between El Camino Real and Pampas Lane, including new pathways, lighting, and landscaping. The project includes 3,700 cubic yards of cut and 3,900 cubic yards of fill and a maximum vertical depth of 3 feet for the road reconstruction and the establishment of a temporary laydown/construction staging area on Pampas Lane.

If you have any questions regarding the following preliminary conditions of approval, call the person whose name is listed as the contact for that agency. They represent a specialty or office and can provide details about the conditions of approval.

Agency	Name	Phone	E-mail
Planning	Lulu Pang	(408) 299-5718	lulu.pang@pln.sccgov.org
Land Development Engineering	Ed Duazo	(408) 299-5733	ed.duazo@pln.sccgov.org
Fire Marshal	Alex Goff	(408) 299-5763	alex.goff@sccfd.org
Environmental Health	Darrin Lee	(408) 573-2464	darrin.lee@cep.sccgov.org
Building Inspection	Building Inspection Office	(408) 299-5700	

STANDARD CONDITIONS OF APPROVAL

Building Inspection

1. File and obtain demolition, grading, and building permits for the project by submitting to the Development Services Division within the Department of Planning and Development via the online portal. For detailed information about the requirements for a building

permit, obtain a Building Permit Application Instruction handout from the Office of Building Inspection or visit their website (www.sccbuilding.org).

Planning

2. Development and maintenance of the project site shall take place in accordance with approved plans, received by the Planning Department on August 02, 2023. The project allows the reconstruction of Serra Street, between El Camino Real and Pampas Lane, including new pathways, lighting, and landscaping. The project includes 3,700 cubic yards of cut and 3,900 cubic yards of fill and a maximum vertical depth of 3 feet for the road reconstruction and the establishment of a temporary laydown/construction staging area on Pampas Lane. The plans submitted into Plan Check shall be in substantial conformance with the approved plans. Any changes to the approved project included such as (but not limited to) the design, quantity, location or other modifications to the approved plans are required to be submitted for review by the Planning Office and may result in a Modification to the approved ASA and Grading Approval and may be subject to additional review under the California Environmental Quality Act (CEQA).

3. The laydown area as shown on sheet C-1 is approved for temporary storage of equipment and construction supplies associated with the Serra Street Reconstruction project only. No other project shall utilize this laydown area.

4. The project shall comply with the Stanford University 2000 General Use Permit Conditions of Approval, and approved Stanford University 2000 GUP Mitigation Monitoring and Reporting Program.

5. Stanford shall be responsible for paying all reasonable costs associated with work by the County Planning Department, or with work conducted under the supervision of the County Planning Office, in conjunction with, or in any way related to the conditions of approval identified in this project. This includes but is not limited to costs for staff time, consultant fees, and direct costs associated with report production and distribution.

6. In the event that previously unidentified historic or prehistoric archaeological resources are discovered during construction, the contractor shall cease work in the immediate area and the County Planning Office and Campus Archaeologist shall be contacted. An independent qualified archaeologist retained by the County at the expense of Stanford shall assess the significance of the find and make mitigation recommendations.

7. If archeological resources are discovered as described above, construction monitoring shall be conducted at any time ground-disturbing activities (greater than 12 inches in depth) are taking place in the immediate vicinity of the identified resources. If monitoring does not produce evidence of significant cultural resources within the project area, further mitigation shall be limited to construction monitoring, unless additional testing or other specific mitigation measures are determined by a qualified archaeologist to be necessary to ensure avoidance of damage to significant archaeological resources. A technical report of findings describing the results of all monitoring shall be prepared in accordance with

professional standards. The archaeological monitoring program shall be implemented by an individual meeting the Secretary of Interior Professional Qualifications Standards in Archaeology (36 CFR 61); individual field monitors shall be qualified in the recognition of cultural resources and possess sufficient academic and field training as required to conduct the work effectively and without undue delay.

8. In the event that human skeletal remains are encountered, the applicant is required by County Ordinance No. B6-18 to immediately notify the County Coroner. Upon determination by the County Coroner that the remains are Native American, the coroner shall contact the California Native American Heritage Commission, pursuant to subdivision (c) of section 7050.5 of the Health and Safety Code and the County Coordinator of Indian affairs. No further disturbance of the site may be made except as authorized by the County Coordinator of Indian Affairs in accordance with the provisions of state law and this chapter. If artifacts are found on the site a qualified archaeologist shall be contacted along with the County Planning Office. No further disturbance of the artifacts may be made except as authorized by the County Planning Office.

9. In the event that a fossilized shell or bone is uncovered during any earth-disturbing operation, contractors shall stop work in the immediate area of the find and notify the Campus Archaeologist and the County Building Inspector assigned to the project. The Campus Archaeologist shall visit the site and make recommendations for treatment of the find (including but not limited to consultation with a paleontologist and excavation, if warranted), which would be sent to the County Building Inspection Office and the County Planning Office. If a fossil find is confirmed, it will be recorded with the United States Geological Survey and curated in an appropriate repository.

Department of Environmental Health

10. All construction activities shall be in conformance with the Santa Clara County Noise Ordinance Section B11-154 and prohibited between the hours of 7:00 p.m. and 7:00 a.m. on weekdays and Saturdays, or at any time on Sundays for the duration of construction.

CONDITIONS OF APPROVAL TO BE COMPLETED PRIOR TO GRADING PERMIT ISSUANCE

Planning

11. Place a construction note on the site plan that states the following: *"The Bay Area Air Quality Management District (BAAQMD) has identified a set of feasible PM10 control measures for all construction activities. These control measures, as previously required in the Program EIR, shall be adhered to during all construction activities.*

    A. Water all active construction areas at least twice daily;

B. *Cover all trucks hauling soil, sand, and other loose materials or require all trucks to maintain at least two feet of freeboard;*
C. *Pave, apply water three times daily, or apply (non-toxic) soil stabilizers on all unpaved access roads, parking areas and staging areas at construction sites;*
D. *Sweep daily (with water sweepers) all paved access roads, parking areas and staging areas at construction sites;*
E. *Sweep streets daily (with water sweepers) if visible soil material is carried onto adjacent public streets;*
F. *Hydroseed or apply (non-toxic) soil stabilizers to inactive construction areas (previously graded areas inactive for ten days or more);*
G. *Enclose, cover, water twice daily or apply (non-toxic) soil binders to exposed stockpiles (dirt, sand,);*
H. *Limit traffic speeds on unpaved roads to 15 mph;*
I. *Install fiber rolls, sandbags or other erosion control measures to prevent silt runoff to public roadways;*
J. *Replant vegetation in disturbed areas as quickly as possible;*
K. *Install wheel washers for all existing trucks, or wash off the tires of tracks of all trucks and equipment leaving the site; and*
L. *Suspend excavation and grading activity when winds (instantaneous gusts) exceed 25 mph."*

12. Place a construction note on the site plan that states the following*: "All construction contractors shall properly maintain the equipment and where feasible, use "clean fuel" equipment and emissions control technology (e.g., CNG fired engines, catalytic converters, particulate traps, etc.). Measures to reduce diesel emission would be considered feasible when they are capable of being used on equipment without interfering substantially with equipment performance."*

13. Submit a site plan that shows all pedestrian and bicycle corridors along with public transit stops adjacent to the project site and indicate how bicycle, pedestrian, and public transit access and circulation will be maintained during construction. Bicycle and pedestrian access onto the campus and around the site (outside construction areas) shall not be substantially limited by construction activities associated with the project. In addition, access to public transit shall not be limited, which could include the relocation or removal of adjacent bus stops.

14. Final grading permit plans shall include the following construction notes:
    A. Stanford shall make feasible attempts to limit the number of construction material deliveries from 7:00 a.m. to 9:00 a.m. and from 4:00 p.m. to 6:00 p.m. (peak-hours) on weekdays. Construction material delivery shall not result in reduction in on-street parking; reduction in pedestrian, bicycle, and public transit access; use of non-truck routes by construction traffic; damage to roadways; and interference with special events (This construction note shall be included in the Final grading permit plans). Stanford shall provide estimated total construction material deliveries, as well as estimated material deliveries, between these peak-hours as part of the Construction Logistics and

Management Plan, and provide notice to residents and interested parties for deliveries during peak hours.

B. Trucks exporting/importing dirt and building materials for the project shall use approved truck routes shown in the 2000 GUP, as designated by the cities of Palo Alto and Menlo Park.

15. Submit a Construction Management and Logistics Plan for approval by Planning and Land Development Engineering, **prior to issuance of any grading permits,** that clearly identifies the elements listed below:

    A. Provide the location, anticipated quantities and time frame for construction staging and earthwork stockpiling associated with this project. Said location is required to be approved by Planning and Land Development Engineering.
    B. Provide off-street construction related parking. Identify off-street parking location(s) on site plan for all construction related vehicles (employee parking and construction equipment) throughout the construction period. If adequate parking cannot be provided on the construction sites, identify on the site plan or vicinity map the satellite parking location(s) that will be used.
    C. Prohibit impacts to accessing public transit access and movement of public transit vehicles. Identify on site plan all temporary or permanent access limitations, re-routes, lane closures, or limits to public transit movements or place a note on the site plan stating "No temporary or permanent access limitations, re-routes, lane closures, or limits to public transit movement are permitted."
    D. Prohibit roadway construction activities from reducing roadway capacity during Stanford major athletic and special events. Stanford shall not limit roadway capacity during special events or during major athletic events, which attract a large number of visitors to the campus.
    E. Provide written notification to Stanford Police and Palo Alto Fire Department regarding construction location and construction dates. Include in the notices alternate evacuation and emergency route designations to maintain response times during construction periods, if applicable. Provide one copy of the notices to the County.
    F. Provide written notification to all contractors and subcontractors regarding appropriate routes and weight limits and speed limits for local roads used to access construction sites. Provide one copy of the notices to the County Planning Office.
    G. Provide notification to the Cities of Palo Alto and Menlo Park of the construction schedule and include a copy of the Santa Clara County approved Construction and Traffic Management Plan. Provide one copy of the notices to the County Planning Office.

16. The following tree removal/protection requirements shall apply:
    A. Eight (8) non-oak trees and one (1) oak tree over 12 inches in diameter at 4.5 feet above grade are authorized for removal with this project (refer to approved plan pages L-1.0, L-2.0 and L-2.1). Oak trees and non-oak trees are to be planted on site.
    B. All other trees in the project area shall remain and are protected after the approval of this ASA and Grading Approval, per plan pages L-1.0, L-2.0 and L-2.1.

C. If any trees are proposed to be removed after the approval of the ASA, further review by the Planning Office may be required to assess the visual impact of the tree removal on the project and surrounding area.
D. Final grading plans shall show the size and species of all trees over 12 inches in diameter (at 4.5 feet above grade) within the proposed work area for the project and clearly label all trees proposed for removal. This shall include all trees where construction will occur within the dripline of the tree.
E. An I.S.A.-certified arborist shall review final grading plans. The objective shall be to ensure that all the trees adjacent to the improvements will not be damaged or removed.
F. A certified arborist shall monitor the construction and provide written recommendations to preserve any potentially impacted trees associated with the proposed improvements. Submit a plan-review letter prior to the issuance of the final grading permit evaluating the consistency of final grading plans with these mitigations and a construction-observation letter prior to the issuance of final occupancy summarizing the implementation of these mitigation measures.
    i. Provide an arborist report that recommends effective tree protection measures for the site's existing trees that have not been slated for removal. Protection measures must be in place prior to construction activity commencing.

17. Adequate signs shall be posted along the street frontages or in front of the project site, no smaller than 1,296 square inches in size, containing the name, telephone number, and email address of the appropriate Stanford person the public may contact to register a complaint about construction noise. Additionally, Stanford shall create an outreach and information portal to facilitate information and alerts to be delivered to the immediate neighborhoods on construction activities. Stanford shall keep a written record of all such complaints and shall provide copies of these records to the County Planning Office.

18. Preconstruction surveys for nesting raptors and migratory birds shall be conducted by a qualified ornithologist to identify active nests that may be disturbed during project implementation. Between January 1 and April 30, preconstruction surveys shall be conducted no more than 14 days **prior to the initiation of construction activities or tree removal**. Between May 1 and August 31, preconstruction surveys no more than 30 days **prior to the initiation of these activities**. Stanford University shall conduct an additional preconstruction survey within 24 hours of the initiation of construction activities, by the Campus Biologist, to verify no new nesting has occurred. If an active nest is found near, or in close proximity to, the construction area where the nest could be disturbed by these activities, the ornithologist or Campus Biologist, shall, in consultation with the California Department of Fish and Game, designate a construction-free buffer zone (typically 250 feet) around the nest.

19. Landscape Plan: The requirements of Division B33 of the County Ordinance Code (Sustainable Landscape Ordinance) shall apply. As proposed, if the total landscape area exceeds 2,500 sq. ft., a landscape documentation package shall be submitted **prior to grading permit issuance** for review and approval. New landscaping shall be similar to existing landscaping on-site and meet all Stanford Community Plan and General Use Permit requirements. The submittal shall include a landscaping plan and irrigation plan,

stamped and signed by a licensed landscape architect. Submit the final landscape plan and associated irrigation systems, prepared and stamped by a licensed landscape architect.

The landscape ordinance and supporting information can be found on the Planning Department web site: https://plandev.sccgov.org/landscape-ordinance

20. Incorporate any applicable water conservation and recycling measures into the project building plans, which may include but not be limited to: water efficient landscape, landscape water management, and public outreach.

21. **Prior to grading permit issuance**, submit a detailed lighting plan which includes all new exterior lighting. The Lighting Plan shall provide light fixture details (cut sheets) with lighting profiles and product-specific information that includes the following information:

    Depict the extent of illumination from all new outdoor lighting (photometric plan, beam patterns). The Photometric plan shall note the light fixtures and their locations relative to their photometrics on the plan. Light poles or mounting details must also be included. Lighting shall include light fixtures that are shielded. All lighting shall be downward-directed and shall only illuminate the area intended. Ensure absence of upward glow. Use "state-of-the-art" luminaries including those with high beam efficiency.

Land Development Engineering

22. Obtain a Grading Permit from Land Development Engineering (LDE) prior to beginning any construction activities. Issuance of the grading permit is required **prior to LDE clearance of the building permit** (building and grading permits can be applied for concurrently). If the grading and building construction are to be phased, then issuance of the foundation permit shall be contingent on issuance of the rough grading permit, and issuance of the final grading permit shall be contingent on issuance of the final/finish grading permit. The process for obtaining a Grading Permit and the forms that are required can be found at the following web page:

    www.sccplanning.org > How To > Apply for a Development Permit… > Grading Permit

23. Final plans shall include a single sheet which contains the County standard notes and certificates as shown on County Standard Cover Sheet. Plans shall be neatly and accurately drawn, at an appropriate scale that will enable ready identification and recognition of submitted information.

24. Final grading plans shall be prepared by a licensed civil engineer for review and approval by LDE and the scope of work shall be in substantial conformance with the conditionally approved preliminary plans on file with the Planning Office. Include plan, profile, typical sections, contour grading for all street, road, driveway, structures and other improvements as appropriate for construction. The final design shall be in conformance with all currently adopted standards and ordinances. The following standards (Land Development

Engineering Standards and Policies Manual, Volume 1, and 2007 Santa Clara County Drainage Manual) are available on-line:

www.sccplanning.org > Ordinances & Codes > Land Development Standards and Policies

www.sccplanning.org > Ordinances & Codes > Grading & Drainage Ordinance

25. Survey monuments shall be shown on the improvement plan to provide sufficient information to locate the proposed improvements and the property lines. Existing monuments must be exposed, verified and noted on the grading plans. Where existing monuments are below grade, they shall be field verified by the surveyor and the grade shall be restored and a temporary stake shall be placed identifying the location of the found monument. If existing survey monuments are not found, temporary staking delineating the property line may be placed prior to construction and new monuments shall be set prior to final acceptance of the improvements. The permanent survey monuments shall be set pursuant to the State Land Surveyor's Act. The Land Surveyor / Engineer in charge of the boundary survey shall file appropriate records pursuant to Business and Professions Code Section 8762 or 8771 of the Land Surveyors Act with the County Surveyor.

26. The improvement plans shall include an Erosion and Sediment Control Plan that outlines seasonally appropriate erosion and sediment controls during the construction period). Include the County's Standard Best Management Practice Plan Sheets BMP-1 and BMP-2 with the Plan Set.

27. All new on-site utilities, mains, and services shall be placed underground and extended to serve the proposed development. All extensions shall be included in the improvement plans. Off-site work should be coordinated with any other undergrounding to serve other properties in the immediate area.

28. In the grading plans, include a stormwater management plan that details how the project complies with Provision C.3 of the current NPDES Municipal Regional Permit. Include C.3 sizing calculations to support the information provided in the stormwater management plan.

29. Preliminary plans indicate that the project will change the drainage capture area of the East Campus C.3 Regional Stormwater Capture Facility near the intersection of Serra Street and El Camino Real. In the Stormwater Management Plan, provide details documenting the changes in the regional facility's capture boundary area.

30. Submit an updated Credit/Usage Capacity Tracking Sheet for the Stanford University East Campus C.3 Regional Stormwater Capture Facility. The update shall include any changes created by the change in capture area of the regional facility.

31. Indicate on the grading plans the land area that will be disturbed. If one acre or more of land area will be disturbed, file a Notice of Intent (NOI) with the State Water Resources Control Board for coverage under the State General Construction Permit. The SWRCB will

issue a Waste Discharge Identification (WDID) number. The WDID number shall be shown on the grading plans. The SWRCVB website is:

www.waterboards.ca.gov > Programs > Stormwater > Construction

32. Demonstrate that the on-site drainage will be controlled in such a manner as to not increase the downstream peak flow for the 10-year and 100-year storm event or cause a public nuisance.

33. Submit a signed/stamped copy of the geotechnical report for the project.

34. Submit a geotechnical plan review letter, signed and stamped by the project geotechnical engineer, certifying that the grading plans conform to the recommendations provided in the project geotechnical report.

Fire Marshal's Office

35. Existing fire hydrants to be kept clear and operable at all times.

36. Fire Department access to be maintained at a minimum of 20 feet drivable width.

37. Fire department access to be made of an "all weather" material capable of holding 75,000 pounds.

CONDITIONS OF APPROVAL TO BE COMPLETED PRIOR TO OCCUPANCY OR FINAL INSPECTION

Planning

38. All grading materials and stockpiled materials shall be removed and disposed at an approved location.

39. Restore the laydown area to its original condition and remove the gravel/aggregate base from the laydown area.

40. Following completion of construction, contact the Planning Department (Lulu Pang at 408-299-5718) **at least two weeks in advance** to set up an appointment to schedule a site visit to verify the development is per approved plans.

Land Development Engineering

41. Construct the improvements. Construction staking is required and shall be the responsibility of the developer.

42. Existing and set permanent survey monuments shall be verified by inspectors prior to final acceptance of the improvements by the County. Any permanent survey monuments

damaged or missing shall be reset by a licensed land surveyor or registered civil engineer authorized to practice land surveying and they shall file appropriate records pursuant to Business and Professions Code Section 8762 or 8771 of the Land Surveyors Act with the County Surveyor.

43. The project proposes use of expanded capacity from the East Campus C.3 Regional Stormwater Capture Facility. The facility's expanded capacity is being permitted under County Record No. DEV23-0612. Prior to final sign-off, the facility's expansion shall be completed (i.e., the expanded capacity shall be on-line and received final sign-off).

44. Submit as-built plans. If there have been any changes to the stormwater management plan (e.g., a change in new/replacement impervious area, change in credit/capacity usage, etc.), submit an updated Credit/Usage Capacity Tracking Sheet with the as-built.

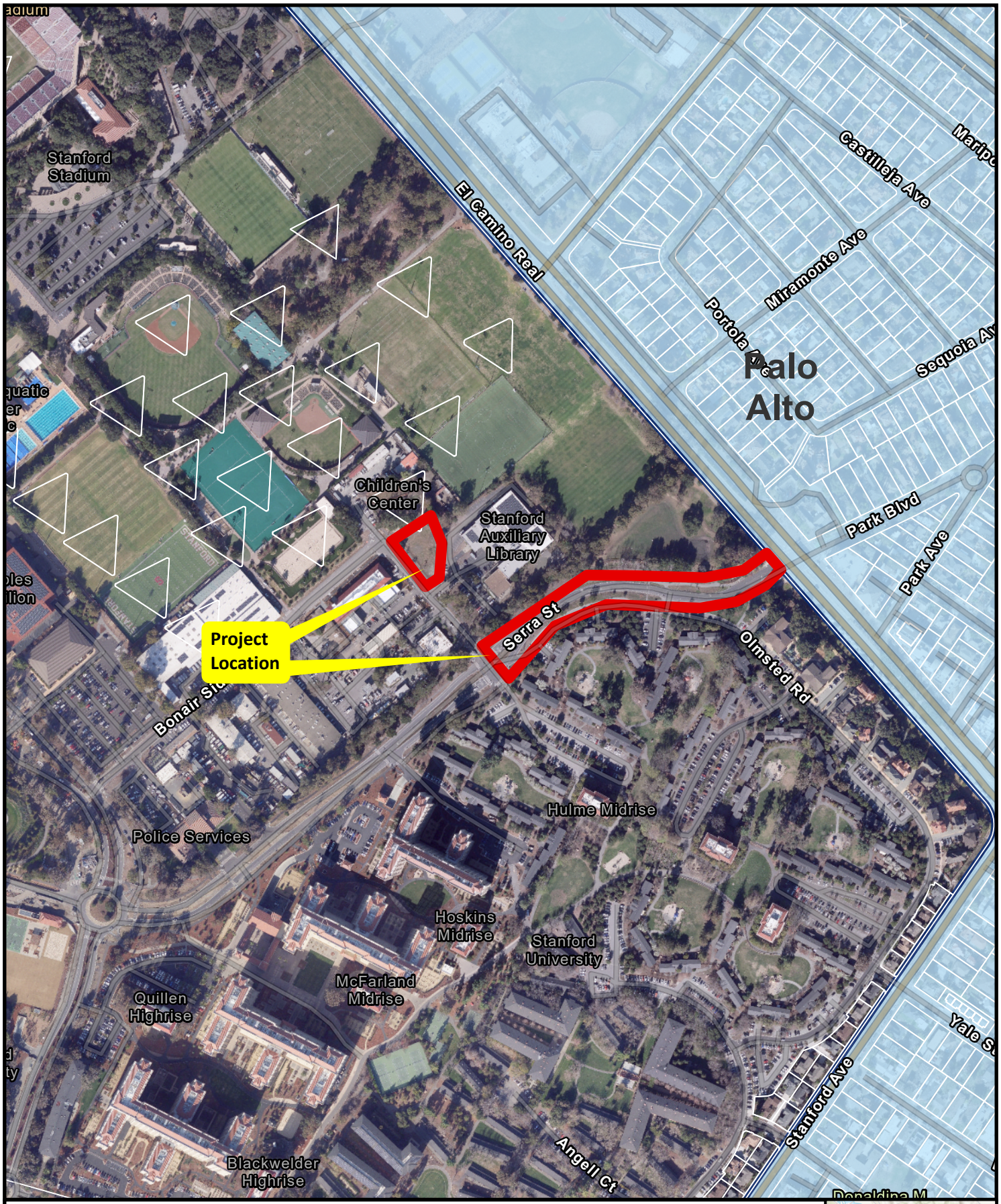

Location and Vicinity Map

Record No. PLN22-063
APN 142-04-036
Stanford Serra Street Reconstruction

N

500
Feet

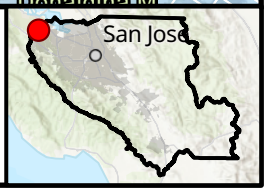

ASA SUBMITTAL SET

STANFORD UNIVERSITY
SERRA STREET – PAMPAS TO EL CAMINO REAL

PROJECT # 5227

SERRA STREET AND PAMPAS LANE | Stanford , California | Quad #10-000

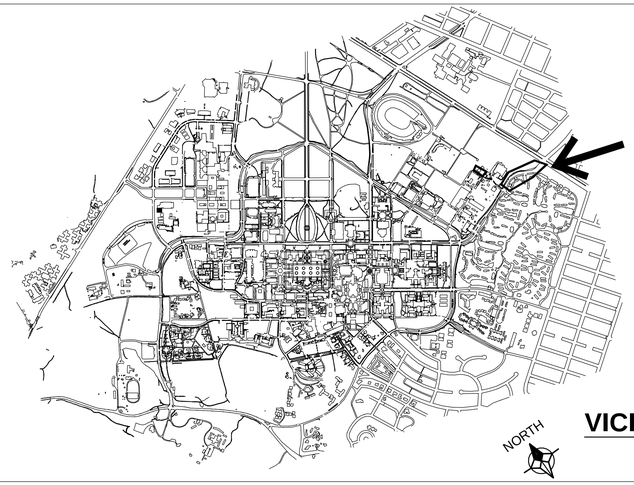

VICINITY MAP

DRAWING INDEX

SITE DATA INFORMATION

GENERAL

APN:	142-04-036
PARCEL SIZE:	580.15 AC
DEVELOPMENT DISTRICT:	DAPER AND ADMINISTRATIVE/ EAST CAMPUS
LAND USE DESIGNATION:	ACADEMIC CAMPUS
SITE AREA:	3.78 AC
DEMOLITION AREA:	2.83 AC

PERCENTAGE OF SITE AREA:

BUILDING:	0%
PARKING/DRIVEWAYS:	0%
SIDEWALKS/STREETS:	47%
OUTSIDE STORAGE:	0%
LANDSCAPING:	53%
UNDEVELOPED:	0%
ESTIMATED CUT AND FILL:	
CUT:	3,700 CUBIC YARDS
FILL:	3,900 CUBIC YARDS

PROJECT DESCRIPTION

RECONSTRUCT SERRA STREET BETWEEN PAMPAS LANE AND EL CAMINO REAL INCLUDING PATH, LIGHTING AND LANDSCAPE.

PROJECT MANAGER

STEVE BUI
340 BONAIR SIDING ROAD
PALO ALTO, CA 94305
(650) 497-0285
SteveBui@stanford.edu

BKF ENGINEERS / SURVEYORS / PLANNERS
1730 N. FIRST STREET
SUITE 600
SAN JOSE, CA 95112
408-467-9100
408-467-9199 (FAX)

STANFORD UNIVERSITY
SERRA STREET – PAMPAS TO EL CAMINO REAL
TITLE SHEET
SANTA CLARA COUNTY CALIFORNIA
STANFORD

No.	Revisions

Date: 07/18/2023
Scale: –
Design: CU
Drawn: CU
Approved: DP
Job No: 20156102

Drawing Number:
PL0.0
OF

DRAWING NAME: S:\JOB15\20156_Serra_Sunshine\CAD\PLOT-SERRA-CASTY-01-USE-TS.dwg
PLOT DATE: 07-18-23
PLOT TIME: 10:17

APPLICANT: STANFORD UNIVERSITY | ROAD NAME: SERRA ST AND PAMPAS LANE | COUNTY FILE NO:

GUP INFORMATION MAP

NORTH

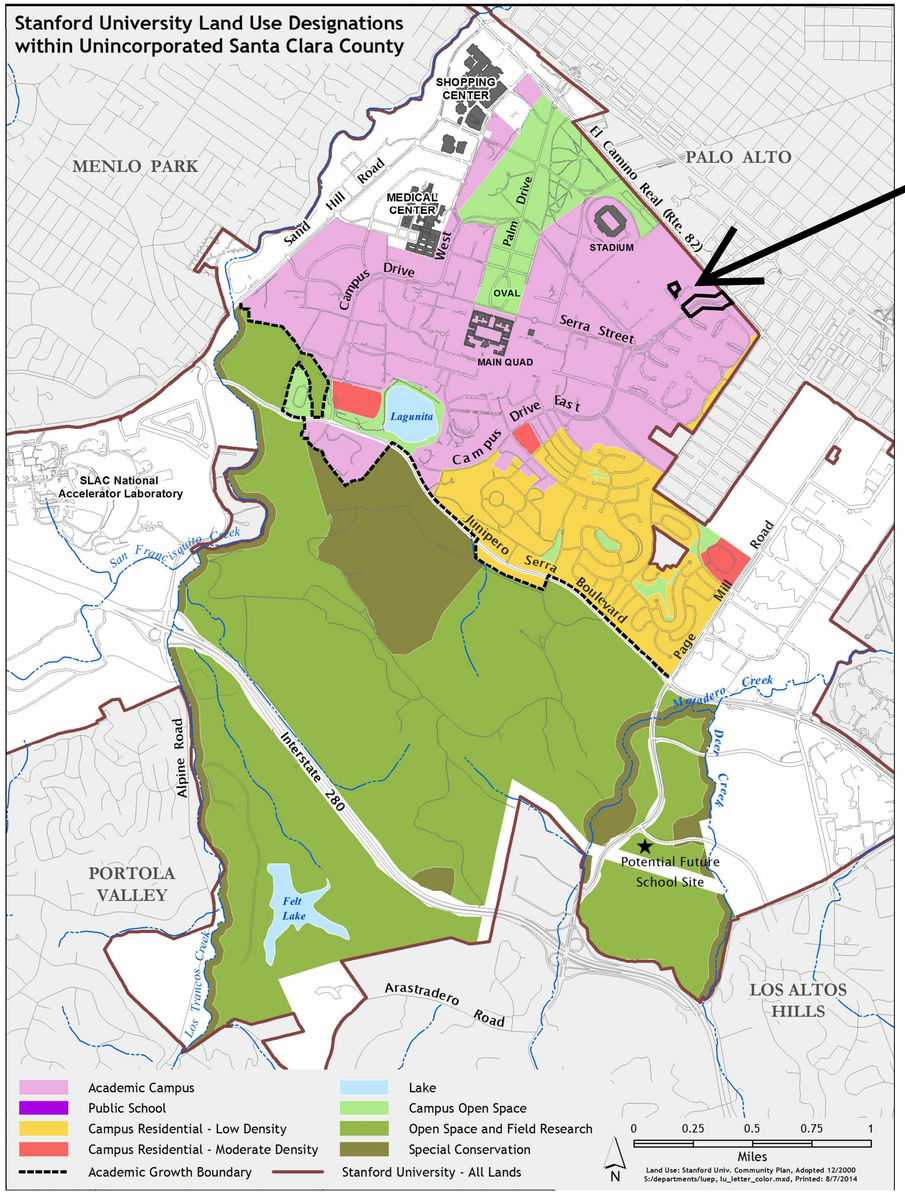

PROPOSED SITE

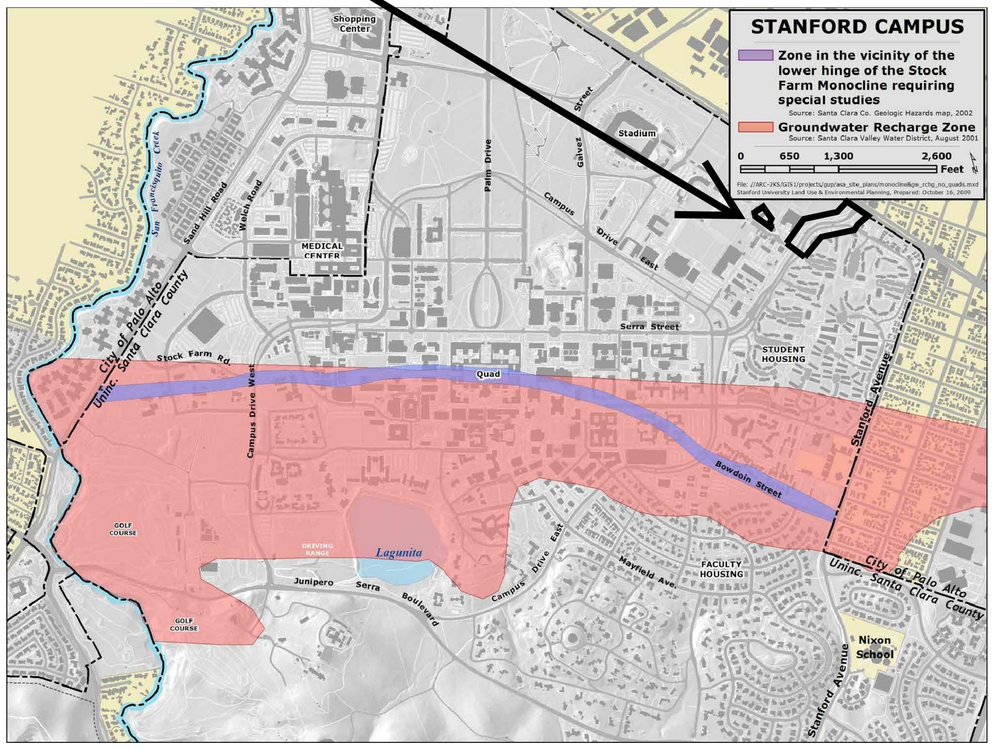

1730 N. FIRST STREET
SUITE 600
SAN JOSE, CA 95112
408-467-9100
408-467-9199 (FAX)

BKF ENGINEERS / SURVEYORS / PLANNERS

STANFORD UNIVERSITY
SERRA STREET – PAMPAS TO EL CAMINO REAL
GUP INFORMATION MAP
SANTA CLARA COUNTY CALIFORNIA
STANFORD

No.	Revisions

Date: 07/18/2023
Scale: AS SHOWN
Design: CU
Drawn: CU
Approved: DP
Job No: 20156102

Drawing Number:
PL1.1
OF

APPLICANT: STANFORD UNIVERSITY ROAD NAME: SERRA ST AND PAMPAS LANE COUNTY FILE NO:

EXISTING CONDITIONS

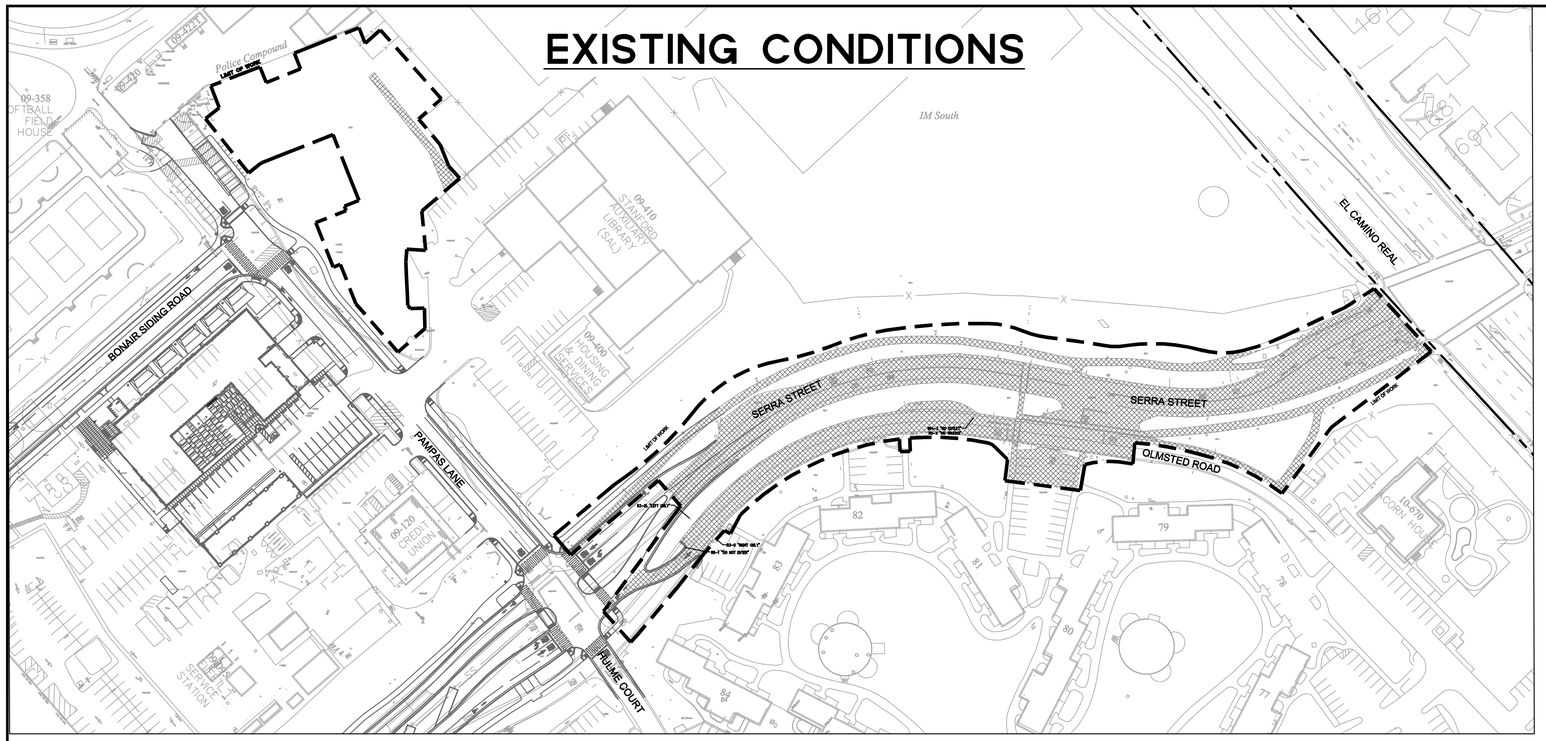

EXISTING CONDITIONS LEGEND

	IMPERVIOUS CONDITIONS	71,341 SF	1.64 ACRES
	PERVIOUS CONDITIONS	98,431 SF	2.26 ACRES

PROPOSED CONDITIONS

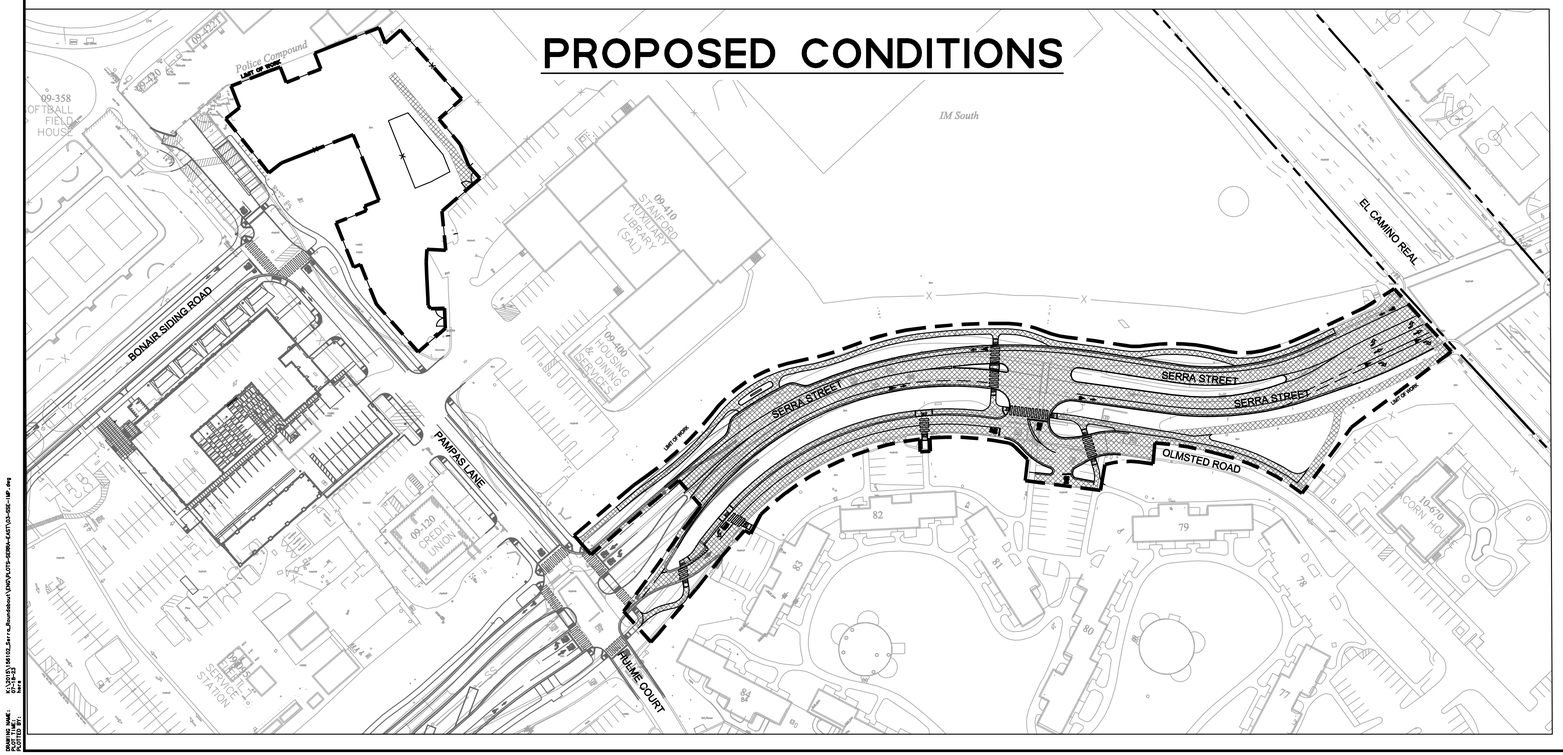

PROPOSED CONDITIONS LEGEND

	IMPERVIOUS CONDITIONS	74,431 SF	1.71 ACRES
	PERVIOUS CONDITIONS	95,341 SF	2.19 ACRES

GRAPHIC SCALE

80 0 40 80 160 320

(IN FEET)
1 inch = 80 ft.

BKF
ENGINEERS / SURVEYORS / PLANNERS
1730 N. FIRST STREET
SUITE 600
SAN JOSE, CA 95112
408-467-9100
408-467-9199 (FAX)

STANFORD UNIVERSITY
SERRA STREET – PAMPAS TO EL CAMINO REAL
IMPERVIOUS AREAS EXHIBIT
STANFORD — SANTA CLARA COUNTY — CALIFORNIA

Revisions

No.	

Date: 07/16/2023
Scale: 1"=80'
Design: CU
Drawn: CU
Approved: DP
Job No: 20156102

Drawing Number:
PL1.2
OF

DRAWING NAME: X:\2015\156102_Sri-La_Roadshow\UNO\PLOTS-SERRA-EXIST\D-SDC-IMP.dwg
PLOT SCALE: 1=1=2
PLOT DATE:

APPLICANT: STANFORD UNIVERSITY

ROAD NAME: SERRA ST AND PAMPAS LANE

COUNTY FILE NO:

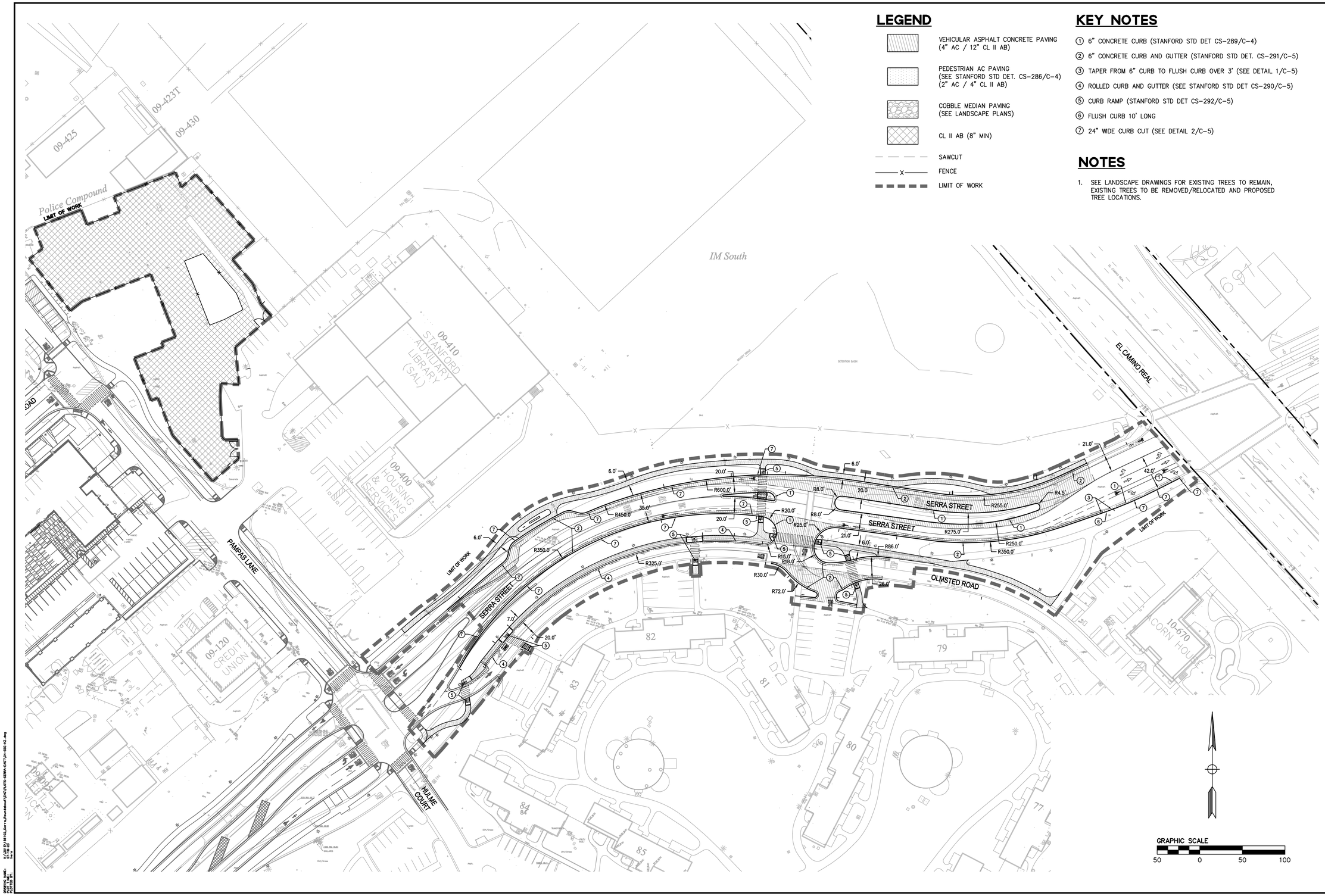

LEGEND

- VEHICULAR ASPHALT CONCRETE PAVING (4" AC / 12" CL II AB)
- PEDESTRIAN AC PAVING (SEE STANFORD STD DET. CS-286/C-4) (2" AC / 4" CL II AB)
- COBBLE MEDIAN PAVING (SEE LANDSCAPE PLANS)
- CL II AB (8" MIN)
- SAWCUT
- FENCE
- LIMIT OF WORK

KEY NOTES

1. 6" CONCRETE CURB (STANFORD STD DET CS-289/C-4)
2. 6" CONCRETE CURB AND GUTTER (STANFORD STD DET. CS-291/C-5)
3. TAPER FROM 6" CURB TO FLUSH CURB OVER 3' (SEE DETAIL 1/C-5)
4. ROLLED CURB AND GUTTER (SEE STANFORD STD DET CS-290/C-5)
5. CURB RAMP (STANFORD STD DET CS-292/C-5)
6. FLUSH CURB 10' LONG
7. 24" WIDE CURB CUT (SEE DETAIL 2/C-5)

NOTES

1. SEE LANDSCAPE DRAWINGS FOR EXISTING TREES TO REMAIN, EXISTING TREES TO BE REMOVED/RELOCATED AND PROPOSED TREE LOCATIONS.

1730 N. FIRST STREET
SUITE 600
SAN JOSE, CA 95112
408-467-9100
408-467-9199 (FAX)
BKF ENGINEERS / SURVEYORS / PLANNERS

STANFORD UNIVERSITY
SERRA STREET – PAMPAS TO EL CAMINO REAL
ASA SITE PLAN
SANTA CLARA COUNTY CALIFORNIA

STANFORD

No.	Revisions

Date: 07/18/2023
Scale: 1"=50'
Design: CU
Drawn: CU
Approved: DP
Job No: 20156102

Drawing Number:
C-1
OF

DRAWING NAME: X:\20156102\Site\Sheetsets\CONCEPTS-SERRA-EAST\A-SSE-HC.dwg
PLOT DATE: 07/18/2023
PLOT TIME: 9:41

APPLICANT: STANFORD UNIVERSITY ROAD NAME: SERRA ST AND PAMPAS LANE COUNTY FILE NO:

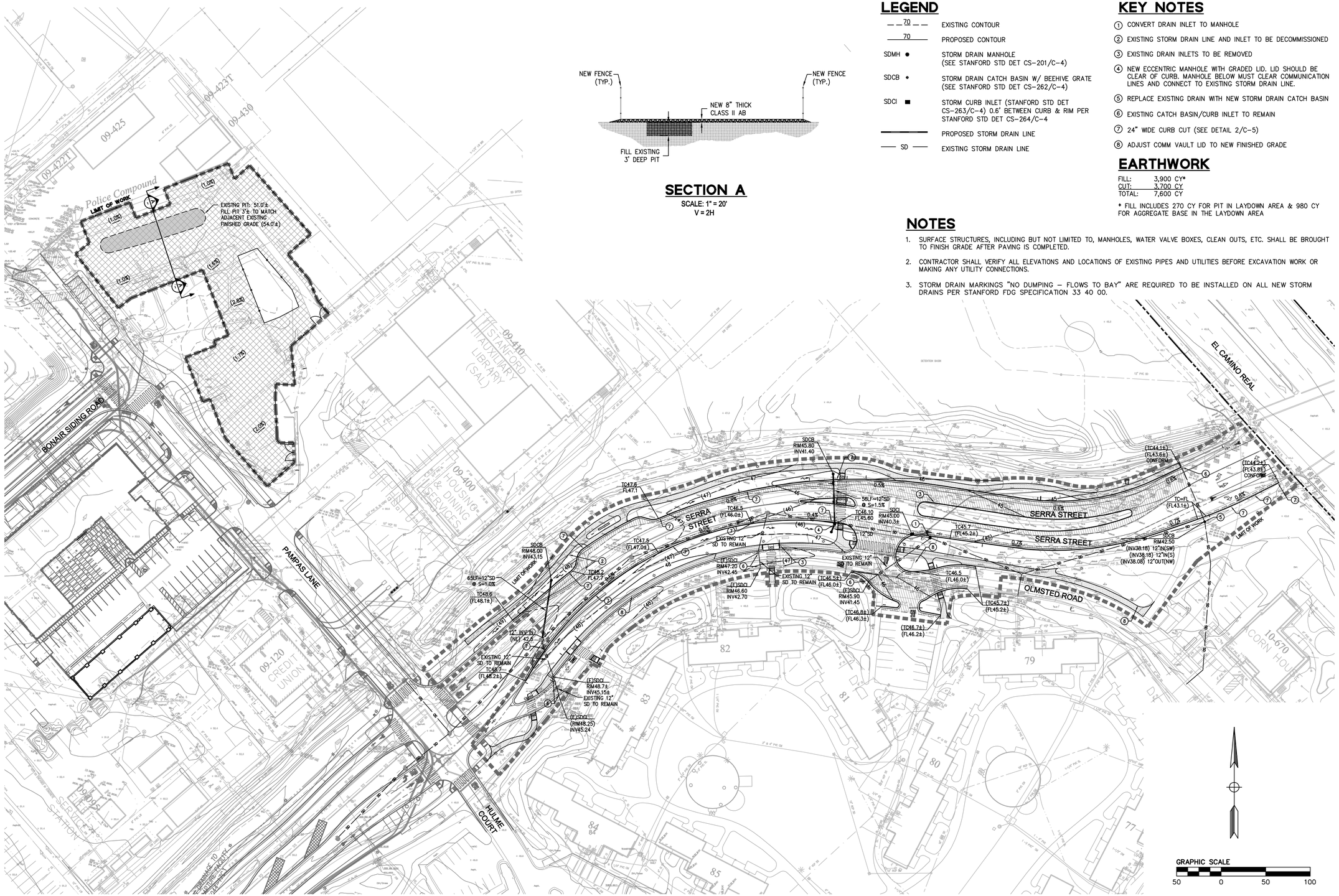

SECTION A

SCALE: 1" = 20'
V = 2H

LEGEND

70	EXISTING CONTOUR
70	PROPOSED CONTOUR
SDMH ●	STORM DRAIN MANHOLE (SEE STANFORD STD DET CS-201/C-4)
SDCB ●	STORM DRAIN CATCH BASIN W/ BEEHIVE GRATE (SEE STANFORD STD DET CS-262/C-4)
SDCI ■	STORM CURB INLET (STANFORD STD DET CS-263/C-4) 0.6' BETWEEN CURB & RIM PER STANFORD STD DET CS-264/C-4
———	PROPOSED STORM DRAIN LINE
— SD —	EXISTING STORM DRAIN LINE

KEY NOTES

1. CONVERT DRAIN INLET TO MANHOLE
2. EXISTING STORM DRAIN LINE AND INLET TO BE DECOMMISSIONED
3. EXISTING DRAIN INLETS TO BE REMOVED
4. NEW ECCENTRIC MANHOLE WITH GRADED LID. LID SHOULD BE CLEAR OF CURB. MANHOLE BELOW MUST CLEAR COMMUNICATION LINES AND CONNECT TO EXISTING STORM DRAIN LINE.
5. REPLACE EXISTING DRAIN WITH NEW STORM DRAIN CATCH BASIN
6. EXISTING CATCH BASIN/CURB INLET TO REMAIN
7. 24" WIDE CURB CUT (SEE DETAIL 2/C-5)
8. ADJUST COMM VAULT LID TO NEW FINISHED GRADE

EARTHWORK

FILL:	3,900 CY*
CUT:	3,700 CY
TOTAL:	7,600 CY

* FILL INCLUDES 270 CY FOR PIT IN LAYDOWN AREA & 980 CY FOR AGGREGATE BASE IN THE LAYDOWN AREA

NOTES

1. SURFACE STRUCTURES, INCLUDING BUT NOT LIMITED TO, MANHOLES, WATER VALVE BOXES, CLEAN OUTS, ETC. SHALL BE BROUGHT TO FINISH GRADE AFTER PAVING IS COMPLETED.
2. CONTRACTOR SHALL VERIFY ALL ELEVATIONS AND LOCATIONS OF EXISTING PIPES AND UTILITIES BEFORE EXCAVATION WORK OR MAKING ANY UTILITY CONNECTIONS.
3. STORM DRAIN MARKINGS "NO DUMPING – FLOWS TO BAY" ARE REQUIRED TO BE INSTALLED ON ALL NEW STORM DRAINS PER STANFORD FDG SPECIFICATION 33 40 00.

1730 N. FIRST STREET
SUITE 600
SAN JOSE, CA 95112
408-467-9100
408-467-9199 (FAX)
BKF
ENGINEERS / SURVEYORS / PLANNERS

STANFORD UNIVERSITY
SERRA STREET – PAMPAS TO EL CAMINO REAL
ASA GRADING AND UTILITY PLAN

STANFORD — SANTA CLARA COUNTY — CALIFORNIA

No.	Revisions

Date: 07/18/2023
Scale: 1"=50'
Design: CU
Drawn: CU
Approved: DP
Job No: 20156102

Drawing Number:
C-2
OF

DRAWING NAME: K:\20156102_Serra_Bonair&Hulme\CIVIL\CITY-SUBMIT-CASE\C-02-GDE-02.dwg
PLOT SCALE: 1=1
PLOT TIME: 07:11:19 PM

APPLICANT: STANFORD UNIVERSITY ROAD NAME: SERRA ST AND PAMPAS LANE COUNTY FILE NO:

STORMWATER TREATMENT SUMMARY

TRIBUTARY AREA	AREA SIZE (SF)	PERVIOUS AREA (SF)	IMPERVIOUS AREA						NEW/REPLACED IMPERVIOUS AREA (SF) ROUTED TO EAST CAMPUS STORMWATER CAPTURE FACILITY (COUNTY PROJECT NUMBER: 11044-17C3) (SEPARATE PROJECT)	EXISTING TO REMAIN IMPERVIOUS AREA (SF) ROUTED TO EAST CAMPUS STORMWATER CAPTURE FACILITY (COUNTY PROJECT NUMBER: 11044-17C3) (SEPARATE PROJECT)	NEW/REPLACED IMPERVIOUS AREA (SF) REQUIRING IN-LIEU CREDITS FROM EAST CAMPUS STORMWATER CAPTURE FACILITY (COUNTY PROJECT NUMBER: 11044-17C3) (SEPARATE PROJECT)
			VEHICULAR			NON-VEHICULAR					
			EXISTING TO REMAIN (SF)	NEW/REPLACED (SF)	TOTAL (SF)	EXISTING TO REMAIN (SF)	NEW/REPLACED (SF)	TOTAL (SF)			
A-1	8,557	4,890	1,074	1,183	2,257	359	1,051	1,410	2,234	1,433	0
A-2	5,940	3,534	1,480	82	1,562	144	700	844	782	1,624	0
A-3	54,103	19,537	25,518	4,522	30,040	653	3,873	4,526	0	0	8,395
A-4	59,691	27,299	8,934	14,600	23,534	1,408	7,450	8,858	0	0	22,050
A-5	41,481	40,081	0	0	0	1,400	0	1,400	0	1,400	0
TOTAL	169,772	95,341	37,006	20,387	57,393	3,964	13,074	17,038	3,016	4,457	30,445

LEGEND

- TRIBUTARY AREA

EXISTING
- STORM DRAIN LINE TO CAPTURE FACILITY
- STORM DRAIN LINE NOT ROUTED TO CAPTURE FACILITY
- DITCH

PROPOSED
- STORM DRAIN LATERAL TO CAPTURE FACILITY
- STORM DRAIN LATERAL NOT ROUTED TO CAPTURE FACILITY
- NEW/REPLACED VEHICULAR IMPERVIOUS AREA
- NEW/REPLACED NON-VEHICULAR IMPERVIOUS AREA
- EXISTING VEHICULAR IMPERVIOUS AREA TO REMAIN
- EXISTING NON-VEHICULAR IMPERVIOUS AREA TO REMAIN

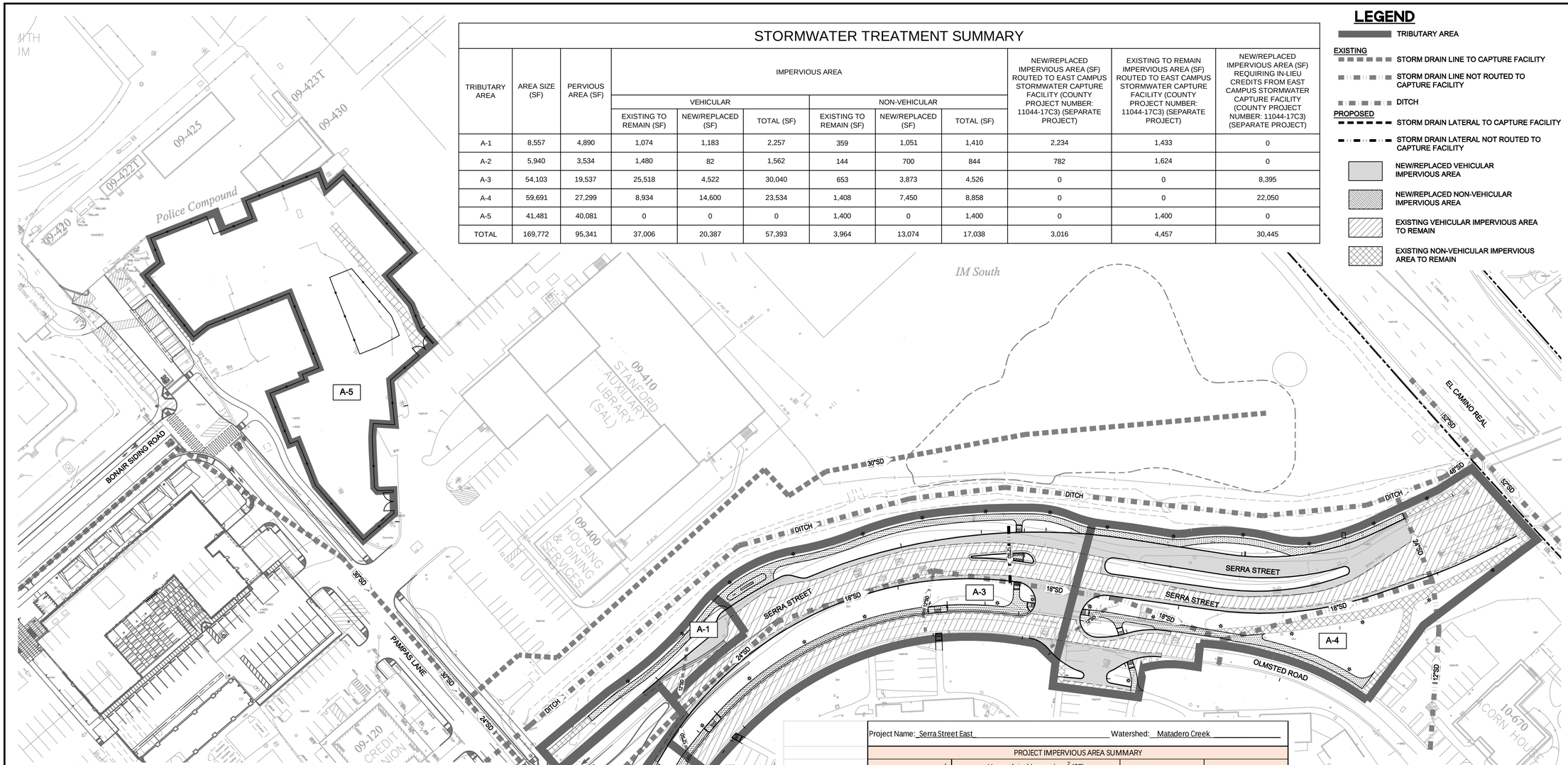

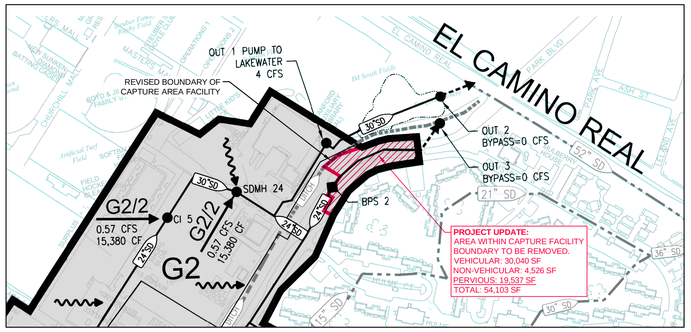

EAST CAMPUS STORMWATER CAPTURE FACILITY VICINITY MAP

SCALE: 1" = 300'

Project Name: Serra Street East			Watershed: Matadero Creek	
PROJECT IMPERVIOUS AREA SUMMARY				
	Regulated Impervious[1] (SF)	Unregulated Impervious[2] (SF)		Pervious area	Total Project Area
		Vehicular	Non-Vehicular		
Existing	0	3,680	3,548	48,750	55,978
Proposed	7,473	0	0	48,505	55,978
As-built					

	Vehicular (SF)	Non-Vehicular (SF)
In-Lieu Credit Used[3] (SF)	19,122	11,323
As-Built In-Lieu Credit Used[3] (SF)	0	0

1. Regulated Impervious is all new or replaced impervious areas required to be treated per MRP section C.3. It also inculdes existing impervious area already requiring treatment or existing impervious area that is required to be treated under the 50% rule.

2. Unregulated Impervious is existing impervious that is not required to be treated per MRP section C.3. It also includes new impervious area that is not required to be treated per MRP section C.3.

3. In-Lieu Credit Used is the portion of regulated imprevious that is meeting MRP section C.3 using in-lieu credits from regional stormwater treatment facilities.

GRAPHIC SCALE

50 0 25 50 100 200

(IN FEET)
1 inch = 50 ft.

1730 N. FIRST STREET
SUITE 600
SAN JOSE, CA 95112
408-467-9100
408-467-9199 (FAX)

BKF ENGINEERS / SURVEYORS / PLANNERS

STANFORD UNIVERSITY
SERRA STREET – PAMPAS TO EL CAMINO REAL
ASA STORMWATER TREATMENT PLAN

STANFORD — SANTA CLARA COUNTY — CALIFORNIA

No.	Revisions

Date: 07/18/2023
Scale: 1"=50'
Design: CU
Drawn: CU
Approved: DP
Job No: 20156102

Drawing Number:
C-3
OF

DRAWING NAME: E:\2015\20156102_Serra_Bonair\CIVIL\CITE-SERRA-EAST\C-3B-SSC-06.dwg
PLOT TIME: 8:21:16
PLOT SCALE: 1:1

APPLICANT: STANFORD UNIVERSITY

ROAD NAME: SERRA ST AND PAMPAS LANE

COUNTY FILE NO:

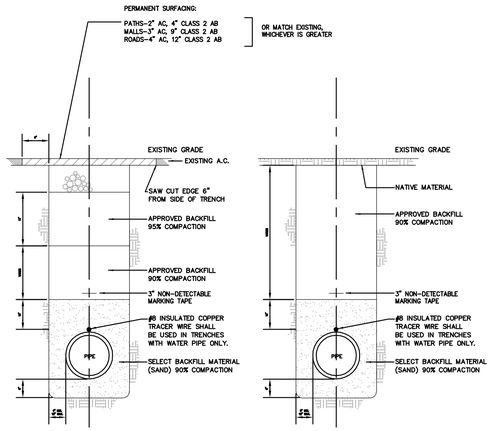

PAVED

UNIMPROVED LANDSCAPE

NOTES:
1. SHORING TO BE PER CAL/OSHA CONSTRUCTION SAFETY ORDERS.
2. RESTORE ALL PAVEMENT MARKINGS IN-KIND WHERE REMOVED AS PART OF TRENCHING OPERATIONS

STANFORD UNIVERSITY FACILITY OPERATIONS				DWG.
Drawing Title: TRENCH BACKFILL AND SURFACE RESTORATION				CS-191
Scale: NTS	Check: T. Leong	Rev. By: OG	Rev. Date: 12/01/16	

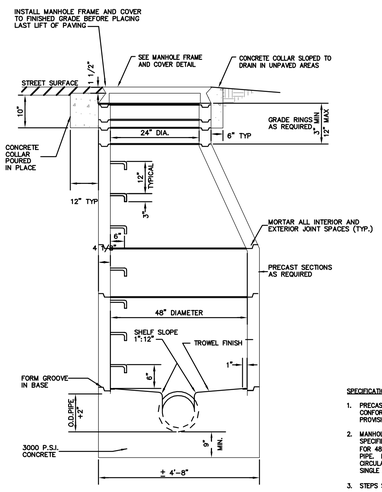

SPECIFICATIONS
1. PRECAST M.H. SECTIONS SHALL CONFORM TO APPLICABLE PROVISIONS OF ASTM C76-59T.
2. MANHOLE SECTIONS SHALL BE AS SPECIFIED IN TABLE II, WALL A, FOR 48" REINFORCED CONCRETE PIPE. REINFORCING SHALL BE CIRCULAR AS SPECIFIED FOR SINGLE CURTAIN.
3. STEPS SHALL BE 14" WIDE
4. FOR MANHOLE BASES SEE CS-203.

STANFORD UNIVERSITY FACILITY OPERATIONS				DWG.
Drawing Title: SANITARY SEWER AND STORM DRAIN				CS-201
Scale: NTS	Check: STEVE BUI	Rev. By: OG	Rev. Date: 01/24/17	

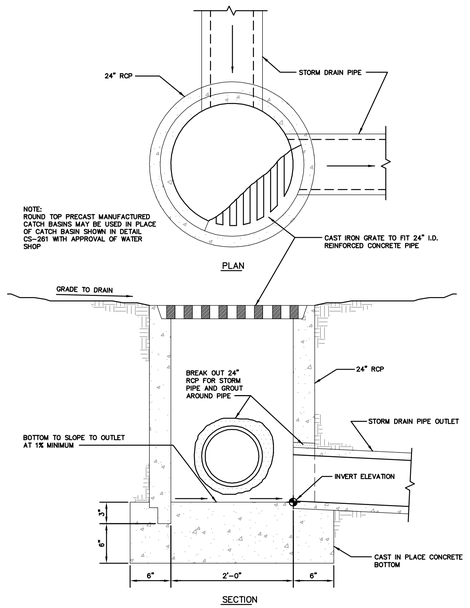

SECTION

STANFORD UNIVERSITY FACILITY OPERATIONS				DWG.
Drawing Title: CATCH BASIN WITH ROUND BASE				CS-262
Scale: NTS	Check: KTS	Rev. By: OG	Rev. Date: 01/09	

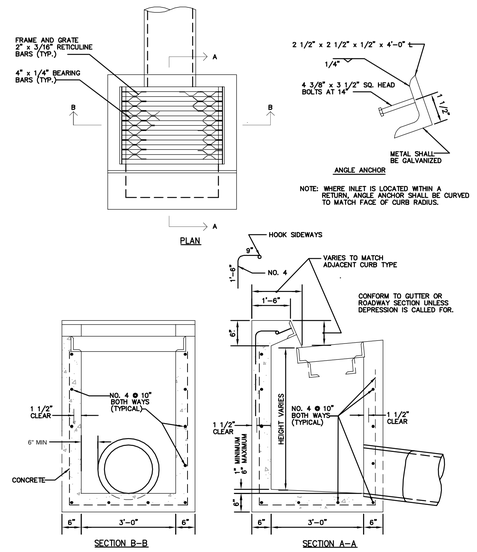

NOTE:
PRE-CAST CATCH BASINS SUBJECT TO APPROVAL OF STANFORD WATER DEPARTMENT.

STANFORD UNIVERSITY FACILITY OPERATIONS				DWG.
Drawing Title: STANFORD CURB INLET				CS-263
Scale: NTS	Check: KTS	Rev. By: OG	Rev. Date: 03/04/2020	

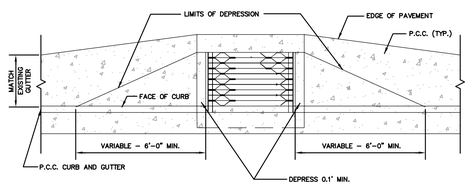

PLAN VIEW

STANFORD UNIVERSITY FACILITY OPERATIONS				DWG.
Drawing Title: P.C.C. GUTTER DEPRESSION				CS-264
Scale: NTS	Check: KTS	Rev. By: OG	Rev. Date: 03/04/2020	

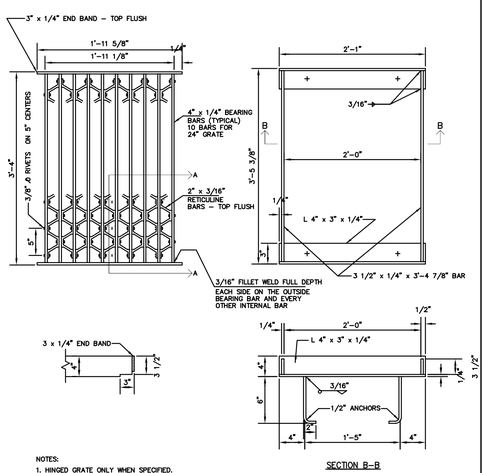

SECTION B–B

NOTES:
1. HINGED GRATE ONLY WHEN SPECIFIED.
2. PLACE GRATE BARS PARALLEL TO FLOW.
3. FRAME, GRATE AND ANCHORS SHALL BE GALVANIZED AFTER FABRICATION.
4. FRAME AND GRATE TO BE WELDED STEEL OR WRITTEN APPROVED ALTERNATIVE.

STANFORD UNIVERSITY FACILITY OPERATIONS				DWG.
Drawing Title: RETICULINE FRAME AND GRATE				CS-265
Scale: NTS	Check: KTS	Rev. By: OG	Rev. Date: 03/04/2020	

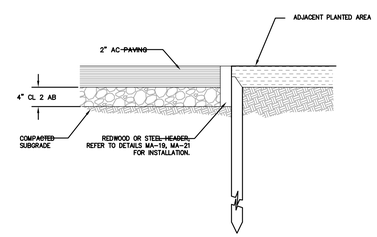

NOTE:
1. FOR SIDEWALK REPAIRS – AREA TO BE REPLACED SHALL BE SAWCUT PRIOR TO REMOVAL.
2. SUBGRADE AND AGGREGATE BASE SHALL BE COMPACTED TO 95%.
3. ASPHALT CONCRETE SHALL BE TYPE 3/ MEDIUM
4. AGGREGATE BASE SHALL BE CLASS 2.
5. REDWOOD HEADERS ARE STANDARD ON BOTH SIDES OF THE SIDEWALK, UNLESS ONE SIDE IS AGAINST THE CONCRETE CURB.
6. MATCH WIDTH OF EXISTING SIDEWALK (MINIMUM 4'.)
7. TYPICAL SIDEWALK CROSS-SLOPE IS 2% TOWARDS THE STREET.

STANFORD UNIVERSITY FACILITY OPERATIONS				DWG.
Drawing Title: ASPHALT SIDEWALK				CS-286
Scale: NTS	Check: STEVE BUI	Rev. By: O.G	Rev. Date: 03/05/2020	

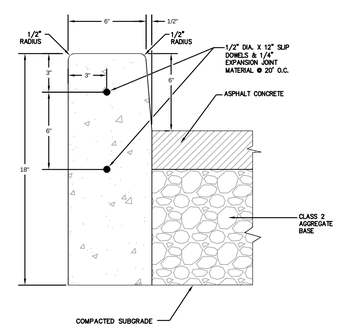

CONCRETE CURB (6")

NOTE:
1. ALL EXPOSED CONCRETE EDGES (HORIZONTAL AND VERTICAL) SHALL BE 1/2" RADIUS

STANFORD UNIVERSITY FACILITY OPERATIONS				DWG.
Drawing Title: CONCRETE CURB (6")				CS-289
Scale: NTS	Check: Tom Z.	Rev. By: O.G.	Rev. Date: 03/05/2020	

BKF ENGINEERS / SURVEYORS / PLANNERS
1730 N. FIRST STREET
SUITE 600
SAN JOSE, CA 95112
408-467-9100
408-467-9199 (FAX)

STANFORD UNIVERSITY
SERRA STREET – PAMPAS TO EL CAMINO REAL
ASA DETAILS
SANTA CLARA COUNTY CALIFORNIA
STANFORD

Revisions | No.

Date: 07/16/2023
Scale:
Design: CU
Drawn: CU
Approved: DP
Job No: 20156102

Drawing Number:
C-4
OF

DRAWING NAME: K:\20201\156102.Sri-Ca_Foundation\UNIQ\CUTS-SERRA-CAST\CP-SSE-01.dwg
PLOT DATE: 6-14-23
PLOTTED BY: Tom Zeller

APPLICANT: STANFORD UNIVERSITY

ROAD NAME: SERRA ST AND PAMPAS LANE

COUNTY FILE NO:

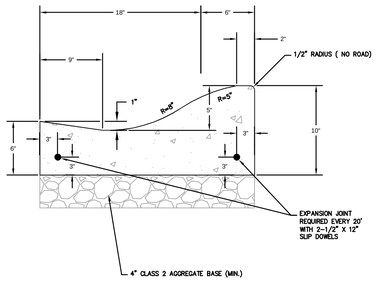

ROLLED CURB AND GUTTER

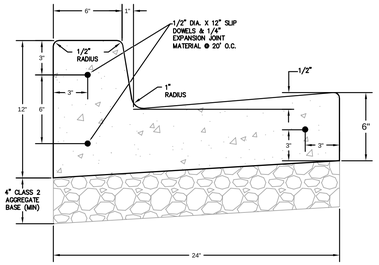

CONCRETE CURB AND GUTTER

NOTE:
1. ALL EXPOSED CONCRETE EDGES (HORIZONTAL AND VERTICAL) SHALL BE 1/2" RADIUS

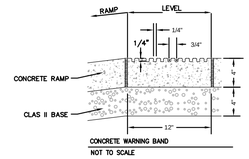

NOT TO SCALE

NOTES:
1. TRUNCATED DOME PAVERS SHALL BE TEK-WAY DOME TILES, COLOR "STANFORD BLACK", 24" X 36" STANDARD, 2.35" O.C. DOME SPACING, IN LINE PATTERN.STRONG-GO INDUSTRIES, TUCSON, AZ WWW.STRONGGO.COM
2. FOR NEW INSTALLATIONS, "WET SET" AND "THIN SET" METHODS ARE VIABLE, THOUGH WET-SETTING IS PREFERRED. CONTRACTOR TO REFER TO MANUFACTURER SPECIFICATIONS AND ADHERE TO RECOMMENDATIONS UNLESS OTHERWISE APPROVED.
3. DETECTABLE WARNING SURFACES SHALL CONTRAST VISUALLY WITH ADJACENT PATHWAY PAVING SURFACE

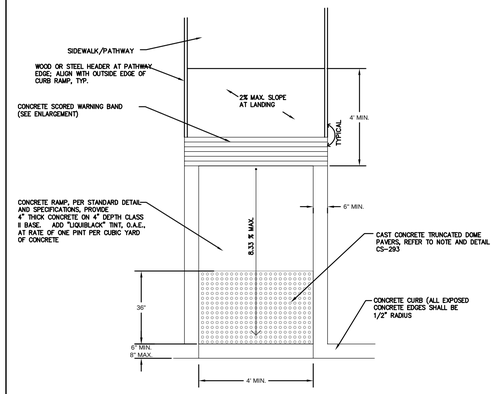

SHEET 1 OF 3

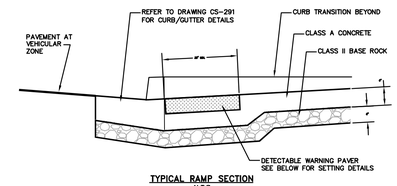

TYPICAL RAMP SECTION
N.T.S.

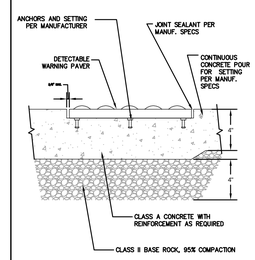

WET SET SECTION
N.T.S.

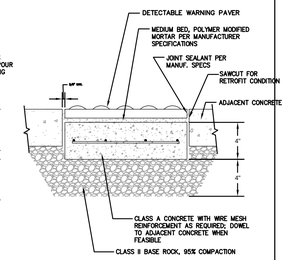

RETROFIT / THIN SET SECTION
N.T.S.

NOTES:
1. TRUNCATED DOME PAVERS SHALL BE TEK-WAY DOME TILES, COLOR "STANFORD BLACK", 24" X 36" STANDARD, 2.35" O.C. DOME SPACING, FROM STRONG-GO INDUSTRIES, 3296 E. HEMISPHERE LOOP, TUCSON, AZ 85706; WWW.STRONGGO.COM; (866) 439-3216
2. FOR NEW INSTALLATIONS, "WET SET" AND "THIN SET" METHODS ARE VIABLE, THOUGH WET-SETTING IS PREFERRED. CONTRACTOR TO REFER TO MANUFACTURER SPECIFICATIONS AND ADHERE TO RECOMMENDATIONS UNLESS OTHERWISE APPROVED).
3. FOR RETROFIT OF EXISTING RAMP, SAWCUT CONCRETE WITH NO OVERCUTS AND INSTALL PER DETAIL AND MANUFACTURER'S SPECIFICATIONS
2. JOINT SEALANT COLOR SHALL MATCH ADJACENT CONCRETE JOINTS WHENEVER POSSIBLE

STANFORD UNIVERSITY FACILITY OPERATIONS				DWG.
Drawing Title: ROLLED CURB AND GUTTER				CS-290
Scale: NTS	Check: T. Leong	Rev. By: O.G.	Rev. Date:03/05/2020	

STANFORD UNIVERSITY FACILITY OPERATIONS				DWG.
Drawing Title: CONCRETE CURB AND GUTTER				CS-291
Scale: NTS	Check: Tom Z.	Rev. By: O.G.	Rev. Date:03/05/2020	

STANFORD UNIVERSITY FACILITY OPERATIONS				DWG.
Drawing Title: STRAIGHT ADA RAMP WITH DETECTABLE WARNING PAVER				CS-292
Scale: NTS	Check: Drew B.	Rev. By: D.B.	Rev. Date:03/05/2020	

STANFORD UNIVERSITY FACILITY OPERATIONS				DWG.
Drawing Title: DETECTABLE WARNING PAVER INSTALLATION DETAIL				CS-293
Scale: NTS	Check: Drew B.	Rev. By: D.B.	Rev. Date:03/05/2020	

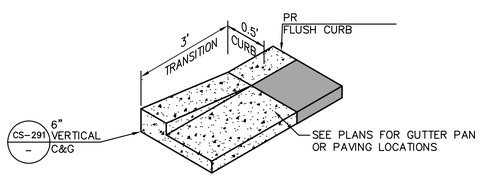

1 - TAPER FROM 6" CURB TO FLUSH CURB OVER 3'
N.T.S.

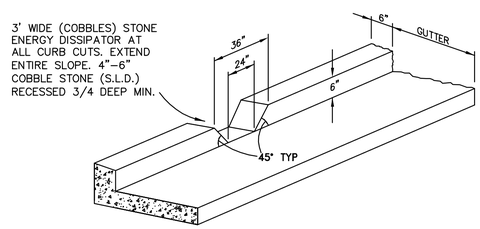

2 - CURB OPENING (CURB CUT) DETAIL
N.T.S.

BKF
ENGINEERS / SURVEYORS / PLANNERS
1730 N. FIRST STREET
SUITE 600
SAN JOSE, CA 95112
408-467-9100
408-467-9199 (FAX)

STANFORD UNIVERSITY
SERRA STREET - PAMPAS TO EL CAMINO REAL
ASA DETAILS
SANTA CLARA COUNTY CALIFORNIA
STANFORD

Revisions
No.

Date: 07/18/2023
Scale:
Design: CU
Drawn: CU
Approved: DP
Job No: 20156102

Drawing Number:
C-5
OF

DRAWING NAME: K:\20156102_Serra_Pampas\CIVIL\CUTS-SERRA-CAD\CP-SERC-01.dwg
PLOT DATE: 07-18-23
PLOT TIME:
PLOTTED BY:

APPLICANT: STANFORD UNIVERSITY ROAD NAME: SERRA ST AND PAMPAS LANE COUNTY FILE NO:

GENERAL NOTES

1. THE CONTRACTOR SHALL DETERMINE THE LOCATION OF ANY EXISTING UNDERGROUND UTILITIES PRIOR TO DRILLING.
2. EXACT LOCATION AND POSITION OF ROADSIDE SIGNS TO BE DETERMINED IN THE FIELD BY THE ENGINEER.
3. ALL SIGNS ARE BASED ON THE 2014 CALIFORNIA MUTCD.
4. ALL EXISTING PAVEMENT DELINEATION IN CONFLICT WITH THESES PLANS SHALL BE REMOVED BY CONTRACTOR.
5. EXACT LOCATION AND POSITION OF PAVEMENT MARKING ARROWS TO BE DETERMINED IN THE FIELD BY THE ENGINEER.
6. ALL STRIPING AND PAVEMENT MARKINGS SHALL BE THERMOPLASTIC UNLESS OTHERWISE NOTED.
7. REMOVAL OF EXISTING PAVEMENT MARKINGS SHALL BE BY LIGHT SURFACE GRINDING AND APPLICATION OF DOUBLE SEAL COAT.
8. BIKE LANE PAVEMENT MARKINGS TO BE PAINT (NOT THERMOPLASTIC).
9. CROSSWALK BARS SHALL BE PARALLEL TO DIRECTION OF TRAVEL LANE CENTERLINE.

LEGEND

- EXISTING SIGNS TO REMAIN
- REMOVE ROADSIDE SIGN
- RELOCATE EXISTING ROADSIDE SIGN
- PROPOSED ONE POST SIGN LOCATION
- PROPOSED TWO POST SIGN LOCATION
- EXISTING ONE POST SIGN LOCATION
- EXISTING TWO POST SIGN LOCATION
- No. PAVEMENT DELINEATION DETAIL NUMBER
- INSTALL PAVEMENT MARKING
- CHANGE OF PAVEMENT DELINEATION DETAIL

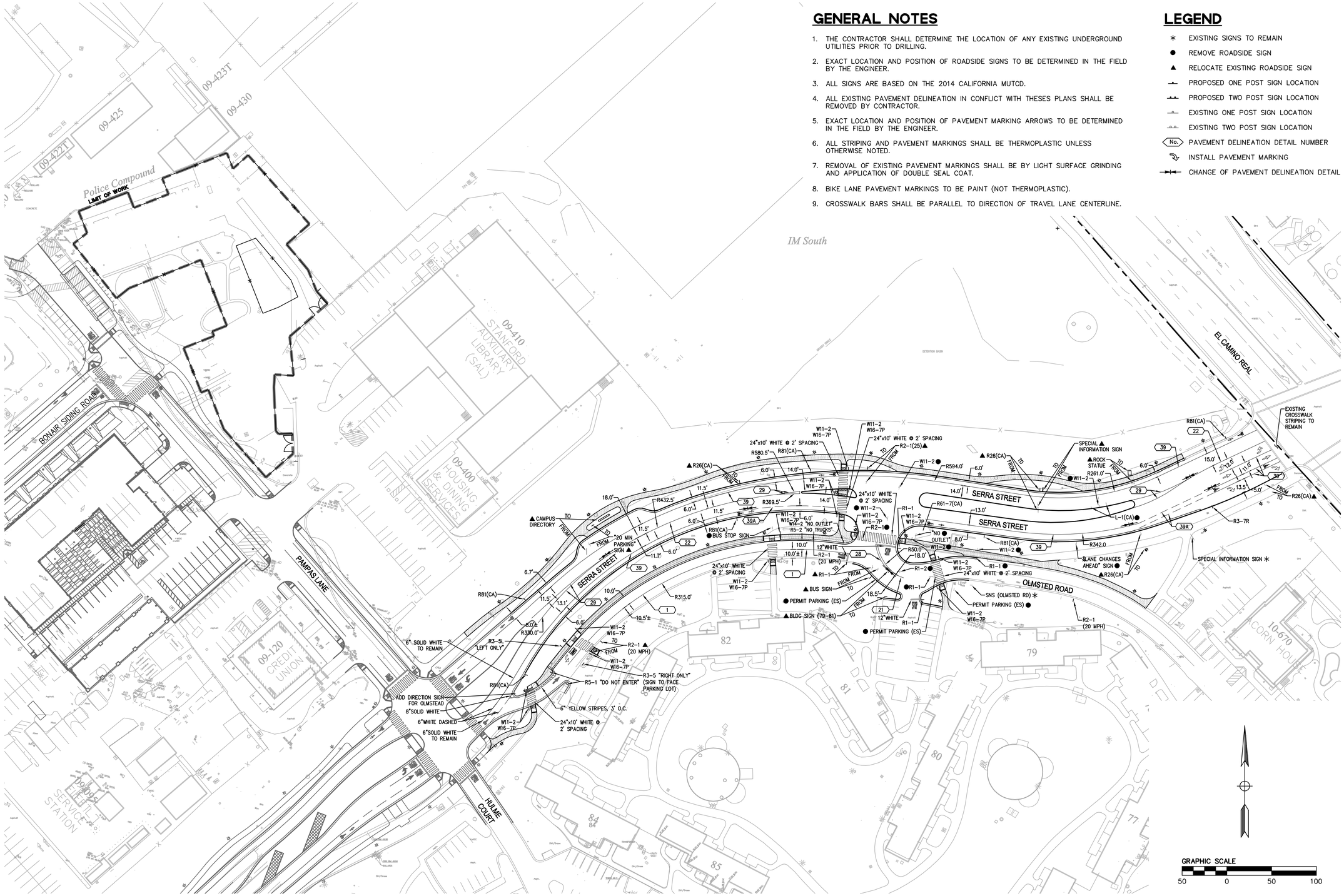

1730 N. FIRST STREET
SUITE 600
SAN JOSE, CA 95112
408-467-9100
408-467-9199 (FAX)

BKF
ENGINEERS / SURVEYORS / PLANNERS

STANFORD UNIVERSITY
SERRA STREET – PAMPAS TO EL CAMINO REAL
ASA SIGNING AND STRIPING PLAN

STANFORD — SANTA CLARA COUNTY — CALIFORNIA

No.	Revisions

Date: 07/18/2023
Scale: 1"=50'
Design: CU
Drawn: CU
Approved: DP
Job No: 20156102

Drawing Number:
C-6
OF

DRAWING NAME: K:\2015\156102-Sv-r-c_Bundoksa\1300\PLOTS-SERRA-EAST\C6-GSE-03.dwg
PLOT TIME: 07:14:53
PLOT BY: Dan Pham

APPLICANT: STANFORD UNIVERSITY ROAD NAME: SERRA ST AND PAMPAS LANE COUNTY FILE NO:

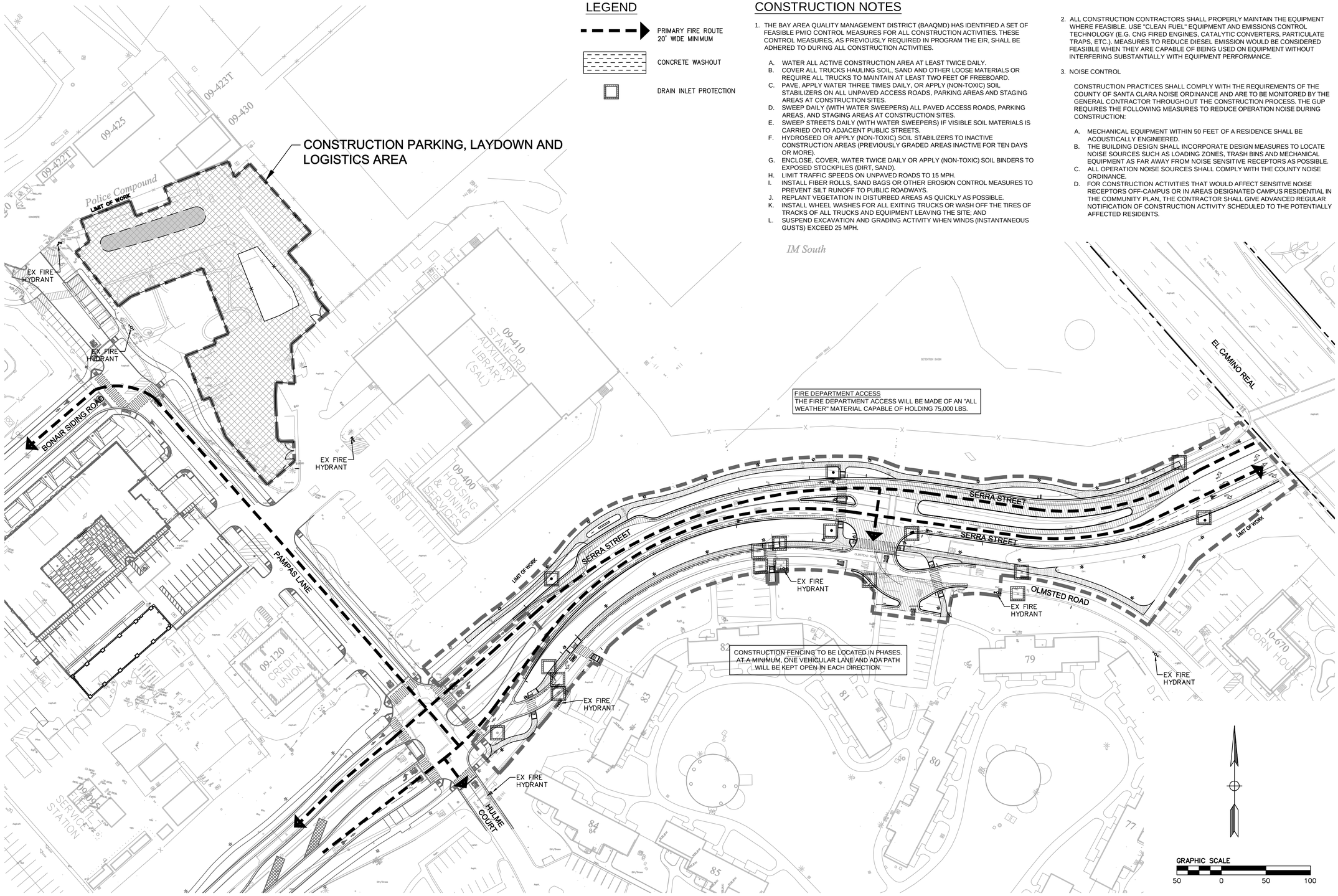

LEGEND

- PRIMARY FIRE ROUTE 20' WIDE MINIMUM
- CONCRETE WASHOUT
- DRAIN INLET PROTECTION

CONSTRUCTION NOTES

1. THE BAY AREA QUALITY MANAGEMENT DISTRICT (BAAQMD) HAS IDENTIFIED A SET OF FEASIBLE PMIO CONTROL MEASURES FOR ALL CONSTRUCTION ACTIVITIES. THESE CONTROL MEASURES, AS PREVIOUSLY REQUIRED IN PROGRAM THE EIR, SHALL BE ADHERED TO DURING ALL CONSTRUCTION ACTIVITIES.

   A. WATER ALL ACTIVE CONSTRUCTION AREA AT LEAST TWICE DAILY.
   B. COVER ALL TRUCKS HAULING SOIL, SAND AND OTHER LOOSE MATERIALS OR REQUIRE ALL TRUCKS TO MAINTAIN AT LEAST TWO FEET OF FREEBOARD.
   C. PAVE, APPLY WATER THREE TIMES DAILY, OR APPLY (NON-TOXIC) SOIL STABILIZERS ON ALL UNPAVED ACCESS ROADS, PARKING AREAS AND STAGING AREAS AT CONSTRUCTION SITES.
   D. SWEEP DAILY (WITH WATER SWEEPERS) ALL PAVED ACCESS ROADS, PARKING AREAS, AND STAGING AREAS AT CONSTRUCTION SITES.
   E. SWEEP STREETS DAILY (WITH WATER SWEEPERS) IF VISIBLE SOIL MATERIALS IS CARRIED ONTO ADJACENT PUBLIC STREETS.
   F. HYDROSEED OR APPLY (NON-TOXIC) SOIL STABILIZERS TO INACTIVE CONSTRUCTION AREAS (PREVIOUSLY GRADED AREAS INACTIVE FOR TEN DAYS OR MORE).
   G. ENCLOSE, COVER, WATER TWICE DAILY OR APPLY (NON-TOXIC) SOIL BINDERS TO EXPOSED STOCKPILES (DIRT, SAND).
   H. LIMIT TRAFFIC SPEEDS ON UNPAVED ROADS TO 15 MPH.
   I. INSTALL FIBER ROLLS, SAND BAGS OR OTHER EROSION CONTROL MEASURES TO PREVENT SILT RUNOFF TO PUBLIC ROADWAYS.
   J. REPLANT VEGETATION IN DISTURBED AREAS AS QUICKLY AS POSSIBLE.
   K. INSTALL WHEEL WASHES FOR ALL EXITING TRUCKS OR WASH OFF THE TIRES OF TRACKS OF ALL TRUCKS AND EQUIPMENT LEAVING THE SITE; AND
   L. SUSPEND EXCAVATION AND GRADING ACTIVITY WHEN WINDS (INSTANTANEOUS GUSTS) EXCEED 25 MPH.

2. ALL CONSTRUCTION CONTRACTORS SHALL PROPERLY MAINTAIN THE EQUIPMENT WHERE FEASIBLE. USE "CLEAN FUEL" EQUIPMENT AND EMISSIONS CONTROL TECHNOLOGY (E.G. CNG FIRED ENGINES, CATALYTIC CONVERTERS, PARTICULATE TRAPS, ETC.). MEASURES TO REDUCE DIESEL EMISSION WOULD BE CONSIDERED FEASIBLE WHEN THEY ARE CAPABLE OF BEING USED ON EQUIPMENT WITHOUT INTERFERING SUBSTANTIALLY WITH EQUIPMENT PERFORMANCE.

3. NOISE CONTROL

   CONSTRUCTION PRACTICES SHALL COMPLY WITH THE REQUIREMENTS OF THE COUNTY OF SANTA CLARA NOISE ORDINANCE AND ARE TO BE MONITORED BY THE GENERAL CONTRACTOR THROUGHOUT THE CONSTRUCTION PROCESS. THE GUP REQUIRES THE FOLLOWING MEASURES TO REDUCE OPERATION NOISE DURING CONSTRUCTION:

   A. MECHANICAL EQUIPMENT WITHIN 50 FEET OF A RESIDENCE SHALL BE ACOUSTICALLY ENGINEERED.
   B. THE BUILDING DESIGN SHALL INCORPORATE DESIGN MEASURES TO LOCATE NOISE SOURCES SUCH AS LOADING ZONES, TRASH BINS AND MECHANICAL EQUIPMENT AS FAR AWAY FROM NOISE SENSITIVE RECEPTORS AS POSSIBLE.
   C. ALL OPERATION NOISE SOURCES SHALL COMPLY WITH THE COUNTY NOISE ORDINANCE.
   D. FOR CONSTRUCTION ACTIVITIES THAT WOULD AFFECT SENSITIVE NOISE RECEPTORS OFF-CAMPUS OR IN AREAS DESIGNATED CAMPUS RESIDENTIAL IN THE COMMUNITY PLAN, THE CONTRACTOR SHALL GIVE ADVANCED REGULAR NOTIFICATION OF CONSTRUCTION ACTIVITY SCHEDULED TO THE POTENTIALLY AFFECTED RESIDENTS.

1730 N. FIRST STREET
SUITE 600
SAN JOSE, CA 95112
408-467-9100
408-467-9199 (FAX)
BKF
ENGINEERS / SURVEYORS / PLANNERS

STANFORD UNIVERSITY
SERRA STREET – PAMPAS TO EL CAMINO REAL
CONSTRUCTION SITE LOGISTICS & SAFETY PLAN

STANFORD — SANTA CLARA COUNTY — CALIFORNIA

No.	Revisions

Date: 07/18/2023
Scale: 1"=50'
Design: CU
Drawn: CU
Approved: DP
Job No: 20156102

Drawing Number:
G100
OF

DRAWING NAME: X:\20156102\Serra_Pampas\dwg\CUTS-SERRA-EAST.dwg
LAYOUT TAB NAME: G100
PLOT DATE: 7/18/2023
BY: DP

APPLICANT: STANFORD UNIVERSITY

ROAD NAME: SERRA ST AND PAMPAS LANE

COUNTY FILE NO:

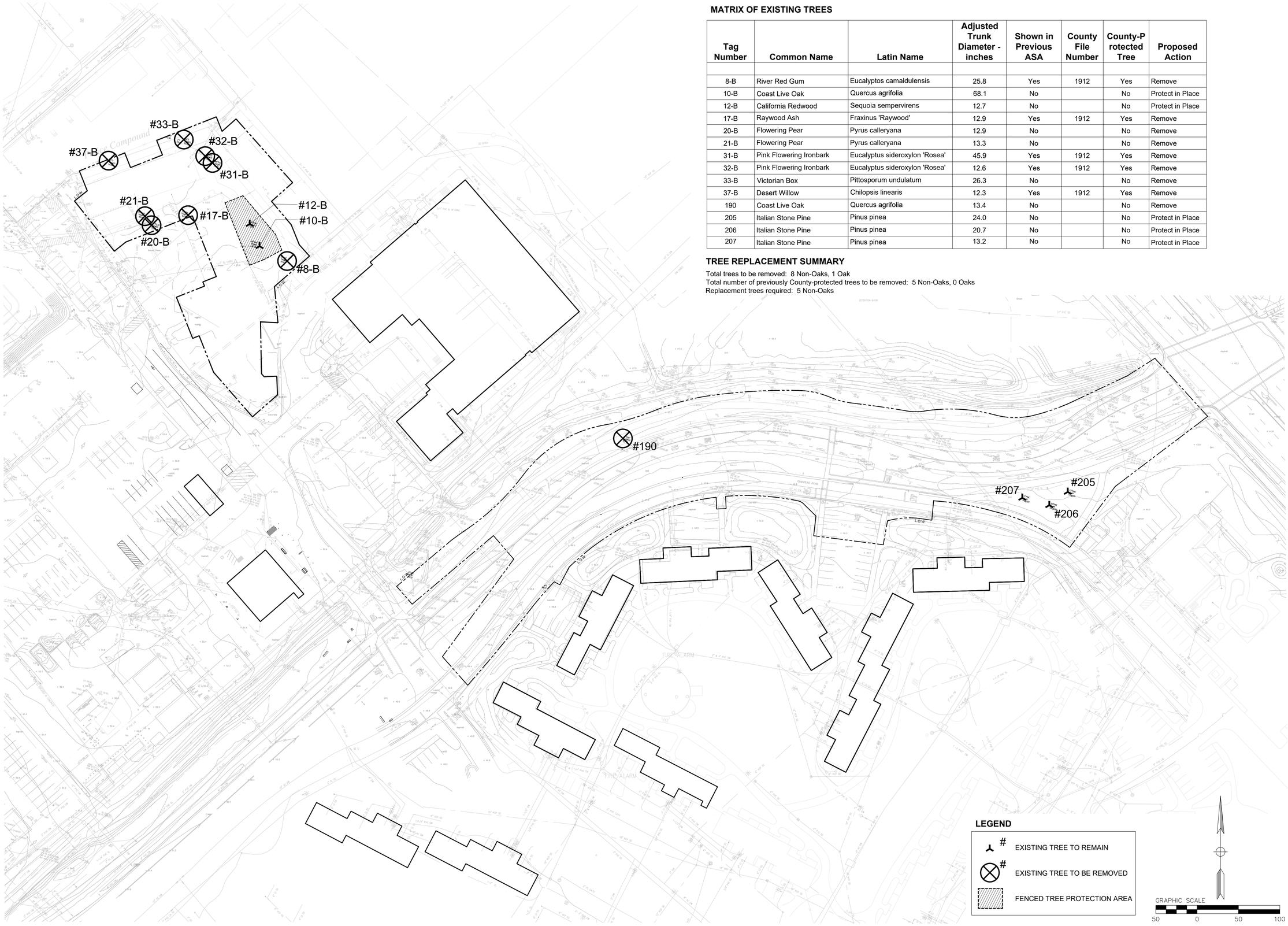

MATRIX OF EXISTING TREES

Tag Number	Common Name	Latin Name	Adjusted Trunk Diameter - inches	Shown in Previous ASA	County File Number	County-Protected Tree	Proposed Action
8-B	River Red Gum	Eucalyptos camaldulensis	25.8	Yes	1912	Yes	Remove
10-B	Coast Live Oak	Quercus agrifolia	68.1	No		No	Protect in Place
12-B	California Redwood	Sequoia sempervirens	12.7	No		No	Protect in Place
17-B	Raywood Ash	Fraxinus 'Raywood'	12.9	Yes	1912	Yes	Remove
20-B	Flowering Pear	Pyrus calleryana	12.9	No		No	Remove
21-B	Flowering Pear	Pyrus calleryana	13.3	No		No	Remove
31-B	Pink Flowering Ironbark	Eucalyptus sideroxylon 'Rosea'	45.9	Yes	1912	Yes	Remove
32-B	Pink Flowering Ironbark	Eucalyptus sideroxylon 'Rosea'	12.6	Yes	1912	Yes	Remove
33-B	Victorian Box	Pittosporum undulatum	26.3	No		No	Remove
37-B	Desert Willow	Chilopsis linearis	12.3	Yes	1912	Yes	Remove
190	Coast Live Oak	Quercus agrifolia	13.4	No		No	Remove
205	Italian Stone Pine	Pinus pinea	24.0	No		No	Protect in Place
206	Italian Stone Pine	Pinus pinea	20.7	No		No	Protect in Place
207	Italian Stone Pine	Pinus pinea	13.2	No		No	Protect in Place

TREE REPLACEMENT SUMMARY

Total trees to be removed: 8 Non-Oaks, 1 Oak
Total number of previously County-protected trees to be removed: 5 Non-Oaks, 0 Oaks
Replacement trees required: 5 Non-Oaks

Sebastian & Associates
Landscape Architects, Planners
305 North Coast Highway Suite T
Laguna Beach, CA 92651
Tel: 949.497.4549

SERRA STREET - PAMPAS TO EL CAMINO REAL

Stanford University

ASA - TREE DISPOSITION PLAN

Δ	DATE	REVISIONS

DATE:	31 MAY 2023
SCALE:	1" = 50'- 0"
JOB #:	STA - 19014
DRAWN:	J.F.
CHECKED:	S.S.
TITLE:	ASA - TREE DISPOSTION PLAN
SHEET NO.:	L-1.0

PRELIMINARY - NOT FOR CONSTRUCTION

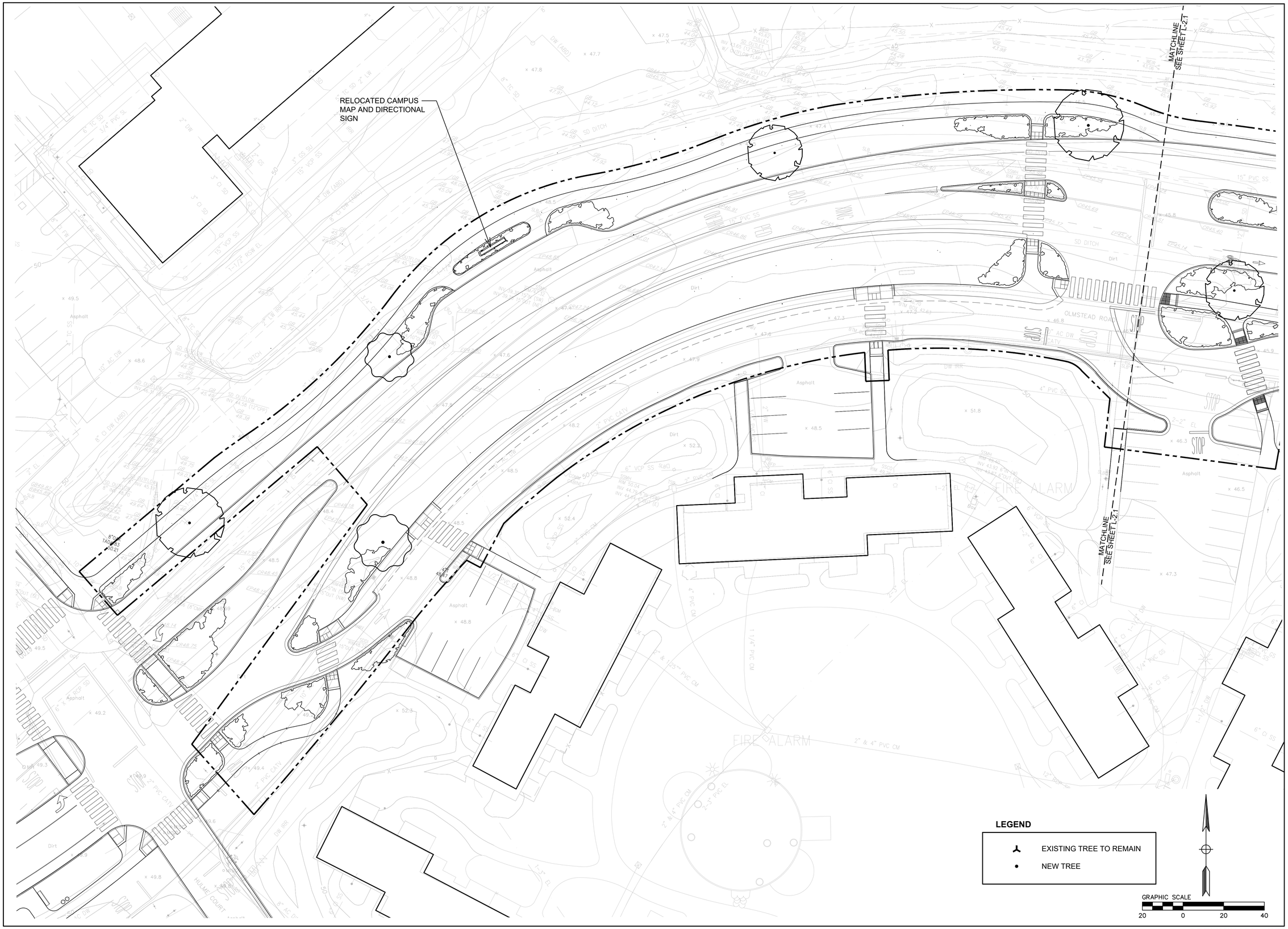

Sebastian
&
Associates
Landscape Architects, Planners
305 North Coast Highway Suite T
Laguna Beach, CA 92651
Tel: 949.497.4549

SERRA STREET - PAMPAS TO EL CAMINO REAL

Stanford University

ASA - ILLUSTRATIVE LANDSCAPE PLAN

Δ	DATE	REVISIONS

DATE:	31 MAY 2023
SCALE:	1" = 20'- 0"
JOB #:	STA - 19014
DRAWN:	J.F.
CHECKED:	S.S.
TITLE:	ASA ILLUSTRATIVE LANDSCAPE PLAN
SHEET NO.:	**L-2.0**

PRELIMINARY - NOT FOR CONSTRUCTION

Sebastian
&
Associates

Landscape Architects, Planners

305 North Coast Highway Suite T
Laguna Beach, CA 92651
Tel: 949.497.4549

SERRA STREET - PAMPAS TO EL CAMINO REAL

Stanford University

ASA - ILLUSTRATIVE LANDSCAPE PLAN

Δ	DATE	REVISIONS

DATE:	31 MAY 2023
SCALE:	1" = 20'- 0"
JOB #:	STA - 19014
DRAWN:	J.F.
CHECKED:	S.S.
TITLE:	ASA ILLUSTRATIVE LANDSCAPE PLAN
SHEET NO.:	**L-2.1**

PRELIMINARY - NOT FOR CONSTRUCTION

Sebastian
&
Associates

Landscape Architects, Planners

305 North Coast Highway Suite T
Laguna Beach, CA 92651
Tel: 949.497.4549

SERRA STREET - PAMPAS TO EL CAMINO REAL

Stanford University

ASA - PRELIMINARY LIGHTING PLAN

Δ	DATE	REVISIONS

DATE:	31 MAY 2023
SCALE:	1" = 20'- 0"
JOB #:	STA - 19014
DRAWN:	J.F.
CHECKED:	S.S.
TITLE:	ASA PRELIM. LIGHTING PLAN
SHEET NO.:	**L-3.0**

PRELIMINARY - NOT FOR CONSTRUCTION

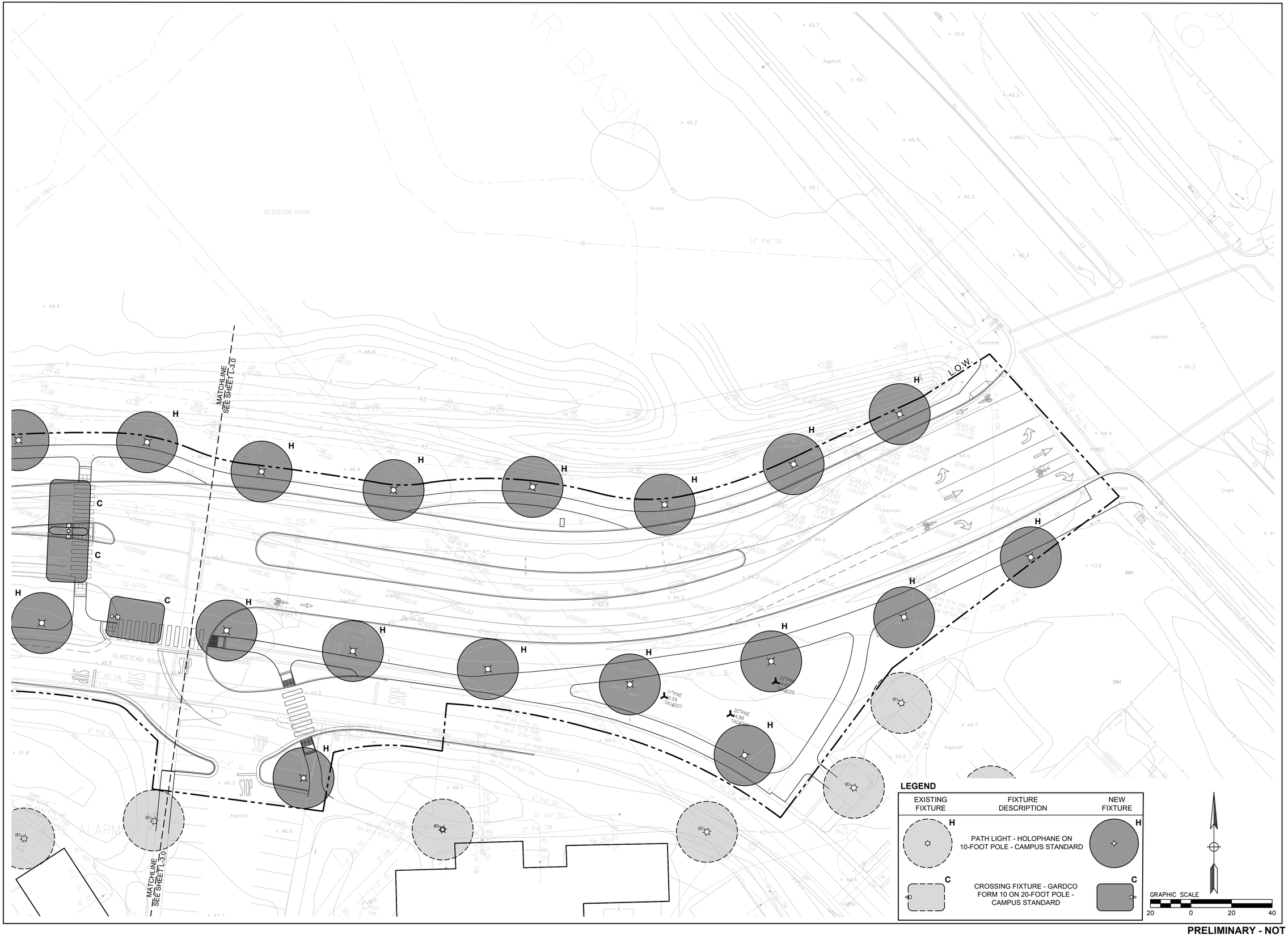

Sebastian
&
Associates

Landscape Architects, Planners

305 North Coast Highway Suite T
Laguna Beach, CA 92651
Tel: 949.497.4549

SERRA STREET - PAMPAS TO EL CAMINO REAL

Stanford University

ASA - PRELIMINARY LIGHTING PLAN

Δ	DATE	REVISIONS

DATE:	31 MAY 2023
SCALE:	1" = 20'- 0"
JOB #:	STA - 19014
DRAWN:	J.F.
CHECKED:	S.S.
TITLE:	ASA PRELIM. LIGHTING PLAN
SHEET NO.:	L-3.1

PRELIMINARY - NOT FOR CONSTRUCTION