PRELIMINARY GRADING PLAN
FOR
LANDS OF RAHN
2355 ROCKWOOD RANCH ROAD
APN 776-35-012

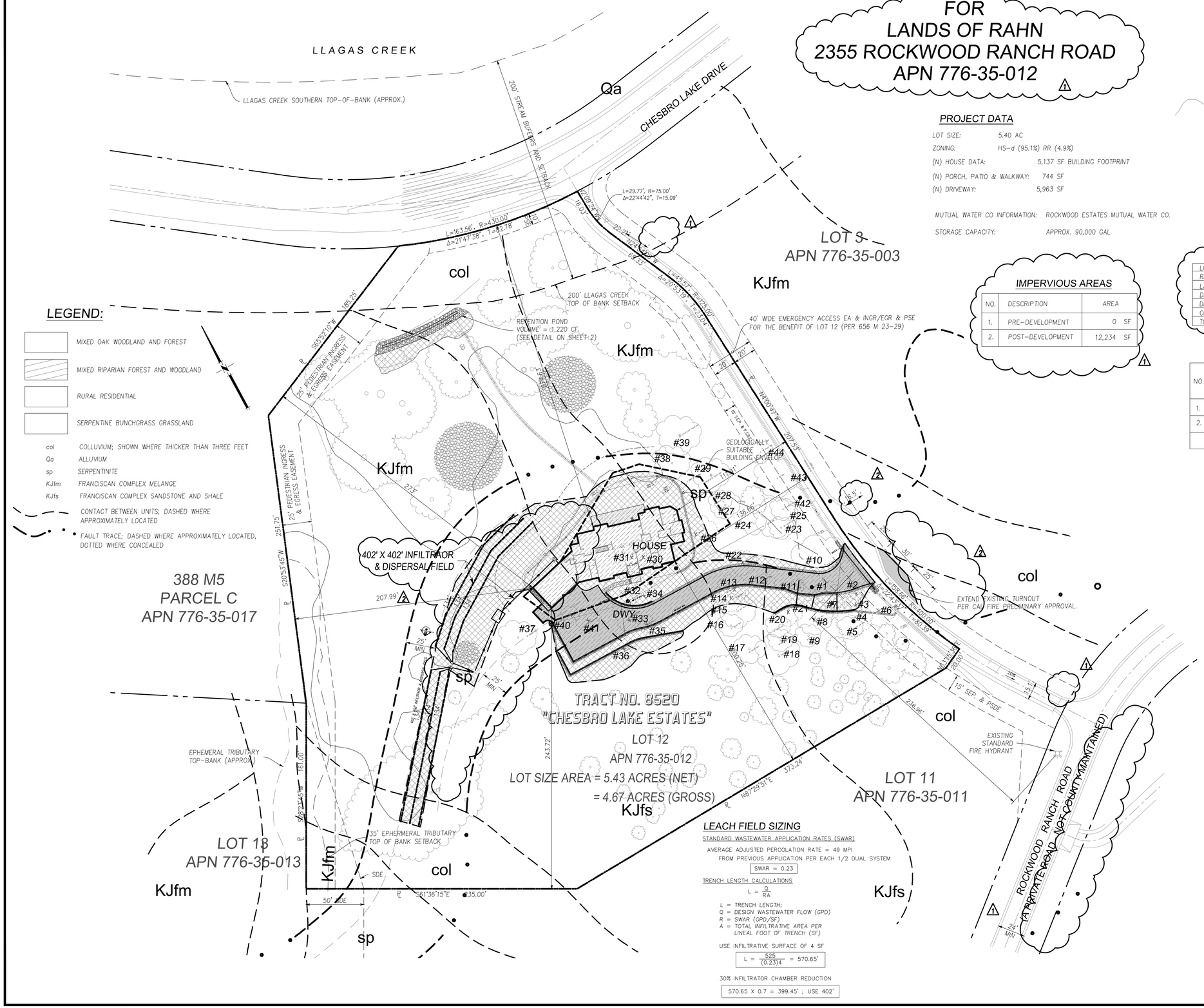

LEGEND:

- MIXED OAK WOODLAND AND FOREST
- MIXED RIPARIAN FOREST AND WOODLAND
- RURAL RESIDENTIAL
- SERPENTINE BUNCHGRASS GRASSLAND

col	COLLUVIUM; SHOWN WHERE THICKER THAN THREE FEET
Qa	ALLUVIUM
sp	SERPENTINITE
KJfm	FRANCISCAN COMPLEX MELANGE
KJfs	FRANCISCAN COMPLEX SANDSTONE AND SHALE

CONTACT BETWEEN UNITS; DASHED WHERE APPROXIMATELY LOCATED

FAULT TRACE; DASHED WHERE APPROXIMATELY LOCATED, DOTTED WHERE CONCEALED

PROJECT DATA

LOT SIZE:	5.40 AC
ZONING:	HS-d (95.1%) RR (4.9%)
(N) HOUSE DATA:	5,137 SF BUILDING FOOTPRINT
(N) PORCH, PATIO & WALKWAY:	744 SF
(N) DRIVEWAY:	5,963 SF
MUTUAL WATER CO INFORMATION:	ROCKWOOD ESTATES MUTUAL WATER CO.
STORAGE CAPACITY:	APPROX. 90,000 GAL

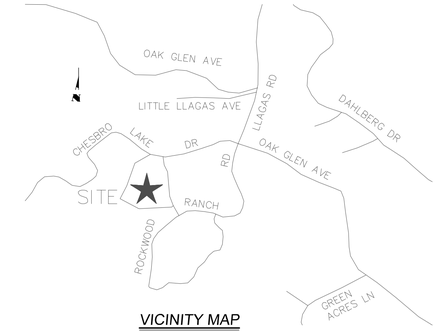

VICINITY MAP
NTS

IMPERVIOUS AREAS

NO.	DESCRIPTION	AREA
1.	PRE-DEVELOPMENT	0 SF
2.	POST-DEVELOPMENT	12,234 SF

EARTHWORK QUANTITY

LOCATION	CUT (C.Y.)	FILL (C.Y.)	VERT. DEPTH
RESIDENCE	207	259	7'
LANDSCAPE	148	388	3'
DRIVEWAY	1,669	79	12'
DETENTION	45		
OFF SITE IMPROVEMENTS	–	–	–
TOTAL	2,070	726	

DISTURBED AREAS

NO.	DESCRIPTION	AREA (SQUARE FEET) ON-SITE	AREA (SQUARE FEET) OFF-SITE
1.	TEMPORARY	22,792	0
2.	PERMANENT	15,232	444
	TOTAL AREA	38,024	444

TREES TO BE REMOVED

TREE NO.	SPECIES	DIAMETER (IN)	CANOPY DIA (FT)	AREA (SF)
1	VALLEY OAK	21	20	314
2	COAST LIVE OAK	15	DEAD	
3	VALLEY OAK	10	20	314
6	VALLEY OAK	15	30	707
7	VALLEY OAK	16	20	314
11	OAK	12	DEAD	
12	VALLEY OAK	17	15	177
13	VALLEY OAK	16	25	491
14	VALLEY OAK	15	25	491
21	OAK	18	25	491
22	VALLEY OAK	22	22	380
26	OAK	28	35	962
30	VALLEY OAK	22	30	707
31	VALLEY OAK	24	25	491
33	OAK	22	20	314
34	VALLEY OAK	15	20	314
35	OAK	13	15	177
36	VALLEY OAK	14	25	491
40	VALLEY OAK	12	15	177
41	VALLEY OAK	10	20	314
	TOTAL	20		7626*

* OAK CANNOPY TO BE REMOVED

LEACH FIELD SIZING

STANDARD WASTEWATER APPLICATION RATES (SWAR)

AVERAGE ADJUSTED PERCOLATION RATE = 49 MPI
FROM PREVIOUS APPLICATION PER EACH 1/2 DUAL SYSTEM

SWAR = 0.23

TRENCH LENGTH CALCULATIONS

$$L = \frac{Q}{RA}$$

L = TRENCH LENGTH;
Q = DESIGN WASTEWATER FLOW (GPD)
R = SWAR (GPD/SF)
A = TOTAL INFILTRATIVE AREA PER LINEAL FOOT OF TRENCH (SF)

USE INFILTRATIVE SURFACE OF 4 SF

$$L = \frac{525}{(0.23)4} = 570.65'$$

30% INFILTRATOR CHAMBER REDUCTION

570.65 X 0.7 = 399.45' ; USE 402'

NOTES:

1. FIRE SPRINKLERS ARE TO BE A DEFERRED SUBMITTAL.
2. ROCKWOOD RANCH ROAD & DRIVEWAY TO BE CAPABLE OF SUPPORTING A 75,000 LBS FIRETRUCK AND THAT THE DRIVEWAY BE MAINTAINED TO SUPPORT 40,000 LBS.
3. THE RUNOFF ON SITE SHALL BE COLLECTED BY STORM DRAIN INLETS AND DRAINED TO THE RETENTION BY THE PIPE.

REGISTERED PROFESSIONAL ENGINEER
N. M. L.
No. 47518
CIVIL
STATE OF CALIFORNIA

APPROVED FOR ISSUANCE
REFER TO ENCROACHMENT AND/OR CONSTRUCTION PERMIT AND PLAN COVER SHEET FOR SPECIAL CONDITIONS AND PERMIT NUMBERS

NO.	REVISIONS	APP'D	DATE	BY
2	PLANNING COMMENTS		10/20/22	
1	PLANNING COMMENTS		9/7/22	

PT	DESIGNED	11/17/21
PT	DRAWN	11/17/21
1" = 40'	SCALE	
NL	CHECKED	11/17/21

LC ENGINEERING
598 E Santa Clara St #270
San Jose, CA 95112
Phone: (408) 806-7187

SITE PLAN
LANDS OF RAHN
2355 ROCKWOOD RANCH ROAD
APN 776-35-012

Morgan Hill California

PROJECT NO.
CONTRACT NO.
DRAWING NO.
SHT NO. 1 OF 5
FILE NO.

APPLICANT : RAHN ROAD NAME : ROCKWOOD RANCH ROAD COUNTY FILE NO :

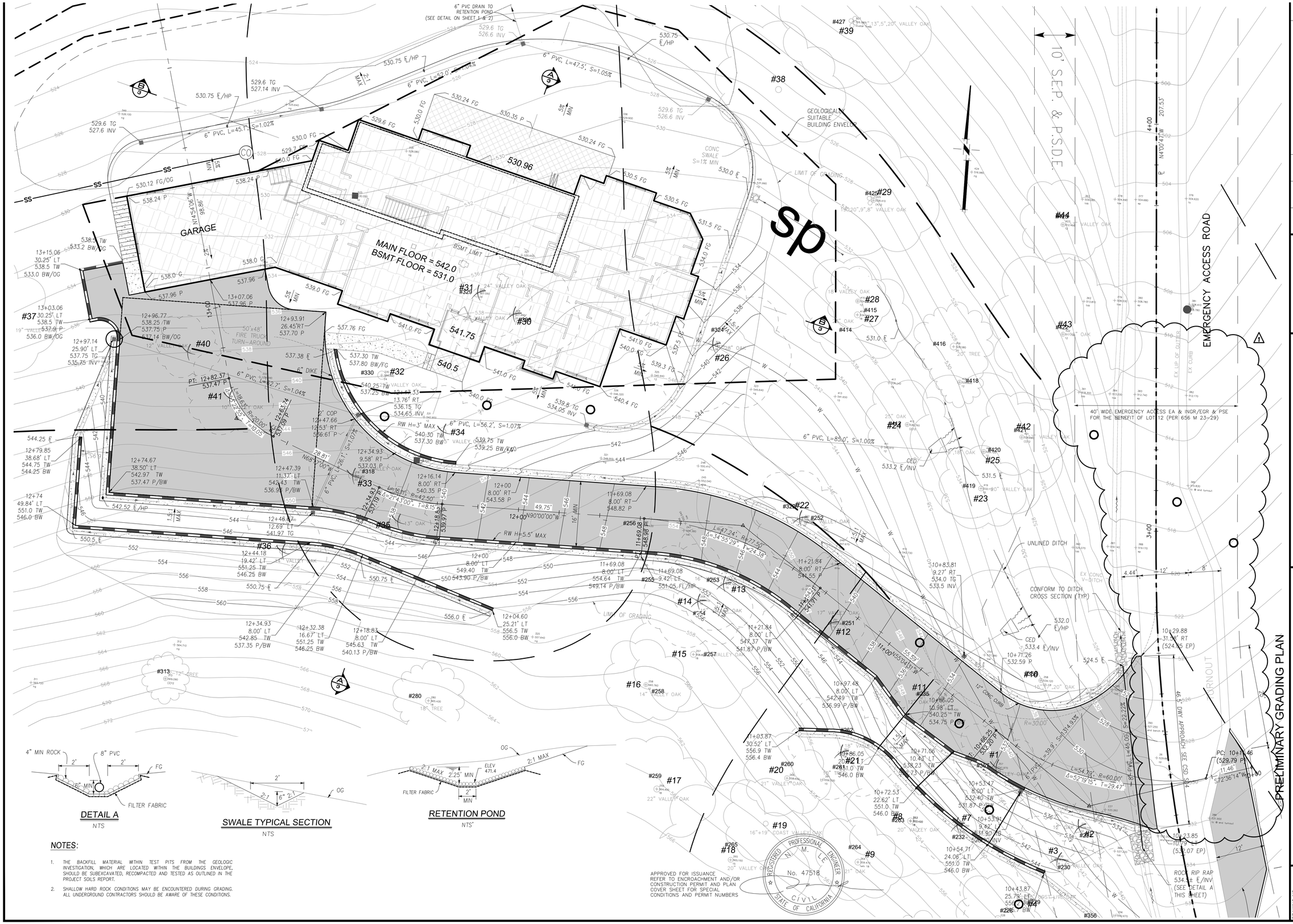

DETAIL A

NTS

SWALE TYPICAL SECTION

NTS

RETENTION POND

NTS'

NOTES:

1. THE BACKFILL MATERIAL WITHIN TEST PITS FROM THE GEOLOGIC INVESTIGATION, WHICH ARE LOCATED WITHIN THE BUILDINGS ENVELOPE, SHOULD BE SUBEXCAVATED, RECOMPACTED AND TESTED AS OUTLINED IN THE PROJECT SOILS REPORT.
2. SHALLOW HARD ROCK CONDITIONS MAY BE ENCOUNTERED DURING GRADING. ALL UNDERGROUND CONTRACTORS SHOULD BE AWARE OF THESE CONDITIONS.

APPROVED FOR ISSUANCE
REFER TO ENCROACHMENT AND/OR CONSTRUCTION PERMIT AND PLAN COVER SHEET FOR SPECIAL CONDITIONS AND PERMIT NUMBERS

REGISTERED PROFESSIONAL ENGINEER — N. M. LE — No. 47518 — CIVIL — STATE OF CALIFORNIA

NO.	REVISIONS	APP'D	DATE	BY
1	PLANNING COMMENTS		9/7/22	

QB	DESIGNED	11/17/21 DATE
PT	DRAWN	11/17/21 DATE
1" = 10'	SCALE	
NL	CHECKED	11/17/21 DATE

LE ENGINEERING
598 E Santa Clara St #270
San Jose, CA 95112
Phone: (408) 806-7187

GRADING, DRAINAGE PLAN
LANDS OF RAHN
2355 ROCKWOOD RANCH ROAD
APN 776-35-012

Morgan Hill California

PROJECT NO.

CONTRACT NO.

DRAWING NO.

SHT NO. 2 OF 5

FILE NO.

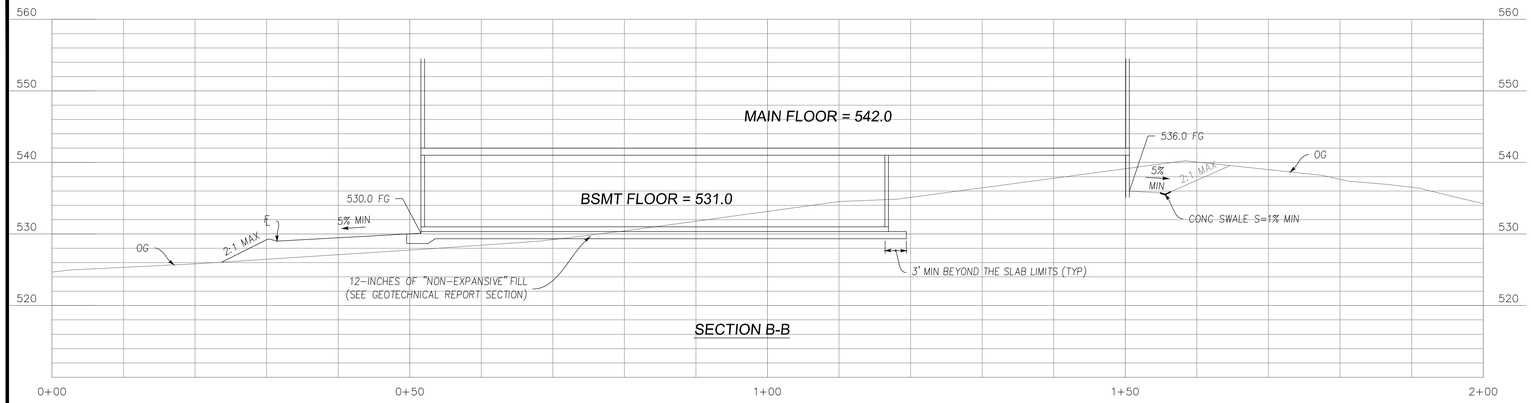

SECTION B-B

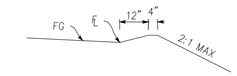

DETAIL B

NTS

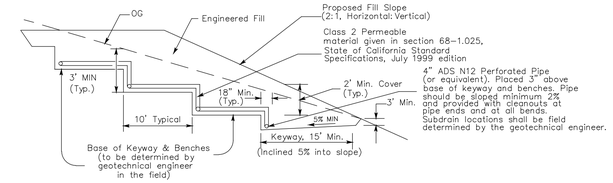

KEYWAY DETAILS (FOR FILL SLOPE > 6:1)

NOTES: Outlets for subdrains shall be located by the geotechnical engineer.
The necessity for subdrains shall be field determined by
the geotechnical engineer.

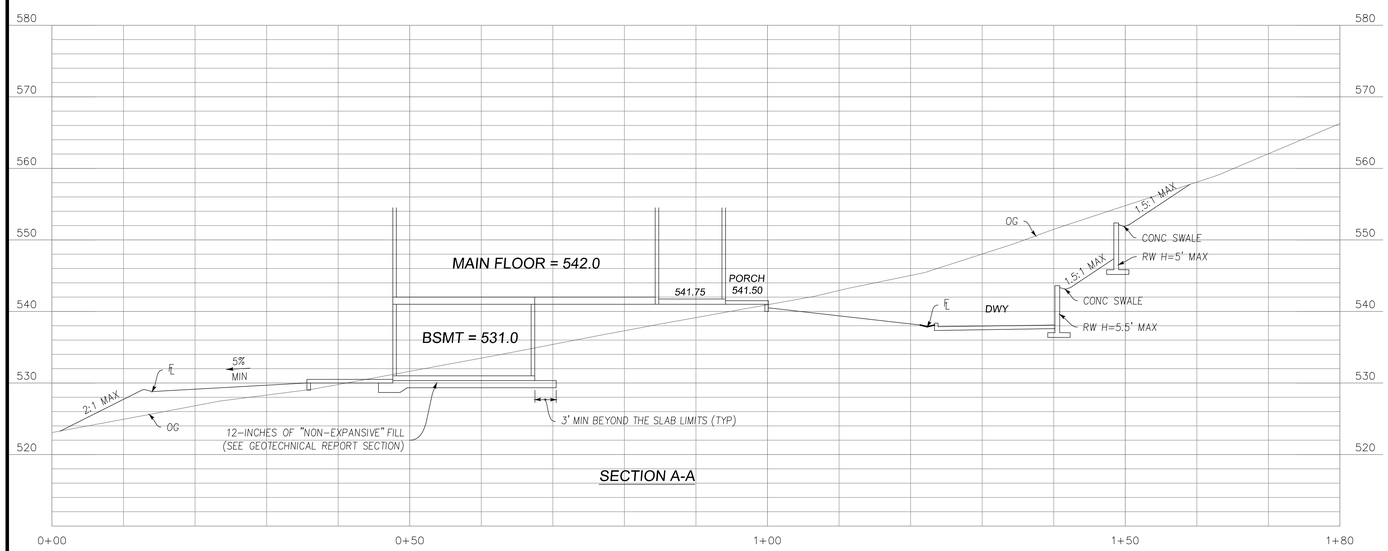

SECTION A-A

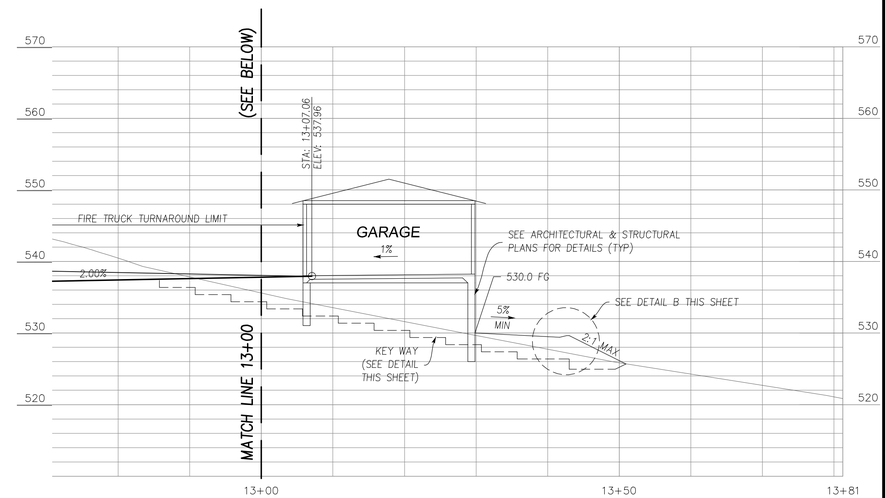

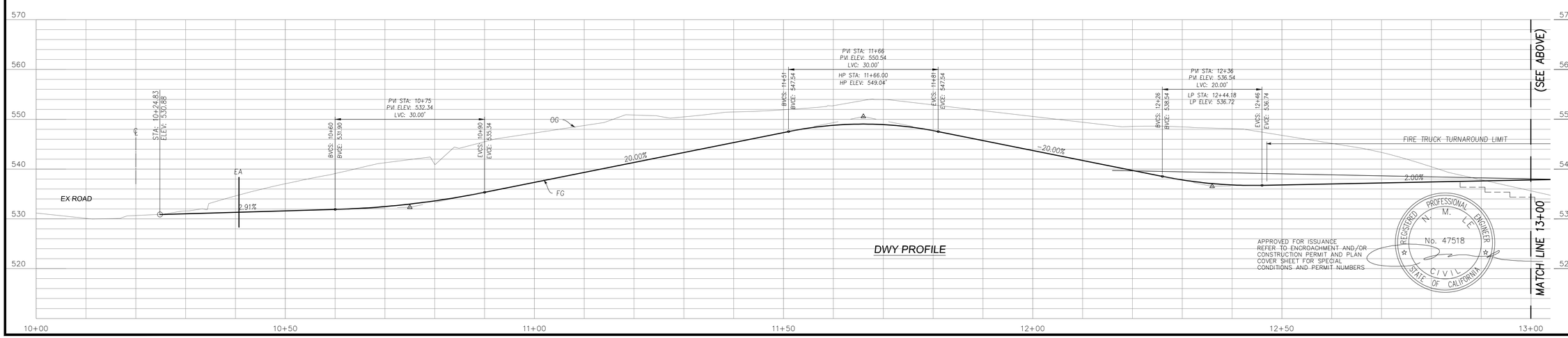

DWY PROFILE

APPROVED FOR ISSUANCE
REFER TO ENCROACHMENT AND/OR
CONSTRUCTION PERMIT AND PLAN
COVER SHEET FOR SPECIAL
CONDITIONS AND PERMIT NUMBERS

REGISTERED PROFESSIONAL ENGINEER
N. M. LE
No. 47518
CIVIL
STATE OF CALIFORNIA

NO.	REVISIONS	APP'D	DATE	BY
1	PLANNING COMMENTS		9/7/22	

	DATE
PT DESIGNED	11/17/21
PT DRAWN	11/17/21
1" = 10' SCALE	
NL CHECKED	11/17/21

LE ENGINEERING
598 E Santa Clara St #270
San Jose, CA 95112
Phone: (408) 806-7187

DRIVEWAY PROFILE AND CROSS SECTIONS
LANDS OF RAHN
2355 ROCKWOOD RANCH ROAD
APN 776-35-012

Morgan Hill California

PROJECT NO.
CONTRACT NO.
DRAWING NO.
SHT NO. 3 OF 5
FILE NO.

APPLICANT : RAHN ROAD NAME : ROCKWOOD RANCH ROAD COUNTY FILE NO :

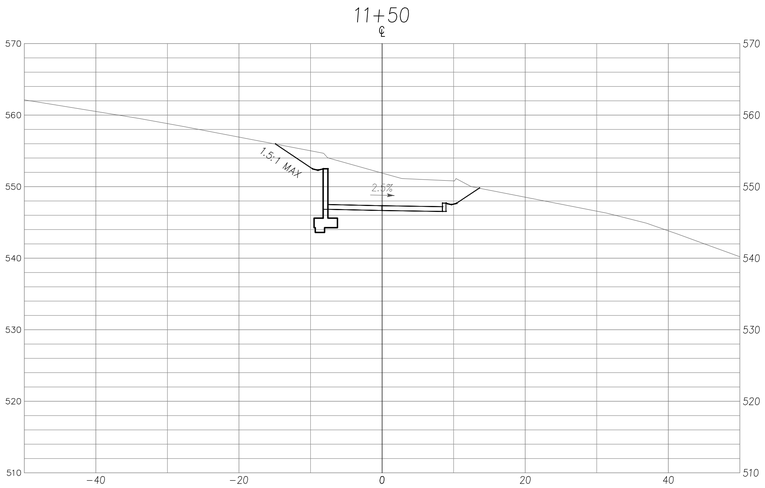

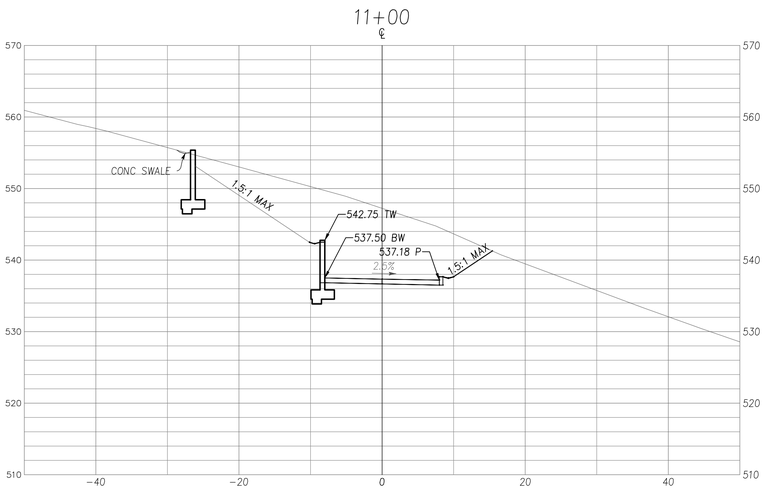

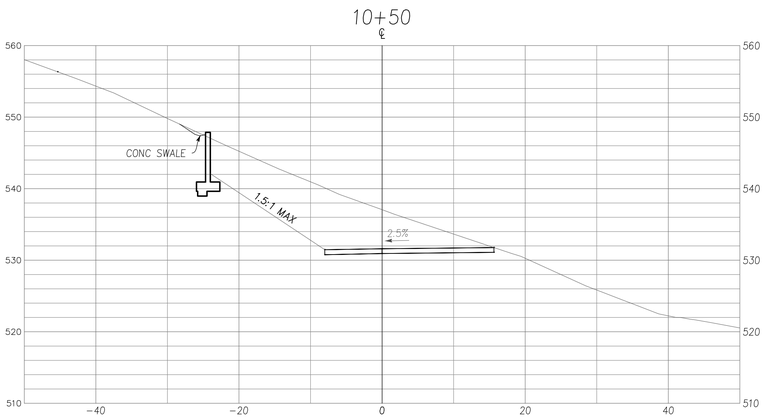

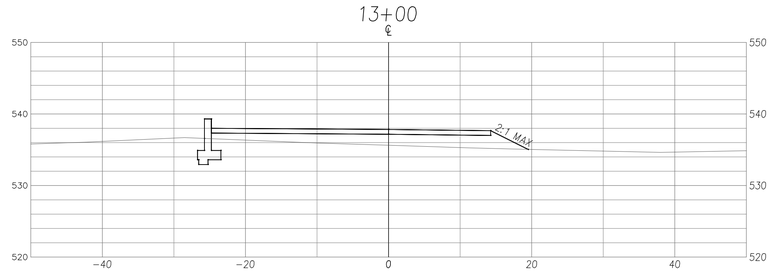

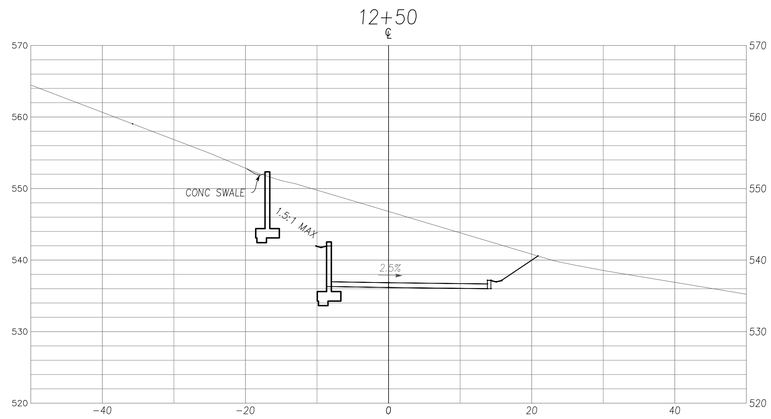

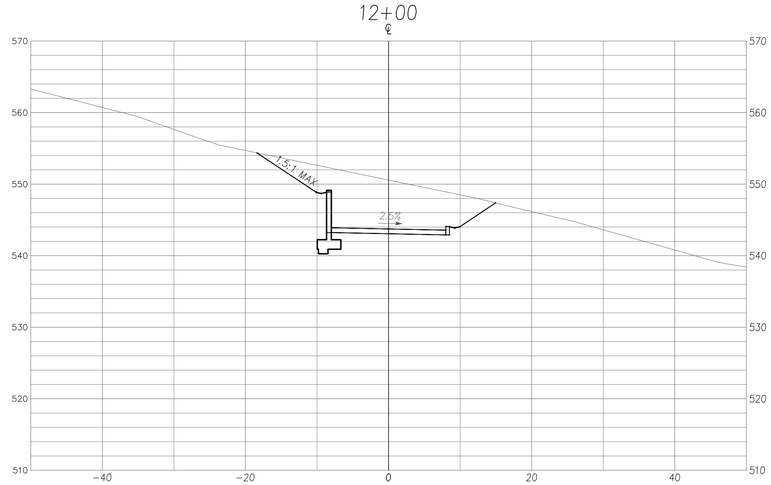

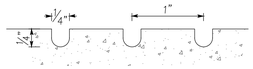

DRIVEWAY GROOVING DETAIL

NTS

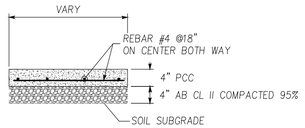

CONC DRIVEWAY SECTION

NTS

ESTIMATE EARTHWORK QUANTITY

No.	STATION		AREA (SQUARE FEET) CUT	AREA (SQUARE FEET) FILL	DISTANCE (FEET)	VOLUME (CUBIC YARD) CUT	VOLUME (CUBIC YARD) FILL
1	A-A	MIDDLE	80.00	100.00	70.00	207.41	259.26
1	A-A	(LEFT)		70.00	80.00	0.00	207.41
2	B-B	(LEFT)		61.00	80.00	0.00	180.74
3	A-A	(RIGHT)			COUNTED ON DRIVEWAY SECTION		
4	B-B	(RIGHT)	40.00		100.00	148.15	0.00
5	10+50		197.00				
					50.00	437.96	0.00
6	11+00		276.00				
					50.00	345.37	0.00
7	11+50		97.00				
					50.00	230.56	0.00
8	12+00		152.00				
					50.00	398.15	0.00
9	12+50		278.00				
					50.00	257.41	78.70
10	13+00			85.00			
	DETENTION					45.19	
				TOTAL		2,070.00	726.00

IMPORT	0	CUBIC YARD
EXPORT	1,344	CUBIC YARD

NO.	REVISIONS	DATE	APP'D	BY
1	PLANNING COMMENTS	9/7/22		

PT DESIGNED 11/17/21 DATE
PT DRAWN 11/17/21 DATE
1" = 10' SCALE
NL CHECKED 11/17/21 DATE

LE ENGINEERING
598 E Santa Clara St #270
San Jose, CA 95112
Phone: (408) 806-7187

DRIVEWAY SECTIONS
LANDS OF RAHN
2355 ROCKWOOD RANCH ROAD
APN 776-35-012

Morgan Hill California

PROJECT NO.
CONTRACT NO.
DRAWING NO.
SHT NO. 4 OF 5
FILE NO.

APPLICANT : RAHN
ROAD NAME : ROCKWOOD RANCH ROAD
COUNTY FILE NO :

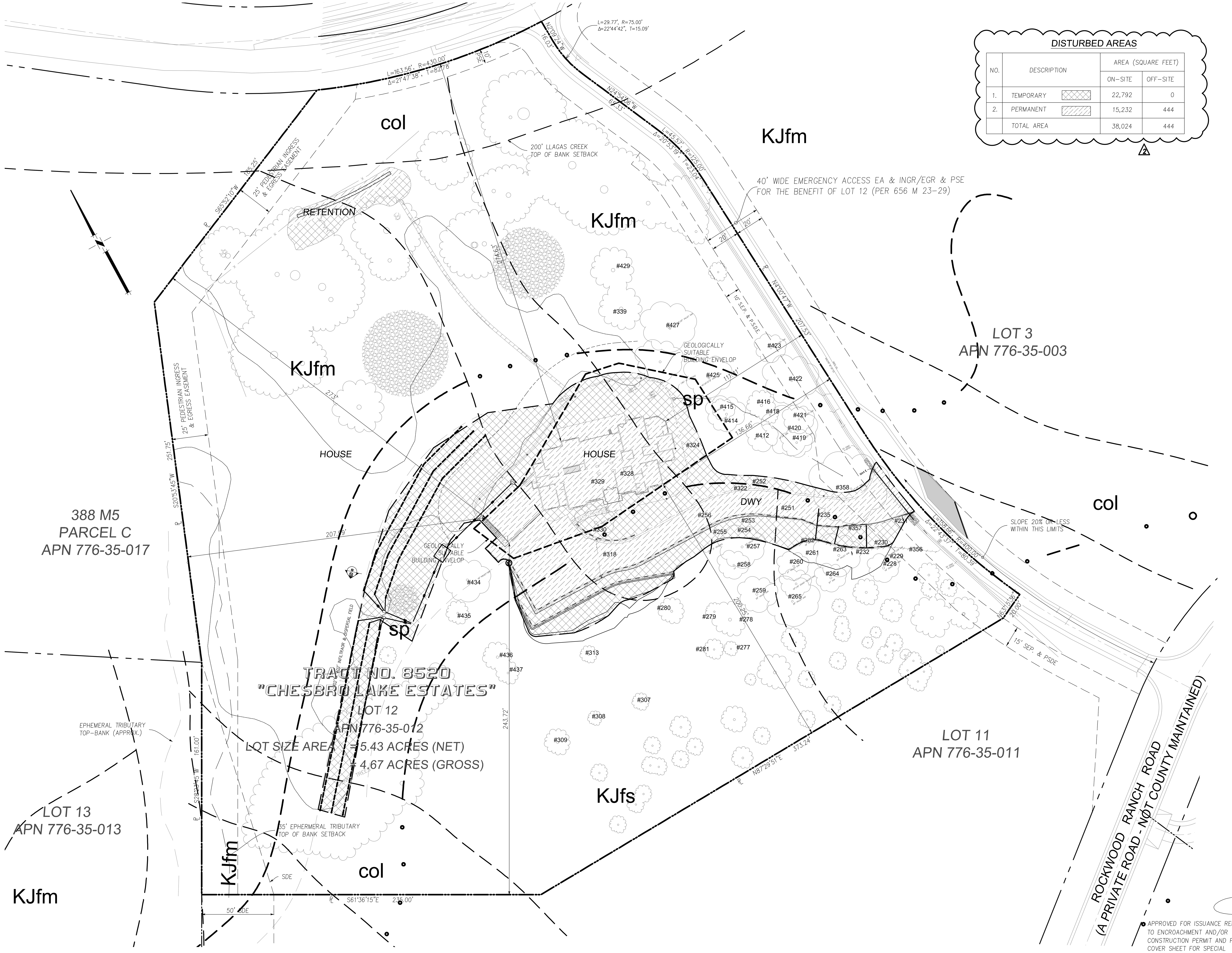

DISTURBED AREAS

NO.	DESCRIPTION	AREA (SQUARE FEET) ON-SITE	AREA (SQUARE FEET) OFF-SITE
1.	TEMPORARY	22,792	0
2.	PERMANENT	15,232	444
	TOTAL AREA	38,024	444

NO.	REVISIONS	APP'D	DATE	BY

DESIGNED: PT — DATE: 11/17/21
DRAWN: PT — DATE: 11/17/21
SCALE: 1" = 30'
CHECKED: NL — DATE: 11/17/21

LE ENGINEERING
598 E Santa Clara St #270
San Jose, CA 95112
Phone: (408) 806-7187

DISTURBED AREAS
LANDS OF RAHN
2355 ROCKWOOD RANCH ROAD
APN 776-35-012

Morgan Hill — California

PROJECT NO.
CONTRACT NO.
DRAWING NO.
SHT NO. 5 OF 5
FILE NO.