NOTES:

WASTEWATER DESIGN FLOW IS **975** GPD.
BASED ON PROPOSED **6** BEDROOM MAIN DWELLING (**675** GPD)
AND A PROPOSED 2 BEDROOM ADU (**300** GPD).

1. 4" ABS GRAVITY SEWER LINE WITH MINIMUM 2% GRADIENT AND 2-WAY CLEANOUTS SPACED 50' APART MIN.
2. 2,000 GALLON CONCRETE, PINNACLE-STYLE CHAPIN SEPTIC TANK WITH 24" ORENCO RISERS AND OSI EFFLUENT FILTER (MODEL: FTS0444-36V) TO SERVE MAIN DWELLING
3. 1,500 GALLON CONCRETE, PINNACLE-STYLE CHAPIN PUMP DOSE TANK WITH PF**1005** DISCHARGE PUMP TO SERVE MAIN DWELLING
4. 1,500 GALLON CONCRETE, PINNACLE-STYLE CHAPIN SEPTIC TANK WITH 24" ORENCO RISERS AND OSI EFFLUENT FILTER (MODEL: FTS0444-36V) TO SERVE ADU
5. 1,000 GALLON CONCRETE, PINNACLE-STYLE CHAPIN PUMP DOSE TANK WITH PF**1005** DISCHARGE PUMP TO SERVE ADU
6. TWO MVP CONTROL PANELS WITH LOGO SCREENS AND 110 OUTLET. REQUIRE **ONE 10 AMP 120 VOLT CIRCUIT AND ONE 20 AMP 120 VOLT CIRCUIT** (MODEL: MVP-S1DM)
7. FLOW METER VALVE BOX 2X (SEE DETAIL)
8. GRAVITY FLOW DISTRIBUTION BOX
9. BULL RUN VALVE (SEE DETAIL)
10. POLYLOK FLOW DIVIDER **2X** (SEE DETAIL)
11. PRIMARY AND SECONDARY DRAINFIELDS, EACH CONSISTING OF **320** LF OF TRENCH (**80** QUICK4 HIGH-CAPACITY INFILTRATOR CHAMBERS) WITH A TOTAL DEPTH OF 4 FT AND 4" INSPECTION RISERS (TYP.) ON EACH END OF TRENCH.
TOTAL: 640 LF TRENCH / 160 INFILTRATOR CHAMBERS
12. OVERFLOW/RELIEF (POP-OVER) LINE **4X**

NOTE: CONTRACTOR SHALL NOT USE PURPLE PIPE. USE OF PURPLE PIPE IS PROHIBITED PER COUNTY DEPARTMENT OF ENVIRONMENTAL HEALTH REGULATIONS. UNDERGROUND WARNING TAPE MAY BE INSTALLED BY CONTRACTOR (RECOMMENDED).

DRAINFIELD SIZING CALCULATIONS

(P) 6 BEDROOM MAIN DWELLING = 675 GPD
(P) 2 BEDROOM ADU = 300 GPD
TOTAL DESIGN FLOW = 975 GPD
AVG ADJ STABILIZED PERC RATE = 11 MPI
11 MPI = 0.78 GAL/SF APPLICATION RATE

975 GPD ÷ 0.78 GPD/SF = 1,250 SF REQUIRED
1,250 SF ÷ 4 SF/LF = 313 LF OF TRENCH REQUIRED
320 LF = 80 INFILTRATOR CHAMBERS PROPOSED
320 LF × 4 SF/LF = 1,280 SF PROPOSED
320 LF (PRIMARY) + 320 LF (SECONDARY) = 640 LF OF TRENCH PROPOSED
80 INFILTRATORS (PRIMARY) + 80 INFILTRATORS (SECONDARY) = 160 INFILTRATORS TOTAL

PRIMARY AND SECONDARY DRAINFIELDS, EACH CONSISTING OF FOUR 3 FT-WIDE, 80 FT-LONG TRENCHES COMPOSED OF 20 QUICK4 PLUS HIGH-CAPACITY INFILTRATOR CHAMBERS
TOTAL: 640 LF TRENCH / 160 INFILTRATOR CHAMBERS
EACH TRENCH SHALL HAVE A TOTAL DEPTH OF 4 FEET (SEE DETAIL)
TRENCHES SHALL BE SPACED 6 FEET ON CENTER (MIN)

IMPORTANT! SPECIFIED WASTEWATER DRAINFIELD DISPERSAL AREAS SHALL BE FENCED OFF PRIOR TO ANY SITE DEVELOPMENT IN ORDER TO PROHIBIT ANY GRADING EQUIPMENT OR STAGING OF MATERIALS IN THESE AREAS. IT IS IMPORTANT THAT THE NATURAL SOIL CONDITIONS IN THESE AREAS BE PRESERVED FOR PROPER FUNCTION OF THE SHALLOW SOIL DISCHARGE SYSTEM. DO NOT ALLOW SOILS IN THESE AREAS TO BE COMPACTED. DO NOT ROUTE UTILITY TRENCHES THROUGH THE PROPOSED DRAINFIELDS. ALL STORMWATER LINES, INLETS/OUTLETS AND DRAINAGEWAYS SHALL MAINTAIN THE REQUIRED DEH SETBACKS TO THE PROPOSED DRAINFIELDS.

ALL BUILDING PLANS PREPARED FOR THE PROJECT SHOULD INCLUDE THIS NOTE.

BULL RUN DIVERSION VALVE DETAIL

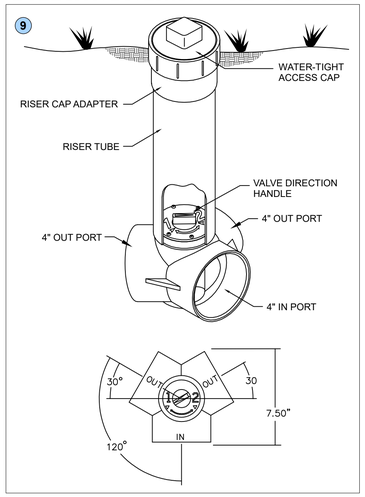

FLOW METER VALVE BOX DETAIL

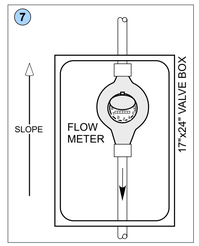

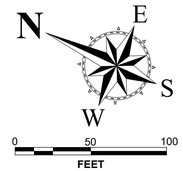

DISCLAIMER NOTE: THIS MAP WAS PREPARED SOLELY FOR THE PURPOSES OF THE ONSITE WASTEWATER TREATMENT (SEPTIC) SYSTEM (OWTS) DESIGN AND SHOULD NOT BE CONSTRUED AS SUFFICIENT FOR OTHER PURPOSES. LOCATIONS ARE APPROXIMATE. BIOSPHERE CONSULTING, INC. SHALL NOT BE HELD RESPONSIBLE FOR ANY DAMAGE CAUSED TO UTILITIES DURING CONSTRUCTION. THE LOCATION OF WELLS OR SPRINGS ON NEIGHBORING PROPERTIES HAVE BEEN IDENTIFIED AND LOCATED TO THE BEST OF OUR ABILITY WITHOUT TRESPASSING AND SHALL BE VERIFIED AND CONFIRMED BY COUNTY ENVIRONMENTAL HEALTH. BIOSPHERE CONSULTING, INC. SHALL NOT BE HELD RESPONSIBLE FOR THE LOCATIONS OF WELLS OR SPRINGS THAT MAY BE LOCATED WITHIN ANY REQUIRED SETBACKS FROM THE PROPOSED OR EXISTING OWTS. THE BASE MAP USED ON THIS SHEET HAS BEEN PREPARED OR ANNOTATED BY THIS FIRM USING TAPE AND COMPASS TECHNIQUES, GENERAL TRIANGULATION APPROXIMATIONS OR ESTIMATIONS BASED ON LINE-OF-SIGHT ALIGNMENTS AND BIOSPHERE CONSULTING, INC. ASSUMES NO RESPONSIBILITY FOR ITS ACCURACY.

COUNTY INDEX MAP

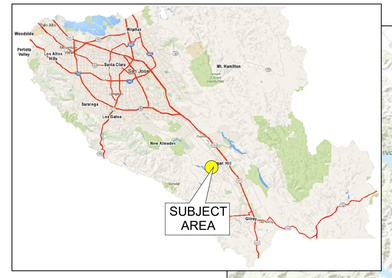

TOPOGRAPHIC VICINITY MAP

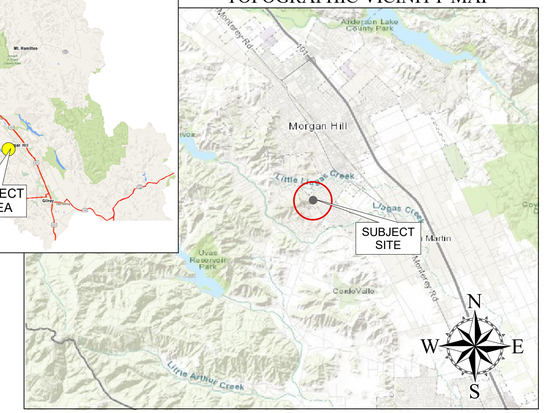

PARCEL INDEX MAP

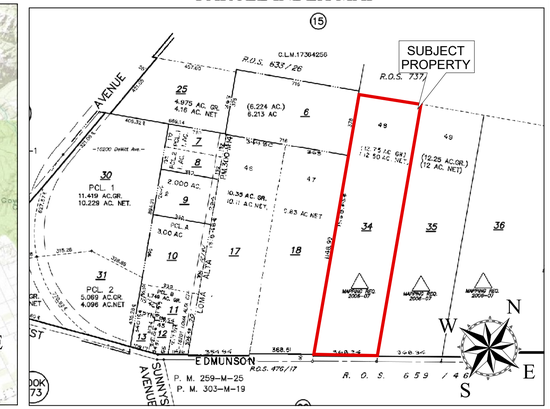

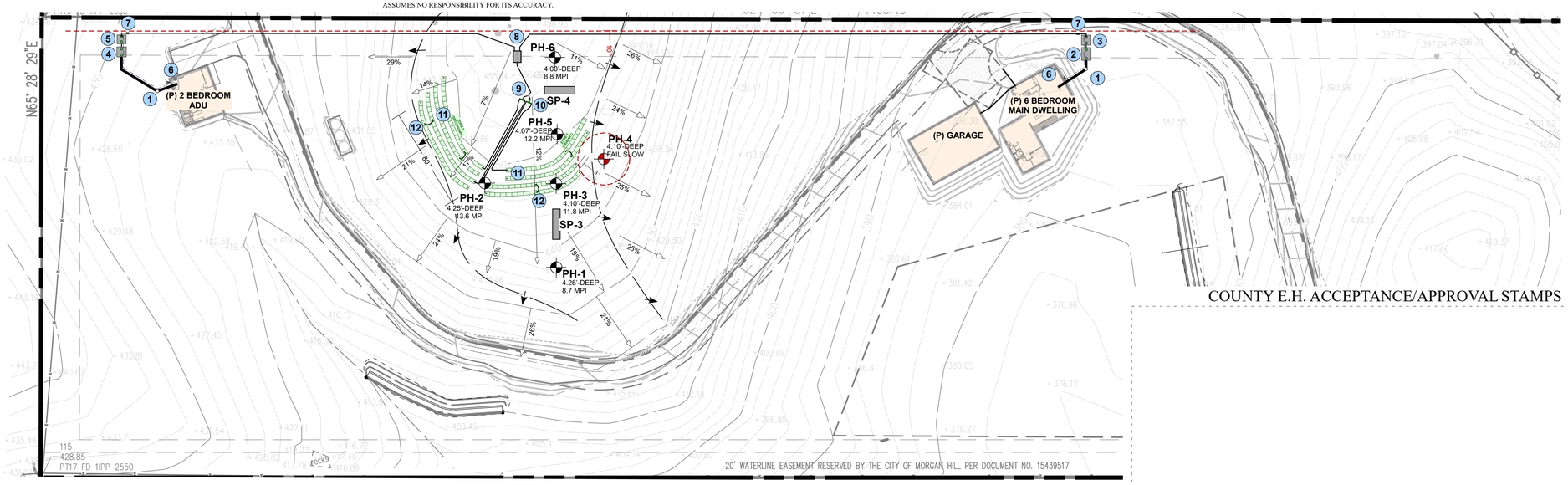

COUNTY E.H. ACCEPTANCE/APPROVAL STAMPS

POLYLOK FLOW CONTROLLER DISTRIBUTION VALVE DETAIL

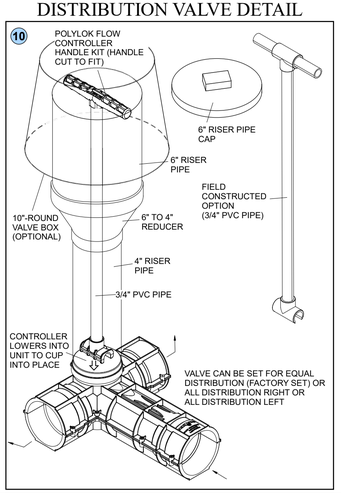

INFILTRATOR QUICK4 PLUS HIGH-CAPACITY SEPTIC DRAINFIELD TRENCH CONSTRUCTION DETAIL

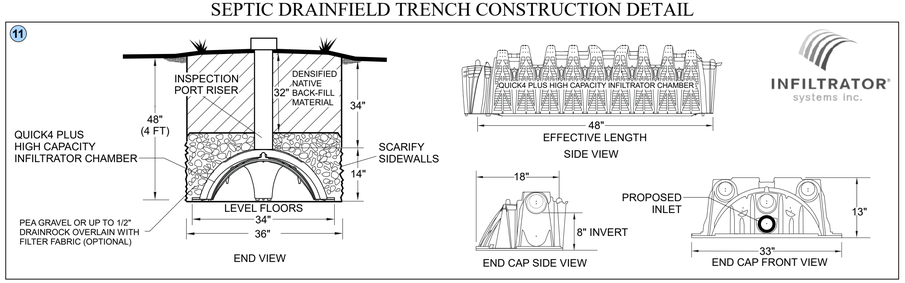

OVERFLOW/RELIEF (POP-OVER) LINE CONSTRUCTION DETAIL

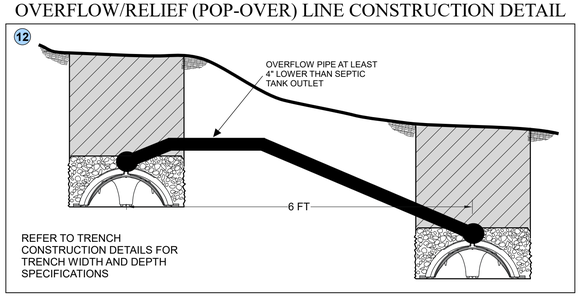

PROFESSIONAL GEOLOGIST
ANDREW BROWNSTONE
No. 7453
Exp. 12/31/23
STATE OF CALIFORNIA

BioSphere Consulting Incorporated
• Site Evaluation & Mapping
• Soil Analysis & Percolation Testing
• New Development, Upgrade & Repairs
• Residential & Commercial
Alternative Wastewater System Design
1315 King Street
Santa Cruz, CA 95060
Tel: (831) 430-9116
www.biosphere-consulting.com

ONSITE WASTEWATER TREATMENT SYSTEM DESIGN PLAN

Project Location:	W Edmundson, Morgan Hill, California 95037 [Santa Clara County]		
Property Owner:	Jim Hartigan		
Mailing Address:	16428 Peacock Lane, Los Gatos, California 95032		
Owner Phone #:	(408) 768-9343	email: jim@hartigan.net	
Date: 11/21/22	**By:** David Quinn / Andrew Brownstone		Sheet:
REVISION:		**Job No.:** 22002 **APN:** 767-19-034	**1** OF 3

THE USE OF THESE PLANS AND SPECIFICATIONS SHALL BE RESTRICTED TO THE ORIGINAL SITE FOR WHICH THEY WERE PREPARED AND PUBLICATION THEREOF IS EXPRESSLY LIMITED TO SUCH USE. REPRODUCTION OR PUBLICATION BY ANY METHOD, IN WHOLE OR PART, IS PROHIBITED. BIOSPHERE CONSULTING, INC. MAINTAINS TITLE OWNERSHIP OF THE PLANS AND SPECIFICATIONS WITHOUT PREJUDICE. VISUAL CONTACT WITH THESE PLANS AND SPECIFICATIONS SHALL CONSTITUTE PRIMA FACIE EVIDENCE OF THE ACCEPTANCE OF THESE RESTRICTIONS.

PROJECT DESCRIPTION

A conventional onsite pump up wastewater system with gravity flow to infiltrator trenches is proposed to serve a proposed 6 bedroom dwelling and a proposed 2 bedroom ADU located on W Edmundson, Morgan Hill, in Santa Clara County, California.

CONSTRAINTS & DESIGN CRITERIA

- The proposed system is sized to serve a 6 bedroom dwelling and a 2 bedroom ADU with a total design wastewater flow of 975 gallons per day (gpd) per County DEH guidelines.
- Soil profiles did not exhibit any evidence of seasonally high groundwater conditions. Seasonally high groundwater was measured to be 14' below grade.
- No wells, springs or watercourses are situated within 100' of the proposed Onsite Wastewater Treatment System.

DRAINFIELD SIZING CALCULATIONS

(P) 6 BEDROOM MAIN DWELLING = 675 GPD
(P) 2 BEDROOM ADU = 300 GPD
TOTAL DESIGN FLOW = 975 GPD
AVG ADJ STABILIZED PERC RATE = 11 MPI
11 MPI = 0.78 GAL/SF APPLICATION RATE

975 GPD ÷ 0.78 GPD/SF = 1,250 SF REQUIRED
1,250 SF ÷ 4 SF/LF = 313 LF OF TRENCH REQUIRED
320 LF = 80 INFILTRATOR CHAMBERS PROPOSED
320 LF × 4 SF/LF = 1,280 SF PROPOSED
320 LF (PRIMARY) + 320 LF (SECONDARY) = 640 LF OF TRENCH PROPOSED
80 INFILTRATORS (PRIMARY) + 80 INFILTRATORS (SECONDARY) = 160 INFILTRATORS TOTAL

PRIMARY AND SECONDARY DRAINFIELDS, EACH CONSISTING OF FOUR 3 FT-WIDE, 80 FT-LONG TRENCHES COMPOSED OF 20 QUICK4 PLUS HIGH-CAPACITY INFILTRATOR CHAMBERS
TOTAL: 640 LF TRENCH / 160 INFILTRATOR CHAMBERS
EACH TRENCH SHALL HAVE A TOTAL DEPTH OF 4 FEET (SEE DETAIL)
TRENCHES SHALL BE SPACED 6 FEET ON CENTER (MIN)

SPECIFICATIONS

1. Building Sewer Lines, & Proposed Processing Tank
   - 1.1. A 4" ABS building sewer line shall be installed to convey all raw sewage from dwelling and ADU to the septic tank. All gravity sewer piping must maintain a minimum 2% continuous gradient. ***All wastewater including graywater shall be discharged to the septic tank.***
   - 1.2. Locate a 2-way, 4" ABS cleanout fittings on the building sewer to facilitate snaking and line locations.
   - 1.3. One 2,000 gallon and one 1,500 gallon, watertight, concrete, pinnacle style tanks from Chapin, are specified for use as septic tanks. The tanks shall have 24" diameter OSI access risers with fiberglass, bolt-down lids (brown). The tanks shall be installed according to the manufacturers guidelines.
   - 1.4. The tank holes shall be excavated so that the tanks sit level. Install the access risers with a watertight joint using the adhesives supplied by manufacturer. Access riser lids shall be brown unless otherwise requested.
   - 1.5. Install the tank inlet fittings with a watertight joint. Cap off or use a test plug on these fittings and fill the tanks with clean water 2" above the joint between the riser and the tank top. Repair any leaks.
   - 1.6. Obtain a watertight tank inspection by EH and the designer or distributor with 24 hours notice to each.
   - 1.7. Install an OSI Effluent Filter (Model: FTS0444-36V) at each tank outlet.
2. Discharge Pump Tank and Filtrate Pumping
   - 2.1. One 1,500 gallon and one 1,000 gallon watertight, concrete, pinnacle style Chapin pump tank shall be installed adjacent to the respective septic tanks.
   - 2.2. The pump tanks shall be installed according to the manufacturer's instructions including anti-floatation specifications and be made watertight.
   - 2.3. The tank holes shall be excavated so that the tanks sit level. Install the access risers with a watertight joint using the adhesives supplied by manufacturer. Access riser lids shall be brown unless otherwise requested.
   - 2.4. Install the tank inlet fittings with a watertight joint. Cap off or use a test plug on these fittings and fill the tank with clean water 2" above the joint between the riser and the tank top. Repair any leaks.
   - 2.5. Obtain a watertight tank inspection by EH and the designer or distributor with 24 hours notice to each.
   - 2.6. Install the pumps and float trees according to the instructions provided by manufacturer/dealer.
   - 2.7. A PF1005 lift pump with EasyPak Pump Package vaults shall be installed in each pump tank.
3. Effluent Distribution and Dispersal Trenches
   - 3.1. A gravity flow distribution box, a Bull Run valve and two Polylok Flow Dividers shall be installed to divert effluent flow between the eight proposed trenches as shown on the plan.
   - 3.2. 4" ABS or SCH 40 PVC tightline shall be used to make gravity flow connections between the septic tank and the drainfield trenches. All gravity lines shall maintain a continuous 2% min. gradient.
   - 3.3. A primary and secondary leachfield shall each consist of a total of 80 Quick4 Plus High-Capacity Infiltrator Chambers.
   - 3.4. Dispersal trenches shall each have a total depth of 4 feet, shall be installed in the general location shown on the plan. The floor of each trench shall be level and sidewalls scarified.
   - 3.5. Trenches shall be spaced at least 3 feet from edge to edge.
   - 3.6. Overflow pipes shall be installed in order to supply effluent to all the trenches. Please refer to overflow construction detail.
   - 3.7. A 4" ABS inspection riser with tight cap shall be installed at both ends of each trench and shall extend a minimum of 12" above grade or remain accessible by means of a 10" round valve box to grade.
   - 3.8. Installer shall assure that surface drainage is directed away from the proposed septic tank and dispersal trenches.
4. Piping Schedule
   - 4.1. All piping shall be installed to conform to requirements in the current California Plumbing Code.
   - 4.2. The house sewer pipe to the septic tank shall be constructed of 4" ABS and shall include a 2-way clean out fitting near dwelling as shown on the plan.
5. Installer Qualifications and Responsibilities
   - 5.1. The system installer shall be licensed by the State of California, Department of Consumer Affairs, to install septic systems.
   - 5.2. All piping shall conform to the current edition of the California Plumbing Code.
   - 5.3. The installer shall be responsible for locating any property lines, underground utilities or piping. Any damage to these facilities shall be the responsibility of the installer.
   - 5.4. For tree setback requirements, refer to the Santa Clara County Ordinance C-16 Tree Preservation and Revision.
   - 5.5. The appropriate Environmental Health Office or Specialist must be notified by the installation contractor at least 48-hours prior to starting construction and for each required inspection: Main Office (1555 Berger Drive, Suite 300, San Jose) 408-918-3400 or South County Office (80 Highland Ave, San Martin) 408-918-3400
6. Electrical Work
   - 6.1. The MVP control panel shall be installed in the location shown on the map ***with the bottom of the panel box at 51" from the ground surface.***
   - 6.2. One, 10 amp, 120V electrical circuit and one, 20 amp, 120V electrical circuit shall be extended to the MVP panel in a single conduit. Underground circuits in separate conduits shall be installed from the panel to the recirculation pump and discharge pump.
   - 6.3. All work shall conform to the California Electrical Code and the contractor shall be responsible for obtaining any electrical permits required.
7. Site Clean up and Erosion Control Measures
   - 7.1. All excavated areas shall be smoothed and all construction debris shall be removed from the site.
   - 7.2. All disturbed soils shall be seeded and mulched. Erosion Control Mix seed shall be used at the coverage recommended on the package for all disturbed soil.
   - 7.3. Straw shall be used to cover all disturbed soil.
   - 7.4. PER DIVISION C12, CHAPTER III OF THE COUNTY CODE (Sec. C12-513. Temporary erosion control.) "The permittee and any person(s) doing, causing or directing the grading shall install and maintain all precautionary measures necessary to protect adjacent watercourses and public or private property from damage by erosion, flooding, or deposition of mud or debris originating from the site. Precautionary measures must include provisions of properly designed erosion prevention and sediment control measures, so that downstream properties are not affected by upstream erosion or sediment transport by stormwater."

THE USE OF THESE PLANS AND SPECIFICATIONS SHALL BE RESTRICTED TO THE ORIGINAL SITE FOR WHICH THEY WERE PREPARED AND PUBLICATION THEREOF IS EXPRESSLY LIMITED TO SUCH USE. REPRODUCTION OR PUBLICATION BY ANY METHOD, IN WHOLE OR PART, IS PROHIBITED. BIOSPHERE CONSULTING, INC. MAINTAINS TITLE OWNERSHIP OF THE PLANS AND SPECIFICATIONS WITHOUT PREJUDICE. VISUAL CONTACT WITH THESE PLANS AND SPECIFICATIONS SHALL CONSTITUTE PRIMA FACIE EVIDENCE OF THE ACCEPTANCE OF THESE RESTRICTIONS.

2,000 GALLON PRE-CAST CONCRETE TANK DETAIL

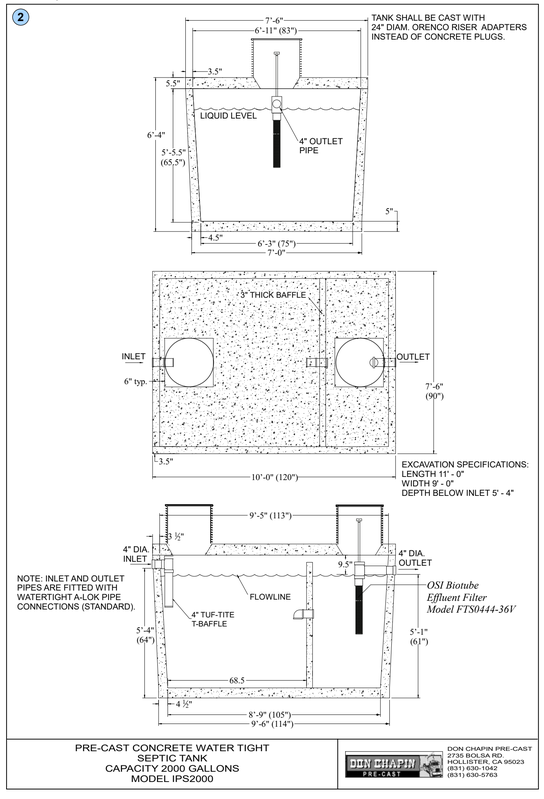

PRE-CAST CONCRETE WATER TIGHT
SEPTIC TANK
CAPACITY 2000 GALLONS
MODEL IPS2000

DON CHAPIN PRE-CAST
2735 BOLSA RD
HOLLISTER, CA 95023
(831) 630-1042
(831) 630-5763

1,500 GALLON CONCRETE PUMP TANK DETAIL

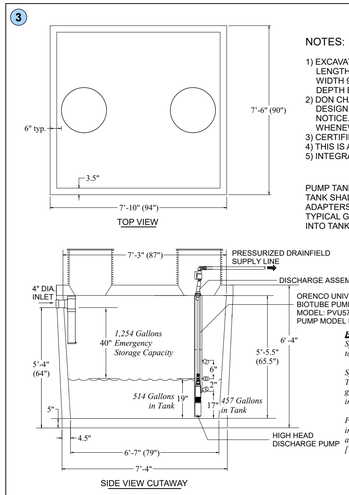

NOTES:

1) EXCAVATION SPECIFICATIONS:
   LENGTH 9' - 0"
   WIDTH 9' - 0"
   DEPTH BELOW INLET 5' - 4"
2) DON CHAPIN PRE-CAST MAY MAKE CHANGES TO THE DESIGN AND OR TO THE DIMENSIONS WITHOUT NOTICE. PLEASE CONTACT DON CHAPIN PRE-CAST WHENEVER NECESSARY TO CONFIRM DESIGN CRITERIA.
3) CERTIFIED ENGINEERING IS AVAILABLE UPON REQUEST.
4) THIS IS ALSO AVAILABLE AS AN H20 RATED ASSEMBLY.
5) INTEGRAL TOP TO BODY DESIGN.

PUMP TANK SHALL HAVE NO BAFFLE.
TANK SHALL BE CAST WITH 24" DIAM. ORENCO RISER ADAPTERS INSTEAD OF CONCRETE PLUGS.
TYPICAL GRAVITY FLOW OUTLET SHALL NOT BE CAST INTO TANK.

Float Functions	
Y	*High Level Alarm*
B	*Pump On*
R	*Pump Off*

Emergency Storage/Surge Capacity:
*Specified pump tank has a max. capacity of **1,976** gallons to top of tank and **1,768** gallons to the invert of the inlet.*

System Design Flow: 675 gallons per day (gpd)
To achieve 1.5 days of emergency storage, a capacity of 1,013 gallons is required above the "pump on" float up to the tank inlet invert elevation. [675 gpd x 1.5 = 1,013 gal]

*Pump-on float shall be set at 19" from bottom of tank resulting in **514** gallons below this float and a **1,254** gallon capacity above this float up to the invert of the tank inlet*
[1,768g - 514g = 1,254g]

PRE-CAST CONCRETE WATER TIGHT
HOLDING/PUMP TANK
CAPACITY 1500 GALLONS
MODEL IPS1500H

EFFLUENT FILTER DETAIL

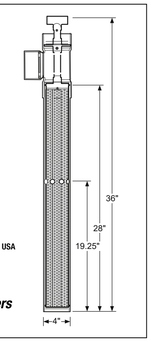

Orenco®
Orenco Systems® Inc. ,
814 Airway Ave., Sutherlin, OR 97479 USA
800-348-9843 • 541-459-4449
www.orenco.com

4-inch (100-mm) Biotube® Effluent Filters

MODEL: FTS0444-36V

1,500 GALLON CONCRETE SEPTIC TANK DETAIL

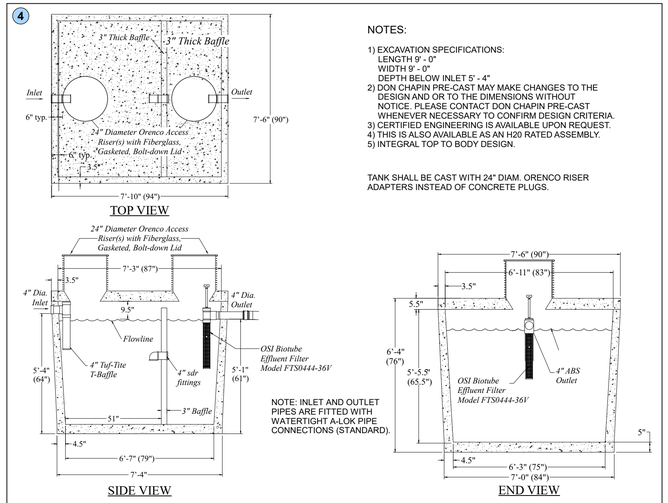

NOTES:

1) EXCAVATION SPECIFICATIONS:
   LENGTH 9' - 0"
   WIDTH 9' - 0"
   DEPTH BELOW INLET 5' - 4"
2) DON CHAPIN PRE-CAST MAY MAKE CHANGES TO THE DESIGN AND OR TO THE DIMENSIONS WITHOUT NOTICE. PLEASE CONTACT DON CHAPIN PRE-CAST WHENEVER NECESSARY TO CONFIRM DESIGN CRITERIA.
3) CERTIFIED ENGINEERING IS AVAILABLE UPON REQUEST.
4) THIS IS ALSO AVAILABLE AS AN H20 RATED ASSEMBLY.
5) INTEGRAL TOP TO BODY DESIGN.

TANK SHALL BE CAST WITH 24" DIAM. ORENCO RISER ADAPTERS INSTEAD OF CONCRETE PLUGS.

NOTE: INLET AND OUTLET PIPES ARE FITTED WITH WATERTIGHT A-LOK PIPE CONNECTIONS (STANDARD).

PRE-CAST CONCRETE WATER TIGHT
SEPTIC TANK
CAPACITY 1500 GALLONS
MODEL IPS1500

1,000 GALLON CONCRETE PUMP TANK DETAIL

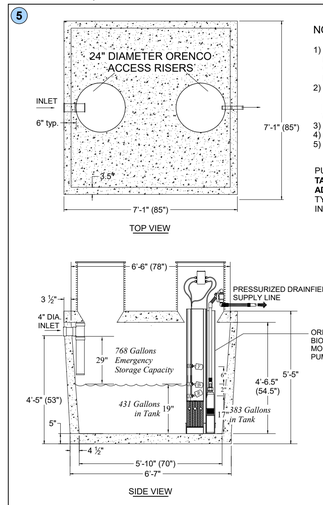

NOTES:

1) EXCAVATION SPECIFICATIONS:
   LENGTH 8' - 0"
   WIDTH 8' - 0"
   DEPTH BELOW INLET 4' - 5"
2) DON CHAPIN PRE-CAST MAY MAKE CHANGES TO THE DESIGN AND OR TO THE DIMENSIONS WITHOUT NOTICE. PLEASE CONTACT DON CHAPIN PRE-CAST WHENEVER NECESSARY TO CONFIRM DESIGN CRITERIA.
3) CERTIFIED ENGINEERING IS AVAILABLE UPON REQUEST.
4) THIS IS ALSO AVAILABLE AS AN H20 RATED ASSEMBLY.
5) INTEGRAL TOP TO BODY DESIGN.

PUMP TANK SHALL HAVE NO BAFFLE.
TANK SHALL BE CAST WITH 24" DIAM. ORENCO RISER ADAPTERS INSTEAD OF CONCRETE PLUGS.
TYPICAL GRAVITY FLOW OUTLET SHALL NOT BE CAST INTO TANK.

Float Functions	
Y	*High Level Alarm*
B	*Pump On*
R	*Pump Off*

Emergency Storage/Surge Capacity:
*Specified pump tank has a max. capacity of **1,375** gallons to top of tank and **1,199** gallons to the invert of the inlet.*

System Design Flow: 300 gallons per day (gpd)
To achieve 1.5 days of emergency storage, a capacity of 450 gallons is required above the "pump on" float up to the tank inlet invert elevation. [300 gpd x 1.5 = 450 gal]

*Pump-on float shall be set at 19" from bottom of tank resulting in **431** gallons below this float and a **768** gallon capacity above this float up to the invert of the tank inlet*
[1,199g - 431g = 768g]

PRE-CAST CONCRETE WATER TIGHT
HOLDING/PUMP TANK
CAPACITY 1000 GALLONS
MODEL IPS1000H

SYSTEM OPERATION AND MAINTENANCE

- The septic tank should be pumped when the total thickness of the scum and sludge layers in the inlet side of the tank is greater than 1/3 of total liquid level depth, typically about 2 feet.
- The effluent filter in the septic tank should be removed yearly and cleaned by hosing off into the inlet side of the septic tank. Less frequent cleanings may be acceptable.
- Grease and oils should not be put into the home drains.
- The septic tank is alive with microorganisms performing oxidation and reduction of the contents. Do not add any materials (paint thinner, paint, motor oil, unused medicine, cat litter, etc.) that may disrupt this process.
- DO NOT ROUTE WATER SOFTENER BACKFLUSH DISCHARGE TO TREATMENT SYSTEM! This discharge may be routed directly to an approved dispersal field.
- Repair all plumbing leaks (especially toilet leaks) promptly.
- Keep the area over the leach fields trimmed to prevent the growth of trees and shrubs. Do not construct anything or drive/park over the septic tanks or dispersal trenches.

COUNTY E.H. ACCEPTANCE/APPROVAL STAMPS

PROFESSIONAL GEOLOGIST
ANDREW BROWNSTONE
No. 7453
Exp. 12/31/23
STATE OF CALIFORNIA

BioSphere Consulting Incorporated
• Site Evaluation & Mapping
• Soil Analysis & Percolation Testing
• New Development, Upgrade & Repairs
• Residential & Commercial
1315 King Street
Santa Cruz, CA 95060
Tel: (831) 430-9116
Alternative Wastewater System Design
www.biosphere-consulting.com

ONSITE WASTEWATER TREATMENT SYSTEM DESIGN PLAN

Project Location:	W Edmundson, Morgan Hill, California 95037 [Santa Clara County]		
Property Owner:	Jim Hartigan		
Mailing Address:	16428 Peacock Lane, Los Gatos, California 95032		
Owner Phone #:	(408) 768-9343	email: jim@hartigan.net	
Date: 11/21/22	**By:** David Quinn / Andrew Brownstone		Sheet:
REVISION:	**Job No.:** 22002	**APN:** 767-19-034	**1** OF 3

SOIL PROFILE FIELD LOG

(modified by Andrew Brownstone after Birkeland, 1999; Table A1.3)

West Parcel — Test hole I.D. SP-3

Job Number/Name: Hartigan — Location: W. Edmundson — APN: 767-19-034
Date Soil Sampled: 1-26-22 — Time: 12:00 P.M. — Vegetation: Wild Grass w/ Oaks
Elevation: — Slope Gradient: 5% - 20% — Aspect: South/North/West — Geomorphic Surface: Top of Rolling Ridge Crest
Parent Material(s): Shale — Described by: A.B.

Sample Depth	Color (Munsell, moist)	Notes
1'	Dark Brown	
2'	Light to Medium Greenish Brown	
4'	Reddish Brown	
14'	Greenish Gray	Weathered Shale; Contacts: N/A

BOTP (NO GW OBSERVED)

SOIL PROFILE FIELD LOG

(modified by Andrew Brownstone after Birkeland, 1999; Table A1.3)

West Parcel — Test hole I.D. SP-7 — Site "D"

Job Number/Name: Hartigan — Location: W. Edmundson — APN: 767-19-034
Date Soil Sampled: 10-18-22 — Time: AM — Vegetation: Wild Grass
Elevation: — Slope Gradient: <10% — Aspect: NW — Geomorphic Surface: Base of Rolling Hills
Parent Material(s): Franciscan Derived Alluvium — Described by: A.B.

Sample Depth	Color (Munsell, moist)
1'	Medium Gray Brown
2.5'	Medium To Dark Brown
4'	Dark Brown
6'	Medium Reddish Brown

BOTP @ 12' (NO GW OBSERVED)

SOIL PROFILE FIELD LOG

(modified by Andrew Brownstone after Birkeland, 1999; Table A1.3)

West Parcel — Test hole I.D. SP-4

Job Number/Name: Hartigan — Location: W. Edmundson — APN: 767-19-034
Date Soil Sampled: 1-26-22 — Time: 1:00 P.M. — Vegetation: Wild Grass w/ Oaks
Elevation: — Slope Gradient: 5% - 20% — Aspect: South/North/West — Geomorphic Surface: Top of Rolling Ridge Crest
Parent Material(s): Meta Sandstone — Described by: A.B.

Sample Depth	Color (Munsell, moist)	Notes
2'	Dark Reddish Brown	
3'	Medium Gray Green	Extremely Weathered/Decomposed Shale; Contacts: N/A
10'	Medium Gray Green	Extremely Weathered/Decomposed Shale
14'	Medium Gray Green	Weathered Shale; Contacts: N/A

BOTP (NO GW OBSERVED)

SOIL PERCOLATION SUMMARY TABLE -- 01/27/22 WEST

Percolation Hole (PH)		1	2	3	4	5	6	
Depth		4.26'	4.25'	4.10'	4.10'	4.07'	4.00'	
Stabilized MPI	R	6.20	9.70	8.40	FAIL	8.70	6.30	
Adjusted Stabilized MPI	R_1=R x 1.4	8.68	13.58	11.76	SLOW	12.18	8.82	
Avg. Adj. Stabilized MPI	R_2=(∑R_1)/ #Holes							11.00
# Bedrooms:	FOR OFFICE USE ONLY	TANK SIZE (Gal)			Leach Line (Ft)			

PUMP SELECTION CHART

HARTIGAN WEST - 6 BEDROOM DWELLING

Parameters

Discharge Assembly Size	1.00	inches
Transport Length	460	feet
Transport Pipe Class	40	
Transport Line Size	1.00	inches
Distributing Valve Model	None	
Max Elevation Lift	78	feet
Design Flow Rate	10	gpm
Flow Meter	None	inches
'Add-on' Friction Losses	5	feet

Calculations

Transport Velocity	3.7	fps

Frictional Head Losses

Loss through Discharge	4.5	feet
Loss in Transport	25.4	feet
Loss through Valve	0.0	feet
Loss through Flowmeter	0.0	feet
'Add-on' Friction Losses	5.0	feet

Pipe Volumes

Vol of Transport Line	20.7	gals

Minimum Pump Requirements

Design Flow Rate	10.0	gpm
Total Dynamic Head	112.9	feet

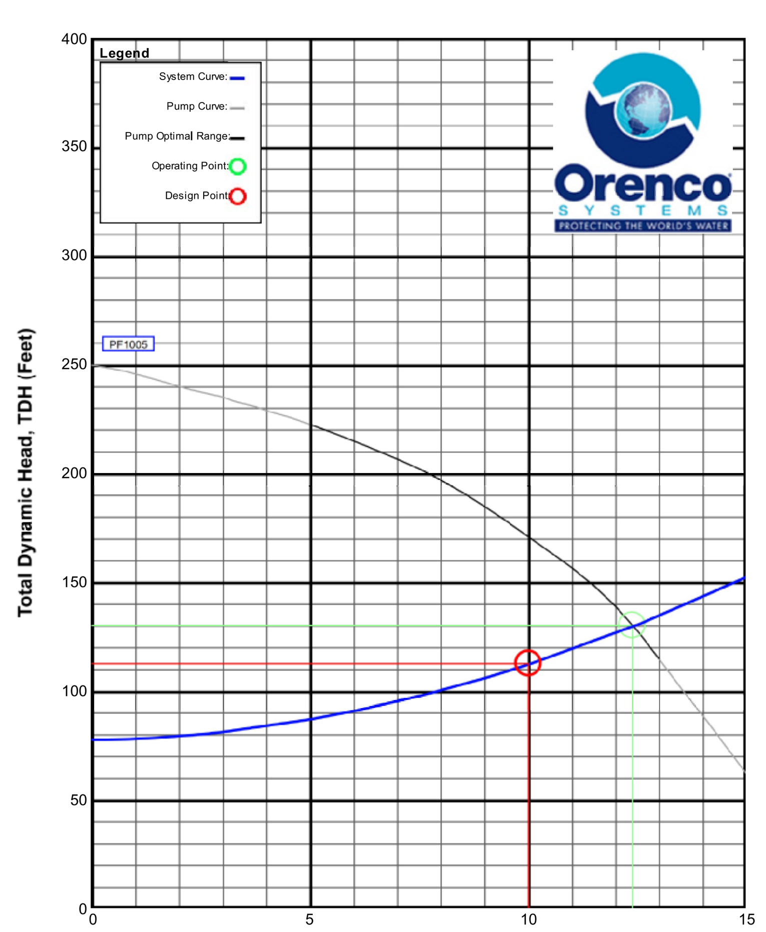

PUMP SELECTION CHART

HARTIGAN WEST - 2 BEDROOM ADU

Parameters

Discharge Assembly Size	1.0FC	inches
Transport Length	318	feet
Transport Pipe Class	40	
Transport Line Size	1.00	inches
Distributing Valve Model	None	
Max Elevation Lift	33	feet
Design Flow Rate	10	gpm
Flow Meter	None	inches
'Add-on' Friction Losses	5	feet

Calculations

Transport Velocity	3.7	fps

Frictional Head Losses

Loss through Discharge	94.0	feet
Loss in Transport	17.5	feet
Loss through Valve	0.0	feet
Loss through Flowmeter	0.0	feet
'Add-on' Friction Losses	5.0	feet

Pipe Volumes

Vol of Transport Line	14.3	gals

Minimum Pump Requirements

Design Flow Rate	10.0	gpm
Total Dynamic Head	149.5	feet

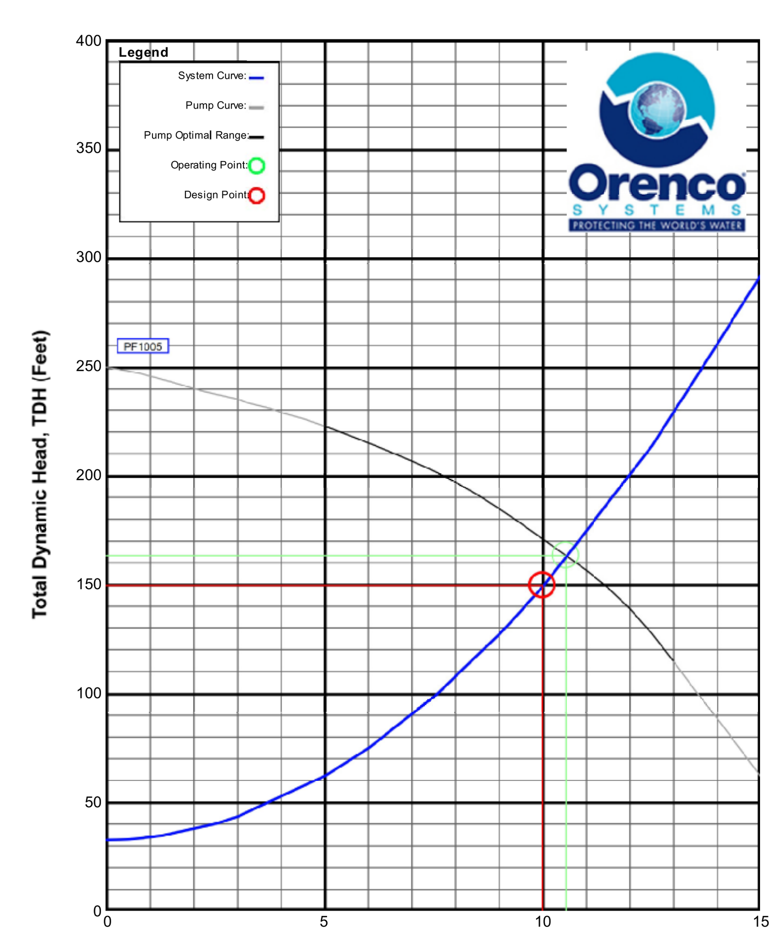

COUNTY E.H. ACCEPTANCE/APPROVAL STAMPS

BioSphere Consulting Incorporated — Alternative Wastewater System Design
• Site Evaluation & Mapping
• Soil Analysis & Percolation Testing
• New Development, Upgrade & Repairs
• Residential & Commercial
1315 King Street
Santa Cruz, CA 95060
Tel: (831) 430-9116
www.biosphere-consulting.com

PROFESSIONAL GEOLOGIST — ANDREW BROWNSTONE — No. 7453 — Exp. 12/31/23 — STATE OF CALIFORNIA

ONSITE WASTEWATER TREATMENT SYSTEM DESIGN PLAN

Project Location:	W Edmundson, Morgan Hill, California 95037 [Santa Clara County]
Property Owner:	Jim Hartigan
Mailing Address:	16428 Peacock Lane, Los Gatos, California 95032
Owner Phone #:	(408) 768-9343 email: jim@hartigan.net
Date: 11/21/22	**By:** David Quinn / Andrew Brownstone
REVISION:	**Job No.:** 22002 — **APN:** 767-19-034 — Sheet: 3 OF 3

THE USE OF THESE PLANS AND SPECIFICATIONS SHALL BE RESTRICTED TO THE ORIGINAL SITE FOR WHICH THEY WERE PREPARED AND PUBLICATION THEREOF IS EXPRESSLY LIMITED TO SUCH USE. REPRODUCTION OR PUBLICATION BY ANY METHOD, IN WHOLE OR PART, IS PROHIBITED. BIOSPHERE CONSULTING, INC. MAINTAINS TITLE OWNERSHIP OF THE PLANS AND SPECIFICATIONS WITHOUT PREJUDICE. VISUAL CONTACT WITH THESE PLANS AND SPECIFICATIONS SHALL CONSTITUTE PRIMA FACIE EVIDENCE OF THE ACCEPTANCE OF THESE RESTRICTIONS.