KENNY LN RESIDENCE LEGALIZATION

10315 KENNY LN SAN JOSE 95127

OFFICE OF COUNTY ASSESSOR — SANTA CLARA COUNTY, CALIFORNIA

BOOK	PAGE
612	14

PARCEL MAP

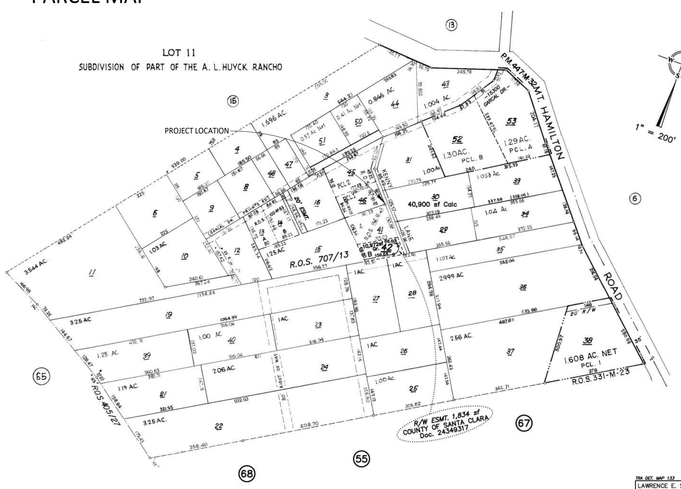

TRA DET. MAP 133
LAWRENCE E. STONE — ASSESSOR
Cadastral map for assessment purposes only.
Compiled under R. & T. Code, Sec. 327.
Effective Roll Year 2021–2022

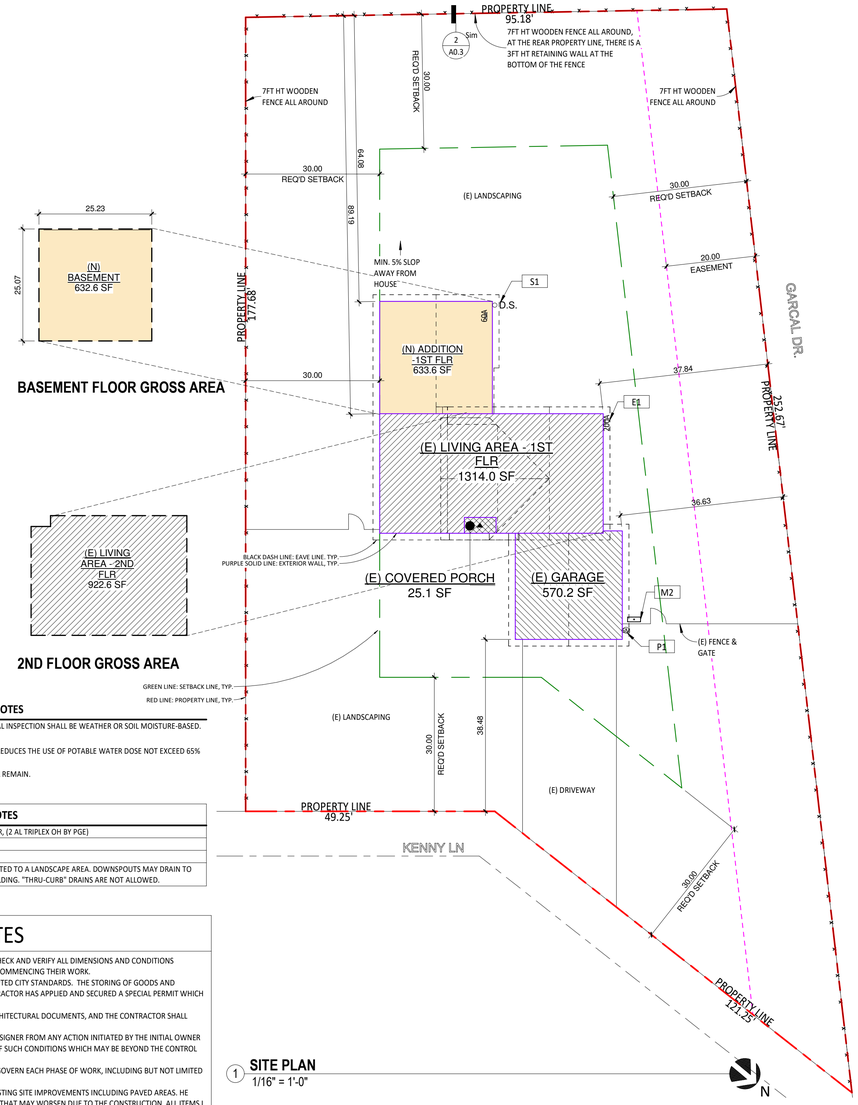

BASEMENT FLOOR GROSS AREA

2ND FLOOR GROSS AREA

1 **SITE PLAN**
1/16" = 1'-0"

SITE PLAN - GENERAL NOTES

1. AUTOMATIC IRRIGATION SYSTEMS CONTROLLERS INSTALLED AT THE TIME OF FINAL INSPECTION SHALL BE WEATHER OR SOIL MOISTURE-BASED.
2. A WATER BUDGET SHALL BE DEVELOPED FOR LANDSCAPE IRRIGATION.
3. CONTRACTOR PROVIDE WATER EFFICIENT LANDSCAPE IRRIGATION DESIGN THAT REDUCES THE USE OF POTABLE WATER DOSE NOT EXCEED 65% OF ETO TIMES THE LANDSCAPE AREA.
4. NO WORK IN FRONT YARD, (E) CONC. CURB CUT, (E) DRIVEWAY, (E) WALKWAY ALL REMAIN.

SITE PLAN - KEYED NOTES

E1	(E) 200AMP ELECTRIC PANEL & METER, (N) 200AMP ELECTRICAL PANEL & METER, (2 AL TRIPLEX OH BY PGE)
M2	(E) AC CONDENSER, SECURED ON 3" SLAB OR APPROVED PLATFORM
P1	(E) GAS METER & SHUT-OFF VALVE
S1	NEW RAINWATER DOWNSPOUTS SHALL BE DISCONNECTED AND RUNOFF DIRECTED TO A LANDSCAPE AREA. DOWNSPOUTS MAY DRAIN TO SPLASH BLOCKS OR COBBLESTONES THAT DIRECT WATER AWAY FROM THE BUILDING. "THRU-CURB" DRAINS ARE NOT ALLOWED.

NOTE TO CONTRACTOR:
THE CONTRACTOR AND/OR SUPPLIER OF MATERIALS SHALL NOT SCALE ANY DIMENSIONS FOR CONSTRUCTION PURPOSES. IN THE EVENT A DIMENSION IS REQUIRED THAT DOES NOT OCCUR ON THE DRAWINGS AND/OR A DIMENSION ERROR IS FOUND ON THE DRAWINGS. THE CONTRACTOR AND/OR SUPPLIER OF MATERIALS WILL NOTIFY THE PROJECT DESIGNER (KERELATION) AND REQUIRES ASSISTANCE AS SOON AS POSSIBLE. THE CONTRACTOR AND/OR SUPPLIER OF MATERIALS SHALL BE SOLELY RESPONSIBLE FOR THE RESULTS OF ERRORS, DISCREPANCIES AND OMISSIONS WHICH THE CONTRACTOR AND/OR MATERIAL SUPPLIER FAILED TO NOTIFY THE PROJECT DESIGNER (KERELATION) PRIOR TO CONSTRUCTION AND/OR FABRICATION OF THE WORK. NO DEVIATION FROM THE PLANS IN ANY WAY SHALL BE MADE WITHOUT THE WRITTEN CONSENT OF PROJECT DESIGNER (KERELATION). APPROVAL BY THE CITY INSPECTOR DOES NOT CONSTITUTE AUTHORITY TO DEVIATE FROM THE PLANS OR OTHER DOCUMENTS PROVIDED BY THE PROJECT DESIGNER (KERELATION).

GENERAL NOTES

1. IT IS THE RESPONSIBILITY OF THE GENERAL CONTRACTOR AND SUBCONTRACTOR TO CHECK AND VERIFY ALL DIMENSIONS AND CONDITIONS INDICATED ON THESE DRAWINGS AND MAKE KNOWN ANY DISCREPANCIES PRIOR TO COMMENCING THEIR WORK.
2. ALL PUBLIC IMPROVEMENTS SHALL BE MADE IN ACCORDANCE WITH THE LATEST ADOPTED CITY STANDARDS. THE STORING OF GOODS AND MATERIALS ON SIDEWALK AND/OR STREET WILL NOT BE ALLOWED UNLESS THE CONTRACTOR HAS APPLIED AND SECURED A SPECIAL PERMIT WHICH ALLOW SUCH STORAGE TO BE PLACED.
3. NO GUARANTEE OF QUALITY OF CONSTRUCTION IS IMPLIED OR INTENDED BY THE ARCHITECTURAL DOCUMENTS, AND THE CONTRACTOR SHALL ASSUME FULL RESPONSIBILITY FOR ANY OR ALL CONSTRUCTION DEFICIENCIES.
4. THE GENERAL CONTRACTOR SHALL HOLD HARMLESS, INDEMNIFY AND DEFEND THE DESIGNER FROM ANY ACTION INITIATED BY THE INITIAL OWNER OR ANY SUBSEQUENT OWNERS FOR CONSTRUCTION DEFICIENCIES, MODIFICATIONS OF SUCH CONDITIONS WHICH MAY BE BEYOND THE CONTROL OF THE DESIGNER.
5. ALL WORK SHALL COMPLY WITH APPLICABLE CODES AND TRADE STANDARDS WHICH GOVERN EACH PHASE OF WORK, INCLUDING BUT NOT LIMITED TO: 2019 CBC, CFC, CMC, CEC, AND CPC.
6. THE GENERAL CONTRACTOR SHALL REVIEW AND RECORD THE CONDITIONS OF ALL EXISTING SITE IMPROVEMENTS INCLUDING PAVED AREAS. HE SHALL MAKE KNOWN ALL EXISTING DAMAGED OR DISREPAIR ITEMS AND CONDITIONS THAT MAY WORSEN DUE TO THE CONSTRUCTION. ALL ITEMS I IN GOOD CONDITION SHALL BE MAINTAIN IN THEIR PRESENT CONDITION AND ANY ITEMS IN GOOD CONDITION SHALL BE MAINTAIN IN THEIR PRESENT CONDITION AND ANY REPAIR OR DAMAGE WHICH OCCURS DURING CONSTRUCTION SHALL BE THE RESPONSIBILITY OF THE CONTRACTOR.
7. GENERAL CONTRACTOR SHALL THOROUGHLY EXAMINE THE SITE AND SATISFY HIMSELF AS OF THE CONDITIONS UNDER WHICH THE WORK IS TO BE PERFORMED. THE CONTRACTOR SHALL VERIFY AT THE SITE ALL MEASUREMENTS AFFECTING HIS WORK AND SHALL BE RESPONSIBLE FOR THE CORRECTNESS OF SAME. NO EXTRA COMPENSATION WILL BE ALLOWED TO THE CONTRACTOR FOR THE EXPENSES DUE TO HIS NEGLECT TO EXAMINE OR FAILURE TO DISCOVER CONDITIONS WHICH MAY AFFECT HIS WORK.
8. ALL NEW INTERIOR PAINT SHALL USE LOW/NO-VOC PAINT .USE LOW/NO VOC ADHESIVES AND USE FSC CERTIFIED MATERIALS FOR INTER. COLOR, FLOOR, WALLS AND CEILING FINISHES SHALL BE SELECTED BY OWNER AT THE TIME WHEN IT IS NECESSARY FOR THE COMPLETION OF THE PROJECT.
9. ALL RESIDENTIAL BUILDINGS, NEW & ADDITION, SHALL COMPLETE WITH THE MANDATORY REQUIREMENTS OF 2019 CALIFORNIA GREEN BUILDING CODE.
10. THE BUILDING ADDRESS SHALL BE PLAINLY LEGIBLE AND VISIBLE FROM THE PUBLIC STREET. THERE NUMBERS SHALL CONTRAST WITH THEIR BACKGROUND.
11. FIRE DEPARTMENT ACCESS ROADWAY MUST BE PROVIDED AND MAINTAINED SERVICEABLE PRIOR TO AND DURING CONSTRUCTION.
12. TOPSOIL SHALL BE PROTECTED OR SAVED FOR REUSE AS SPECIFIED. TIER 1. DISPLACED TOPSOIL SHALL BE STOCKPILES FOR REUSE IN A DESIGNATED AREA AND COVERED OR PROTECTED FROM EROSION. TIER 2. THE CONSTRUCTION AREA SHALL BE IDENTIFIED AND DELINEATED BY FENCING OR FLAGGING TO LIMIT CONSTRUCTION ACTIVITY TO THE CONSTRUCTION AREA.
13. GENERAL CONTRACTOR SHALL VERIFY ALL UNDERGROUND UTILITY LOCATIONS PRIOR TO EXCAVATION, TRENCHING, OR GRADING OF ANY KIND. GENERAL CONTRACTOR SHALL COORDINATE WITH APPLICABLE UTILITY COMPANIES WHEN REROUTING ELECTRICAL, TELEPHONE, CABLE TV, GAS, WATER, SANITARY SEWER SERVICES, OR ANY OTHER UTILITY. G.C. SHALL MAINTAIN ALL ELECTRICAL AND COMMUNICATION SYSTEMS IN HOUSE AT ALL TIMES.
14. IN CASE OF ANY DISCREPANCY IN THE CONTRACT DOCUMENTS, CONSULT THE DESIGNER PROFESSIONALS BEFORE PROCEEDING.
15. GENERAL CONTRACTOR SHALL INSTALL ALL APPLIANCES SPECIFIED AND ALL NEW EQUIPMENT ACCORDING TO MANUFACTURER'S INSTRUCTIONS.
16. WEATHER-STRIP ALL EXTERIOR DOORS AND WINDOWS.
17. CAULK OR OTHERWISE SEAL AROUND ALL OPENINGS TO LIMIT INFILTRATION, INCLUDING BUT NOT LIMITED TO: EXTERIOR JOINTS AROUND WINDOWS AND DOOR FRAMES, BETWEEN SOLE PLATES AND FLOORS AND BETWEEN EXTERIOR WALL PANELS.
18. GENERAL CONTRACTOR SHALL VERIFY THAT ALL WORK ON THE EXTERIOR OF THE PROJECT IS WATERTIGHT. ALL JOINTS EXPOSED TO THE ELEMENTS SHALL BE TESTED FOR WATER TIGHTNESS PRIOR TO SUBSTANTIAL COMPLETION.
19. ADDRESS IDENTIFICATION CFC 505.1 4 .
APPROVED NUMBERS OR ADDRESSES SHALL BE PLACED ON ALL NEW AND EXISTINGBUILDINGS IN SUCH A POSITION AS TO BE PLAINLY VISIBLE AND L EGIBLE FROM THE STREET OR ROAD FRONTING THE PROPERTY.THESE NUMBERS SHALL CONTRAST WITH THEIR BACKGROUND.

SYMBOL

EXTERIOR SECTION: SIM — 1 / A101 — SECTION NUMBER / SHEET NUMBER

INTERIOR ELEVATION: 1 / A-603 / 2 / 3 / 4 — ELEVATION NUMBER / SHEET NUMBER

ENLARGED PLAN DETAIL: 1 / A6.2 — DETAIL NUMBER / SHEET NUMBER

KEYED NOTE: 1

DRAWING REVISIONS: CLOUD INDICATES EXTENT OF REVISION ON SHEET; 1 — REVISION NUMBER (SEE TITLEBLOCK FOR DATE & ISSUE INFORMATION)

CENTERLINE: ℄

ROOM IDENTIFICATION: BATHROOM → ROOM NAME; TILE → FINISH MATERIAL

CONSTRUCTION DETAIL: 1 / A6.2 — DETAIL NUMBER / SHEET NUMBER

DOOR IDENTIFICATION: 2'-6"X6'-8" SIZE TAG 101

WINDOW IDENTIFICATION: 4'-0"X3'-0" SIZE TAG A

ALIGN SURFACES:

BREAKLINE:

ABBREVIATION

ALT.	Alternate	(R)	REMODEL /RELOCATED /REPLACED
BLKG	Blocking		
BM	Beam		
CONT.	Continuous		
CONC.	Concrete		
DCKG	Decking		
DIA.	Diameter		
(E)	Existing		
EA.	Each		
ETC.	Etcetera		
EXT.	Exterior		
FLR	Floor		
FNDN	Foundation		
FRMG	Framing		
FTG	Footing		
GA.	Gauge		
GALV.	Galvanized		
G.B.	Gypsum Board		
MFR.	Manufacturer		
(N)	New		
O.C.	On Center		
OPNG	Opening		
PLYWD	Plywood		
P.T.	Pressure Treated		
RDWD	Redwood		
REQ'D	Required		
RET.	Retaining		
SIM.	Similar		
SSD	See Structural Document		
TYP.	Typical		
U.O.N.	Unless Otherwise Noted		
V.I.F.	Verify In Field (by GC)		

GRADING QUANTITIES:

(N) BASEMENT WAS RENOVATED BASED ON EXISTING CRAWL SPACE. ESTIMATE CUT FOR NEW FOUNDATION ONLY: 5 CUBIC YARDS.

VICINITY MAP

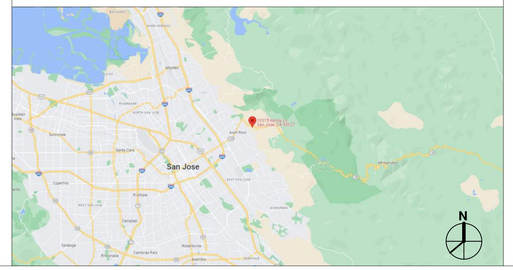

SCOPE OF WORK

CODE VIOLATION CASE # VIO20-0040

TOTAL 1266.2 SF ADDITION TO AN EXISTING TWO STORY HOUSE. ADD A (N) FAMILY ROOM ON 1ST FLOOR. ADD A BASEMENT INCLUDING A (N) BATHROOM, (N) BEDROOM, & (N) DEN.

* NO CHANGE TO EXISTING GARAGE, 2ND FLOOR AND EXISTING ROOFS.

PROJECT DATA

10315 KENNY LN SAN JOSE 95127

APN: 612-14-045
ZONING: RR-D1
LOT AREA: 21780 SF

OWNER:
NIRVANA PROPERTY LLC
5441 Country Club Pkwy,
San Jose, CA 95138
TEL: 714-277-7765
benmoshe11111@gmail.com

 # OF STORIES: 2
BLDG HEIGHT: 22' - 5 1/2"
USE: SFR
OCCUPANCY GROUP: R3/U
CONSTRUCTION TYPE: VB (NO FIRE SPRINKLER)

PROJECT TEAM

PROJECT DESIGNER:
GUANGJIE ZOU, PM
KERELATION LLC.
3190 VERDANT WAY
SAN JOSE, CA 95117
TEL: 408-551-0705
kerelationllc@gmail.com

STRUCTURAL ENGINEER:
JUAN ALEMAN, PHD, PE
PRINCIPAL
TANGObuilder
2261 MARKET ST #4004
SAN FRANCISCO, CA 94114
TEL: 650-677-1513
juan@tangobuilder.com

ENERGY CONSULTANT:
TIMOTHY CARSTAIRS
CARSTAIRS ENERGY INC.
2238 BAYVIEW HEIGHTS DRIVE,
SUITE E
LOS OSOS, CA 93402
TEL: 805-904-9048
title24@yahoo.com

LOT AREA: 21780 SF

CODE & ORDINANCE

FLOOR AREA RATIO & LOT COVERAGE

(E) GROSS FLOOR AREA

(E) LIVING AREA -1ST FLR	1311.4 SF
(E) LIVING AREA -2ND FLR	922.6 SF
(E) GARAGE	570.2 SF
(E) COVERED PORCH	25.1 SF
	2829.3 SF

PROPOSED GROSS FLOOR AREA

(E) LIVING AREA - 1ST FLR	1314.0 SF
(N) ADDITION -1ST FLR	633.6 SF
(E) LIVING AREA - 2ND FLR	922.6 SF
(N) BASEMENT	632.6 SF
(E) GARAGE	570.2 SF
(E) COVERED PORCH	25.1 SF
	4098.1 SF

DRAWING INDEX

--- ARCHITECTURAL ---	
A0.1	COVERSHEET & SITE PLAN
A0.2	3D BIRDVIEWS
A0.3	DEMO PLAN & FENCE DETAIL
A0.4	CAL GREEN CHECKLIST
A0.5	CAL GREEN CHECKLIST (CONT.) & INTERIOR SPECS
A0.6	CLEAN BAY BLUE PRINT
A2.1	PROPOSED 1ST FLOOR & BASEMENT PLAN
A2.2	PROPOSED 2ND FLOOR PLAN
A2.3	PROPOSED ROOF PLAN & ROOF DETAILS
A3	BUILDING SECTIONS & DETAILS
A4.1	EXTERIOR ELEVATIONS
A4.2	EXTERIOR ELEVATIONS
A4.3	EXTERIOR ELEVATIONS
A5	PROPOSED REFLECTED CEILING & POWER PLANS
A6	DETAILS
A8	COLOR /MATERIALS BOARD
--- ENERGY REPORT ---	
T24.1	ENERGY REPORT - CF1R-PRF-01
T24.2	ENERGY REPORT - CF1R-PRF-01 & RMS
--- STRUCTURAL ---	
S001	COVER & DRAWING LIST
S002	GENERAL NOTES
S003	GENERAL NOTES
S200	STRUCTURAL PLAN VIEWS AND ELEVATIONS
S201	STRUCTURAL PLAN VIEWS AND ELEVATIONS
S202	STRUCTURAL PLAN VIEWS AND ELEVATIONS
S203	STRUCTURAL PLAN VIEWS AND ELEVATIONS
S400	STRUCTURAL TYPICAL REINFORCEMENT DETAILS
S401	FOUNDATION DETAILS
S402	FOUNDATION DETAILS
S601	LIGHT-FRAMING DETAILS
S602	LIGHT-FRAMING DETAILS
S603	LIGHT-FRAMING DETAILS
S604	LIGHT-FRAMING DETAILS
WSWH1	STRONG WALL DETAILS
WSWH2	STRONG WALL DETAILS
WSWH4	STRONG WALL DETAILS

BUILDING SETBACKS

SETBACK:	REQUIRED:	EXISTING/PROPOSED :
FRONT	30'	(E) 38.48', NO CHANGE
SIDE	30'	(E) LEFT: 30', NO CHANGE
		(E) RIGHT: 36.63', NO CHANGE
REAR	30'	(E) 89.19', (N) 64.08'

BUILDING CODES

THE PROJECT SHALL MEET ALL OF THE FOLLOWING CODE:

2019 California Residential Code
2019 California Mechanical Code
2019 California Plumbing Code
2019 California Electrical Code
2019 California Green Building Code (CalGreen)
2019 California Fire Code (with local amendments)
2019 State of California Title 24 Energy Regulations
COUNTY Code of SANTA CLARA
(including local amendments to the above adopted codes and local green building requirements)

KERELATION LLC
Building, Design, Planning, Environment & BIM
-Your Virtual Design and Construction Manager-
3190 VERDANT WAY, SAN JOSE, CA 95117
TEL: 408.551.0705
EMAIL: hello@kerelation.com

COPYRIGHT © 2022

KENNY LN RESIDENCE LEGALIZATION

NIRVANA PROPERTY LLC
10315 KENNY LN SAN JOSE 95127

No.	Description	Date
	PLN REVIEW SUBMISSION	05.31.22
	OWNER REVIEW/CONF'N	06.04.22
	ISSUED FOR PLAN CHECK	08.01.22

COVERSHEET & SITE PLAN

SCALE	As indicated
PROJECT NO	220423
SHEET NUMBER	A0.1

COPYRIGHT © 2022 KERELATION LLC

3D BIRDVIEW (FRONT-LEFT)

3D BIRDVIEW (FRONT-RIGHT)

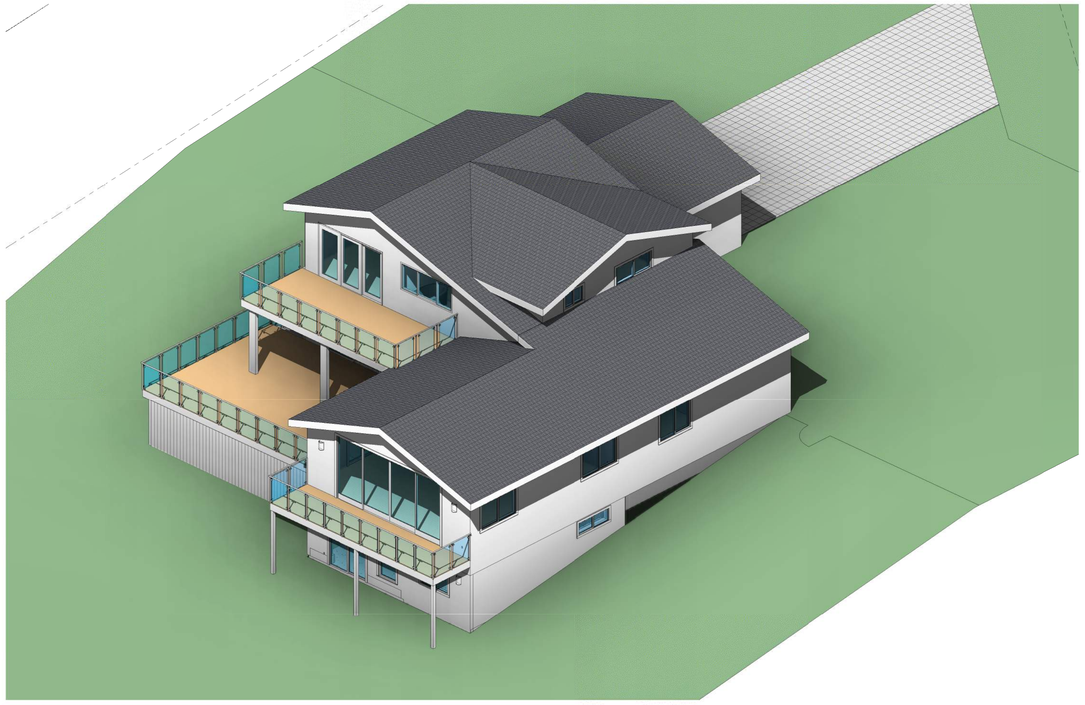

3D BIRDVIEW (REAR-LEFT)

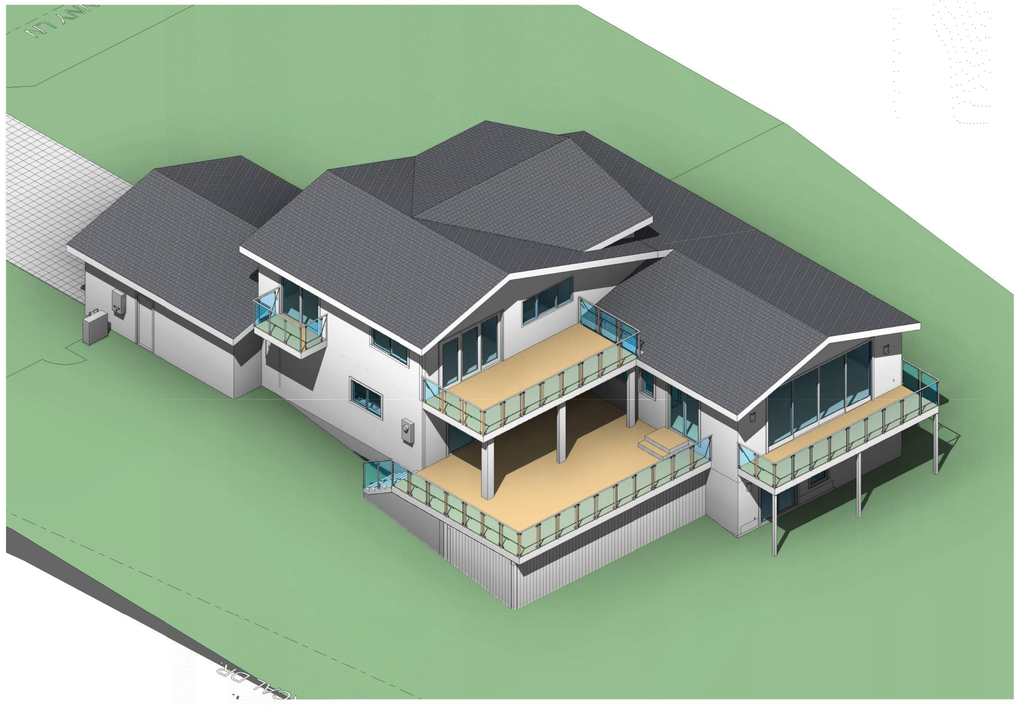

3D BIRDVIEW (REAR-RIGHT)

KERELATION LLC
Building, Design, Planning, Environment & BIM
-Your Virtual Design and Construction Manager-
3190 VERDANT WAY, SAN JOSE, CA 95117
TEL: 408.551.0705
EMAIL: hello@kerelation.com
COPYRIGHT © 2022

KENNY LN RESIDENCE LEGALIZATION

NIRVANA PROPERTY LLC
10315 KENNY LN SAN JOSE 95127

No.	Description	Date
	ISSUED FOR PLAN CHECK	08.01.22

3D BIRDVIEWS

SCALE

PROJECT NO 220423

SHEET NUMBER A0.2

COPYRIGHT © 2022 KERELATION LLC

Santa Clara County REBUILD Determination and Points Allocation [1]

A. Existing Residence

1a Footings[3]	Existing L.F.[2]	New/modified or Removed L.F.	Ratio	Maximum Points	Resulting Points
	209.51	75.37	0.36		
1b Slab - structural slabs and basement areas	Existing Area	Replaced/ Modified Area	Ratio		
	570.2	0	0.00		
Subtotal				25	8.99
2 Walls - interior and exterior in linear feet[4]	Existing L.F.[2]	New/modified or Removed L.F.	Ratio	Maximum Points	Resulting Points
	800.125	541.395	0.68	50	33.83
3 Roof[5]	Existing S.F.	new, replaced, altered or removed Roof S.F.	Ratio	Maximum Points	Resulting Points
	2579	773	0.30	25	7.49
Existing Residence Subtotal					50.32

B. Proposed Additions

	Area in S.F.	Ratio 1 pt/ 40 S.F. [8]	Sub-Total Points
First floor and upper story additions[6,7]	633.6	16.00	16

C. Cumulative rebuild points from permits issued within last 2 years:	0
TOTAL POINT ALLOCATION[9]	66.32

WALL LENGTH CALCULATIONS:

EXISTING WALLS (EXTERIOR & INTERIOR): 800.125 L.F.

REMOVED WALLS (EXTERIOR & INTERIOR): 64.020 L.F.

NEW WALLS (EXTERIOR & INTERIOR): 477.375 L.F.

ROOF AREA CALCULATIONS:

EXISTING ROOF AREA: 2579 S.F.

NEW ROOF AREA: 773 S.F.

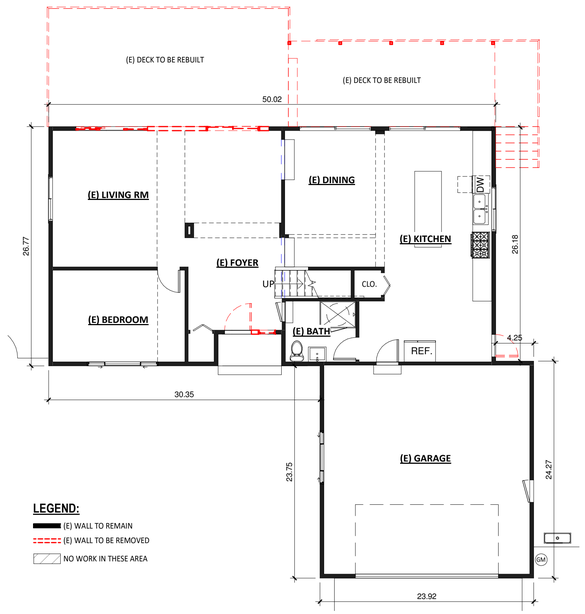

1 **DEMO PLAN (FLOOR)**
1/8" = 1'-0"

DEMO PLAN - GENERAL NOTES

1 CONTRACTOR SHALL PATCH AND REPAIR ALL CONSTRUCTION SCHEDULED TO REMAIN WHICH IS AFFECTED DURING DEMOLITION.
2 RECYCLE AND/OR SALVAGE FOR REUSE A MINIMUM OF 65% OF THE NONHAZARDOUS CONSTRUCTION AND DEMOLITION WASTE.
3 SALVAGE REUSABLE BUILDING MATERIALS.
4 MINIMIZE DISRUPTION OF EXISTING PLANTS & TREES.

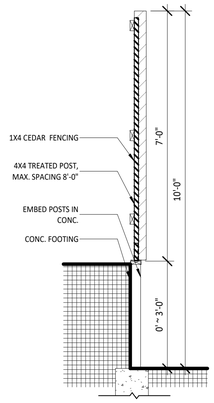

2 **TYP. WOOD FENCE**
1/2" = 1'-0"

KERELATION LLC
Building, Design, Planning, Environment & BIM
-Your Virtual Design and Construction Manager-
3190 VERDANT WAY, SAN JOSE, CA 95117
TEL: 408.551.0705
EMAIL: hello@kerelation.com

COPYRIGHT © 2022

KENNY LN RESIDENCE LEGALIZATION

NIRVANA PROPERTY LLC
10315 KENNY LN SAN JOSE 95127

No.	Description	Date
	PLN REVIEW SUBMISSION	05.31.22
	ISSUED FOR PLAN CHECK	08.01.22

DEMO PLAN & FENCE DETAIL

SCALE	As indicated
PROJECT NO	220423
SHEET NUMBER	A0.3

COPYRIGHT © 2022 KERELATION LLC

2019 CALGREEN RESIDENTIAL MANDATORY MEASURES
EFFECTIVE JANUARY 1, 2020
HCD SHL 615 (New 01/20)

See specific referenced sections for complete details on CALGreen mandatory requirements.

2019 CALGREEN CODE

SECTION	REQUIREMENTS
4.106.4.2.1	**EV charging space (EV space) locations** Construction documents shall indicate the location of proposed EV spaces. Where common use parking is provided at least 1 EV space shall be located in the common use parking areas and shall be available for use by all residents.
4.106.4.2.1.1	**EV charging stations (EVCS)** When EV chargers are installed, EV spaces (required by Section 4.106.4.2.2, Item 3,) shall comply with at least 1 of the following options: 1. The EV space shall be located adjacent to an accessible parking space meeting the requirements of the California Building Code, Chapter 11A, to allow use of the EV charger from the accessible parking space. 2. The EV space shall be located on an accessible route to the building, as defined in the California Building Code, Chapter 2. **Exception:** EVCS designed and constructed in compliance with the California Building Code Chapter 11B are not required to comply with Section 4.106.4.2.1.1 and Section 4.106.4.2.2, Item 3.
4.106.4.2.2	**EV charging space (EV space) dimensions** EV spaces shall be designed to comply with the following: 1. The minimum length of each EV space shall be 18 feet. 2. The minimum width of each EV space shall be 9 feet. 3. 1 in every 25 EV spaces, but not less than 1, shall also have an 8-foot wide minimum aisle. A 5-foot wide minimum aisle shall be permitted provided the minimum width of the EV space is 12 feet. a. Surface slope for this EV space and aisle shall not exceed 1 unit vertical in 48 units horizontal (2.083% slope) in any direction.

Page 4 of 16

2019 CALGREEN RESIDENTIAL MANDATORY MEASURES
EFFECTIVE JANUARY 1, 2020
HCD SHL 615 (New 01/20)

See specific referenced sections for complete details on CALGreen mandatory requirements.

2019 CALGREEN CODE

SECTION	REQUIREMENTS
4.106.4.1	**EV charging: 1- & 2-family dwellings/townhouses with attached private garages** • Install a listed raceway to accommodate a dedicated 208/240-volt branch circuit for each dwelling unit. • Raceway shall not be less than trade size 1 (nominal 1-inch inside diameter). • Raceway shall originate at the main service or subpanel and terminate into a listed cabinet, box or other enclosure in close proximity to the proposed location of an EV charger. • Raceways are required to be continuous at enclosed, inaccessible, or concealed areas and spaces. • Service panel and/or subpanel shall provide capacity to install a 40-ampere minimum dedicated branch circuit and space(s) reserved to permit installation of a branch circuit overcurrent protective device.
4.106.4.1.1	**Identification** Service panel or subpanel circuit directory shall identify the overcurrent protective device space(s) reserved for future EV charging as "EV CAPABLE". The raceway termination location shall be permanently and visibly marked as "EV CAPABLE."
4.106.4.2	**EV charging for multifamily dwellings** • Applies to all multifamily dwelling units with parking facilities on the site. • 10% of the total number of parking spaces provided for all types of parking facilities, but in no case less than 1, shall be electric vehicle charging spaces (EV spaces) capable of supporting future EVSE. Calculations for the number of EV spaces shall be rounded up to the nearest whole number. **Note:** Construction documents are intended to demonstrate the project's capability and capacity for facilitating future EV charging. There is no requirement for EV spaces to be constructed or available until EV chargers are installed for use.

Page 3 of 16

2019 CALGREEN RESIDENTIAL MANDATORY MEASURES
EFFECTIVE JANUARY 1, 2020
HCD SHL 615 (New 01/20)

See specific referenced sections for complete details on CALGreen mandatory requirements.

2019 CALGREEN CODE

SECTION	REQUIREMENTS	
	Chapter 4 – RESIDENTIAL MANDATORY MEASURES	
	Division 4.1 – PLANNING AND DESIGN	
4.106.2	**Storm water drainage and retention during construction** Projects which disturb less than 1 acre of soil and are not part of a larger common plan of development shall manage storm water drainage during construction.	GEN. NOTES #14, SHEET A2.1
4.106.3	**Grading and paving** Construction plans shall indicate how the site grading or drainage system will manage all surface water flows to keep water from entering buildings. **Exception:** Additions and alterations which do not alter the existing drainage path.	5% AWAY SLOPE ON SITE PLAN, SHEET A1
4.106.4	**Electric vehicle (EV) charging for new construction** • Comply with Section 4.106.4.1, 4.106.4.2 or 4.106.4.3 for future installation and use of EV chargers. • Electric vehicle supply equipment (EVSE) shall be installed in accordance with the California Electrical Code, Article 625. **Exceptions:** 1. On a case-by-case basis where the local enforcing agency has determined EV charging and infrastructure are not feasible based upon 1 of the following: 1.1. Where there is no commercial power supply. 1.2. Verification that meeting requirements will alter the local utility infrastructure design requirements on the utility side of the meter increasing costs to the homeowner/developer by more than $400.00 per dwelling unit. 2. Accessory Dwelling Units and Junior Accessory Dwelling Units without additional parking facilities. **Note:** For definitions of Accessory Dwelling Units and Junior Accessory Units, see CALGreen Chapter 2.	

Page 2 of 16

2019 CALGREEN RESIDENTIAL MANDATORY MEASURES
EFFECTIVE JANUARY 1, 2020
HCD SHL 615 (New 01/20)

See specific referenced sections for complete details on CALGreen mandatory requirements.

2019 CALGREEN CODE

SECTION	REQUIREMENTS
	Chapter 1 – ADMINISTRATION
101.3.1	**Scope** Applies to ALL newly constructed residential buildings: low-rise, high-rise, and hotels/motels.
102.3	Requires a completed Residential Occupancies Application Checklist or alternate method acceptable to the enforcing agency to be used for documentation of conformance.
	Chapter 3 – GREEN BUILDING
301.1.1	**Additions and alterations** • Applies to additions or alterations of residential buildings where the addition or alteration increases the building's conditioned area, volume, or size. • Requirements only apply within the specific area of the addition or alteration.
301.2	**Low-rise and high-rise residential buildings** Banners identify provisions applying to low-rise only [LR] or high-rise only [HR].
302.1	**Mixed occupancy buildings** Requires each portion of mixed occupancy buildings to comply with CALGreen measures applicable for the specific occupancy. **Exceptions:** • Accessory structures and accessory occupancies serving residential buildings to comply with Chapter 4 and Appendix A4, as applicable. • Live/work units complying with the California Building Code Section 419 shall not be considered a mixed occupancy. Live/work units are required to comply with Chapter 4 and Appendix A4, as applicable.

Page 1 of 16

2019 CALGREEN RESIDENTIAL MANDATORY MEASURES
EFFECTIVE JANUARY 1, 2020
HCD SHL 615 (New 01/20)

See specific referenced sections for complete details on CALGreen mandatory requirements.

2019 CALGREEN CODE

SECTION	REQUIREMENTS	
	Division 4.3 – WATER EFFICIENCY AND CONSERVATION	
4.303.1	**Water conserving plumbing fixtures and fittings** Plumbing fixtures and fittings shall comply with the following: **4.303.1.1** – Water closets: ≤ 1.28 gal/flush. **4.303.1.2** – Wall mounted urinals: ≤ 0.125 gal/flush; all other urinals ≤ 0.5 gal/flush. **4.303.1.3.1** – Single showerheads: ≤ 1.8 gpm @ 80 psi. **4.303.1.3.2** – Multiple showerheads: combined flow rate of all showerheads controlled by a single valve shall not exceed 1.8 gpm @ 80 psi, or only 1 shower outlet is to be in operation at a time. **4.303.1.4.1** – Residential lavatory faucets: maximum flow rate ≤ 1.2 gpm @ 60 psi; minimum flow rate ≥ 0.8 gpm @ 20 psi. **4.303.1.4.2** – Lavatory faucets in common and public use areas of residential buildings: ≤ 0.5 gpm @ 60 psi. **4.303.1.4.3** – Metering faucets: ≤ 0.2 gallons per cycle. **4.303.1.4.4** – Kitchen faucets: ≤ 1.8 gpm @ 60 psi; temporary increase to 2.2 gpm allowed but shall default to 1.8 gpm.	GEN. NOTES #7, SHEET A2.1, FLR PLAN
4.303.2	**Standards for plumbing fixtures and fittings** Plumbing fixtures and fittings shall be installed in accordance with the California Plumbing Code, and shall meet applicable standards referenced in Table 1701.1 of the California Plumbing Code.	GEN. NOTES #8, SHEET A2.1, FLR PLAN
4.304.1	**Outdoor potable water use in landscape areas** New residential developments shall comply with a local water efficient landscape ordinance or the current California Department of Water Resources' Model Water Efficient Landscape Ordinance (MWELO), whichever is more stringent.	NOT NEW DEVELOPMENT. A0.1 SITE PLAN NOTE
	Division 4.4 – MATERIAL CONSERVATION & RESOURCE EFFICIENCY	
4.406.1	**Rodent proofing** Annular spaces around pipes, electric cables, conduits or other openings in sole/bottom plates at exterior walls shall be closed with cement mortar, concrete masonry or a similar method acceptable to the enforcing agency to prevent passage of rodents.	GEN. NOTES #11, SHEET A2.1, FLOOR PLAN

Page 8 of 16

2019 CALGREEN RESIDENTIAL MANDATORY MEASURES
EFFECTIVE JANUARY 1, 2020
HCD SHL 615 (New 01/20)

See specific referenced sections for complete details on CALGreen mandatory requirements.

2019 CALGREEN CODE

SECTION	REQUIREMENTS
4.106.4.3.4	**Multiple EV spaces required (similar to 4.106.4.2.4)** • Construction documents shall indicate the raceway termination point and proposed location of future EV spaces and EV chargers. Construction documents shall also provide information on amperage of future EVSE, raceway method(s), wiring schematics and electrical load calculations to verify electrical panel service capacity and electrical system, including any on-site distribution transformer(s), have sufficient capacity to simultaneously charge all EVs at all required EV spaces at the full rated amperage of the EVSE. • Plan design shall be based upon a 40-ampere minimum branch circuit. • Required raceways and related components planned to be installed underground, enclosed, inaccessible or, in concealed areas and spaces shall be installed at the time of original construction.
4.106.4.3.5	**Identification (similar to 4.106.4.2.5)** Service panel or subpanel circuit directory shall identify the overcurrent protective device space(s) reserved for future EV charging purposes as "EV CAPABLE" in accordance with the California Electrical Code.
4.106.4.3.6	**Accessible EV spaces** In addition to the requirements in Section 4.106.4.3, EV spaces for hotels/motels and all EVSE, when installed, shall comply with the accessibility provisions for EV charging stations in the California Building Code, Chapter 11B.
	Division 4.2 – ENERGY EFFICIENCY
4.201.1 & 5.201.1	**Scope** • Energy efficiency requirements for low-rise residential (Section 4.201.1) and high-rise residential/hotels/motels (Section 5.201.1) are now in both residential and nonresidential chapters of CALGreen. • Standards for residential buildings do not require compliance with levels of minimum energy efficiency beyond those required by the 2019 California Energy Code.

YES, T-24A, PG#1

Page 7 of 16

2019 CALGREEN RESIDENTIAL MANDATORY MEASURES
EFFECTIVE JANUARY 1, 2020
HCD SHL 615 (New 01/20)

See specific referenced sections for complete details on CALGreen mandatory requirements.

2019 CALGREEN CODE

SECTION	REQUIREMENTS
4.106.4.3	**EV charging for hotels and motels** • Applies to all newly constructed hotels and motels. • Construction documents shall identify the location of EV spaces. **Note:** Construction documents are intended to demonstrate the project's capability and capacity for facilitating future EV charging. There is no requirement for EV spaces to be constructed or available until EV chargers are installed for use.
4.106.4.3.1	**Number of required EV spaces** **Table 4.106.4.3.1** shows the number of required EV spaces based on the total number of parking spaces provided for all types of parking facilities.
4.106.4.3.2	**EV charging space (EV space) dimensions** EV spaces shall be designed to comply with the following: • Minimum length of each EV space shall be 18 feet. • Minimum width of each EV space shall be 9 feet.
4.106.4.3.3	**Single EV space required (similar to 4.106.4.2.3)** • Install a listed raceway capable of accommodating a 208/240-volt dedicated branch circuit. • Raceway shall not be less than trade size 1 (nominal 1-inch inside diameter). • Raceway shall originate at the main service or subpanel and shall terminate into a listed cabinet, box or enclosure in close proximity to the proposed location of the EV space. • Construction documents shall identify the raceway termination point. • Service panel and/or subpanel shall provide capacity to install a 40-ampere minimum dedicated branch circuit and space(s) reserved to permit installation of a branch circuit overcurrent protective device.

Page 6 of 16

2019 CALGREEN RESIDENTIAL MANDATORY MEASURES
EFFECTIVE JANUARY 1, 2020
HCD SHL 615 (New 01/20)

See specific referenced sections for complete details on CALGreen mandatory requirements.

2019 CALGREEN CODE

SECTION	REQUIREMENTS
4.106.4.2.3	**Single EV space required** • Install a listed raceway capable of accommodating a 208/240-volt dedicated branch circuit. • Raceway shall not be less than trade size 1 (nominal 1-inch inside diameter). • Raceway shall originate at the main service or subpanel and shall terminate into a listed cabinet, box or enclosure in close proximity to the proposed location of the EV space. • Construction documents shall identify the raceway termination point. • Service panel and/or subpanel shall provide capacity to install a 40-ampere minimum dedicated branch circuit and space(s) reserved to permit installation of a branch circuit overcurrent protective device.
4.106.4.2.4	**Multiple EV spaces required** • Construction documents shall indicate the raceway termination point and proposed location of future EV spaces and EV chargers. Construction documents shall also provide information on amperage of future EVSE, raceway method(s), wiring schematics, and electrical load calculations to verify electrical panel service capacity and electrical system, including any on-site distribution transformer(s), have sufficient capacity to simultaneously charge all EVs at all required EV spaces at the full rated amperage of the EVSE. • Plan design shall be based upon a 40-ampere minimum branch circuit. • Required raceways and related components planned to be installed underground, enclosed, inaccessible or in concealed areas and spaces shall be installed at the time of original construction.
4.106.4.2.5	**Identification** Service panel or subpanel circuit directory shall identify the overcurrent protective device space(s) reserved for future EV charging purposes as "EV CAPABLE" in accordance with the California Electrical Code.

Page 5 of 16

2019 CALGREEN RESIDENTIAL MANDATORY MEASURES
EFFECTIVE JANUARY 1, 2020
HCD SHL 615 (New 01/20)

See specific referenced sections for complete details on CALGreen mandatory requirements.

2019 CALGREEN CODE

SECTION	REQUIREMENTS	
4.504.1	**Protection of mechanical equipment during construction** At the time of rough installation, during storage on the construction site and until final startup of the heating, cooling and ventilating equipment, all duct and other related air intake and distribution component openings shall be covered. Tape, plastic, sheetmetal or other methods acceptable to the enforcing agency to reduce the amount of water, dust and debris entering the system may be used.	SEE INTERIOR SPECIFICATIONS, SHEET A0.5
4.504.2.1	**Adhesives, sealants and caulks** Adhesives, sealants and caulks used on the project shall meet the requirements of the following standards unless more stringent local or regional air pollution or air quality management district rules apply: 1. Adhesives, adhesive bonding primers, adhesive primers, sealants, sealant primers, and caulks shall comply with local or regional air pollution control or air quality management district rules where applicable or SCAQMD Rule 1168 VOC limits, as shown in Table 4.504.1 or 4.504.2, as applicable. Such products shall also comply with the Rule 1168 prohibition on the use of certain toxic compounds (chloroform, ethylene dichloride, methylene chloride, perchloroethylene and trichloroethylene), except for aerosol products, as specified in Subsection 2. 2. Aerosol adhesives, and smaller unit sizes of adhesives, and sealant or caulking compounds (in units of product, less packaging, which do not weigh more than 1 pound and do not consist of more than 16 fluid ounces) shall comply with statewide VOC standards and other requirements, including prohibitions on use of certain toxic compounds, of California Code of Regulations (CCR), Title 17, commencing with Section 94507.	SEE INTERIOR SPECIFICATIONS, SHEET A0.5
4.504.2.2	**Paints and coatings** Architectural paints and coatings shall comply with VOC limits in Table 1 of the Air Resources Board Architectural Suggested Control Measure, as shown in Table 4.504.3, unless more stringent local limits apply. The VOC content limit for coatings that do not meet the definitions for the specialty coatings categories listed in Table 4.504.3 shall be determined by classifying the coating as a Flat, Nonflat, or Nonflat-high Gloss coating, based on its gloss, as defined in subsections 4.21, 4.36, and 4.37 of the 2007 California Air Resources Board, Suggested Control Measure, and the corresponding Flat, Nonflat, or Nonflat-high Gloss VOC limit in Table 4.504.3 shall apply.	SEE INTERIOR SPECS. ON SHEET A0.5

Page 11 of 16

2019 CALGREEN RESIDENTIAL MANDATORY MEASURES
EFFECTIVE JANUARY 1, 2020
HCD SHL 615 (New 01/20)

See specific referenced sections for complete details on CALGreen mandatory requirements.

2019 CALGREEN CODE

SECTION	REQUIREMENTS	
4.408.4 & 4.408.4.1	**Waste stream reduction alternative [LR]** • Projects that generate a total combined weight of construction and demolition waste disposed in landfills, which do not exceed 3.4 pounds per square foot of the building area shall meet the minimum 65% construction waste reduction requirement in Section 4.408.1. • Projects that generate a total combined weight of construction and demolition waste disposed in landfills, which do not exceed 2 pounds per square foot of the building area, shall meet the minimum 65% construction waste reduction requirement in Section 4.408.1.	GEN. NOTES #23 SHEET A2.1, FLR PLAN GEN. NOTES #24 SHEET A2.1, FLR PLAN
4.410.1	**Operation and maintenance manual** At the time of final inspection, a manual, compact disc, web-based reference or other media acceptable to the enforcing agency which covers 10 specific subject areas shall be placed in the building.	GEN. NOTES #13, SHEET A2.1, FLR PLAN
4.410.2	**Recycling by occupants** Where 5 or more multifamily dwelling units are constructed on a building site, provide readily accessible area(s) that serves all buildings on the site and is identified for the depositing, storage and collection of nonhazardous materials for recycling, including (at minimum) paper, corrugated cardboard, glass, plastics, organic waste, and metals, or meet a lawfully enacted local recycling ordinance, if more restrictive. **Exception:** Rural jurisdictions that meet and apply for the exemption in Public Resources Code Section 42649.82 (a)(2)(A) et seq. are not required to comply with the organic waste portion of this section.	
	Division 4.5 – ENVIRONMENTAL QUALITY	
4.503.1	**Fireplaces - General** Any installed gas fireplace shall be a direct-vent sealed-combustion type. Any installed woodstove or pellet stove shall comply with U.S. EPA New Source Performance Standards (NSPS) emission limits as applicable, and shall have a permanent label indicating they are certified to meet the emission limits. Woodstoves, pellet stoves, and fireplaces shall also comply with all applicable local ordinances.	

Page 10 of 16

2019 CALGREEN RESIDENTIAL MANDATORY MEASURES
EFFECTIVE JANUARY 1, 2020
HCD SHL 615 (New 01/20)

See specific referenced sections for complete details on CALGreen mandatory requirements.

2019 CALGREEN CODE

SECTION	REQUIREMENTS	
4.408.1	**Construction waste management** • Recycle and/or salvage for reuse a minimum of 65% of the nonhazardous construction and demolition waste in accordance with either Section 4.408.2, 4.408.3 or 4.408.4, or meet a more stringent local construction and demolition waste management ordinance. • Provide documentation to the enforcing agency per Section 4.408.5. **Exceptions:** 1. Excavated soil and land-clearing debris. 2. Alternative waste reduction methods developed by working with local enforcing agencies if diversion or recycle facilities capable of compliance with this item do not exist or are not located reasonably close to the jobsite. 3. The enforcing agency may make exceptions to the requirements of this section when isolated jobsites are located in areas beyond the haul boundaries of the diversion facility.	GEN. NOTES #12, SHEET A2.1, FLOOR PLAN
4.408.2	**Construction waste management plan** Submit a construction waste management plan meeting Items 1 through 5 in Section 4.408.2. Plans shall be updated as necessary and shall be available for examination during construction.	GEN. NOTES #21, SHEET A2.1, FLOOR PLAN
4.408.3	**Waste management company** Utilize a waste management company, approved by the enforcing agency, which can provide verifiable documentation that diverted construction and demolition waste materials meet the requirements in Section 4.408.1.	GEN. NOTES #22, SHEET A2.1, FLR. PLAN

Page 9 of 16

KERELATION LLC
Building, Design, Planning, Environment & BIM
-Your Virtual Design and Construction Manager-
3190 VERDANT WAY, SAN JOSE, CA 95117
TEL: 408.551.0705
EMAIL: hello@kerelation.com

COPYRIGHT © 2022

KENNY LN RESIDENCE LEGALIZATION

NIRVANA PROPERTY LLC
10315 KENNY LN SAN JOSE 95127

No.	Description	Date
	ISSUED FOR PLAN CHECK	08.01.22

CAL GREEN CHECKLIST

SCALE	
PROJECT NO	220423
SHEET NUMBER	A0.4

8/1/2022 6:31:03 PM

COPYRIGHT © 2022 KERELATION LLC

INTERIOR SPECIFICATIONS

ENVIRONMENTAL QUALITY

4.504.1 Covering of duct openings and protection of mechanical equipment during construction.
Duct openings and other related air distribution component openings shall be covered during construction

4.504.2.1 Adhesives, sealants and caulks.
Adhesives, sealants and caulks shall be compliant with VOC and other toxic compound limits.

ADHESIVE VOC LIMIT [1,2]
(Less Water and Less Exempt Compounds in Grams per Liter)

ARCHITECTURAL APPLICATIONS	VOC LIMIT
Indoor carpet adhesives	50
Carpet pad adhesives	50
Outdoor carpet adhesives	150
Wood flooring adhesive	100
Rubber floor adhesives	60
Subfloor adhesives	50
Ceramic tile adhesives	65
VCT and asphalt tile adhesives	50
Drywall and panel adhesives	50
Cove base adhesives	50
Multipurpose construction adhesives	70
Structural glazing adhesives	100
Single-ply roof membrane adhesives	250
Other adhesives not specifically listed	50
SPECIALTY APPLICATIONS	
PVC welding	510
CPVC welding	490
ABS welding	325
Plastic cement welding	250
Adhesive primer for plastic	550
Contact adhesive	80
Special purpose contact adhesive	250
Structural wood member adhesive	140
Top and trim adhesive	250
SUBSTRATE SPECIFIC APPLICATIONS	
Metal to metal	30
Plastic foams	50
Porous material (except wood)	50
Wood	30
Fiberglass	80

1. If an adhesive is used to bond dissimilar substrates together, the adhesive with the highest VOC content shall be allowed.
2. For additional information regarding methods to measure VOC content specified in table, see South Coast Air Quality Management District Rule 1168.

SEALANT VOC LIMIT
(Less Water and Less Exempt Compounds in Grams per Liter)

SEALANTS	VOC LIMIT
Architectural	250
Marine deck	760
Nonmembrane roof	300
Roadway	250
Single-ply roof membrane	450
Other	420
SEALANT PRIMERS	
Architectural	
Nonporous	250
Porous	775
Modified bituminous	500
Marine deck	760
Other	750

4.504.2.2 Paints and coatings.
Paints, stains and other coatings shall be compliant with VOC limits.

VOC CONTENT LIMITS FOR ARCHITECTURAL COATINGS
(Grams of VOC per Liter of Coating, Less Water and Less Exempt Compounds)

COATING CATEGORY	VOC
Flat coatings	50
Nonflat coatings	100
Nonflat-high gloss coatings	150
SPECIALTY COATING	
Aluminum roof coatings	400
Basement specialty coatings	400
Bituminous roof coatings	50
Bituminous roof primers	350
Bond breakers	350
Concrete curing compounds	350
Concrete/masonry sealers	100
Driveway sealers	50
Dry fog coatings	150
Faux finishing coatings	350
Fire resistive coatings	350
Floor coatings	100
Form-release compounds	250
Graphic arts coatings (sign paints)	500
High temperature coatings	420
Industrial maintenance coatings	250
Low solids coatings[1]	120
Magnesite cement coatings	450
Mastic texture coatings	100
Metallic pigmented coatings	500
Multicolor coatings	250
Pretreatment wash primers	420
Primers, sealers, and undercoaters	100
Reactive penetrating sealers	350
Recycled coatings	250
Roof coatings	50
Rust preventative coatings	250
Shellacs	
Clear	730
Opaque	550
Specialty primers, sealers and undercoaters	100
Stains	250
Stone consolidants	450
Swimming pool coatings	340
Traffic marking coatings	100
Tub and tile refinish coatings	420
Waterproofing membranes	250
Wood coatings	275
Wood preservatives	350
Zinc-rich primers	340

1. Grams of VOC per liter of coating, including water and including exempt compounds.
2. The specified limits remain in effect unless revised limits are listed in subsequent columns in the table.
3. Values in this table derived from those specified by the California Air Resource Board, Architectural Coatings Suggested Control Measure February 1, 2008. More information is available from the Air Resources Board

4.504.2.3 Aerosol paints and coatings.
Aerosol paints and coatings shall be compliant with product weighted MIR limits for ROC and other toxic compounds.

4.504.2.4 Verification.
Documentation shall be provided to verify that compliant VOC limit finish materials have been used.

4.504.3 Carpet systems
All carpet shall meet the testing and project requirements per sec. 4.504.3. All carpet cushion installed in the building interior shall meet the requirements of the Carpet and Rug Institute's Green Label program. All carpet adhesive shall meet the requirements of Table 4.504.1.

4.504.4 Resilient flooring systems.
At least 80% of floor area receiving resilient flooring shall comply with the requirements per sec. 4.504.4.

4.504.5 Composite wood products
Hardwood plywood, particleboard and medium density fiberboard (MDF) used on interior or exterior of the building shall comply with formaldehyde emission limits per Table 4.504.5. SEE INTERIOR SPECS. ON SHEET A2.1

FORMALDEHYDE LIMITS[1]
(Maximum formaldehyde Emissions in Parts per Million)

PRODUCT	LIMIT
Hardwood plywood veneer core	0.05
Hardwood plywood composite core	0.05
Particleboard	0.09
Medium density fiberboard	0.11
Thin medium density fiberboard[2]	0.13

1. Values in this table are derived from those specified by the California Air Resources Board, Air Toxics Control Measure for Composite Wood as tested in accordance with ASTM E 1333-96(2002). For additional information, see California Code of Regulations, Title 17, Sections 93120 through 93120.12.
2. Thin medium density fiberboard has a maximum thickness of 5/16 inch (8mm)

4.505.2 Concrete slab foundations.
Vapor retarder and capillary break is installed at slab-on-grade foundations. SEE INTERIOR SPECS. ON SHEET A2.1

4.503.3 Moisture content of building materials.
Moisture content of building materials used in wall and floor framing shall not to exceed 19% before enclosure. Insulation products which are visibly wet or have a high moisture content shall be replaced or allowed to dry prior to enclosure.

4.506 Indoor air quality and exhaust.
Bathroom exhaust fans shall be ENERGY STAR ducted to outside. Unless functioning as a component of a whole house ventilation system, bathroom exhaust fans must be controlled by a humidistat between a relative humidity range of 50% - 80%.

4.507.2 Heating and air-conditioning system design.
Duct systems are sized, designed, and equipment is selected using the following methods:
1. Establish heat loss and heat gain values according to ANSI/ACCA 2 Manual J-2004 or equivalent.
2. Size duct systems according to ANSI/ACCA 1 Manual D-2009 or equivalent.
3. Select heating and cooling equipment according to ANSI/ACCA 3 Manual S-2004 or equivalent

702.1 Installer Training.
HVAC system installers are trained and certified in the proper installation of HVAC systems. SEE INTERIOR SPECS. ON SHEET A2.1

702.2 Special Inspection.
Special inspectors employed by the enforcing agency must be qualified and able to demonstrate competence in the discipline they are inspecting.

703.1 Documentation.
Verification of compliance with this code may include construction documents, plans, specifications builder or installer certification, inspection reports, or other methods acceptable to the enforcing agency which show substantial conformance. SEE INTERIOR SPECS. ON SHEET A2.1

8/12/2022 6:26:32 PM

CALGreen

2019 CALGREEN RESIDENTIAL MANDATORY MEASURES
EFFECTIVE JANUARY 1, 2020
HCD SHL 615 (New 01/20)

See specific referenced sections for complete details on CALGreen mandatory requirements.

2019 CALGREEN CODE

SECTION	REQUIREMENTS	
	Concrete slab foundations	
4.505.2	Concrete slab foundations or concrete slab-on-ground floors required to have a vapor retarder by the California Building Code, Chapter 19, or the California Residential Code, Chapter 5, respectively, shall also comply with this section.	SEE INTERIOR SPEC. ON SHEET A0.5
	Capillary break	
4.505.2.1	A capillary break shall be installed in compliance with at least 1 of the following: 1. A 4-inch thick base of ½ inch or larger clean aggregate shall be provided with a vapor retarder in direct contact with concrete and a concrete mix design, which will address bleeding, shrinkage, and curling, shall be used. For additional information, see American Concrete Institute, ACI 302.2R-06. 2. Other equivalent methods approved by the enforcing agency. 3. A slab design specified by a licensed design professional.	SEE INTERIOR SPEC. ON SHEET A0.5
	Moisture content of building materials	
4.505.3	Building materials with visible signs of water damage shall not be installed. Wall and floor framing shall not be enclosed when the framing members exceed 19% moisture content. Moisture content shall be verified in compliance with the following: 1. Moisture content shall be determined with either a probe-type or a contact-type moisture meter. Equivalent moisture verification methods may be approved by the enforcing agency and shall satisfy requirements in Section 101.8. 2. Moisture readings shall be taken at a point 2 feet to 4 feet from the grade stamped end of each piece to be verified. 3. At least 3 random moisture readings shall be performed on wall and floor framing with documentation acceptable to the enforcing agency provided at the time of approval to enclose the wall and floor framing. Insulation products which are visibly wet or have a high moisture content shall be replaced or allowed to dry prior to enclosure in wall or floor cavities. Manufacturers' drying recommendations shall be followed for wet-applied insulation products prior to enclosure.	SEE INTERIOR SPEC. ON SHEET A0.5

Page 14 of 16

CALGreen

2019 CALGREEN RESIDENTIAL MANDATORY MEASURES
EFFECTIVE JANUARY 1, 2020
HCD SHL 615 (New 01/20)

See specific referenced sections for complete details on CALGreen mandatory requirements.

2019 CALGREEN CODE

SECTION	REQUIREMENTS	
	Resilient flooring systems	
4.504.4	Where resilient flooring is installed, at least 80% of floor area receiving resilient flooring shall comply with 1 or more of the following: 1. Products compliant with the California Department of Public Health, "Standard Method for the Testing and Evaluation of Volatile Organic Chemical Emissions from Indoor Sources Using Environmental Chambers," Version 1.1, February 2010 (also known as Specification 01350), certified as a CHPS Low-Emitting Material in the Collaborative for High Performance Schools (CHPS) High Performance Products Database. 2. Products certified under UL GREENGUARD Gold (formerly the Greenguard Children & Schools program). 3. Certification under the Resilient Floor Covering Institute (RFCI) FloorScore program. 4. Meet the California Department of Public Health, "Standard Method for the Testing and Evaluation of Volatile Organic Chemical Emissions from Indoor Sources Using Environmental Chambers," Version 1.1, February 2010 (also known as Specification 01350).	SEE INTERIOR SPEC ON SHEET A0.5
	Composite wood products	
4.504.5 & 4.504.5.1	• Hardwood plywood, particleboard and medium density fiberboard composite wood products used on the interior or exterior of the building shall meet the requirements for formaldehyde as specified in the Air Resources Board's Air Toxics Control Measure for Composite Wood (17 CCR 93120 et seq.), as shown in Table 4.504.5. • Documentation is required per Section 4.504.5.1. • Definition of Composite Wood Products: Composite wood products include hardwood plywood, particleboard, and medium density fiberboard. "Composite wood products" do not include hardboard, structural plywood, structural panels, structural composite lumber, oriented strand board, glued laminated timber, prefabricated wood I-joists, or finger-joined lumber, all as specified in CCR, Title 17, Section 93120.1(a).	SEE INTER. SPEC ON SHEET A0.5

Page 13 of 16

CALGreen

2019 CALGREEN RESIDENTIAL MANDATORY MEASURES
EFFECTIVE JANUARY 1, 2020
HCD SHL 615 (New 01/20)

See specific referenced sections for complete details on CALGreen mandatory requirements.

2019 CALGREEN CODE

SECTION	REQUIREMENTS	
	Aerosol paints and coatings	
4.504.2.3 & 4.504.2.4	• Aerosol paints and coatings shall meet the Product-weighted MIR Limits for ROC in Section 94522(a)(2) and other requirements, including prohibitions on use of certain toxic compounds and ozone depleting substances, in Sections 94522(e)(1) and (f)(1) of California Code of Regulations, Title 17, commencing with Section 94520; and in areas under the jurisdiction of the Bay Area Air Quality Management District shall additionally comply with the percent VOC by weight of product limits of Regulation 8, Rule 49. • Documentation is required per Section 4.504.2.4.	SEE INTERIOR SPECS. ON SHEET A0.5
	Carpet systems	
4.504.3	Carpet installed in the building interior shall meet the testing and product requirements of 1 of the following: 1. Carpet and Rug Institute's Green Label Plus Program. 2. California Department of Public Health, "Standard Method for the Testing and Evaluation of Volatile Organic Chemical Emissions from Indoor Sources Using Environmental Chambers," Version 1.1, February 2010 (also known as Specification 01350). 3. NSF/ANSI 140 at the Gold level. 4. Scientific Certifications Systems Indoor Advantage™ Gold.	SEE INTERIOR SPECS. ON SHEET A0.5
	Carpet cushion	
4.504.3.1	Carpet cushion installed in the building interior shall meet the requirements of the Carpet and Rug Institute's Green Label program.	SEE INTERIOR SPECS. ON SHEET A0.5
	Carpet adhesive	
4.504.3.2	Carpet adhesives shall meet the requirements of Table 4.504.1.	SEE INTERIOR SPECS. ON SHEET A0.5

Page 12 of 16

CALGreen

2019 CALGREEN RESIDENTIAL MANDATORY MEASURES
EFFECTIVE JANUARY 1, 2020
HCD SHL 615 (New 01/20)

See specific referenced sections for complete details on CALGreen mandatory requirements.

2019 CALGREEN CODE

SECTION	REQUIREMENTS	
CHAPTER 7 – INSTALLER & SPECIAL INSPECTOR QUALIFICATIONS		
	Installer training	
702.1	HVAC system installers shall be trained and certified in the proper installation of HVAC systems and equipment by a recognized training or certification program. Examples of acceptable HVAC training and certification programs include, but are not limited to, the following: 1. State certified apprenticeship programs. 2. Public utility training programs. 3. Training programs sponsored by trade, labor or statewide energy consulting or verification organizations. 4. Programs sponsored by manufacturing organizations. 5. Other programs acceptable to the enforcing agency.	SEE INTER. SPEC ON SHEET A0.5
	Special inspection	
702.2	When required by the enforcing agency, special inspectors must be qualified and able to demonstrate competence to the enforcing agency in the discipline in which they are inspecting.	SEE INTER. SPEC ON SHEET A0.5
	Documentation	
703.1	Documentation of compliance shall include, but is not limited to, construction documents, plans, specifications, builder or installer certification, inspection reports, or other methods acceptable to the local enforcing agency. Other specific documentation or special inspections necessary to verify compliance are specified in appropriate sections of CALGreen.	SEE INTER. SPEC ON SHEET A0.5

Page 16 of 16

CALGreen

2019 CALGREEN RESIDENTIAL MANDATORY MEASURES
EFFECTIVE JANUARY 1, 2020
HCD SHL 615 (New 01/20)

See specific referenced sections for complete details on CALGreen mandatory requirements.

2019 CALGREEN CODE

SECTION	REQUIREMENTS	
	Bathroom exhaust fans	
4.506.1	Each bathroom shall be mechanically ventilated and shall comply with the following: 1. Fans shall be ENERGY STAR compliant and be ducted to terminate outside the building. 2. Unless functioning as a component of a whole house ventilation system, fans must be controlled by a humidity control. a. Humidity controls shall be capable of manual or automatic adjustment between a relative humidity range of ≤ 50% to a maximum of 80%. b. A humidity control may be a separate component to the exhaust fan and is not required to be integral or built-in. **Note:** For CALGreen, a bathroom is a room which contains a bathtub, shower, or tub/shower combination. Fans or mechanical ventilation is required in each bathroom.	SEE INTERIOR SPEC. ON SHEET A0.5
	Heating and air-conditioning system design	
4.507.2	Heating and air-conditioning systems shall be sized, designed and equipment selected using the following methods: 1. The heat loss and heat gain is established according to ANSI/ACCA 2 Manual J – 2016 (Residential Load Calculation), ASHRAE handbooks or other equivalent design software or methods. 2. Duct systems are sized according to ANSI/ACCA 1 Manual D – 2016 (Residential Duct Systems), ASHRAE handbooks or other equivalent design software or methods. 3. Select heating and cooling equipment according to ANSI/ACCA 3 Manual S – 2014 (Residential Equipment Selection) or other equivalent design software or methods. **Exception:** Use of alternate design temperatures necessary to ensure the systems function are acceptable.	SEE INTERIOR SPEC. ON SHEET A0.5

Page 15 of 16

KERELATION LLC
Building, Design, Planning, Environment & BIM
-Your Virtual Design and Construction Manager-
3190 VERDANT WAY, SAN JOSE, CA 95117
TEL: 408.551.0705
EMAIL: hello@kerelation.com

COPYRIGHT © 2022

KENNY LN RESIDENCE LEGALIZATION

NIRVANA PROPERTY LLC
10315 KENNY LN SAN JOSE 95127

No.	Description	Date
	ISSUED FOR PLAN CHECK	08.01.22

CAL GREEN CHECKLIST (CONT.) & INTERIOR SPECS

SCALE	1/4" = 1'-0"
PROJECT NO	220423
SHEET NUMBER	A0.5

COPYRIGHT © 2022 KERELATION LLC

POST THIS NOTICE AT THE JOB SITE

CLEAN BAY BLUEPRINT

Stormwater Pollution Prevention

Stormwater pollution is a major source of water pollution in California. It can cause declines in fisheries, disrupt habitats, and limit water recreation activities. Even more importantly, stormwater pollution poses a serious threat to the overall health of the ecosystem.

Common sources of pollutants from construction sites include: sediments from soil erosion; construction materials, stockpiles and waste (e.g., paint, solvents, concrete, drywall); and spilled oil, fuel, and other fluids from construction vehicles and heavy equipment.

In San Jose, the storm drain system consists of gutters, storm drains, underground pipes, open channels, culverts and creeks. Storm drain systems are designed to drain directly to the Bay with no treatment.

San Jose and the other municipalities in the Bay Area are required by the Federal Clean Water Act to develop stormwater management programs that include requirements for construction activities. Your construction project will need to comply with local municipal requirements. If your construction activity will disturb one acre or more, you must also obtain insurance coverage under the General Construction Activity Permit issued by the State Water Resources Control Board.

This Clean Bay Blueprint is an introductory guide to stormwater quality control on construction sites. It contains several principles and techniques that you can use to help prevent stormwater pollution. The Bay Area Stormwater Management Agencies Association (BASMAA) and the City of San Jose have developed these guidelines as a resource for all general contractors, home builders, and subcontractors working on construction sites.

Employees should be trained and subcontractors informed about the stormwater requirements and their own responsibilities. The property owner and the contractor are responsible for all activities at your site, including activities by your subcontractors and employees.

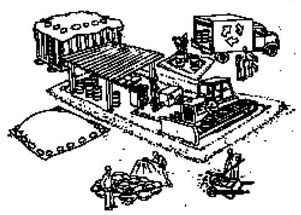

Material Storage and Spill Clean Up

- ✔ Cover exposed piles of soil, construction materials and wastes with plastic sheeting or temporary roofs. Before it rains, sweep and remove materials from surfaces that drain to storm drains, creeks, or channels.
- ✔ Build berms around storage areas to prevent contact with runoff.
- ✔ Store containers of paints, chemicals, solvents, and other hazardous materials in accordance with secondary containment regulations and under cover during rainy periods.
- ✔ Cover open dumpsters with plastic sheeting or a tarp during rainy weather. Secure the sheeting or tarp around the outside of the dumpster. If your dumpster has a cover, close it.
- ✔ If a dumpster is leaking, contain and collect leaking material. Return the dumpster to the leasing company for repair or exchange.
- ✔ Sweep up spilled dry materials (for example cement, mortar, or fertilizer) immediately. Never attempt to "wash them away" with water, or bury them. Use only minimal water for dust control.
- ✔ Clean up liquid spills on paved or impermeable surfaces using "dry" cleanup methods (for example absorbent materials like cat litter, sand or rags). Have spill cleanup kits available.
- ✔ Clean up spills on dirt areas by digging up and properly disposing of the contaminated soil.

Report significant spills to the appropriate spill response agencies immediately.

Earth-Moving Activities and Erosion Control

- ✔ Avoid contaminating clean runoff from areas adjacent to your site by using berms and/or temporary or permanent drainage ditches to divert water flow around the site. Reduce stormwater runoff velocities by constructing temporary check dams and/or berms, where appropriate.
- ✔ Construct diversion dikes and drainage swales to channel runoff around the site.
- ✔ Use berms and drainage ditches to divert runoff around exposed areas. Place diversion ditches across the top of cut slopes.
- ✔ Plant vegetation on exposed slopes. Where replanting is not feasible, cover with erosion control blankets (for example mulch netting or matting of jute, straw, glass fiber or excelsior).
- ✔ Cover stockpiled soil and landscaping materials with secured plastic sheeting and divert runoff around them. Keep exposed stockpiles off of paved roadways, sidewalks and driveways.
- ✔ Protect drainage courses, creeks, or catch basins with backup measures such as silt fences and/or temporary drainage swales.
- ✔ Conduct routine inspections of all erosion and sediment control measures and repair when necessary. This is particularly critical before, during and immediately after rainstorms.
- ✔ Protect storm drain inlets from sediment-laden runoff. Storm drain inlet protection devices include barriers of burlap bags filled with *drain rock,* filter fabric fences, block and gravel filters, and excavated drop inlet sediment traps.
- ✔ Limit on-site construction routes and stabilize construction entrances. Prevent construction vehicles from tracking soil onto adjacent streets.
- ✔ Dry-sweep, where possible, to clean sediments from streets, driveways and paved areas on construction sites. If water must be used to flush pavement, collect runoff to settle out sediments and protect storm drain inlets.
- ✔ Prevent all debris, construction materials, soil, rock, etc. from being introduced into any storm drain or sanitary sewer structures.

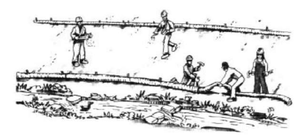

Roadwork and Pavement Construction

- ✔ Apply concrete, asphalt, and seal coat during dry weather to prevent unset paving material from washing away with stormwater runoff.
- ✔ Cover storm drain inlets and manholes when paving or applying seal coat, slurry seal, fog seal, etc.
- ✔ Always park paving machines over drip pans or absorbent materials, since they tend to drip continuously. Do not spray diesel fuel to prevent asphalt build up on equipment. Use alternatives, such as citrus-based products.
- ✔ Use as little water as possible when making saw-cuts in pavement. Contain the slurry by placing rock bags, or temporary berms as close to the saw-cuts as possible. Vacuum "wet", or allow slurry to dry and shovel.
- ✔ Wash down exposed aggregate concrete only when the wash water can:
  - (1) Flow onto a dirt area;
  - (2) Drain onto a bermed surface from which it can be pumped and disposed of properly; or
  - (3) Be vacuumed from a catchment created by blocking a storm drain inlet. If necessary, divert runoff with temporary berms. Make sure runoff does not reach gutters or storm drains.
- ✔ ***Never wash sweepings from exposed aggregate concrete into a street or storm drain.*** Collect and return to aggregate base stockpile, or dispose with trash.

Update pollution prevention measures as construction phases change or are completed.

Useful Phone Numbers

Spill Response Agencies	
Dial 911 for Hazardous Materials Spills	
Santa Clara Valley Water District Environmental Compliance Division	(408) 265-2600
Department of Fish & Wildlife Office of Spill Prevention and Response	(800) 852-7550 (24 hours)
City of San José Environmental Services Department Environmental Enforcement Division	(408) 945-3000
Local Recyclers and Disposal Services	
Santa Clara Countywide Recycling Hotline Integrated Waste Management Division	1(800) 533-8414
Local Pollution Control Agencies	
Santa Clara County Department of Environmental Health Hazardous Materials Compliance Division	(408) 918-3400
Santa Clara Valley Water District	(408) 265-2600
San José/Santa Clara Regional Wastewater Facility	(408) 945-5300
City of San José	
Departments of Public Works and Planning, Building and Code Enforcement Grading Permits and Inspections **http://www.sanjoseca.gov**	(408) 535-3555

For more information on stormwater requirements, call the State Water Resources Control Board's Stormwater Information Line at (916) 341-5537, or San José's Environmental Services Watershed Protection Division at (408) 945-3000.

Vehicle and Equipment Maintenance

- ✔ Maintain all vehicles and heavy equipment. Inspect frequently and repair leaks.
- ✔ Use drip pans or drop cloths to catch drips and spills if you must drain and replace motor oil, radiator coolant, or other fluids on-site. Collect all spent fluids, store in labeled separate containers, and recycle whenever possible. Keep all fuels, oils and lubricants within secondary containment.
- ✔ Designate specific areas of the construction site, well away from creeks or storm drain inlets, for auto and equipment parking and routine vehicle and equipment maintenance.
- ✔ Perform major maintenance, repair jobs and vehicle and equipment washing off-site when feasible, or in designated and controlled areas on-site.
- ✔ Wash vehicles at an appropriate off-site facility. If equipment must be washed on-site, just use water and ***prevent water from entering the storm drain.*** Do not use soaps, solvents, degreasers, or steam cleaning equipment. Direct wash water to an area that will not flow to any storm drain inlets. The waste wash water can evaporate and/or infiltrate within this designated area.
- ✔ Refuel vehicles and heavy equipment in one designated location on the site and ***clean up spills immediately.***
- ✔ Oil, antifreeze, batteries, and tires should also be recycled. Please contact the County Household Hazardous Waste Program at (408) 299-7300 for assistance on how you may dispose of your hazardous wastes.

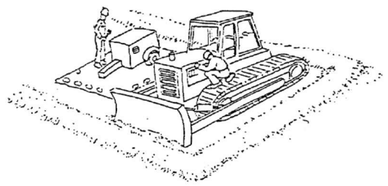

Paints, Solvents and Adhesives

- ✔ Sweep up or collect non-hazardous paint chips and dust from dry stripping and sandblasting in plastic drop cloths and dispose of as trash. Dispose of chemical paint stripping residue and chips and dust from marine paints or paints containing lead or tributyl tin as hazardous waste.
- ✔ ***Never clean brushes or rinse paint containers into a street, gutter, storm drain, or creek.***
- ✔ For water-based paints, paint out brushes to the maximum extent possible and rinse to a drain leading to the sanitary sewer (i.e., indoor plumbing). Dried latex paint may be disposed of in the trash.
- ✔ For oil-based paints, paint out brushes to the maximum extent possible, and filter and reuse thinners and solvents. Dispose of unusable thinners and residue as hazardous waste.
- ✔ Unwanted paint (that is not recycled), thinners, and sludges must be disposed of as hazardous waste.

Have spill cleanup kits available.

Concrete, Cement and Mortars

- ✔ Avoid mixing excess amounts of fresh concrete or cement mortar on-site.
- ✔ Wash out concrete transit mixers only in designated wash-out areas where the water will flow into settling ponds or onto dirt or stockpiles of aggregate base or sand. Whenever possible, recycle washout by pumping back into mixers for reuse. **Never dispose of washout into the street, storm drains, drainage ditches, or creeks.**
- ✔ Whenever possible, return contents of mixer barrel to the yard for recycling. Dispose of small amounts of excess concrete, grout, and mortar in the trash.

Call Environmental Enforcement at (408) 945-3000 before dewatering and/or pumping into storm or sanitary sewer systems.

Waste Disposal

- ✔ Keep pollutants off exposed surfaces. Place trash cans around the site to reduce litter. Dispose of non-hazardous construction wastes in covered dumpsters or recycling receptacles.
- ✔ Recycle leftover materials whenever possible. Materials such as concrete, asphalt, scrap metal, solvents, degreasers, cleared vegetation, paper, rock, and vehicle maintenance materials such as used oil, antifreeze, batteries, and tires are recyclable.
- ✔ Recycle leftover construction and demolition materials whenever possible. Materials such as concrete, rock, asphalt, cleared vegetation, scrap metal, wood, carpet, drywall can be recycled. For a list of facilities that will accept these materials: http://www.sjrecycles.org/BusinessDirectoryII.aspx?IngBusinessCategoryID=39
- ✔ Dispose of all wastes properly. Materials that cannot be reused or recycled must be taken to an appropriate landfill or disposed of as hazardous waste.

Never throw or dispose of debris into channels, creeks or into wetland areas. Never store or leave debris in the street or near a creek where it may contact runoff.

- ✔ Illegal dumping is a violation subject to a fine and/or time in jail. Be sure that trailers carrying your materials are covered during transit. If not, the hauler may be cited and fined.
- ✔ Do not dispose of plant material in a creek or drainage facility or leave it in a roadway where it can clog storm drain inlets.
- ✔ Avoid disposal of plant material in trash dumpsters or mixing it with other wastes. Compost plant material or take it to a landfill or other facility that composts yard waste.
- ✔ Check with the Fire Department with questions on proper storage of hazardous materials.
- ✔ Protect all wastes from rainwater and runoff.

CLEAN BAY BLUEPRINT

SAN JOSE ENVIRONMENTAL SERVICES

FOR INFORMATION ONLY

10/14/24

KERELATION LLC
Building, Design, Planning, Environment & BIM
-Your Virtual Design and Construction Manager-
3190 VERDANT WAY, SAN JOSE, CA 95117
TEL: 408.551.0705
EMAIL: hello@kerelation.com

COPYRIGHT © 2022

KENNY LN RESIDENCE LEGALIZATION

NIRVANA PROPERTY LLC
10315 KENNY LN SAN JOSE 95127

No.	Description	Date
	ISSUED FOR PLAN CHECK	08.01.22

CLEAN BAY BLUE PRINT

SCALE	
PROJECT NO	220423
SHEET NUMBER	A0.6

8/1/2022 5:15:28 PM

COPYRIGHT © 2022 KERELATION LLC

WINDOW & DOOR NOTES

* THE CONTRACTOR TO FIELD VERIFY ALL (E) EGRESS WINDOWS, REPLACE W/ NEW IF NOT COMPLIANT

FINISH: ALUMINUM CLAD-WOOD
1 ALL WINDOWS ARE ALUMINUM CLAD-WOOD WINDOWS BY MILGARD OR SIMILAR.

FINISH: VINYL
1 ALL WINDOWS ARE VINYL WINDOWS BY MILGARD OR SIMILAR, TO MATCH EXISTING.

GENERAL
1 ALL DOOR AND WINDOW SIZES ARE APPROXIMATE DIMENSIONS.
2 THE CONTRACTOR SHALL VERIFY EXACT UNIT SIZES AND ROUGH OPENING DIMENSIONS PRIOR TO PURCHASES OR INSTALLATION OF WINDOWS AND DOORS.
3 TEMPERED GLAZING AT BATH SHOWER AND TUB.
4 ALL WINDOW GLAZING TO BE DUAL PANED, LOW "E" GLAZING W/ 1/2" AIR GAP.
5 ALL EXTERIOR DOORS SHALL BE FULLY WEATHERSTRIPPED AND CAULKED.
6 ALL DOOR GLAZING TO BE TEMPERED.
7 ALL INTERIOR DOORS TO BE HOLLOW CORE 1 3/8" THK. U.O.N.
8 ALL ENTRY DOORS TO BE SOLID CORE 1 3/4" THK.
9 PROVIDE NEW DOOR HARDWARE PER OWNER'S SPECIFICATIONS.

STYLE: CRAFTSMAN
1 ALL WINDOWS ARE CRAFTSMAN STYLE DOUBLE HUNG PAINTED WHITE COLOR, U.O.N.
2 ALL DOORS ARE CRAFTSMAN STYLE INCLUDING GARAGE DOOR PAINTED WHTIE COLOR, U.O.N.

TYP. WINDOW & DOOR DETAILS:

- WINDOW OPENING FLASHING DETAIL: 9 / A6
- SLIDING WINDOW DETAILS: 13 / A6
- DOUBLE HANG WINDOW DETAILS: 14 / A6
- EGRESS WINDOW REQUIREMENTS: 16 / A6

- DOOR FLASHING DETAIL: 5 / A6
- EXT. DOOR HEAD/JAMB DETAIL: 4 / A6
- EXT. DOOR SILL DETAIL: 3 / A6
- SLIDING DOOR HEAD/JAMB DETAIL: 8 / A6
- INTERIOR DOOR HEAD SEE DETAIL: 12 / A6

WINDOW TYPE:

SL. SLIDER TYPE
D.H. DOUBLE HANG TYPE
CM. CASEMENT
AW. AWNING TYPE
FIX. FIXED TYPE
SK. SKYLIGHT

SEE ENERGY CALCULATION (TITLE-24 REPORT) FOR REQUIRED U VALUE FOR ALL NEW WINDOWS /SLIDERS /SKYLIGHTS

SAFETY GLASS NOTES:

WINDOW REQUIRED TO HAVE TEMPERED, OR OTHER SAFETY GLAZING, BASED ON THE FOLLOWING: CBC 2406, CRC 308.1, 380.4
A. IN THE SAME PLANE OF A DOOR IN THE CLOSED POSITION AND WITHIN TWO FEET OF EITHER SIDE OF THE DOOR.
B. ON A WALL PERPENDICULAR TO THE PLANE OF A DOOR IN A CLOSED POSITION AND WITHIN 24 INCHES OF THE HINGE SIDE OF IN-SWINGING DOOR.
C. ADJACENT TO A BOTTOM STAIR LANDING WHERE GLAZING IS LESS THAN 36 INCHES ABOVE THE LANDING AND WITHIN 60 INCHES HORIZONTALLY OF THE LANDING.
D. ADJACENT TO STAIRS WHERE GLAZING IS LOCATED LESS THAN 36 INCHES ABOVE THE PLANE OF THE ADJACENT WALKING SURFACE.
E. WITHIN A PORTION OF WALL ENCLOSING A TUB/SHOWER WHERE THE BOTTOM EXPOSED EDGE OF THE GLAZING IS LESS THAN 60 INCHES ABOVE THE STANDING SURFACE AND DRAIN INLET.
F. WITHIN 60 INCHES OF A TUB/SHOWER WHERE THE GLAZING IS LESS THAN 60 INCHES ABOVE THE WALKING SURFACE.
G. ANY GLAZING MEETING ALL THE FOLLOWING CONDITIONS:
– EXPOSED AREA OF AN INDIVIDUAL PANE GREATER THAN 9 SQUARE FEET
– EXPOSED BOTTOM EDGE IS LESS THAN 18 INCHES ABOVE THE FINISHED FLOOR
– EXPOSED TOP EDGE IS GREATER THAN 36 INCHES ABOVE THE FINISHED FLOOR
– WHERE A WALKING SURFACE IS WITHIN 36 INCHES HORIZONTALLY OF THE GLAZING

NOT THAT TEMPERED GLAZING (EXCEPT TEMPERED SPANDREL GLASS) SHALL BE PERMANENTLY IDENTIFIED BY A MANUFACTURER MARKING THAT IS PERMANENTLY APPLIED AND CANNOT BE REMOVED WITHOUT BEING DESTROYED (E.G. SAND BLASTED, ACID ETCHED, CERAMIC FIRED, LASER ETCHED, OR EMBOSSED). STICKERS ATTACHED TO THE WINDOW ARE NOT SUFFICIENT.

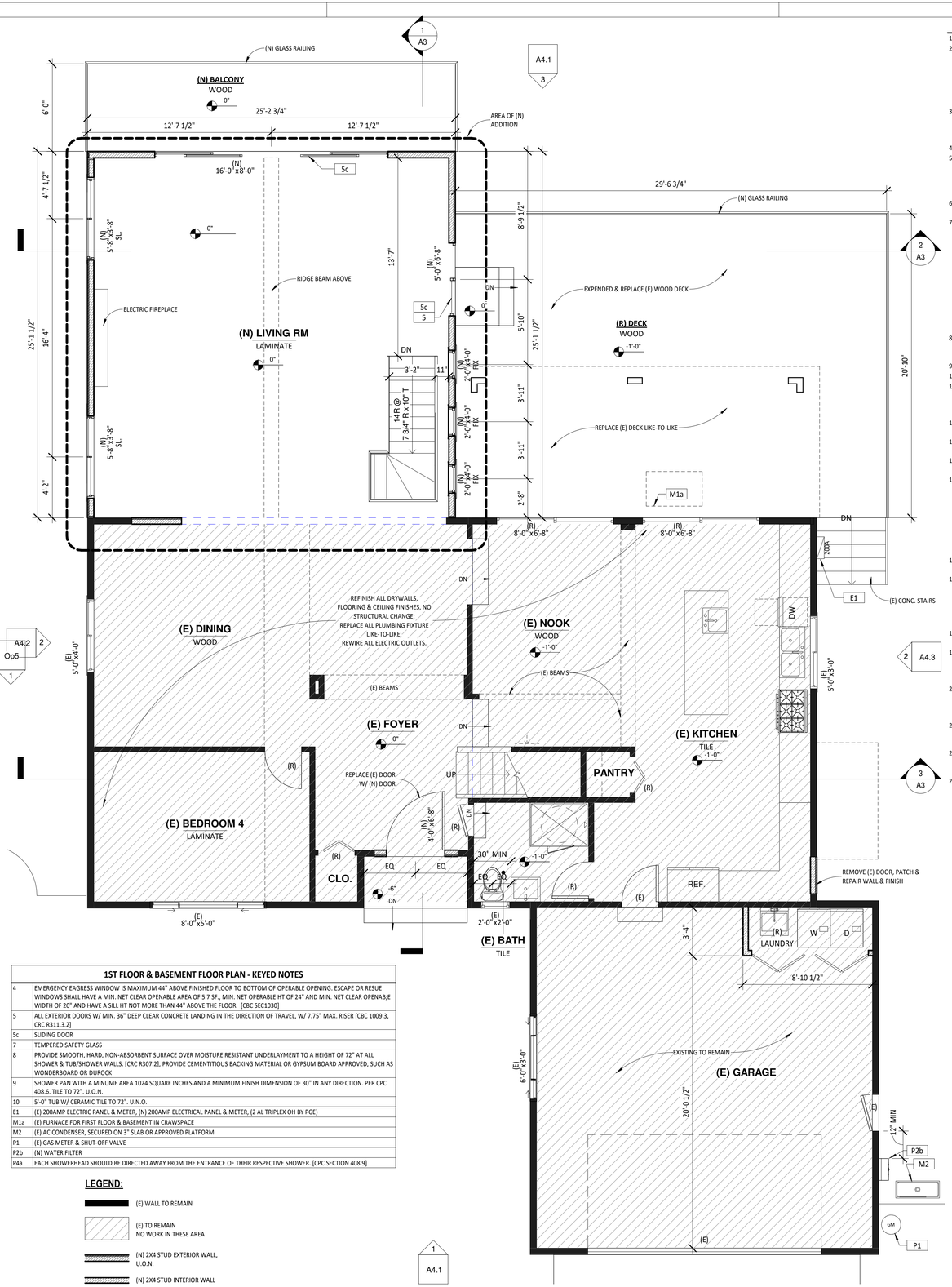

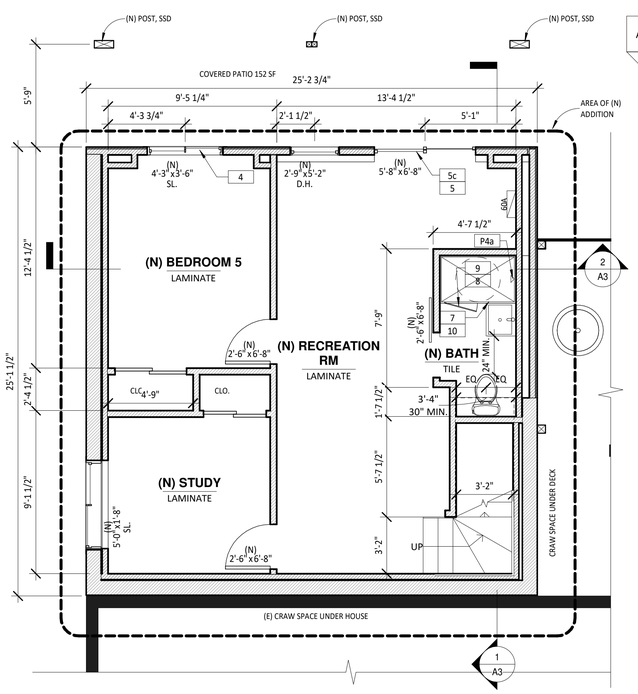

1ST FLOOR & BASEMENT FLOOR PLAN - KEYED NOTES

4	EMERGENCY EAGRESS WINDOW IS MAXIMUM 44" ABOVE FINISHED FLOOR TO BOTTOM OF OPERABLE OPENING. ESCAPE OR RESUE WINDOWS SHALL HAVE A MIN. NET CLEAR OPENABLE AREA OF 5.7 SF., MIN. NET OPERABLE HT OF 24" AND MIN. NET CLEAR OPENAB;E WIDTH OF 20" AND HAVE A SILL HT NOT MORE THAN 44" ABOVE THE FLOOR. [CBC SEC1030]
5	ALL EXTERIOR DOORS W/ MIN. 36" DEEP CLEAR CONCRETE LANDING IN THE DIRECTION OF TRAVEL, W/ 7.75" MAX. RISER [CBC 1009.3, CRC R311.3.2]
5c	SLIDING DOOR
7	TEMPERED SAFETY GLASS
8	PROVIDE SMOOTH, HARD, NON-ABSORBENT SURFACE OVER MOISTURE RESISTANT UNDERLAYMENT TO A HEIGHT OF 72" AT ALL SHOWER & TUB/SHOWER WALLS. [CRC R307.2], PROVIDE CEMENTITIOUS BACKING MATERIAL OR GYPSUM BOARD APPROVED, SUCH AS WONDERBOARD OR DUROCK
9	SHOWER PAN WITH A MINUME AREA 1024 SQUARE INCHES AND A MINIMUM FINISH DIMENSION OF 30" IN ANY DIRECTION. PER CPC 408.6. TILE TO 72". U.O.N.
10	5'-0" TUB W/ CERAMIC TILE TO 72". U.N.O.
E1	(E) 200AMP ELECTRIC PANEL & METER, (N) 200AMP ELECTRICAL PANEL & METER, (2 AL TRIPLEX OH BY PGE)
M1a	(E) FURNACE FOR FIRST FLOOR & BASEMENT IN CRAWSPACE
M2	(E) AC CONDENSER, SECURED ON 3" SLAB OR APPROVED PLATFORM
P1	(E) GAS METER & SHUT-OFF VALVE
P2b	(N) WATER FILTER
P4a	EACH SHOWERHEAD SHOULD BE DIRECTED AWAY FROM THE ENTRANCE OF THEIR RESPECTIVE SHOWER. [CPC SECTION 408.9]

LEGEND:

(E) WALL TO REMAIN
(E) TO REMAIN NO WORK IN THESE AREA
(N) 2X4 STUD EXTERIOR WALL, U.O.N.
(N) 2X4 STUD INTERIOR WALL

2 **PROPOSED BASEMENT FLOOR PLAN**
1/4" = 1'-0"

1 **PROPOSED 1ST FLOOR PLAN**
1/4" = 1'-0"

FLOOR PLAN - GENERAL NOTES

1 REFER TO OTHER PLANS AND ELEVATIONS FOR ADDITIONAL NOTES AND INFORMATION.
2 NEW INTERIOR WALL TO BE: 2x4 OR 2X6 WOOD STUDS @16" O.C. WITH 1/2" THK. GYP. BD.ON BOTH SIDES. USE CEMENT BACKING BD. @ WET WALLS (1/2 CDX PLYWOOD OVER STUD @ SHEAR WALLS). WATER-RESISTANT GYPSUM BOARD SHALL NOT BE USED WHERE THERE WILL BE DIRECT EXPOSURE TO WATER, OR IN AREAS SUBJUECT TO CONT. HIGH HUMIDITY (PER CRC R702.3.7.1). INTERIOR WALLS RECEIVE SMOOTH FINISH TO MATCH EXISTING. PAINT ALL INTERIOR AREAS OF NEW CONSTRUCTION AND AREAS AFFECTED BY NEW CONSTRUCTION, U.O.N. COLORS TO BE DETERMINED.
3 NEW EXTERIOR WALL TO BE: 2x4 OR 2X6 WOOD STUDS @16" O.C. WITH 1/2" THK. GYP. BD. INTERIOR SIDE 7/8" CEMENT PLASTER OVER PAPER BACKED LATH OR WOOD SIDING OVER #15 BLDG. PAPER (PAINTED) OVER 1/2" CDX PLYWOOD (SEE ELEVATION FOR EXTERIOR FINISH).
4 ALL WORK SHOULD CONFORM TO LOCAL AND STATE BUILDING CODES.
5 ALL BEDROOM SHOULD HAVE EGRESS WINDOWS. EGRESS WINDOWS SHALL HAVE A MIN NET CLEAR OPERABLE AREA OF 5.7 SQ.FT. THE MIN NEW CLEAR OPERABLE HEIGHT DIMENSION SHALL BE 24" AND THE MIN NET CLEAR OPERABLE WIDTH DIMENSION SHALL BE 20", WHEN WINDOWS ARE PROVIDED AS A MEANS OF ESCAPE OR RESCUE THEY SHALL HAVE A FINISHED SILL HEIGHT OF NOT MORE THAN 44" ABOVE THE FLOOR.
6 CONTRACTOR SHALL PROVIDE NEW AIR DISTRIBUTION THROUGHOUT AREAS OF NEW CONSTRUCTION.
7 PLUMBING FIXTURES (WATER CLOSETS AND URINALS) AND FITTINGS (FAUCETS AND SHOWERHEADS) SHALL COMPLY WITH THE PRESCRIPTIVE REQUIREMENTS OF SECTIONS 4.303.1.1 THROUGH 4.303.1.4.4. 4.303.1.1 WATER CLOSETS - THE EFFECTIVE FLUSH VOLUME SHALL NOT EXCEED 1.28 GALLONS PER FLUSH. TANK-TYPE W.C. SHALL BE CERTIFIED TO THE PERFORMANCE CRITERIA OF THE U.S. EPA WATERSENSE FOR TANK-TYPE TOILETS; 4.303.1.2 THE EFFECTIVE FLUSH VOLUME OF URINALS SHALL NOT EXCEED 0.5 GALLONS PER FLUSH; 4.303.1.3.1 SINGLE SHOWERHEAD SHALL HAVE A MAX. FLOW RATE OF NOT MORE THAN 1.8 GALLONS/ MINUTE @ 80 PSI. SHOWERHEADS SHALL BE CERTIFIED TO THE PERFORMANCE CRITERIA OF THE U.S. EPA WATERSENSE SPECIFICATION; 4.303.1.4.1 MAX. LAVATORY FAUCETS SHALL NOT EXCEED 1.2 GALLONS/ MIN. @ 60 PSI. THE MIN. FLOW RATE SHALL NOT BE LESS THAN 0.8 GALLONS/ MIN. @ 20 PSI. 4.303.1.4.1 METERING FAUCETS SHALL NOT EXCEEDS 0.20 GALLONS PER CYCLE. THE MAX. FLOW RATE OF KITCHEN FAUCET SHALL NOT EXCEED 1.5 GPM AT 60 PSI.
8 PLUMBING FIXTURES AND FITTINGS REQUIRED IN SECTION 4.303.1 SHALL BE INSTALLED IN ACCORDANCE WITH THE CALIFORNIA PLUMBING CODE, AND SHALL MEET THE APPLICABLE REFERENCED STANDARDS.
9 CEMENT USE IN FOUNDATION MIX DESIGN IS REDUCED - NOT LESS THAN A 20% REDUCTION.
10 INSTALL THERMAL INSULATION IN COMPLIANCE WITH VOC LIMITS.
11 ANNULAR SPACES AROUND PIPES, ELECTRIC CABLES, CONDUITS OR OTHER OPENINGS IN SOLE/BOTTOM PLATES AT EXTERIOR WALLS SHALL BE RODENT PROOFED BY CLOSING SUCH OPENINGS WITH CEMENT MORTAR, CONCRETE MASONRY, OR SIMILAR METHOD ACCEPTABLE TO THE ENFORCING AGENCY [CGC 4.406.1].
12 RECYCLE AND/OR SALVAGE FOR REUSE A MINIMUM OF 65% OF THE NONHAZARDOUS CONSTRUCTION AND DEMOLITION WASTE [CGBC Section 4.408.1].
13 AN OPERATION AND MAINTENANCE MANUAL SHALL BE PROVIDED TO THE BUILDING OCCUPANT OR OWNER [CGC 4.410.1]
14 CONTRACTOR TO DEVELOP AND IMPLEMENT TO MANAGE STORM WATER DRAINAGE DURING CONSTRUCTION [CGC 4.106.2 & 4.106.3].
15 PER CALIFORNIA CIVIL CODE ARTICLE 1101.4 AND CALGREEN SECTION 301.1, FOR ALL BUILDING ALTERATIONS OR IMPROVEMENTS TO A SINGLE FAMILY RESIDENTIAL PROPERTY, EXISTING PLUMBING FIXTURES IN THE ENTIRE HOUSE THAT DO NOT MEET CURRENT FLOW RATES WILL NEED TO BE UPGRADED. WATER CLOSETS WITH A FLOW RATE IN EXCESS OF 1.6 GPF WILL NEED TO BE REPLACED WITH WATER CLOSETS WITH A MAXIMUM FLOW RATE OF 1.28 GPF. SHOWER HEADS WITH A FLOW RATE GREATER THAN 2.5 GPM WILL NEED TO BE REPLACED WITH A MAXIMUM 1.8 GPM SHOWER HEAD. LAVATORY AND KITCHEN FAUCETS WITH A FLOW RATE GREATER THAN 2.2 GPM WILL NEED TO BE REPLACED WITH A FAUCET WITH MAXIMUM FLOW RATE OF 1.2 GPM (OR 1.8 GPM FOR KITCHEN FAUCETS).
16 ANY WOOD STOVE OR PELLET STOVE SHALL COMPLY WITH US EPA PHASE II EMISSION LIMITS [CGC 4.503.1].
17 AT THE TIME OF ROUGH INSTALLATION, DURING STORAGE ON THE CONSTRUCTION SITE AND UNTIL FINAL STARTUP OF THE HEATING, COOLING AND VENTILATING EQUIPMENT, ALL DUCT AND OTHER RELATED AIR INTAKE AND DISTRIBUTION COMPONENTS OPENINGS SHALL BE COVERED WITH TAPE, PLASTIC, SHEET METALS, OR OTHER METHODS ACCEPTABLE TO THE ENFORCING AGENCY TO REDUCE THE AMOUNT OF WATER, DUST OR DEBRIS, WHICH MAY ENTER THE SYSTEM [CGC 4.504.1].
18 ADHESIVE, SEALANTS AND CAULKS SHALL MEET THE VOC OR OTHER TOXIC COMPOUND LIMITS [CGC 4.504.2.1].
19 A CAPILLARY BREAK SHALL BE INSTALLED IF A SLAB ON GRADE FOUNDATION SYSTEM IS USED. THE USE OF A 4" THICK BASE OF ¾" OR LARGER CLEAN AGGREGATE UNDER A 6 MIL VAPOR RETARDER WITH JOINT LAPPED NOT LESS THAN 6" WILL BE PROVIDED [CGC 4.505.2; CRC R506.2.3].
20 BUILDING MATERIALS WITH VISIBLE SIGNS OF WATER DAMAGE SHALL NOT BE INSTALL. WALL AND FLOOR FRAMING SHALL NOT BE ENCLOSED WHEN THE FRAMING MEMBERS EXCEED 19% MOISTURE CONTENT. MOISTURE CONTENT SHALL BE CHECKED PRIOR TO FINISH MATERIAL BEING APPLIED [CGC 4.505.3].
21 GC TO SUBMIT A CONSTRUCTION WASTE MANAGEMENT PLAN MEETING ITEMS 1 ~ 5 IN SECTION 4.408.2 CGB. PLANS SHALL BE UPDATED AS NECESSARY AND SHALL BE AVAILABLE FOR EXAMINATION DURING CONSTRUCTION.
22 UTILIZE A WASTE MANAGEMENT COMPANY, APPROVED BY THE ENFORCING AGENCY, WHICH CAN PROVIDE VERIFICATION DOCUMENTATION THAT DIVERTED CONSTRUCTION AND DEMOLITION WASTE MATERIALS MEET THE REQ'S IN [CGC 4.408.1].
23 GC. TO GENERATE A TOTAL COMBINED WEIGHT OF CONSTRUCTION AND DEMOLITION WASTE DISPOSED IN LANDFILLS THAT IS EQUAL TO OR LESS THAN 4 POUNDS PER SQUARE-FOOT OF THE BUILDING AREA.

KERELATION LLC
Building, Design, Planning, Environment & BIM
-Your Virtual Design and Construction Manager-
3190 VERDANT WAY, SAN JOSE, CA 95117
TEL: 408.551.0705
EMAIL: hello@kerelation.com

COPYRIGHT © 2022

KENNY LN RESIDENCE LEGALIZATION

NIRVANA PROPERTY LLC
10315 KENNY LN SAN JOSE 95127

No.	Description	Date
	PLN REVIEW SUBMISSION	05.31.22
	OWNER REVIEW/CONF'N	06.04.22
	ISSUED FOR PLAN CHECK	08.01.22

PROPOSED 1ST FLOOR & BASEMENT PLAN

SCALE	1/4" = 1'-0"
PROJECT NO	220423
SHEET NUMBER	A2.1

COPYRIGHT © 2022 KERELATION LLC

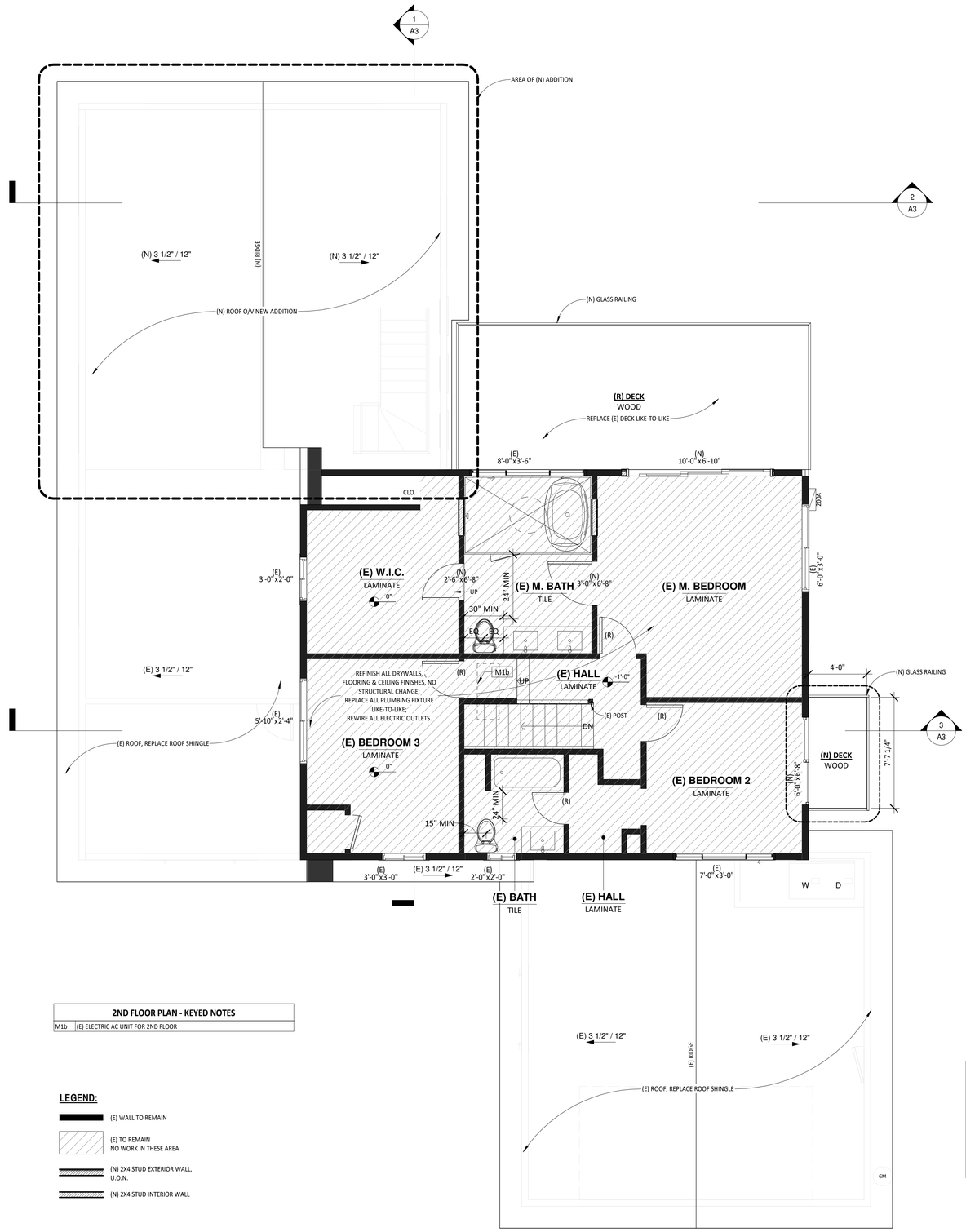

2ND FLOOR PLAN - KEYED NOTES	
M1b	(E) ELECTRIC AC UNIT FOR 2ND FLOOR

LEGEND:

- (E) WALL TO REMAIN
- (E) TO REMAIN NO WORK IN THESE AREA
- (N) 2X4 STUD EXTERIOR WALL, U.O.N.
- (N) 2X4 STUD INTERIOR WALL

1 **PROPOSED 2ND FLOOR PLAN (NO NEW ADDITION)**
1/4" = 1'-0"

N

KERELATION LLC
Building, Design, Planning, Environment & BIM
-Your Virtual Design and Construction Manager-
3190 VERDANT WAY, SAN JOSE, CA 95117
TEL: 408.551.0705
EMAIL: hello@kerelation.com

COPYRIGHT © 2022

KENNY LN RESIDENCE LEGALIZATION

NIRVANA PROPERTY LLC
10315 KENNY LN SAN JOSE 95127

No.	Description	Date
	PLN REVIEW SUBMISSION	05.31.22
	OWNER REVIEW/CONF'N	06.04.22
	ISSUED FOR PLAN CHECK	08.01.22

PROPOSED 2ND FLOOR PLAN

SCALE	1/4" = 1'-0"
PROJECT NO	220423
SHEET NUMBER	A2.2

COPYRIGHT © 2022 KERELATION LLC

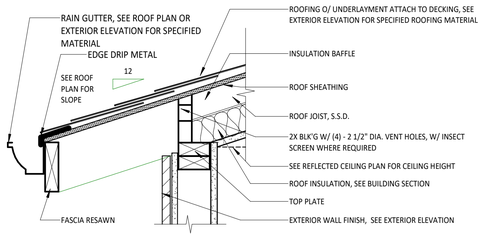

16 TYP. EAVE W/ VENT
1 1/2" = 1'-0"

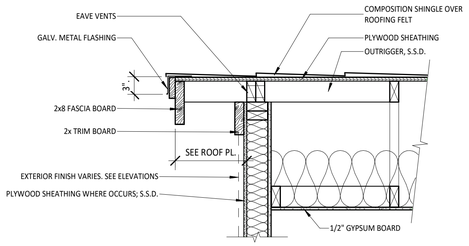

15 TYP. ROOF RAKE
1" = 1'-0"

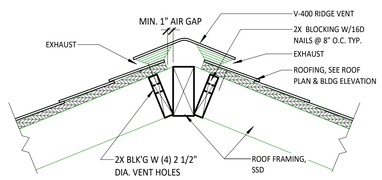

14 TYP. RIDGE VENT @ VENTED ATTIC
1" = 1'-0"

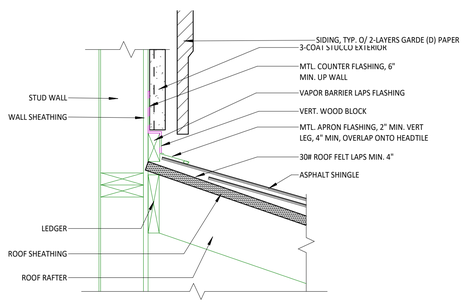

13 TYP. ROOF TO WALL DETAIL
3" = 1'-0"

ROOF VENT CALCULATION

MARK	TYPE	LENGTH	VENT AREA PER LINEAR FT	SUB TOTAL
EV01	Roof Vent-Eave	24'-8"	0.102	2.52
EV02	Roof Vent-Eave	24'-8"	0.102	2.52
RV01	Roof Vent-Ridge	23'-2"	0.125	2.90
Grand total		72'-6"		7.93

TOTAL REQUIRED ROOF VENT AREA:
634 SF / 150 SF = 4.22 SF
SEE CALCULATION BELOW, TOTAL ROOF VENT PROVIDED:
7.93 SF > 4.22 SF [OK]

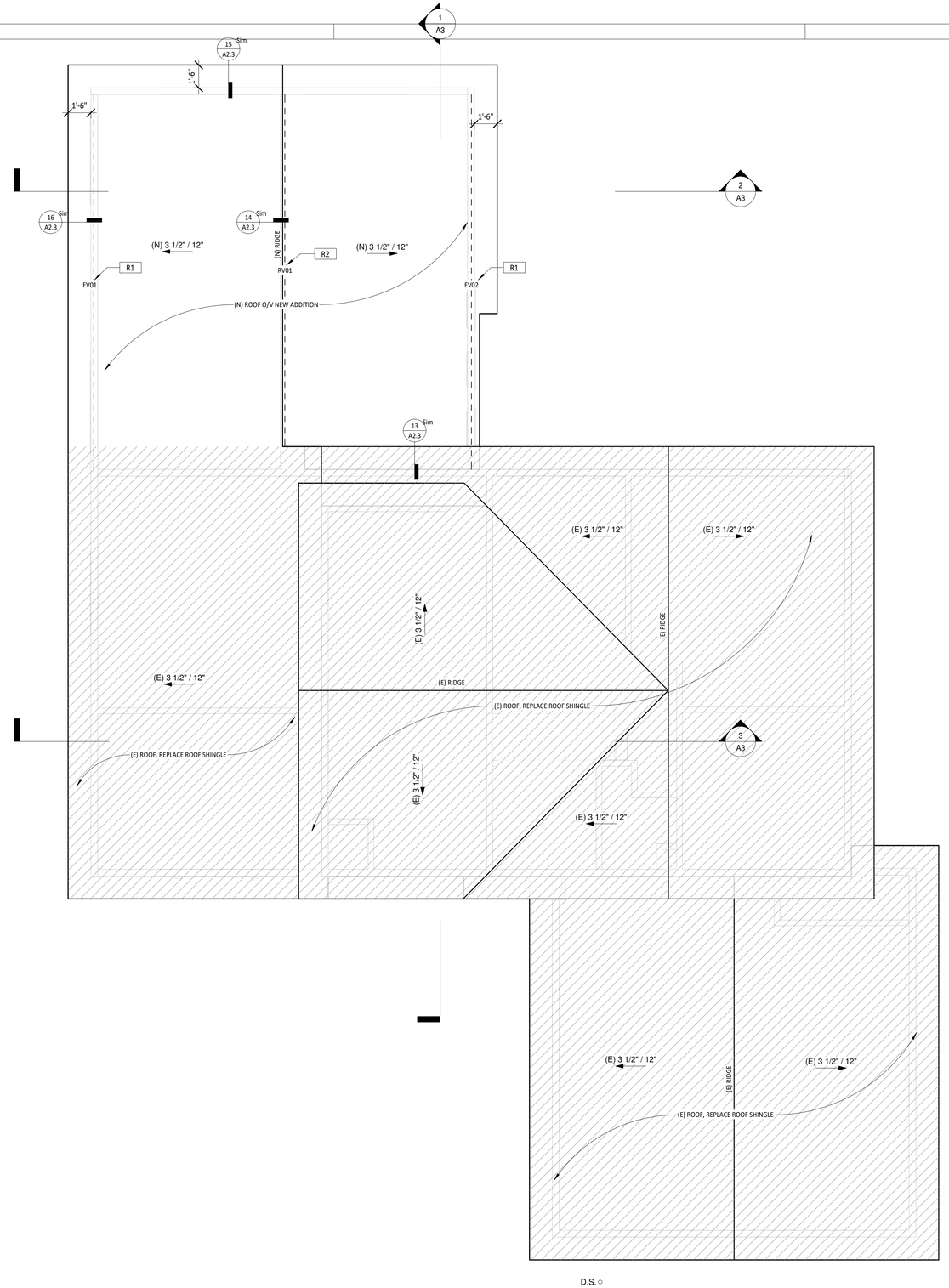

1 PROPOSED ROOF PLAN
1/4" = 1'-0"

N

ROOF PLAN - GENERAL NOTES

1. GC TO VERIFY IN FIELD THE EXISTING SLOPE OF THE ROOF, NOTICE THE PROJECT DESIGNER IF DIFFERENT THAN ON THE DRAWINGS.
2. NEW ROOF SLOPE TO MATCH EXISTING, U.O.N.
3. PROVIDE NEW ROOF MATERIAL - ASPHALT SHINGLE THROUGHOUT AREA OF ADDITION WORK WITH R-30 INSULATION ABOVE CEILING (SEE TITLE-24 REPORT).
4. ROOFING MATERIALS SHALL HAVE A MINIMUM 3-YEAR AGED SOLAR REFLECTANCE AND THERMAL REMITTANCE OR A MINIMUM SOLAR REFLECTANCE INDEX (SRI) EQUAL TO OR GREATER THAN THE VALUES SPECIFIED IN TABLE A4.106.5 (1), WHICH IS SRI >= 10 [CALGREEN A4.106.5].
5. ALL PLUMBING VENTS SHALL TERMINATE NOT LESS THAN 6" ABOVE THE ROOF NOR LESS THAN 1' FROM ANY VERTICAL SURFACE. VENTS SHALL TERMINATE NOT LESS THAN 10" FROM OR 3' ABOVE ANY WINDOW, DOOR, OPENING, AIR INTAKE, OR VENT SHAFT NOR 3' FROM LOT LINE [CPC 906].

ROOF PLAN - KEYED NOTES

R1	EAVE VENT (3) 2 1/2" DIA. HOLE PER LF (0.102 SF).
R2	CERTAINTEED RIDGE VENT (FOR SHINGLE), 18 SQ.IN. NET FREE AREA PER LF (0.125 SF).

KERELATION LLC
Building, Design, Planning, Environment & BIM
-Your Virtual Design and Construction Manager-
3190 VERDANT WAY, SAN JOSE, CA 95117
TEL: 408.551.0705
EMAIL: hello@kerelation.com

COPYRIGHT © 2022

KENNY LN RESIDENCE LEGALIZATION

NIRVANA PROPERTY LLC
10315 KENNY LN SAN JOSE 95127

No.	Description	Date
	PLN REVIEW SUBMISSION	05.31.22
	OWNER REVIEW/CONF'N	06.04.22
	ISSUED FOR PLAN CHECK	08.01.22

PROPOSED ROOF PLAN & ROOF DETAILS

SCALE	As indicated
PROJECT NO	220423
SHEET NUMBER	A2.3

COPYRIGHT © 2022 KERELATION LLC

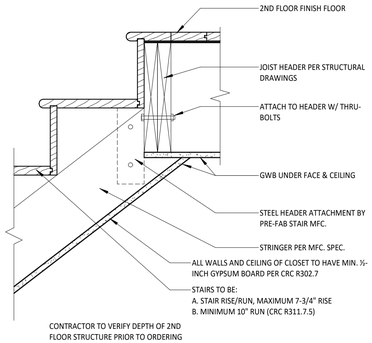

16 STAIR - NOSE SECTION
1 1/2" = 1'-0"

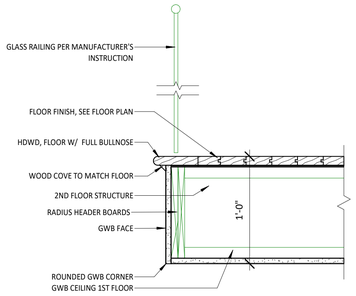

12 STAIR - GUARD RAIL AT FLOOR
1 1/2" = 1'-0"

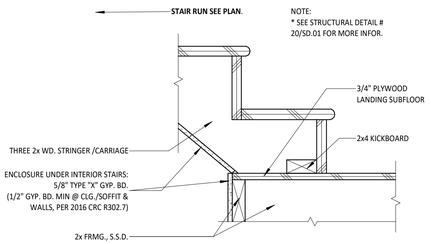

15 STAIR, STRINGER AT LANDING
1 1/2" = 1'-0"

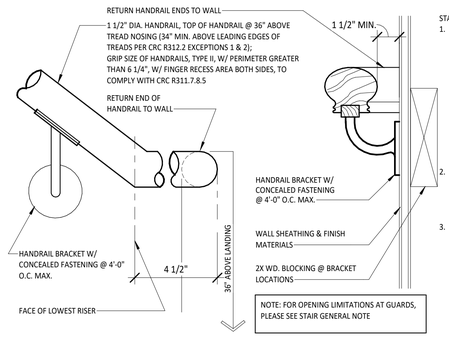

STAIR GENERAL NOTE:
1. REQUIRED GUARDS AT OPEN-SIDED WALKING SURFACES SHALL NOT BE LESS THAN 42" HIGH MEASURED VERTICALLY ABOVE THE ADJACENT WALKING SURFACE. REQUIRED GUARDS SHALL NOT HAVE OPENINGS FROM THE WALKING SURFACE TO THE REQUIRED GUARD HEIGHT WHICH ALLOW PASSAGE OF A SPHERE 4" IN DIAMETER.
2. ALL GUARD RAILS SHALL BE A MINIMUM 34" ABOVE LEADING EDGES OF TREADS PER CRC R312.2 EXCEPTIONS 1 & 2.
3. GUARDS ON THE OPEN SIDES OF STAIRS SHALL NOT HAVE OPENINGS WHICH ALLOW PASSAGE OF A SPHERE 4 3/8" IN DIAMETER. THE TRIANGULAR OPENINGS AT THE OPEN SIDE OF A STAIR, FORMED BY THE RISER, TREAD AND BOTTOM RAIL OF A GUARD, SHALL NOT ALLOW PASSAGE OF A SPHERE 6" IN DIAMETER PER CRC R312.3 EXCEPTIONS 1 & 2. GRIP SIZE OF HANDRAILS TO COMPLY WITH CRC R311.7.8.5

11 HANDRAIL @ WALL & STAIR
3" = 1'-0"

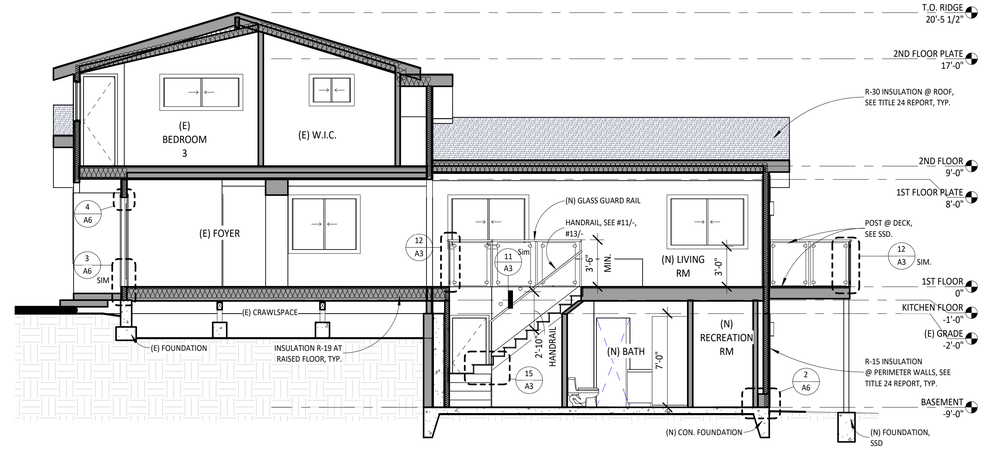

1 SECTION-1
3/16" = 1'-0"

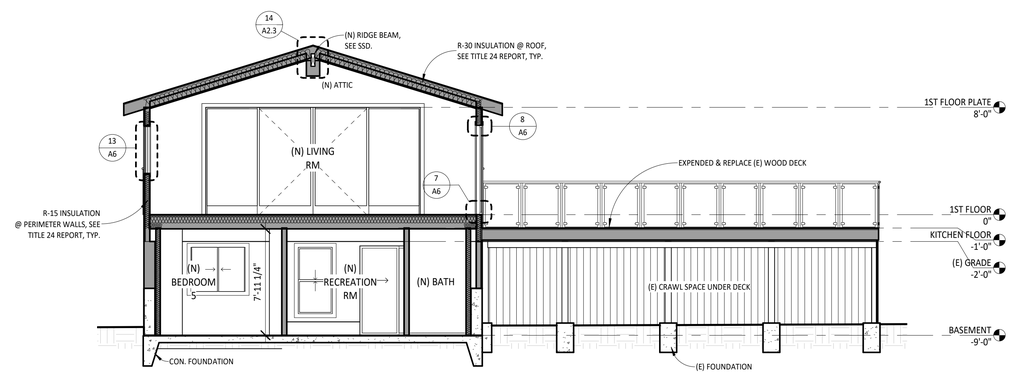

2 SECTION-2
3/16" = 1'-0"

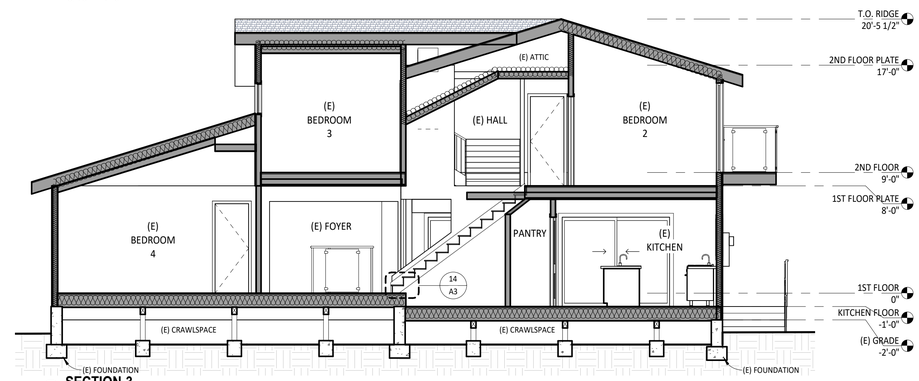

3 SECTION-3
3/16" = 1'-0"

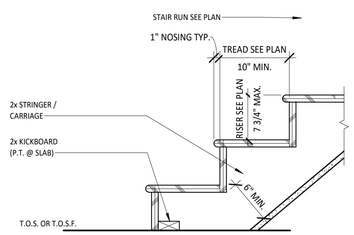

NOTE:
RISER & TREAD SHALL COMPLY WITH 2019 C.R.C. SECTION R311.7.5

14 STAIR TREAD & RISER
1 1/2" = 1'-0"

THIS DETAIL SUPPLEMENTS OTHER HANDRAIL AND DETAILS BY SHOWING DIAGRAMNATICALLY 2019 C.R.C. REQ. FOR ACTUAL MEMBER SIZES, SHAPES, DIMENSIONS, AND CONSTRUCTION SEE OTHER DETAILS

AT INTERIOR STAIRS:

(1) 4.375" (4 3/8") DIA. SPHERE MAY NOT PASS THROUGH, PER C.R.C. R312.3, EXCEPTION 2.

(2) 4" DIA. SPHERE MAY NOT PASS THROUGH, PER C.R.C. R312.3

(3) 6" DIA. SPHERE MAY NOT PASS THOUGH, PER C.R.C. R312.3 EXCEPTION 1.

AT EXTERIOR STAIRS:

(4) 4" DIA. SPHERE MAY NOT PASS THROUGH, PER C.R.C. R312.3

(5) 6" DIA. SHEPERE MAY NOT PASS THOUGH, PER C.R.C R312,3 EXCEPTION 1.

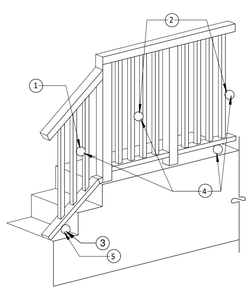

13 TYP. STAIR HANDRAIL/GUARD DIAGRAM
1 1/2" = 1'-0"

COPYRIGHT © 2022 KERELATION LLC

KERELATION LLC
Building, Design, Planning, Environment & BIM
-Your Virtual Design and Construction Manager-
3190 VERDANT WAY, SAN JOSE, CA 95117
TEL: 408.551.0705
EMAIL: hello@kerelation.com
COPYRIGHT © 2022

KENNY LN RESIDENCE LEGALIZATION

NIRVANA PROPERTY LLC
10315 KENNY LN SAN JOSE 95127

No.	Description	Date
	PLN REVIEW SUBMISSION	05.31.22
	OWNER REVIEW/CONF'N	06.04.22
	ISSUED FOR PLAN CHECK	08.01.22

BUILDING SECTIONS & DETAILS

SCALE	As indicated
PROJECT NO	220423
SHEET NUMBER	A3

EXTERIOR ELEVATION - GENERAL NOTES

1 GENERAL CONTRACTOR TO CONFIRM WALL/SIDING PAINT COLOR AND TRIM COLOR WITH THE OWNER PRIOR TO ORDERING. MATCH COLOR TO EXISTING.
2 GENERAL CONTRACTOR TO CONFIRM THE COLORS OF DOORS AND WINDOWS WITH THE OWNER PRIOR TO CONSTRUCTION.
3 ALL WINDOWS TO BE DOUBLE PANEL.
4 GENERAL CONTRACTOR TO PROVIDE ATTIC VENTILATION TO BE 1/150 SF OF ITS SPACE, U.O.N.
5 GENERAL CONTRACTOR TO PROVIDE UNDERFLOOR VENTILATION TO BE 1/150 SF OF ITS SPACE, U.O.N.

STUCCO WALL NOTES

1 NOTE ON PLANS THAT THE STUCCO IS TO BE APPLIED WITH A 3 COAT APPLICATION WHEN APPLIED OVER METAL LATH OR WIRE LATH [CRC R703.7.2].
2 SPECIFY 2 LAYERS OF GRADE "D" PAPER UNDER CEMENT PLASTER COVERING WHEN APPLIED OVER WOOD SHEATHING [CRC R703.7.3].
3 PROVIDE WEEP SCREED AT THE BOTTOM OF STUCCO WALLS AT A LOCATION A MINIMUM OF 4" ABOVE EARTH OR 2" ABOVE PAVED AREAS [CRC R703.7.2.1].

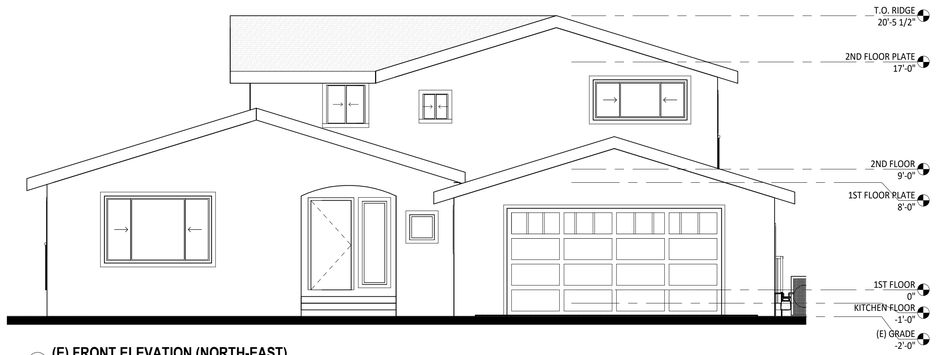

5 **(E) FRONT ELEVATION (NORTH-EAST)**
3/16" = 1'-0"

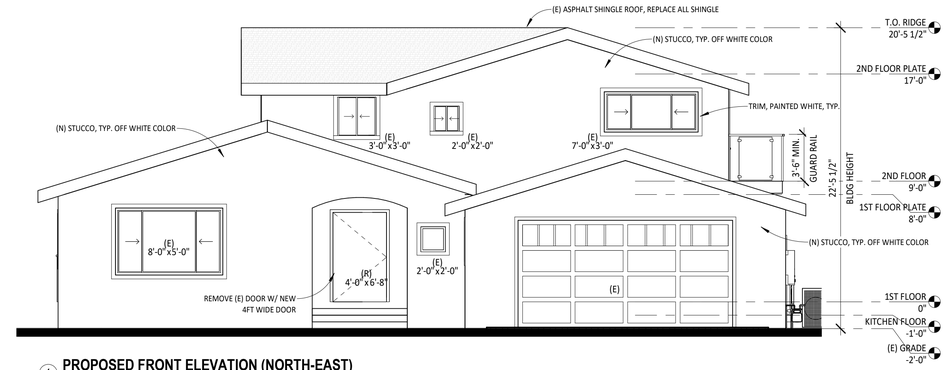

1 **PROPOSED FRONT ELEVATION (NORTH-EAST)**
3/16" = 1'-0"

7 **(E) REAR ELEVATION (SOUTH-WEST)**
3/16" = 1'-0"

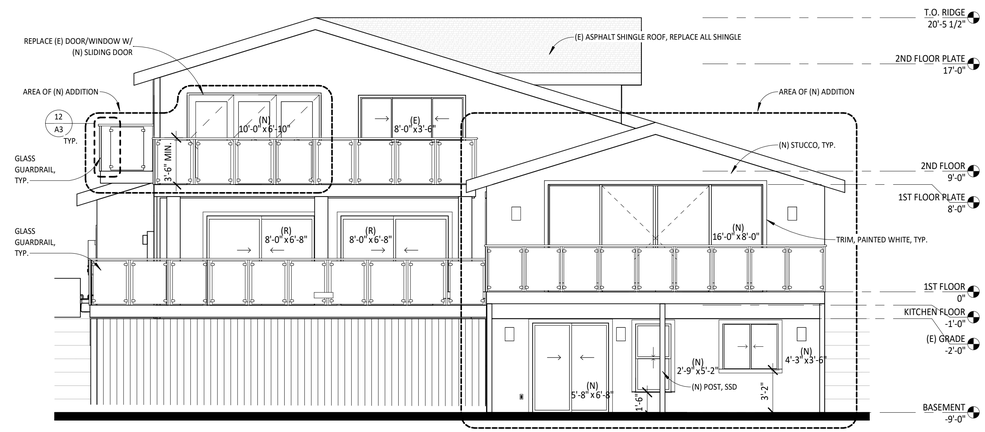

3 **PROPOSED REAR ELEVATION (SOUTH-WEST)**
3/16" = 1'-0"

KERELATION LLC
Building, Design, Planning, Environment & BIM
-Your Virtual Design and Construction Manager-
3190 VERDANT WAY, SAN JOSE, CA 95117
TEL: 408.551.0705
EMAIL: hello@kerelation.com

COPYRIGHT © 2022

KENNY LN RESIDENCE LEGALIZATION

NIRVANA PROPERTY LLC
10315 KENNY LN SAN JOSE 95127

No.	Description	Date
	PLN REVIEW SUBMISSION	05.31.22
	OWNER REVIEW/CONF'N	06.04.22
	ISSUED FOR PLAN CHECK	08.01.22

EXTERIOR ELEVATIONS

SCALE	3/16" = 1'-0"
PROJECT NO	220423
SHEET NUMBER	A4.1

COPYRIGHT © 2022 KERELATION LLC

EXTERIOR ELEVATION - GENERAL NOTES

1 GENERAL CONTRACTOR TO CONFIRM WALL/SIDING PAINT COLOR AND TRIM COLOR WITH THE OWNER PRIOR TO ORDERING. MATCH COLOR TO EXISTING.
2 GENERAL CONTRACTOR TO CONFIRM THE COLORS OF DOORS AND WINDOWS WITH THE OWNER PRIOR TO CONSTRUCTION.
3 ALL WINDOWS TO BE DOUBLE PANEL.
4 GENERAL CONTRACTOR TO PROVIDE ATTIC VENTILATION TO BE 1/150 SF OF ITS SPACE, U.O.N.
5 GENERAL CONTRACTOR TO PROVIDE UNDERFLOOR VENTILATION TO BE 1/150 SF OF ITS SPACE, U.O.N.

STUCCO WALL NOTES

1 NOTE ON PLANS THAT THE STUCCO IS TO BE APPLIED WITH A 3 COAT APPLICATION WHEN APPLIED OVER METAL LATH OR WIRE LATH [CRC R703.7.2].
2 SPECIFY 2 LAYERS OF GRADE "D" PAPER UNDER CEMENT PLASTER COVERING WHEN APPLIED OVER WOOD SHEATHING [CRC R703.7.3].
3 PROVIDE WEEP SCREED AT THE BOTTOM OF STUCCO WALLS AT A LOCATION A MINIMUM OF 4" ABOVE EARTH OR 2" ABOVE PAVED AREAS [CRC R703.7.2.1].

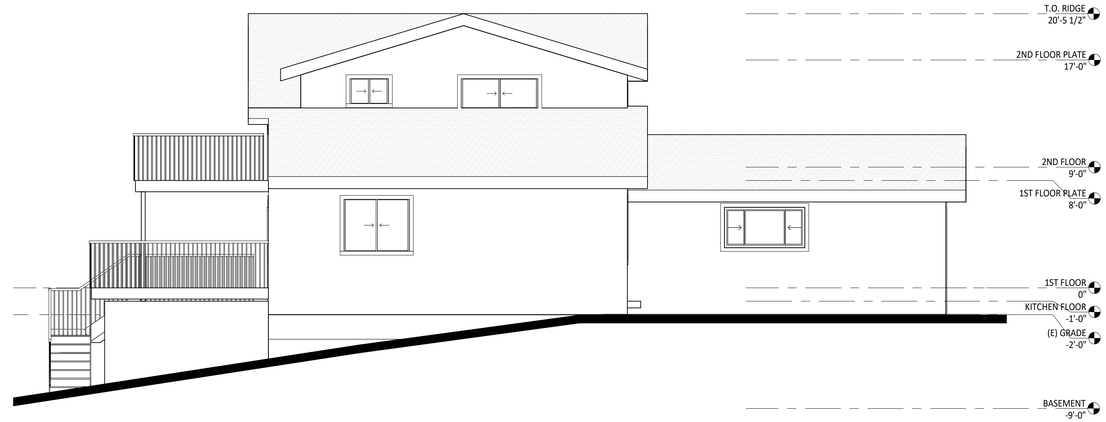

1 **(E) LEFT ELEVATION (SOUTH-EAST)**
3/16" = 1'-0"

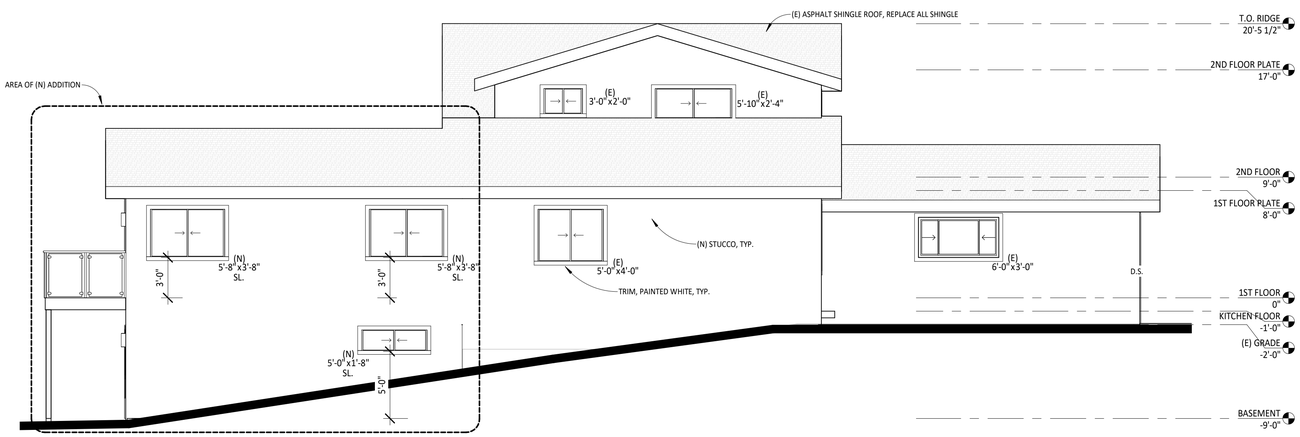

2 **PROPOSED LEFT ELEVATION (SOUTH-EAST)**
3/16" = 1'-0"

KERELATION LLC
Building, Design, Planning, Environment & BIM
-Your Virtual Design and Construction Manager-
3190 VERDANT WAY, SAN JOSE, CA 95117
TEL: 408.551.0705
EMAIL: hello@kerelation.com

COPYRIGHT © 2022

KENNY LN RESIDENCE LEGALIZATION

NIRVANA PROPERTY LLC
10315 KENNY LN SAN JOSE 95127

No.	Description	Date
	PLN REVIEW SUBMISSION	05.31.22
	OWNER REVIEW/CONF'N	06.04.22
	ISSUED FOR PLAN CHECK	08.01.22

EXTERIOR ELEVATIONS

SCALE	3/16" = 1'-0"
PROJECT NO	220423
SHEET NUMBER	A4.2

COPYRIGHT © 2022 KERELATION LLC

EXTERIOR ELEVATION - GENERAL NOTES

1 GENERAL CONTRACTOR TO CONFIRM WALL/SIDING PAINT COLOR AND TRIM COLOR WITH THE OWNER PRIOR TO ORDERING. MATCH COLOR TO EXISTING.
2 GENERAL CONTRACTOR TO CONFIRM THE COLORS OF DOORS AND WINDOWS WITH THE OWNER PRIOR TO CONSTRUCTION.
3 ALL WINDOWS TO BE DOUBLE PANEL.
4 GENERAL CONTRACTOR TO PROVIDE ATTIC VENTILATION TO BE 1/150 SF OF ITS SPACE, U.O.N.
5 GENERAL CONTRACTOR TO PROVIDE UNDERFLOOR VENTILATION TO BE 1/150 SF OF ITS SPACE, U.O.N.

STUCCO WALL NOTES

1 NOTE ON PLANS THAT THE STUCCO IS TO BE APPLIED WITH A 3 COAT APPLICATION WHEN APPLIED OVER METAL LATH OR WIRE LATH [CRC R703.7.2].
2 SPECIFY 2 LAYERS OF GRADE "D" PAPER UNDER CEMENT PLASTER COVERING WHEN APPLIED OVER WOOD SHEATHING [CRC R703.7.3].
3 PROVIDE WEEP SCREED AT THE BOTTOM OF STUCCO WALLS AT A LOCATION A MINIMUM OF 4" ABOVE EARTH OR 2" ABOVE PAVED AREAS [CRC R703.7.2.1].

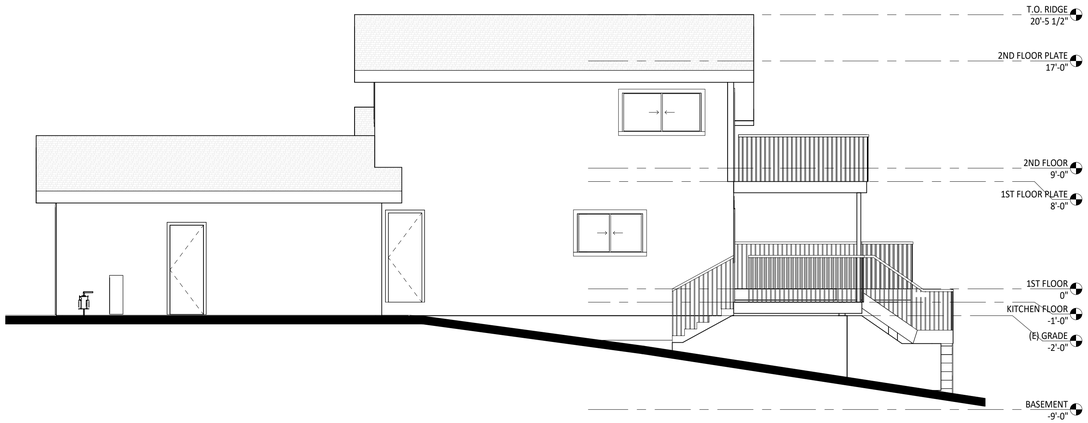

1 **(E) RIGHT ELEVATION (NORTH-WEST)**
3/16" = 1'-0"

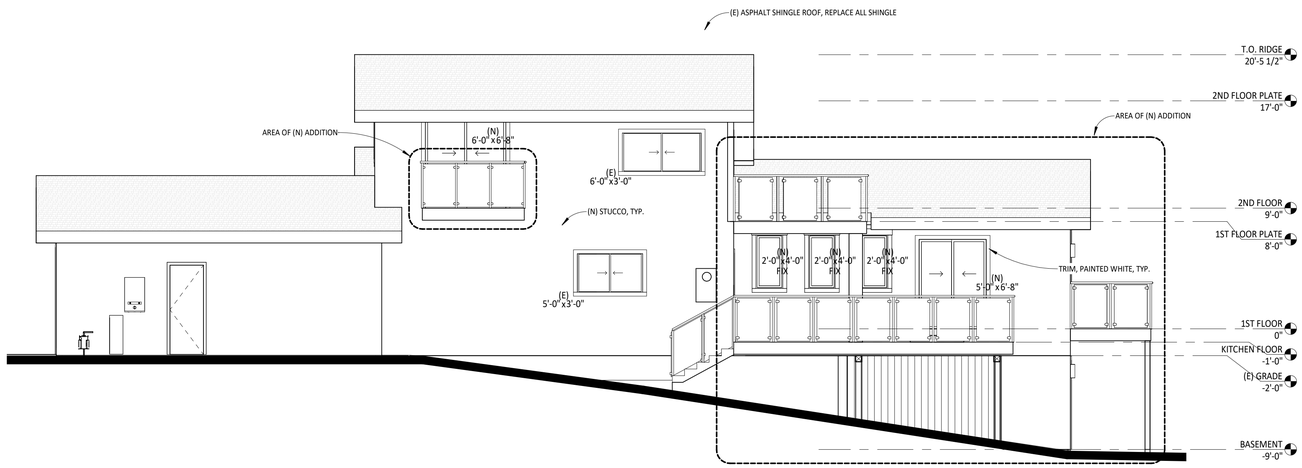

2 **PROPOSED RIGHT ELEVATION (NORTH-WEST)**
3/16" = 1'-0"

KERELATION LLC
Building, Design, Planning, Environment & BIM
-Your Virtual Design and Construction Manager-
3190 VERDANT WAY, SAN JOSE, CA 95117
TEL: 408.551.0705
EMAIL: hello@kerelation.com

COPYRIGHT © 2022

KENNY LN RESIDENCE LEGALIZATION

NIRVANA PROPERTY LLC
10315 KENNY LN SAN JOSE 95127

No.	Description	Date
	PLN REVIEW SUBMISSION	05.31.22
	OWNER REVIEW/CONF'N	06.04.22
	ISSUED FOR PLAN CHECK	08.01.22

EXTERIOR ELEVATIONS

SCALE	3/16" = 1'-0"
PROJECT NO	220423
SHEET NUMBER	A4.3

COPYRIGHT © 2022 KERELATION LLC

REFLECTED CEILING & POWER PLANS - KEYED NOTES

E1	(E) 200AMP ELECTRIC PANEL & METER, (N) 200AMP ELECTRICAL PANEL & METER, (2 AL TRIPLEX OH BY PGE)
E1a	(N) ELECTRIC SUB PANEL
E3	WATER PROOF CEILING RECESSED LIGHT OR FAN, MUST BE A LISTED PRODUCT FROM A RECOGNIZED APPROVAL/LISTING AGENCY
E4	A DEDICATED 20-AMP CIRCUIT TO SERVE THE REQUIRED BATHROOM OUTLETS, WHICH CANNOT SUPPLY ANY OTHER RECEPTACLES
E5	EACH BATHROOM SHALL HAVE ONE LIGHT FIXTURE CONTROLLED BY A VACANCY SENSOR SWITCH THAT REQUIRES A MANUAL ON ACTIVATION (DOES NOT AUTOMATICALLY TURN ON) AND AUTOMATICALLY TURNS OFF WITHIN 30 MINUTES AFTER THE ROOM IS VACATED. ALL OTHER LIGHT FIXTURES SHALL BE CONTROLLED BY A VACANCY SENSOR OR DIMMER [CA ENERGY EFFICIENCY STANDARDS 150.0(k)]
E7	OUTDOOR LIGHTING SHALL BE CONTROLLED BY:i: MANUAL ON/OFF SWITCH; AND ii. CONTROLLED BY PHOTOCELL AND MOTION SENSOR OR PHOTO CONTROL TIME SWITCH CONTROL/ASTRONOMICAL TIME CLOCK/ ENERGY MANAGEMENT CONTROLS SYSTEM.
E8	AT LEAST ONE RECEPTACLE SHALL BE PROVIDED AT THE FRONT OF THE HOUSE AND ONE PROVIDED AT THE BACK OF THE HOUSE. EACH SHALL BE LOCATED NO MORE THAN 6-1/2 FEET ABOVE GRADE [CEC 210.52 (D)(1)]
M1a	(E) FURNACE FOR FIRST FLOOR & BASEMENT IN CRAWSPACE
M1b	(E) ELECTRIC AC UNIT FOR 2ND FLOOR
M2	(E) AC CONDENSER, SECURED ON 3" SLAB OR APPROVED PLATFORM
P1	(E) GAS METER & SHUT-OFF VALVE
P2b	(N) WATER FILTER
P4a	EACH SHOWERHEAD SHOULD BE DIRECTED AWAY FROM THE ENTRANCE OF THEIR RESPECTIVE SHOWER. [CPC SECTION 408.9]
P4c	CUSTOM TILED SHOWER PAN (OR PREFAB SHOWER PAN) WITH A MINUME AREA 1024 SQUARE INCHES AND A MINIMUM FINISH DIMENSION OF 30" IN ANY DIRECTION [CPC 408.6] TILE TO 72". U.O.N.

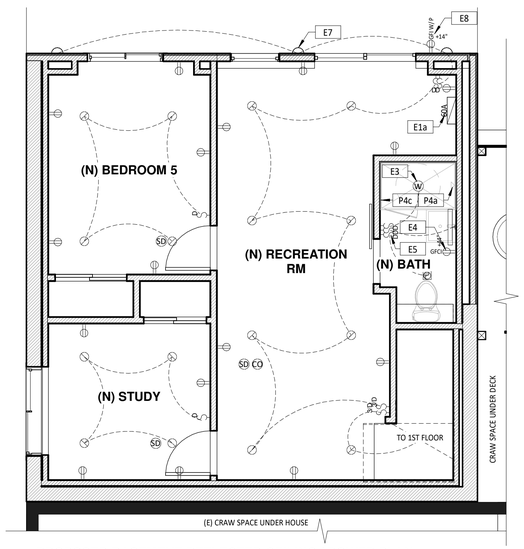

3 PROPOSED BASEMENT REFLECTED CEILING / POWER PLAN
1/4" = 1'-0"

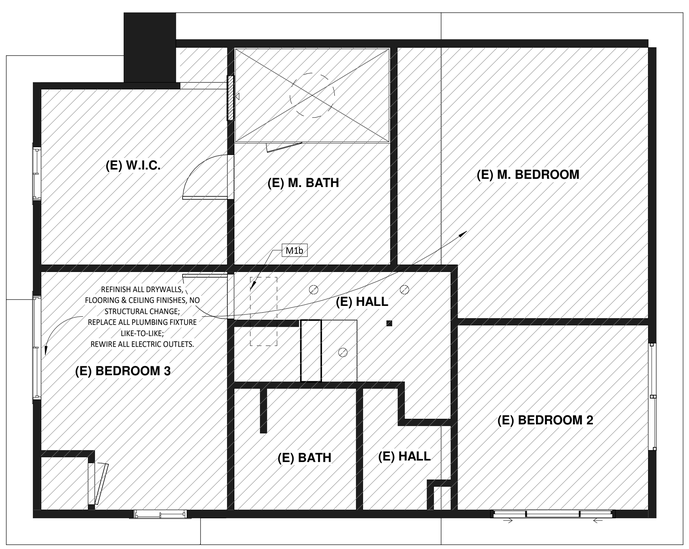

2 EXISTING 2ND FLOOR RCP/POWER PLAN (NO CHANGE)
1/4" = 1'-0"

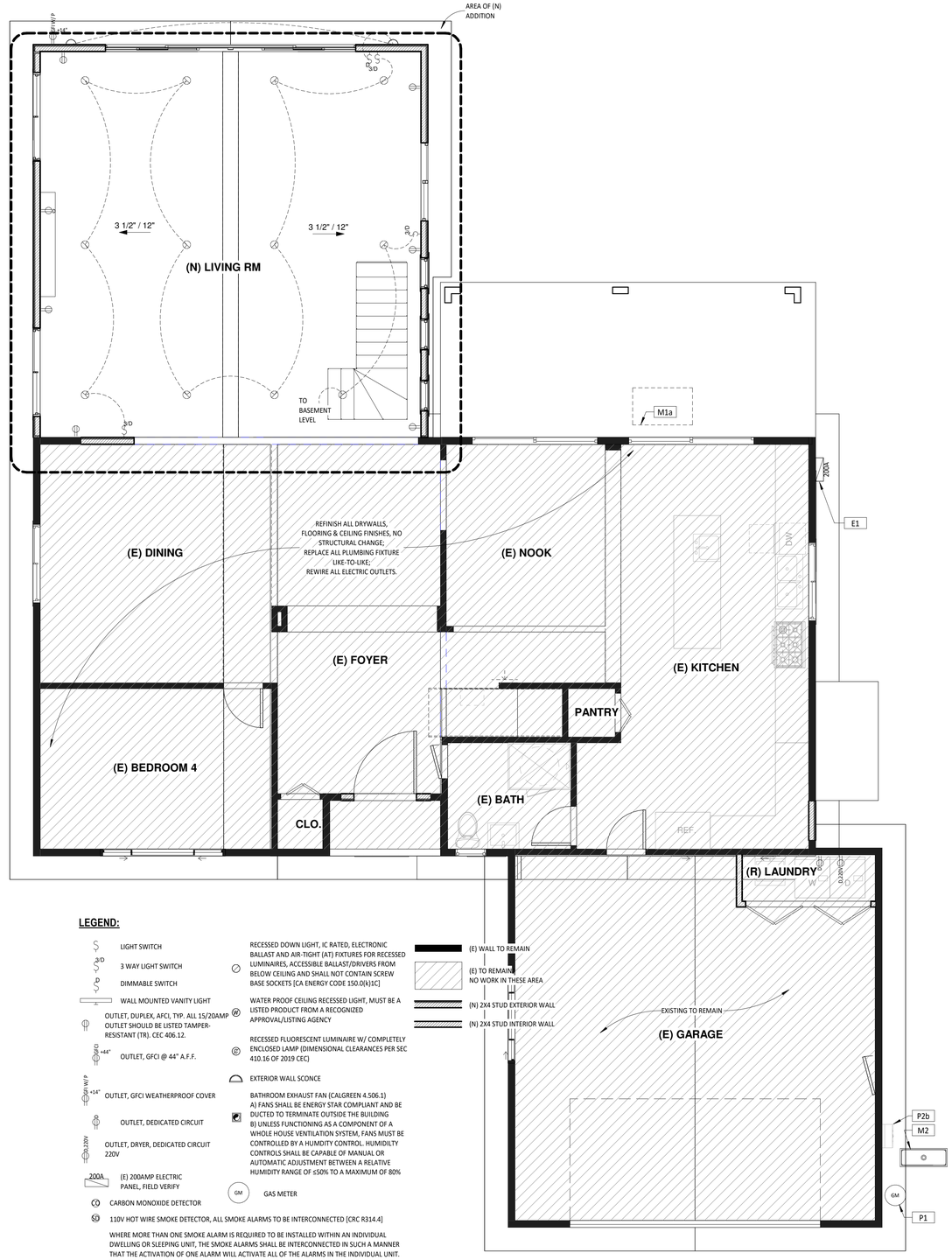

1 PROPOSED 1ST FLOOR REFLECTED CEILING / POWER PLAN
1/4" = 1'-0"

N

LEGEND:

- LIGHT SWITCH
- 3 WAY LIGHT SWITCH
- DIMMABLE SWITCH
- WALL MOUNTED VANITY LIGHT
- OUTLET, DUPLEX, AFCI, TYP. ALL 15/20AMP OUTLET SHOULD BE LISTED TAMPER-RESISTANT (TR). CEC 406.12.
- OUTLET, GFCI @ 44" A.F.F.
- OUTLET, GFCI WEATHERPROOF COVER
- OUTLET, DEDICATED CIRCUIT
- OUTLET, DRYER, DEDICATED CIRCUIT 220V
- (E) 200AMP ELECTRIC PANEL, FIELD VERIFY
- CARBON MONOXIDE DETECTOR
- 110V HOT WIRE SMOKE DETECTOR, ALL SMOKE ALARMS TO BE INTERCONNECTED [CRC R314.4]

WHERE MORE THAN ONE SMOKE ALARM IS REQUIRED TO BE INSTALLED WITHIN AN INDIVIDUAL DWELLING OR SLEEPING UNIT, THE SMOKE ALARMS SHALL BE INTERCONNECTED IN SUCH A MANNER THAT THE ACTIVATION OF ONE ALARM WILL ACTIVATE ALL OF THE ALARMS IN THE INDIVIDUAL UNIT. THE ALARM SHALL BE CLEARLY AUDIBLE IN ALL BEDROOMS OVER BACKGROUND NOISE LEVELS WITH ALL INTERVENING DOORS CLOSED." [CRC R314.4]

NOTE: ALL OUTLETS TO BE TAMPER RESISTANT OUTLETS FOR ALL 125 VOLT, 15 AND 20 AMP RECEPTACLES FOR ALL AREAS OF SINGLE FAMILY HOME (INCLUDING THOSE INSTALLED ON THE EXTERIOR) *(CEC 406.11 & 210.52)*.

- RECESSED DOWN LIGHT, IC RATED, ELECTRONIC BALLAST AND AIR-TIGHT (AT) FIXTURES FOR RECESSED LUMINAIRES, ACCESSIBLE BALLAST/DRIVERS FROM BELOW CEILING AND SHALL NOT CONTAIN SCREW BASE SOCKETS [CA ENERGY CODE 150.0(k)1C]
- WATER PROOF CEILING RECESSED LIGHT, MUST BE A LISTED PRODUCT FROM A RECOGNIZED APPROVAL/LISTING AGENCY
- RECESSED FLUORESCENT LUMINAIRE W/ COMPLETELY ENCLOSED LAMP (DIMENSIONAL CLEARANCES PER SEC 410.16 OF 2019 CEC)
- EXTERIOR WALL SCONCE
- BATHROOM EXHAUST FAN (CALGREEN 4.506.1)
  A) FANS SHALL BE ENERGY STAR COMPLIANT AND BE DUCTED TO TERMINATE OUTSIDE THE BUILDING
  B) UNLESS FUNCTIONING AS A COMPONENT OF A WHOLE HOUSE VENTILATION SYSTEM, FANS MUST BE CONTROLLED BY A HUMIDITY CONTROL. HUMIDITY CONTROLS SHALL BE CAPABLE OF MANUAL OR AUTOMATIC ADJUSTMENT BETWEEN A RELATIVE HUMIDITY RANGE OF ≤50% TO A MAXIMUM OF 80%
- GAS METER

- (E) WALL TO REMAIN
- (E) TO REMAIN NO WORK IN THESE AREA
- (N) 2X4 STUD EXTERIOR WALL
- (N) 2X4 STUD INTERIOR WALL

REFLECTED CEILING & POWER PLAN - GENERAL NOTES

1. GENERAL CONTRACTOR TO VERIFY "ALL" LIGHTING & ELECTRICAL SPECIFICATIONS WITH OWNER PRIOR TO INSTALLATION. ALL ELECTRICAL LIGHTING TO BE SELECTED BY OWNER. CONTRACTOR TO INCLUDE ALL LIGHTING FIXTURES IN PROPOSAL
2. GENERAL CONTRACTOR TO VERIFY "ALL" SUBPANEL WITH OWNER PRIOR TO INSTALLATION.
3. ALL LIGHT SWITCHES TO BE MOUNTED @ +48" TO CENTERLINE (TYP. U.O.N. VERIFY ALL MOUNTING HEIGHTS WITH OWNER.)
4. ALL LIGHT SWITCHES SHOWN ADJACENT TO EACH OTHER TO BE GANGED AND COVERED WITH ONE PLATE, TYP.
5. ALL DIMMER LIGHT SWITCHES TO BE TOGGLE TYPE.
6. ALL OUTDOOR LIGHTING SHALL BE SUITEABLE FOR DAMP LOCATION, HIGH EFFICACY OR CONTROLLED BY ALL OF THE FOLLOWING (1) A MANUAL ON/OFF SWITCH, (2) A MOTION SENSOR, AND (3) A PHOTOCONTROL THAT AUTOMATICALLY TURNS THE OUTDOOR LIGHTING OFF DURING DAYLIGHT HOURS
7. ALL ELECTRICAL, TELEPHONE, ETC. OUTLETS TO BE MOUNTED VERTICALLY @ +12" TO CENTERLINE, TYP. U.O.N.
8. ALL PLUMBING VENTS SHALL TERMINATE NOT LESS THAN 6" ABOVE THE ROOF NOR LESS THAN 1' FROM ANY VERTICAL SURFACE. VENTS SHALL TERMINATE NOT LESS THAN 10" FROM OR 3' ABOVE ANY WINDOW, DOOR, OPENING, AIR INTAKE, OR VENT SHAFT NOR 3' FROM LOT LINE. [CPC 906]
9. AFCI (ARC-FAULT CIRCUIT-INTERRUPTER) PROTECTION IS REQUIRED FOR ALL 120V 15-& 20-AMP CIRCUITS. [CEC210.12A]

ADDITIONAL NOTES - BATHROOM

BATHROOM ELECTRICAL

1. ALL INSTALLED LIGHTING SHALL BE HIGH EFFICACY. [CNC 150.0(K)1A].
2. AT LEAST ONE LIGHT SHALL BE CONTROLLED BY A VACANCY SENSOR (A MANUAL-ON, AUTOMATIC-OFF OCCUPANCY SENSOR). [CNC 150.0(K)2A].
3. EXHAUST FANS MUST BE SWITCHED SEPARATE FROM LIGHTING, WITH THE EXCEPTION THAT LIGHTING INTEGRAL TO AN EXHAUST FAN CAN BE ON THE SAME SWITCH IF THE FAN IS CONTROLLED BY A HUMIDISTAT THAT CONTINUES ITS OPERATION AFTER THE LIGHT IS OFF.
4. ALL RECEPTACLE OUTLETS IN BATHROOMS SHALL BE GFCI PROTECTED [CEC 210.8A1].
5. ALL RECEPTACLE OUTLETS IN BATHROOMS SHALL BE TAMPER RESISTANT [CEC 406.12A].
6. WHEN A BATHTUB OR SHOWER STALL IS IN AN AREA NOT TECHNICALLY CONSIDERED A BATHROOM (BY THE DEFINITIONS IN THE ELECTRICAL CODE), RECEPTACLES WITHIN 6 FT. OF THE TUB/SHOWER STALL MUST BE GFCIPROTECTED [CEC210.8A9].
7. A RECEPTACLE OUTLET IS REQUIRED WITHIN 3 FEET OF EACH WASH BASIN LOCATION. IT MAY BE ON THE WALL, OR AN ADJACENT PARTITION, OR ON THE FACE OR SIDE OF THE CABINET NOT MORE THAN 12 INCHES BELOW THE TOP OF THE BASIN [CEC 210.52D].
8. RECEPTACLES CANNOT BE FACE-UP IN A VANITY SURFACE; LISTED POP-UP RECEPTACLES ARE ALLOWED [CEC 406.5E & 210.52D].
9. A MINIMUM OF ONE 20-AMP CIRCUIT IS REQUIRED FOR THE RECEPTACLES IN THE BATHROOM(S). THIS CIRCUIT CAN HAVE NO OTHER OUTLETS, INCLUDING LIGHTS [CEC 210.11C3]. IF A 20-AMP CIRCUIT SERVES ONLY ONE (1) BATHROOM, LIGHTS AND FANS CAN BE ON THE SAME CIRCUIT WITH THE RECEPTACLES IN THAT BATHROOM [CEC 210.11C3 EXCEPTION].
10. HYDRO-MASSAGE TUBS REQUIRE AN INDIVIDUAL (DEDICATED) BRANCH CIRCUIT AND READILY ACCESSIBLE GFCI PROTECTION [CEC 680.71]. AN ACCESS DOOR IS REQUIRED AND MUST BE LARGE ENOUGH TO REMOVE THE MOTOR AND PUMP.
    CORD-CONNECTED EQUIPMENT MUST HAVE THE RECEPTACLE FACING THE OPENING AND BE NO MORE THAN ONE FOOT BEHIND THE ACCESS HATCH [CEC 680.73].
11. RECESSED LIGHT FIXTURES IN SHOWER ENCLOSURES MUST BE LISTED FOR A DAMP OR WET LOCATION [CEC 410.10A].
12. PENDANT LIGHT FIXTURES, TRACK LIGHTS, AND PADDLE FANS SHALL NOT BE INSTALLED LOWER THAN 8 FEET ABOVE THE FLOOD-LEVEL RIM OF A TUB, INCLUDING THE AREA 3 FEET PAST THE EDGE OF THE TUB [CEC 410.10D].
13. ELECTRICAL PANELS SHALL NOT BE INSTALLED IN BATHROOMS [CEC 240.24E].
14. SWITCHES AND RECEPTACLES ARE NOT ALLOWED IN BATHTUB OR SHOWER SPACES [CEC 404.4C & 406.9C].

BATHROOM MECHANICAL

1. MECHANICAL VENTILATION IS REQUIRED IN ALL BATHROOMS WITH TUBS OR SHOWERS. THE FAN MUST MOVE A MINIMUM 50 CFM OF AIR AND BE SEPARATELY SWITCHED FROM THE LIGHTING. FANS THAT OPERATE CONTINUOUSLY CAN BE 20 CFM. THE DUCT MUST TERMINATE ON THE EXTERIOR NOT LESS THAN 3 FEET FROM OPENINGS INTO THE BUILDING [CMC 502.2.1].
2. BATHS WITH NO TUB OR SHOWER (HALF BATHS) DO NOT REQUIRE MECHANICAL VENTILATION IF THEY ARE PROVIDED WITH A WINDOW AT LEAST 3 SQ. FT. HALF OF WHICH IS OPENABLE [CRC R303.3].

BATHROOM PLUMBING, GENERAL

1. ALL PIPING ¾ INCH OR MORE IN DIAMETER AND ALL HOT WATER PIPES ASSOCIATED WITH A RECIRCULATION SYSTEM MUST BE INSULATED WITH MIN. 1-INCH THICK INSULATION. EXISTING INACCESSIBLE PIPING DOES NOT REQUIRE INSULATION [CNC 150.0(l)2].
2. NEWLY INSTALLED PLUMBING FIXTURES SHALL BE WATER-CONSERVING IN COMPLIANCE WITH THE CALIFORNIA PLUMBING CODE AND GREEN BUILDING STANDARDS. WATER CLOSETS SHALL NOT EXCEED 1.28 GALLONS PER FLUSH, SHOWERHEADS SHALL NOT EXCEED 1.8 GPM AND NEW LAVATORY FAUCETS SHALL NOT EXCEED 1.2 GPM AT 60 PSI. [CPC 407.2, 408.2 & 411.2] ALL EXISTING PLUMBING FIXTURES NOT INCLUDED IN THE SCOPE OF NEW WORK SHALL BE REPLACED IF NECESSARY TO COMPLY WITH SB407 PLUMBING FIXTURES REPLACEMENT REQUIREMENTS – SEE WATER CONSERVATION CERTIFICATION FORM.

BATHROOM PLUMBING, TOILETS & BIDETS

1. TOILETS AND BIDETS REQUIRE A MINIMUM 15 INCHES OF CLEARANCE FROM THE CENTERLINE OF THE BOWL TO EACH SIDE, AND 24 INCHES OF CLEARANCE FROM THE FRONT EDGE OF THE BOWL [CPC 402.5]. THE MAXIMUM FLOW RATE IS 1.28 GPF [CPC 403.2.1].
2. LAVATORY SINKS REQUIRE A MINIMUM OF 24 INCHES FRONT CLEARANCE [CPC 402.5].
3. SHOWERS REQUIRE A MINIMUM 2 INCH DRAIN AND TRAP [CPC TABLE 702.1].
4. ALL SHOWER COMPARTMENTS SHALL HAVE A MINIMUM FINISHED INTERIOR OF 1024 SQUARE INCHES AND SHALL BE CAPABLE OF ENCOMPASSING A 30 INCH DIAMETER CIRCLE [CPC 408.6].THE CURB MAY ENCROACH ON THESE SIZE REQUIREMENTS. ALL SURFACES SHALL BE WATERPROOF UP TO 72 INCHES ABOVE THE DRAIN INLET [CRC R307.2]. THRESHOLDS SHALL BE OF SUFFICIENT WIDTH TO ACCOMMODATE A MINIMUM 22 INCH CLEAR EGRESS OPENING FROM THE SHOWER [CPC 408.5].
5. SAFETY GLASS (TEMPERED OR LAMINATED) IS REQUIRED FOR ALL GLASS SHOWER DOORS AND PARTITIONS AND FOR WINDOWS IN WALLS FACING THE TUB OR SHOWER AND LOCATED LESS THAN 60 INCHES ABOVE THE STANDING SURFACE OF THE TUB/SHOWER AND WITHIN 60 INCHES HORIZONTALLY [CRC R308.4.1&5].
6. THE MAXIMUM WATER TEMPERATURE TO A SHOWER OR TUB/SHOWER COMBINATION IS 120F. THE WATER HEATER THERMOSTAT CANNOT BE USED AS THE CONTROL FOR THIS TEMPERATURE. VALVES SHALL PROVIDE SCALD AND THERMAL SHOCK PROTECTION, AND BE PRESSURE-BALANCED, THERMOSTATIC, OR COMBINATION PRESSURE-BALANCED/THERMOSTATIC MIXING IN ACCORDANCE WITH ASSE 1016 OR ASME A112.18.1/CSA B125.1. [CPC 408.3].

KERELATION LLC
Building, Design, Planning, Environment & BIM
-Your Virtual Design and Construction Manager-
3190 VERDANT WAY, SAN JOSE, CA 95117
TEL: 408.551.0705
EMAIL: hello@kerelation.com

COPYRIGHT © 2022

KENNY LN RESIDENCE LEGALIZATION

NIRVANA PROPERTY LLC
10315 KENNY LN SAN JOSE 95127

No.	Description	Date
	PLN REVIEW SUBMISSION	05.31.22
	ISSUED FOR PLAN CHECK	08.01.22

PROPOSED REFLECTED CEILING & POWER PLANS

SCALE	1/4" = 1'-0"
PROJECT NO	220423
SHEET NUMBER	A5

COPYRIGHT © 2022 KERELATION LLC

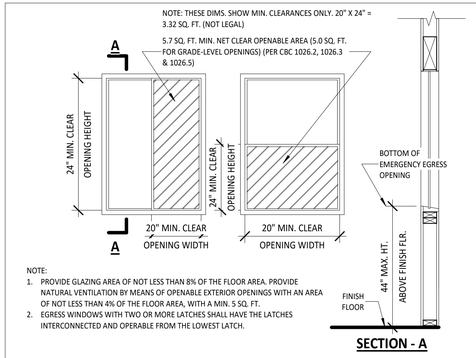

NOTE:
1. PROVIDE GLAZING AREA OF NOT LESS THAN 8% OF THE FLOOR AREA. PROVIDE NATURAL VENTILATION BY MEANS OF OPENABLE EXTERIOR OPENINGS WITH AN AREA OF NOT LESS THAN 4% OF THE FLOOR AREA, WITH A MIN. 5 SQ. FT.
2. EGRESS WINDOWS WITH TWO OR MORE LATCHES SHALL HAVE THE LATCHES INTERCONNECTED AND OPERABLE FROM THE LOWEST LATCH.

SECTION - A

(16) EGRESS WINDOW REQUIREMENTS
1 1/2" = 1'-0"

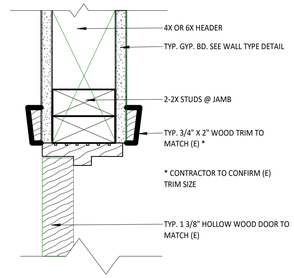

(12) TYP. INT. DOOR HEAD
3" = 1'-0"

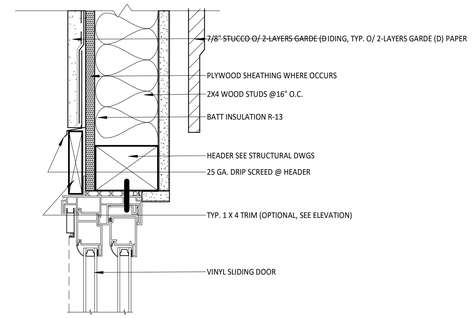

(8) SLIDING DOOR HEAD, TYP.
3" = 1'-0"

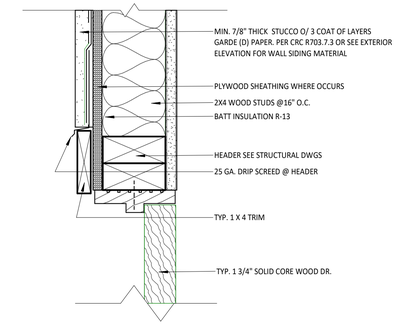

(4) TYP. EXT. DOOR HEAD & JAMB
3" = 1'-0"

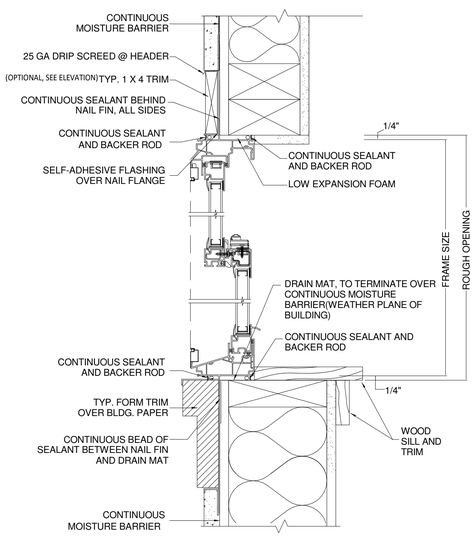

(14) DOUBLE HUNG WINDOW HEAD & SILL
3" = 1'-0"

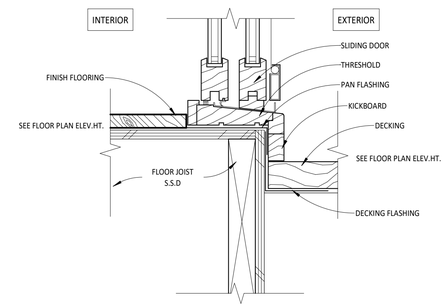

(7) SLIDING DOOR SILL @ WOOD DECK, TYP.
3" = 1'-0"

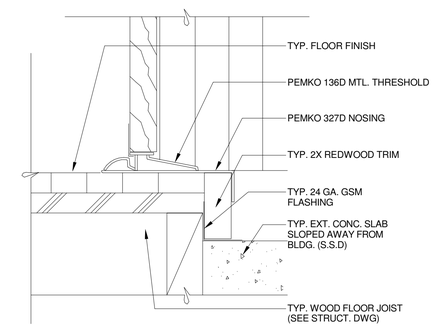

(3) TYP. EXT. DOOR SILL @ RAISED FLOOR
3" = 1'-0"

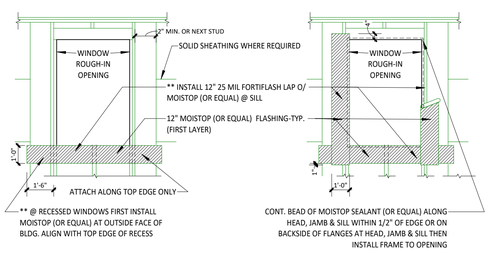

DETAIL #1 **DETAIL #2**

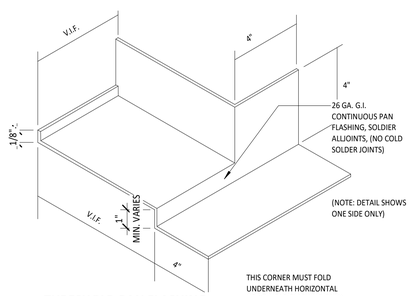

THRESHOLD PAN FLASHING

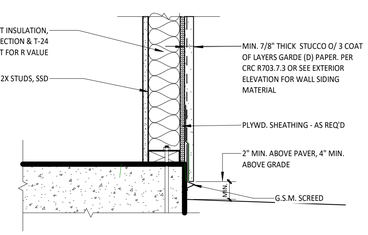

(2) STUCCO WALL TO FOUNDATION @ CONC. SLAB
1 1/2" = 1'-0"

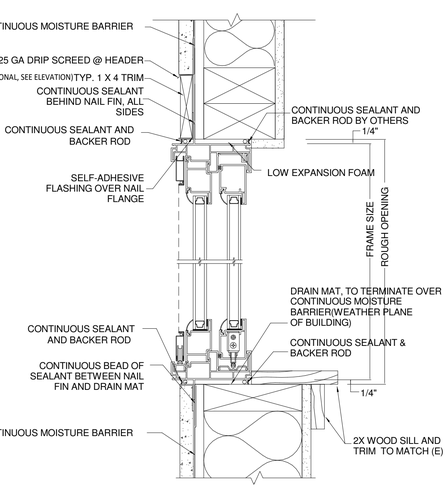

(13) SLIDING WINDOW HEAD & SILL (JAMB SIM.)
3" = 1'-0"

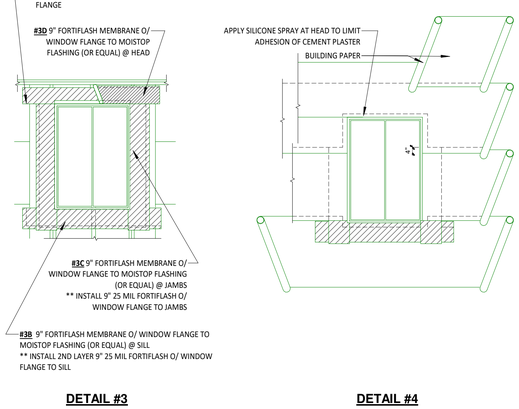

DETAIL #3 **DETAIL #4**

(9) WINDOW FLASHING, TYP.
1/4" = 1'-0"

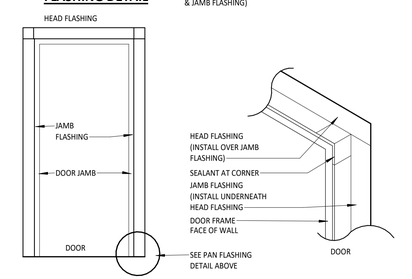

FLASHING DETAIL

(5) DOOR FLASHING, TYP.
3" = 1'-0"

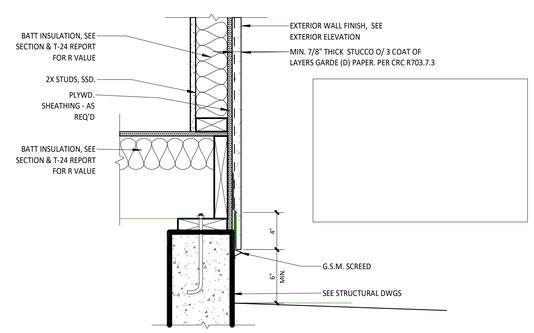

(1) STUCCO WALL TO FOUNDATION @ RAISED FLOOR
1 1/2" = 1'-0"

KERELATION LLC
Building, Design, Planning, Environment & BIM
-Your Virtual Design and Construction Manager-
3190 VERDANT WAY, SAN JOSE, CA 95117
TEL: 408.551.0705
EMAIL: hello@kerelation.com

COPYRIGHT © 2022

KENNY LN RESIDENCE LEGALIZATION

NIRVANA PROPERTY LLC
10315 KENNY LN SAN JOSE 95127

No.	Description	Date
	PLN REVIEW SUBMISSION	05.31.22
	ISSUED FOR PLAN CHECK	08.01.22

DETAILS

SCALE	As indicated
PROJECT NO	220423
SHEET NUMBER	A6

COPYRIGHT © 2022 KERELATION LLC

4 DRIVEWAY
INTERLOCKING PAVERS

2 ROOFING
ASPHALTIC SHINGLE, CHARCOAL

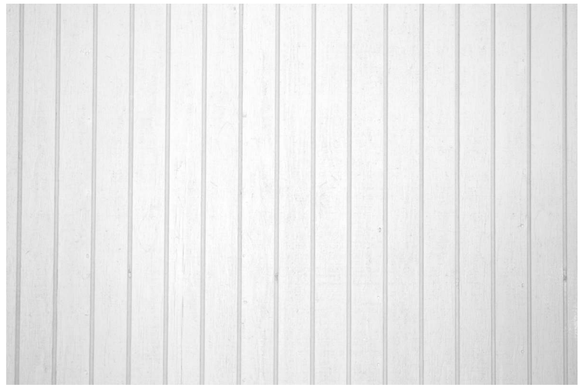

5 SIDING @ BASE
VERTICAL SIDING, WHITE COLOR

3 WALKWAY / PATIO PAVING
CONNECTICUT BLUESTONE

1 STUCCO
OFF WHITE COLOR

KERELATION LLC
Building, Design, Planning, Environment & BIM
-Your Virtual Design and Construction Manager-
3190 VERDANT WAY, SAN JOSE, CA 95117
TEL: 408.551.0705
EMAIL: hello@kerelation.com
COPYRIGHT © 2022

KENNY LN RESIDENCE LEGALIZATION

NIRVANA PROPERTY LLC
10315 KENNY LN SAN JOSE 95127

No.	Description	Date
	ISSUED FOR PLAN CHECK	08.01.22

COLOR /MATERIALS BOARD

SCALE	
PROJECT NO	220423
SHEET NUMBER	A8

COPYRIGHT © 2022 KERELATION LLC

GENERAL INFORMATION					
01	Project Name	Kenny Lane Addition			
02	Run Title	Title 24 Analysis			
03	Project Location	10315 Kenny Lane			
04	City	San Jose	05	Standards Version	2019
06	Zip code	95127	07	Software Version	EnergyPro 8.3
08	Climate Zone	4	09	Front Orientation (deg/ Cardinal)	45
10	Building Type	Single family	11	Number of Dwelling Units	1
12	Project Scope	AdditionAlteration	13	Number of Bedrooms	4
14	Addition Cond. Floor Area (ft^2)	1266	15	Number of Stories	3
16	Existing Cond. Floor Area (ft^2)	2237	17	Fenestration Average U-factor	0.3
18	Total Cond. Floor Area (ft^2)	3503	19	Glazing Percentage (%)	21.08%
20	ADU Bedroom Count	n/a	21	ADU Conditioned Floor Area	n/a
22	Is Natural Gas Available?	Yes			

COMPLIANCE RESULTS	
01	Building Complies with Computer Performance
02	This building incorporates features that require field testing and/or verification by a certified HERS rater under the supervision of a CEC-approved HERS provider.
03	This building incorporates one or more Special Features shown below

ENERGY USE SUMMARY

Energy Use (kTDV/ft^2-yr)	Standard Design	Proposed Design	Compliance Margin	Percent Improvement
Space Heating	58.21	60.26	-2.05	-3.5
Space Cooling	40.96	38.35	2.61	6.4
IAQ Ventilation	3.26	3.26	0	0
Water Heating	10.98	10.98	0	0
Self Utilization/Flexibility Credit	n/a	0	0	n/a
Compliance Energy Total	**113.41**	**112.85**	**0.56**	**0.5**

REQUIRED SPECIAL FEATURES

The following are features that must be installed as condition for meeting the modeled energy performance for this computer analysis.

- Cool roof
- New ductwork added is less than 40 ft. in length

HERS FEATURE SUMMARY

The following is a summary of the features that must be field-verified by a certified HERS Rater as a condition for meeting the modeled energy performance for this computer analysis. Additional detail is provided in the buildng tables below. Registered CF2Rs and CF3Rs are required to be completed in the HERS Registry

Building-level Verifications:
- Indoor air quality ventilation

Cooling System Verifications:
- -- None --

Heating System Verifications:
- -- None --

HVAC Distribution System Verifications:
- Duct Sealing required if a duct system component, plenum, or air handling unit is altered

Domestic Hot Water System Verifications:
- -- None --

BUILDING - FEATURES INFORMATION

01	02	03	04	05	06	07
Project Name	Conditioned Floor Area (ft^2)	Number of Dwelling Units	Number of Bedrooms	Number of Zones	Number of Ventilation Cooling Systems	Number of Water Heating Systems
Kenny Lane Addition	3503	1	4	2	0	1

ZONE INFORMATION

01	02	03	04	05	06	07
Zone Name	Zone Type	HVAC System Name	Zone Floor Area (ft^2)	Avg. Ceiling Height	Water Heating System 1	Water Heating System 2
Existing Living Area	Conditioned	HVAC System1	2237	8	DHW Sys 1	N/A
New Living Area	Conditioned	HVAC System1	1266	8	DHW Sys 1	N/A

OPAQUE SURFACES

01	02	03	04	05	06	07	08	09	10	11
Name	Zone	Construction	Azimuth	Orientation	Gross Area (ft^2)	Window and Door Area (ft2)	Tilt (deg)	Wall Exceptions	Status	Verified Existing Condition
Front Wall	Existing Living Area	R-0 Wall	45	Front	240	71	90	none	Existing	No
Left Wall	Existing Living Area	R-0 Wall	135	Left	216	20	90	none	Existing	No
Rear Wall	Existing Living Area	R-0 Wall	225	Back	200	148	90	none	Existing	No
Right Wall	Existing Living Area	R-0 Wall	315	Right	216	15	90	none	Existing	No
Front Wall 2	Existing Living Area	R-0 Wall	45	Front	280	34	90	none	Existing	No
Left Wall 2	Existing Living Area	R-0 Wall	135	Left	208	19	90	none	Existing	No
Rear Wall 2	Existing Living Area	R-0 Wall	225	Back	280	96	90	none	Existing	No
Right Wall 2	Existing Living Area	R-0 Wall	315	Right	208	58	90	none	Existing	No
Front Wall 3	New Living Area	R-13 Wall	45	Front	200	0	90	none	New	n/a
Left Wall 3	New Living Area	R-13 Wall	135	Left	200	8.5	90	none	New	n/a
Rear Wall 3	New Living Area	R-13 Wall	225	Back	200	68	90	none	New	n/a
Right Wall 3	New Living Area	R-13 Wall	315	Right	200	0	90	none	New	n/a
Front Wall 4	New Living Area	R-13 Wall	45	Front	200	0	90	none	New	n/a
Left Wall 4	New Living Area	R-13 Wall	135	Left	200	42	90	none	New	n/a
Rear Wall 4	New Living Area	R-13 Wall	225	Back	200	128	90	none	New	n/a
Right Wall 4	New Living Area	R-13 Wall	315	Right	200	58	90	none	New	n/a
Interior Surface	Existing Living Area>>__Garage__	R-0 Wall1	n/a	n/a	150	18	n/a		Existing	No

OPAQUE SURFACES

01	02	03	04	05	06	07	08	09	10	11
Name	Zone	Construction	Azimuth	Orientation	Gross Area (ft^2)	Window and Door Area (ft2)	Tilt (deg)	Wall Exceptions	Status	Verified Existing Condition
Interior Surface 2	New Living Area>>Existing Living Area	R-0 Wall1	n/a	n/a	200	0	n/a		New	n/a
Roof 2	Existing Living Area	R-11 Roof Attic	n/a	n/a	391	n/a	n/a		Existing	No
Roof 3	Existing Living Area	R-11 Roof Attic	n/a	n/a	923	n/a	n/a		Existing	No
Roof 4	New Living Area	R-30 Roof Attic	n/a	n/a	633	n/a	n/a		New	n/a
Raised Floor	Existing Living Area	R-0 Floor No Crawlspace	n/a	n/a	1314	n/a	n/a		Existing	No
Front Wall 5	__Garage__	R-0 Wall	45	Front	192	0	90	none	Existing	No
Left Wall 5	__Garage__	R-0 Wall	135	Left	184	0	90	none	Existing	No
Rear Wall 5	__Garage__	R-0 Wall	225	Back	192	0	90	none	Existing	No
Right Wall 5	__Garage__	R-0 Wall	315	Right	184	0	90	none	Existing	No

OPAQUE SURFACES - CATHEDRAL CEILINGS

01	02	03	04	05	06	07	08	09	10	11	12	13	14
Name	Zone	Construction	Azimuth	Orientation	Area (ft^2)	Skylight Area (ft^2)	Roof Rise (x in 12)	Roof Reflectance	Roof Emittance	Cool Roof	Status	Verified Existing Condition	Existing Construction
Roof	__Garage__	R-0 Roof No Attic	0	n/a	570	0	0	0.1	0.85	No	Existing	No	

ATTIC

01	02	03	04	05	06	07	08	09	10
Name	Construction	Type	Roof Rise (x in 12)	Roof Reflectance	Roof Emittance	Radiant Barrier	Cool Roof	Status	Verified Existing Condition
Attic Existing Living Area	Attic RoofExisting Living Area	Ventilated	4	0.1	0.85	No	No	Existing	No
Attic New Living Area	Attic RoofNew Living Area	Ventilated	0	0.63	0.75	Yes	Yes	New	n/a

FENESTRATION / GLAZING

01	02	03	04	05	06	07	08	09	10	11	12	13	14	15	16
Name	Type	Surface	Orientation	Azimuth	Width (ft)	Height (ft)	Mult.	Area (ft^2)	U-factor	U-factor Source	SHGC	SHGC Source	Exterior Shading	Status	Verified Existing Condition
Window	Window	Front Wall	Front	45			1	4	1.19	Table 110.6-A	0.83	Table 110.6-B	Bug Screen	Existing	No
Window 2	Window	Front Wall	Front	45			1	40	1.19	Table 110.6-A	0.83	Table 110.6-B	Bug Screen	Existing	No
Window 3	Window	Left Wall	Left	135			1	20	1.19	Table 110.6-A	0.83	Table 110.6-B	Bug Screen	Existing	No
Window 4	Window	Rear Wall	Back	225			1	40	1.19	Table 110.6-A	0.83	Table 110.6-B	Bug Screen	Existing	No
Window - SGD	Window	Rear Wall	Back	225			1	54	0.3	NFRC	0.23	NFRC	Bug Screen	Altered	No
Window - SGD 2	Window	Rear Wall	Back	225			1	54	0.3	NFRC	0.23	NFRC	Bug Screen	Altered	No
Window 5	Window	Right Wall	Right	315			1	15	1.19	Table 110.6-A	0.83	Table 110.6-B	Bug Screen	Existing	No
Window 6	Window	Front Wall 2	Front	45			1	21	1.19	Table 110.6-A	0.83	Table 110.6-B	Bug Screen	Existing	No
Window 7	Window	Front Wall 2	Front	45			1	4	1.19	Table 110.6-A	0.83	Table 110.6-B	Bug Screen	Existing	No
Window 8	Window	Front Wall 2	Front	45			1	9	1.19	Table 110.6-A	0.83	Table 110.6-B	Bug Screen	Existing	No
Window 9	Window	Left Wall 2	Left	135			1	13	1.19	Table 110.6-A	0.83	Table 110.6-B	Bug Screen	Existing	No
Window 10	Window	Left Wall 2	Left	135			1	6	1.19	Table 110.6-A	0.83	Table 110.6-B	Bug Screen	Existing	No
Window 11	Window	Rear Wall 2	Back	225			1	28	1.19	Table 110.6-A	0.83	Table 110.6-B	Bug Screen	Existing	No
Window - SGD 3	Window	Rear Wall 2	Back	225			1	68	0.3	NFRC	0.23	NFRC	Bug Screen	Altered	No
Window 12	Window	Right Wall 2	Right	315			1	18	1.19	Table 110.6-A	0.83	Table 110.6-B	Bug Screen	Existing	No
Window - SGD 4	Window	Right Wall 2	Right	315			1	40	0.3	NFRC	0.23	NFRC	Bug Screen	Altered	No

FENESTRATION / GLAZING

01	02	03	04	05	06	07	08	09	10	11	12	13	14	15	16
Name	Type	Surface	Orientation	Azimuth	Width (ft)	Height (ft)	Mult.	Area (ft^2)	U-factor	U-factor Source	SHGC	SHGC Source	Exterior Shading	Status	Verified Existing Condition
Window 13	Window	Left Wall 3	Left	135			1	8.5	0.3	NFRC	0.23	NFRC	Bug Screen	New	n/a
Window 14	Window	Rear Wall 3	Back	225			1	15	0.3	NFRC	0.23	NFRC	Bug Screen	New	n/a
Window 15	Window	Rear Wall 3	Back	225			1	15	0.3	NFRC	0.23	NFRC	Bug Screen	New	n/a
Window - SGD 5	Window	Rear Wall 3	Back	225			1	38	0.3	NFRC	0.23	NFRC	Bug Screen	New	n/a
Window 16	Window	Left Wall 4	Left	135			1	21	0.3	NFRC	0.23	NFRC	Bug Screen	New	n/a
Window 17	Window	Left Wall 4	Left	135			1	21	0.3	NFRC	0.23	NFRC	Bug Screen	New	n/a
Window - SGD 6	Window	Rear Wall 4	Back	225			1	128	0.3	NFRC	0.23	NFRC	Bug Screen	New	n/a
Window - SGD 7	Window	Right Wall 4	Right	315			1	34	0.3	NFRC	0.23	NFRC	Bug Screen	New	n/a
Window 18	Window	Right Wall 4	Right	315			1	8	0.3	NFRC	0.23	NFRC	Bug Screen	New	n/a
Window 19	Window	Right Wall 4	Right	315			1	8	0.3	NFRC	0.23	NFRC	Bug Screen	New	n/a
Window 20	Window	Right Wall 4	Right	315			1	8	0.3	NFRC	0.23	NFRC	Bug Screen	New	n/a

OPAQUE DOORS

01	02	03	04	05	06
Name	Side of Building	Area (ft^2)	U-factor	Status	Verified Existing Condition
Door	Front Wall	27	0.5	Altered	No
Door 2	Interior Surface	18	0.5	Existing	No

SLAB FLOORS

01	02	03	04	05	06	07	08	09	10
Name	Zone	Area (ft^2)	Perimeter (ft)	Edge Insul. R-value and Depth	Edge Insul. R-value and Depth	Carpeted Fraction	Heated	Status	Verified Existing Condition
Slab	New Living Area	633	100	none	0	80%	No	New	n/a
Slab 2	__Garage__	570	100	none	0	0%	No	Existing	No

OPAQUE SURFACE CONSTRUCTIONS

01	02	03	04	05	06	07	08
Construction Name	Surface Type	Construction Type	Framing	Total Cavity R-value	Interior / Exterior Continuous R-value	U-factor	Assembly Layers
R-0 Wall	Exterior Walls	Wood Framed Wall	2x4 @ 16 in. O. C.	R-0	None / None	0.361	Inside Finish: Gypsum Board Cavity / Frame: no insul. / 2x4 Exterior Finish: 3 Coat Stucco
R-13 Wall	Exterior Walls	Wood Framed Wall	2x4 @ 16 in. O. C.	R-13	None / None	0.101	Inside Finish: Gypsum Board Cavity / Frame: R-13 / 2x4 Exterior Finish: 3 Coat Stucco
R-0 Roof No Attic	Cathedral Ceilings	Wood Framed Ceiling	2x4 @ 16 in. O. C.	R-0	None / None	0.484	Roofing: Light Roof (Asphalt Shingle) Roof Deck: Wood Siding/sheathing/decking Cavity / Frame: no insul. / 2x4 Inside Finish: Gypsum Board
R-0 Wall1	Interior Walls	Wood Framed Wall	2x4 @ 16 in. O. C.	R-0	None / None	0.277	Inside Finish: Gypsum Board Cavity / Frame: no insul. / 2x4 Other Side Finish: Gypsum Board
Attic RoofExisting Living Area	Attic Roofs	Wood Framed Ceiling	2x4 @ 24 in. O. C.	R-0	None / None	0.644	Roofing: Light Roof (Asphalt Shingle) Roof Deck: Wood Siding/sheathing/decking Cavity / Frame: no insul. / 2x4
Attic RoofNew Living Area	Attic Roofs	Wood Framed Ceiling	2x4 @ 24 in. O. C.	R-0	None / None	0.644	Roofing: Light Roof (Asphalt Shingle) Roof Deck: Wood Siding/sheathing/decking Cavity / Frame: no insul. / 2x4
R-11 Roof Attic	Ceilings (below attic)	Wood Framed Ceiling	2x4 @ 24 in. O. C.	R-11	None / None	0.081	Over Ceiling Joists: R-1.9 insul. Cavity / Frame: R-9.1 / 2x4 Inside Finish: Gypsum Board
R-30 Roof Attic	Ceilings (below attic)	Wood Framed Ceiling	2x4 @ 24 in. O. C.	R-30	None / None	0.032	Over Ceiling Joists: R-20.9 insul. Cavity / Frame: R-9.1 / 2x4 Inside Finish: Gypsum Board

OPAQUE SURFACE CONSTRUCTIONS

01	02	03	04	05	06	07	08
Construction Name	Surface Type	Construction Type	Framing	Total Cavity R-value	Interior / Exterior Continuous R-value	U-factor	Assembly Layers
R-0 Floor No Crawlspace	Exterior Floors	Wood Framed Floor	2x12 @ 16 in. O. C.	R-0	None / None	0.24	Floor Surface: Carpeted Floor Deck: Wood Siding/sheathing/decking Cavity / Frame: no insul. / 2x12

BUILDING ENVELOPE - HERS VERIFICATION

01	02	03	04
Quality Insulation Installation (QII)	High R-value Spray Foam Insulation	Building Envelope Air Leakage	CFM50
Not Required	Not Required	Not Required	n/a

WATER HEATING SYSTEMS

01	02	03	04	05	06	07	08	09	10
Name	System Type	Distribution Type	Water Heater Name (#)	Solar Heating System	Compact Distribution	HERS Verification	Status	Verified Existing Condition	Existing Water Heating System
DHW Sys 1	Domestic Hot Water (DHW)	Standard Distribution System	DHW Heater 1 (1)	n/a	None	n/a	Existing	No	

WATER HEATERS

01	02	03	04	05	06	07	08	09	10	11	12	13	14
Name	Heating Element Type	Tank Type	# of Units	Tank Vol. (gal)	Energy Factor or Efficiency	Input Rating or Pilot	Tank Insulation R-value (Int/Ext)	Standby Loss or Recovery Eff	1st Hr. Rating or Flow Rate	NEEA Heat Pump Brand or Model	Tank Location or Ambient Condition	Status	Verified Existing Condition
DHW Heater 1	Gas	Small Storage	1	50	0.57-EF	<= 75 kBtu/hr	0	80	n/a	n/a	n/a	Existing	No

WATER HEATING - HERS VERIFICATION

01	02	03	04	05	06	07	08
Name	Pipe Insulation	Parallel Piping	Compact Distribution	Compact Distribution Type	Recirculation Control	Central DHW Distribution	Shower Drain Water Heat Recovery
DHW Sys 1 - 1/1	Not Required	Not Required	Not Required	None	Not Required	Not Required	Not Required

SPACE CONDITIONING SYSTEMS

01	02	03	04	05	06	07	08	09	10	11
Name	System Type	Heating Unit Name	Cooling Unit Name	Fan Name	Distribution Name	Required Thermostat Type	Status	Verified Existing Condition	Heating Equipment Count	Cooling Equipment Count
HVAC System1	Heating and cooling system other	Heating Component 1	Cooling Component 1	HVAC Fan 1	Air Distribution System 1	n/a	Existing	No	2	2

HVAC - HEATING UNIT TYPES

01	02	03	04
Name	System Type	Number of Units	Heating Efficiency
Heating Component 1	Central gas furnace	2	AFUE-80

Carstairs Energy Inc.
2238 Bayview Heights Drive, Suite E
Los Osos, CA 93402
805-904-9048 title24@yahoo.com
www.carstairsenergy.com

Kenny Lane Addition

CABEC
California Association of Building Energy Consultants
CERTIFIED ENERGY ANALYST
Timothy Carstairs
Call Us for HERS Testing
Serving San Luis Obispo and Santa Barbara Counties

T24.1 - ENERGY REPORT CF1R-PRF-01

HVAC - COOLING UNIT TYPES

01	02	03	04	05	06	07	08
Name	System Type	Number of Units	Efficiency EER/CEER	Efficiency SEER	Zonally Controlled	Mulit-speed Compressor	HERS Verification
Cooling Component 1	Central split AC	2	11.7	14	Not Zonal	Single Speed	Cooling Component 1-hers-cool

HVAC - DISTRIBUTION SYSTEMS

01	02	03	04	05	06	07	08	09	10	11	12	13	14	15	16
			Duct Ins. R-value		Duct Location		Surface Area								
Name	Type	Design Type	Supply	Return	Supply	Return	Supply	Return	Bypass Duct	Duct Leakage	HERS Verification	Status	Verified Existing Condition	Existing Distribution system	New Ducts 40 ft
Air Distribution System 1	Unconditioned attic	Non-Verified	R-6	R-6	Attic	Attic	n/a	n/a	No Bypass Duct	Existing (not specified)	Air Distribution System 1-hers-dist	Existing + New	No	n/a	n/a

HVAC - FAN SYSTEMS

01	02	03	04
Name	Type	Fan Power (Watts/CFM)	Name
HVAC Fan 1	HVAC Fan	0.58	HVAC Fan 1-hers-fan

HVAC FAN SYSTEMS - HERS VERIFICATION

01	02	03
Name	Verified Fan Watt Draw	Required Fan Efficacy (Watts/CFM)
HVAC Fan 1-hers-fan	Not Required	0

IAQ (INDOOR AIR QUALITY) FANS

01	02	03	04	05	06	07
Dwelling Unit	IAQ CFM	IAQ Watts/CFM	IAQ Fan Type	IAQ Recovery Effectiveness - SRE	IAQ Recovery Effectiveness - ASRE	HERS Verification
SFam IAQVentRpt	134	0.35	Exhaust	n/a	n/a	Yes

HERS RATER VERIFICATION OF EXISTING CONDITIONS

CalCERTS, Inc.
HERS PROVIDER

DOCUMENTATION AUTHOR'S DECLARATION STATEMENT

1. I certify that this Certificate of Compliance documentation is accurate and complete.

Documentation Author Name: Timothy Carstairs	Documentation Author Signature: Timothy Carstairs
Company: Carstairs Energy Inc.	Signature Date: 2022-07-22 09:43:56
Address: 2238 Bayview Heights Drive, Suite E	CEA/ HERS Certification Identification (If applicable): r160610042
City/State/Zip: Los Osos, CA 93402	Phone: 805-904-9048

RESPONSIBLE PERSON'S DECLARATION STATEMENT

I certify the following under penalty of perjury, under the laws of the State of California:

1. I am eligible under Division 3 of the Business and Professions Code to accept responsibility for the building design identified on this Certificate of Compliance.
2. I certify that the energy features and performance specifications identified on this Certificate of Compliance conform to the requirements of Title 24, Part 1 and Part 6 of the California Code of Regulations.
3. The building design features or system design features identified on this Certificate of Compliance are consistent with the information provided on other applicable compliance documents, worksheets, calculations, plans and specifications submitted to the enforcement agency for approval with this building permit application.

Responsible Designer Name: Tailong Ke	Responsible Designer Signature: [signature]
Company: KEREATIVE INTERNATIONAL CORPORATION	Date Signed: 2022-07-22 14:24:37
Address: 3190 Verdant Way	License: na
City/State/Zip: san jose, CA 95117	Phone: 408-921-0005

Digitally signed by CalCERTS. This digital signature is provided in order to secure the content of this registered document, and in no way implies Registration Provider responsibility for the accuracy of the information.

Easy to Verify at CalCERTS.com

RESIDENTIAL MEASURES SUMMARY RMS-1

Project Name: Kenny Lane Addition | Building Type: ☑ Single Family ☐ Addition Alone ☐ Multi Family ☑ Existing+ Addition/Alteration | Date: 7/22/2022
Project Address: 10315 Kenny Lane San Jose | California Energy Climate Zone: CA Climate Zone 04 | Total Cond. Floor Area: 3,503 | Addition: 1,266 | # of Units: 1

INSULATION

Construction	Type	Cavity	Area (ft²)	Special Features	Status
Floor	Wood Framed w/o Crawl Space	- no insulation	1,314		Existing
Wall	Wood Framed	- no insulation	169		Existing
Door	Opaque Door	- no insulation	27		Altered
Wall	Wood Framed	- no insulation	196		Existing
Wall	Wood Framed	- no insulation	52		Existing
Wall	Wood Framed	- no insulation	201		Existing
Roof	Wood Framed Attic	R 11	391		Existing
Demising	Wood Framed	- no insulation	132		Existing

FENESTRATION Total Area: 739 Glazing Percentage: 21.1 % New/Altered Average U-Factor: 0.30

Orientation	Area(ft²)	U-Fac	SHGC	Overhang	Sidefins	Exterior Shades	Status
Front (NE)	78.0	1.190	0.83	none	none	N/A	Existing
Left (SE)	39.0	1.190	0.83	none	none	N/A	Existing
Rear (SW)	68.0	1.190	0.83	none	none	N/A	Existing
Rear (SW)	176.0	0.300	0.23	none	none	N/A	Altered
Right (NW)	33.0	1.190	0.83	none	none	N/A	Existing
Right (NW)	40.0	0.300	0.23	none	none	N/A	Altered
Left (SE)	50.5	0.300	0.23	none	none	N/A	New
Rear (SW)	196.0	0.300	0.23	none	none	N/A	New
Right (NW)	58.0	0.300	0.23	none	none	N/A	New

HVAC SYSTEMS

Qty.	Heating	Min. Eff	Cooling	Min. Eff	Thermostat	Status
2	Central Furnace	80% AFUE	Split Air Conditioner	14.0 SEER	Setback	Existing

HVAC DISTRIBUTION

Location	Heating	Cooling	Duct Location	Duct R-Value	Status
HVAC System	Ducted	Ducted	Attic	6.0	Altered

WATER HEATING

Qty.	Type	Gallons	Min. Eff	Distribution	Status

RESIDENTIAL MEASURES SUMMARY RMS-1

Project Name: Kenny Lane Addition | Building Type: ☑ Single Family ☐ Addition Alone ☐ Multi Family ☑ Existing+ Addition/Alteration | Date: 7/22/2022
Project Address: 10315 Kenny Lane San Jose | California Energy Climate Zone: CA Climate Zone 04 | Total Cond. Floor Area: 3,503 | Addition: 1,266 | # of Units: 1

INSULATION

Construction	Type	Cavity	Area (ft²)	Special Features	Status
Wall	Wood Framed	- no insulation	246		Existing
Wall	Wood Framed	- no insulation	189		Existing
Wall	Wood Framed	- no insulation	184		Existing
Wall	Wood Framed	- no insulation	150		Existing
Roof	Wood Framed Attic	R 11	923		Existing
Wall	Wood Framed	R 13	1,296		New
Slab	Unheated Slab-on-Grade	- no insulation	633	Perim = 100'	New
Roof	Wood Framed Attic	R 30	633	Cool Roof	New

FENESTRATION Total Area: 739 Glazing Percentage: 21.1 % New/Altered Average U-Factor: 0.30

Orientation	Area(ft²)	U-Fac	SHGC	Overhang	Sidefins	Exterior Shades	Status

HVAC SYSTEMS

Qty.	Heating	Min. Eff	Cooling	Min. Eff	Thermostat	Status

HVAC DISTRIBUTION

Location	Heating	Cooling	Duct Location	Duct R-Value	Status

WATER HEATING

Qty.	Type	Gallons	Min. Eff	Distribution	Status

RESIDENTIAL MEASURES SUMMARY RMS-1

Project Name: Kenny Lane Addition | Building Type: ☑ Single Family ☐ Addition Alone ☐ Multi Family ☑ Existing+ Addition/Alteration | Date: 7/22/2022
Project Address: 10315 Kenny Lane San Jose | California Energy Climate Zone: CA Climate Zone 04 | Total Cond. Floor Area: 3,503 | Addition: 1,266 | # of Units: 1

INSULATION

Construction	Type	Cavity	Area (ft²)	Special Features	Status
Demising	Wood Framed	- no insulation	200		New

FENESTRATION Total Area: 739 Glazing Percentage: 21.1 % New/Altered Average U-Factor: 0.30

Orientation	Area(ft²)	U-Fac	SHGC	Overhang	Sidefins	Exterior Shades	Status

HVAC SYSTEMS

Qty.	Heating	Min. Eff	Cooling	Min. Eff	Thermostat	Status

HVAC DISTRIBUTION

Location	Heating	Cooling	Duct Location	Duct R-Value	Status

WATER HEATING

Qty.	Type	Gallons	Min. Eff	Distribution	Status

2019 Low-Rise Residential Mandatory Measures Summary

*NOTE: Low-rise residential buildings subject to the Energy Standards must comply with all applicable mandatory measures, regardless of the compliance approach used. Review the respective section for more information. *Exceptions may apply.*
(01/2020)

Building Envelope Measures:	
§ 110.6(a)1:	**Air Leakage.** Manufactured fenestration, exterior doors, and exterior pet doors must limit air leakage to 0.3 CFM per square foot or less when tested per NFRC-400, ASTM E283 or AAMA/WDMA/CSA 101/I.S.2/A440-2011.*
§ 110.6(a)5:	**Labeling.** Fenestration products and exterior doors must have a label meeting the requirements of § 10-111(a).
§ 110.6(b):	**Field fabricated exterior doors and fenestration** products must use U-factors and solar heat gain coefficient (SHGC) values from Tables 110.6-A, 110.6-B, or JA4.5 for exterior doors. They must be caulked and/or weather-stripped.*
§ 110.7:	**Air Leakage.** All joints, penetrations, and other openings in the building envelope that are potential sources of air leakage must be caulked, gasketed, or weather stripped.
§ 110.8(a):	**Insulation Certification by Manufacturers.** Insulation must be certified by the Department of Consumer Affairs, Bureau of Household Goods and Services (BHGS).
§ 110.8(g):	**Insulation Requirements for Heated Slab Floors.** Heated slab floors must be insulated per the requirements of § 110.8(g).
§ 110.8(i):	**Roofing Products Solar Reflectance and Thermal Emittance.** The thermal emittance and aged solar reflectance values of the roofing material must meet the requirements of § 110.8(i) and be labeled per §10-113 when the installation of a cool roof is specified on the CF1R.
§ 110.8(j):	**Radiant Barrier.** When required, radiant barriers must have an emittance of 0.05 or less and be certified to the Department of Consumer Affairs.
§ 150.0(a):	**Ceiling and Rafter Roof Insulation.** Minimum R-22 insulation in wood-frame ceiling; or the weighted average U-factor must not exceed 0.043. Minimum R-19 or weighted average U-factor of 0.054 or less in a rafter roof alteration. Attic access doors must have permanently attached insulation using adhesive or mechanical fasteners. The attic access must be gasketed to prevent air leakage. Insulation must be installed in direct contact with a continuous roof or ceiling which is sealed to limit infiltration and exfiltration as specified in § 110.7, including but not limited to placing insulation either above or below the roof deck or on top of a drywall ceiling.*
§ 150.0(b):	**Loose-fill Insulation.** Loose fill insulation must meet the manufacturer's required density for the labeled R-value.
§ 150.0(c):	**Wall Insulation.** Minimum R-13 insulation in 2x4 inch wood framing wall or have a U-factor of 0.102 or less, or R-20 in 2x6 inch wood framing or have a U-factor of 0.071 or less. Opaque non-framed assemblies must have an overall assembly U-factor not exceeding 0.102. Masonry walls must meet Tables 150.1-A or B.*
§ 150.0(d):	**Raised-floor Insulation.** Minimum R-19 insulation in raised wood framed floor or 0.037 maximum U-factor.*
§ 150.0(f):	**Slab Edge Insulation.** Slab edge insulation must meet all of the following: have a water absorption rate, for the insulation material alone without facings, no greater than 0.3 percent; have a water vapor permeance no greater than 2.0 perm per inch; be protected from physical damage and UV light deterioration; and, when installed as part of a heated slab floor, meet the requirements of § 110.8(g).
§ 150.0(g)1:	**Vapor Retarder.** In climate zones 1 through 16, the earth floor of unvented crawl space must be covered with a Class I or Class II vapor retarder. This requirement also applies to controlled ventilation crawl space for buildings complying with the exception to § 150.0(d).
§ 150.0(g)2:	**Vapor Retarder.** In climate zones 14 and 16, a Class I or Class II vapor retarder must be installed on the conditioned space side of all insulation in all exterior walls, vented attics, and unvented attics with air-permeable insulation.
§ 150.0(q):	**Fenestration Products.** Fenestration, including skylights, separating conditioned space from unconditioned space or outdoors must have a maximum U-factor of 0.58; or the weighted average U-factor of all fenestration must not exceed 0.58.*
Fireplaces, Decorative Gas Appliances, and Gas Log Measures:	
§ 110.5(e)	**Pilot Light.** Continuously burning pilot lights are not allowed for indoor and outdoor fireplaces.
§ 150.0(e)1:	**Closable Doors.** Masonry or factory-built fireplaces must have a closable metal or glass door covering the entire opening of the firebox.
§ 150.0(e)2:	**Combustion Intake.** Masonry or factory-built fireplaces must have a combustion outside air intake, which is at least six square inches in area and is equipped with a readily accessible, operable, and tight-fitting damper or combustion-air control device.*
§ 150.0(e)3:	**Flue Damper.** Masonry or factory-built fireplaces must have a flue damper with a readily accessible control.*
Space Conditioning, Water Heating, and Plumbing System Measures:	
§ 110.0-§ 110.3:	**Certification.** Heating, ventilation and air conditioning (HVAC) equipment, water heaters, showerheads, faucets, and all other regulated appliances must be certified by the manufacturer to the California Energy Commission.*
§ 110.2(a):	**HVAC Efficiency.** Equipment must meet the applicable efficiency requirements in Table 110.2-A through Table 110.2-K.*
§ 110.2(b):	**Controls for Heat Pumps with Supplementary Electric Resistance Heaters.** Heat pumps with supplementary electric resistance heaters must have controls that prevent supplementary heater operation when the heating load can be met by the heat pump alone; and in which the cut-on temperature for compression heating is higher than the cut-on temperature for supplementary heating, and the cut-off temperature for compression heating is higher than the cut-off temperature for supplementary heating.*
§ 110.2(c):	**Thermostats.** All heating or cooling systems not controlled by a central energy management control system (EMCS) must have a setback thermostat.*
§ 110.3(c)4:	**Water Heating Recirculation Loops Serving Multiple Dwelling Units.** Water heating recirculation loops serving multiple dwelling units must meet the air release valve, backflow prevention, pump priming, pump isolation valve, and recirculation loop connection requirements of § 110.3(c)4.
§ 110.3(c)6:	**Isolation Valves.** Instantaneous water heaters with an input rating greater than 6.8 kBtu per hour (2 kW) must have isolation valves with hose bibbs or other fittings on both cold and hot water lines to allow for flushing the water heater when the valves are closed.
§ 110.5:	**Pilot Lights.** Continuously burning pilot lights are prohibited for natural gas: fan-type central furnaces; household cooking appliances (except appliances without an electrical supply voltage connection with pilot lights that consume less than 150 Btu per hour); and pool and spa heaters.*
§ 150.0(h)1:	**Building Cooling and Heating Loads.** Heating and/or cooling loads are calculated in accordance with the ASHRAE Handbook, Equipment Volume, Applications Volume, and Fundamentals Volume; the SMACNA Residential Comfort System Installation Standards Manual; or the ACCA Manual J using design conditions specified in § 150.0(h)2.

2019 Low-Rise Residential Mandatory Measures Summary

§ 150.0(h)3A:	**Clearances.** Air conditioner and heat pump outdoor condensing units must have a clearance of at least five feet from the outlet of any dryer
§ 150.0(h)3B:	**Liquid Line Drier.** Air conditioners and heat pump systems must be equipped with liquid line filter driers if required, as specified by the manufacturer's instructions.
§ 150.0(j)1:	**Storage Tank Insulation.** Unfired hot water tanks, such as storage tanks and backup storage tanks for solar water-heating systems, must have a minimum of R-12 external insulation or R-16 internal insulation where the internal insulation R-value is indicated on the exterior of the tank.
§ 150.0(j)2A:	**Water Piping, Solar Water-heating System Piping, and Space Conditioning System Line Insulation.** All domestic hot water piping must be insulated as specified in Section 609.11 of the California Plumbing Code. In addition, the following piping conditions must have a minimum insulation wall thickness of one inch or a minimum insulation R-value of 7.7: the first five feet of cold water pipes from the storage tank; all hot water piping with a nominal diameter equal to or greater than 3/4 inch and less than one inch; all hot water piping with a nominal diameter less than 3/4 inch that is: associated with a domestic hot water recirculation system, from the heating source to storage tank or between tanks, buried below grade, and from the heating source to kitchen fixtures.*
§ 150.0(j)3:	**Insulation Protection.** Piping insulation must be protected from damage, including that due to sunlight, moisture, equipment maintenance, and wind as required by Section 120.3(b). Insulation exposed to weather must be water retardant and protected from UV light (no adhesive tapes). Insulation covering chilled water piping and refrigerant suction piping located outside the conditioned space must include, or be protected by, a Class I or Class II vapor retarder. Pipe insulation buried below grade must be installed in a waterproof and non-crushable casing or sleeve.
§ 150.0(n)1:	**Gas or Propane Water Heating Systems.** Systems using gas or propane water heaters to serve individual dwelling units must include all of the following: A dedicated 125 volt, 20 amp electrical receptacle connected to the electric panel with a 120/240 volt 3 conductor, 10 AWG copper branch circuit, within three feet of the water heater without obstruction. Both ends of the unused conductor must be labeled with the word "spare" and be electrically isolated. Have a reserved single pole circuit breaker space in the electrical panel adjacent to the circuit breaker for the branch circuit and labeled with the words "Future 240V Use"; a Category III or IV vent, or a Type B vent with straight pipe between the outside termination and the space where the water heater is installed; a condensate drain that is no more than two inches higher than the base of the water heater, and allows natural draining without pump assistance; and a gas supply line with a capacity of at least 200,000 Btu per hour.
§ 150.0(n)2:	**Recirculating Loops.** Recirculating loops serving multiple dwelling units must meet the requirements of § 110.3(c)5.
§ 150.0(n)3:	**Solar Water-heating Systems.** Solar water-heating systems and collectors must be certified and rated by the Solar Rating and Certification Corporation (SRCC), the International Association of Plumbing and Mechanical Officials, Research and Testing (IAPMO R&T), or by a listing agency that is approved by the Executive Director.
Ducts and Fans Measures:	
§ 110.8(d)3:	**Ducts.** Insulation installed on an existing space-conditioning duct must comply with § 604.0 of the California Mechanical Code (CMC). If a contractor installs the insulation, the contractor must certify to the customer, in writing, that the insulation meets this requirement.
§ 150.0(m)1:	**CMC Compliance.** All air-distribution system ducts and plenums must meet the requirements of the CMC §§ 601.0, 602.0, 603.0, 604.0, 605.0 and ANSI/SMACNA-006-2006 HVAC Duct Construction Standards Metal and Flexible 3rd Edition. Portions of supply-air and return-air ducts and plenums must be insulated to a minimum installed level of R-6.0 or a minimum installed level of R-4.2 when ducts are entirely in conditioned space as confirmed through field verification and diagnostic testing (RA3.1.4.3.8). Portions of the duct system completely exposed and surrounded by directly conditioned space are not required to be insulated. Connections of metal ducts and inner core of flexible ducts must be mechanically fastened. Openings must be sealed with mastic, tape, or other duct-closure system that meets the applicable requirements of UL 181, UL 181A, or UL 181B or aerosol sealant that meets the requirements of UL 723. If mastic or tape is used to seal openings greater than ¼ inch, the combination of mastic and either mesh or tape must be used. Building cavities, support platforms for air handlers, and plenums designed or constructed with materials other than sealed sheet metal, duct board or flexible duct must not be used to convey conditioned air. Building cavities and support platforms may contain ducts. Ducts installed in cavities and support platforms must not be compressed to cause reductions in the cross-sectional area.*
§ 150.0(m)2:	**Factory-Fabricated Duct Systems.** Factory-fabricated duct systems must comply with applicable requirements for duct construction, connections, and closures; joints and seams of duct systems and their components must not be sealed with cloth back rubber adhesive duct tapes unless such tape is used in combination with mastic and draw bands.
§ 150.0(m)3:	**Field-Fabricated Duct Systems.** Field-fabricated duct systems must comply with applicable requirements for: pressure-sensitive tapes, mastics, sealants, and other requirements specified for duct construction.
§ 150.0(m)7:	**Backdraft Damper.** Fan systems that exchange air between the conditioned space and outdoors must have backdraft or automatic dampers.
§ 150.0(m)8:	**Gravity Ventilation Dampers.** Gravity ventilating systems serving conditioned space must have either automatic or readily accessible, manually operated dampers in all openings to the outside, except combustion inlet and outlet air openings and elevator shaft vents.
§ 150.0(m)9:	**Protection of Insulation.** Insulation must be protected from damage, sunlight, moisture, equipment maintenance, and wind. Insulation exposed to weather must be suitable for outdoor service. For example, protected by aluminum, sheet metal, painted canvas, or plastic cover. Cellular foam insulation must be protected as above or painted with a coating that is water retardant and provides shielding from solar radiation.
§ 150.0(m)10:	**Porous Inner Core Flex Duct.** Porous inner core flex ducts must have a non-porous layer between the inner core and outer vapor barrier.
§ 150.0(m)11:	**Duct System Sealing and Leakage Test.** When space conditioning systems use forced air duct systems to supply conditioned air to an occupiable space, the ducts must be sealed and duct leakage tested, as confirmed through field verification and diagnostic testing, in accordance with § 150.0(m)11 and Reference Residential Appendix RA3.
§ 150.0(m)12:	**Air Filtration.** Space conditioning systems with ducts exceeding 10 feet and the supply side of ventilation systems must have MERV 13 or equivalent filters. Filters for space conditioning systems must have a two inch depth or can be one inch if sized per Equation 150.0-A. Pressure drops and labeling must meet the requirements in §150.0(m)12. Filters must be accessible for regular service.*
§ 150.0(m)13:	**Space Conditioning System Airflow Rate and Fan Efficacy.** Space conditioning systems that use ducts to supply cooling must have a hole for the placement of a static pressure probe, or a permanently installed static pressure probe in the supply plenum. Airflow must be ≥ 350 CFM per ton of nominal cooling capacity, and an air-handling unit fan efficacy ≤ 0.45 watts per CFM for gas furnace air handlers and ≤ 0.58 watts per CFM for all others. Small duct high velocity systems must provide an airflow ≥ 250 CFM per ton of nominal cooling capacity, and an air-handling unit fan efficacy ≤ 0.62 watts per CFM. Field verification testing is required in accordance with Reference Residential Appendix RA3.3.*

Carstairs Energy Inc.
2238 Bayview Heights Drive, Suite E
Los Osos, CA 93402
805-904-9048 title24@yahoo.com
www.carstairsenergy.com

Kenny Lane Addition

CABEC
California Association of Building Energy Consultants
CERTIFIED ENERGY ANALYST
Timothy Carstairs
Call Us for HERS Testing
Serving San Luis Obispo and Santa Barbara Counties

T24.2 - ENERGY REPORT CF1R-PRF-01 &RMS

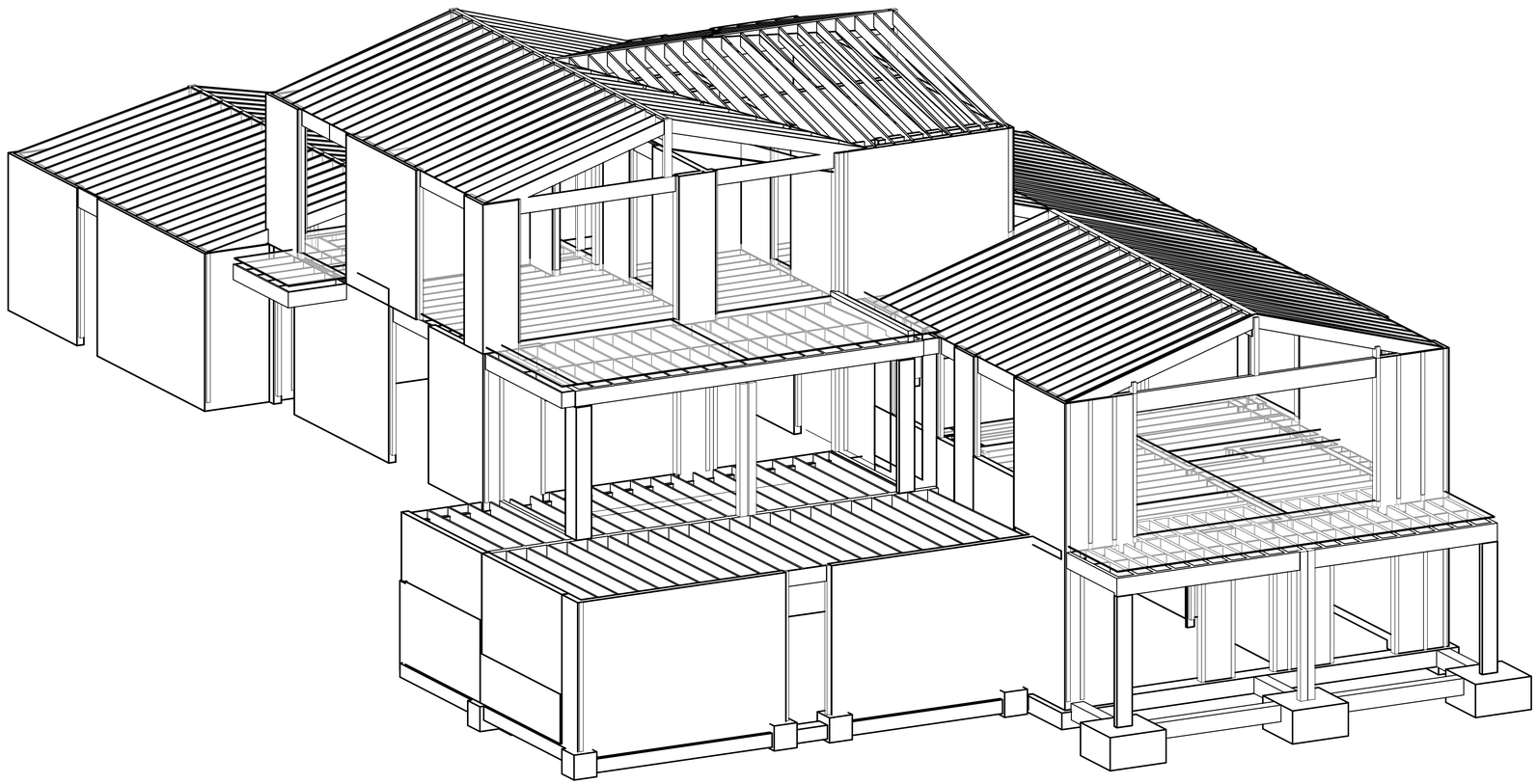

2
S001
3D MODEL SKETCH OF THE STRUCTURE

PROJECT: KENNY LN RESIDENCE LEGALIZATION
ISSUE: FOR PERMIT

DRAWING LIST

Sheet Number	SHEET NAME
S001	COVER&DRAWINGLIST
S002	GENERAL NOTES
S003	GENERAL NOTES
S200	STRUCTURAL PLAN VIEWS AND ELEVATIONS
S201	STRUCTURAL PLAN VIEWS AND ELEVATIONS
S202	STRUCTURAL PLAN VIEWS AND ELEVATIONS
S203	STRUCTURAL PLAN VIEWS AND ELEVATIONS
S400	STRUCTURAL TYPICAL REINFORCEMENT DETAILS
S401	FOUNDATION DETAILS
S402	FOUNDATION DETAILS
S601	LIGHT-FRAMING DETAILS
S602	LIGHT-FRAMING DETAILS
S603	LIGHT-FRAMING DETAILS
S604	LIGHT-FRAMING DETAILS
WSWH1	STRONG WALL DETAILS
WSWH2	STRONG WALL DETAILS
WSWH4	STRONG WALL DETAILS

Grand total: 17

FOR PERMIT

08/01/2022
FOR PERMIT

TANGObuilder
2261 Market Street #4004
San Francisco CA, 94114
www.tangobuilder.com

REGISTERED PROFESSIONAL ENGINEER
SAN AUGUSTA ALEMAN FERNANDEZ
C 86746
EXP. 03/31/2023
STATE OF CALIFORNIA

REV#	DATE	DESCRIPTION

10315 KENNY LN

CALIFORNIA

COVER&DRAWINGLIST

PROJECT NUMBER:

S001

8/1/2022 4:10:21 PM

CODES AND STANDARDS

1. WHERE CODES AND STANDARDS ARE REFERENCED IN THE CONTRACT DOCUMENTS, THEY SHALL BE THE VERSIONS LISTED IN CHAPTER 35 OF 2019 CALIFORNIA BUILDING CODE (CBC).
2. ALL WORK SHALL CONFORM TO THE REQUIREMENTS OF THE 2019 CALIFORNIA BUILDING STANDARDS CODE (CBSC) CALIFORNIA CODE OF REGULATIONS TITLE 24, INCLUDING PART 2, VOLUME 2, "A" CHAPTERS.
3. IN ADDITION, THE FOLLOWING CODES, STANDARDS AND SPECIFICATIONS SHALL APPLY WHERE MORE STRINGENT AND AS MODIFIED BY THE BUILDING CODE:
   - A. ACI 318-14: BUILDING CODE REQUIREMENTS FOR STRUCTURAL CONCRETE AND COMMENTARY.
   - B. AISC: STEEL CONSTRUCTION MANUAL, 15TH EDITION.
   - C. AISC 303-16: CODE OF STANDARD PRACTICE FOR STRUCTURAL STEEL BUILDINGS AND BRIDGES.
   - D. ANSI/AISC 341-16: SEISMIC PROVISIONS FOR STRUCTURAL STEEL BUILDINGS.
   - F. ANSI/AISC 360-16: SPECIFICATIONS FOR STRUCTURAL STEEL BUILDINGS.
   - G. ASCE 7-16: MINIMUM DESIGN LOADS FOR BUILDINGS AND OTHER STRUCTURES.
   - H. AWS D1.1/D1.1M:2015: STRUCTURAL WELDING CODE-STEEL.
   - I. AWS D1.3/D1.3M:2008: STRUCTURAL WELDING CODE - SHEET STEEL.
   - J. AWS D1.4/D1.4M:2011: STRUCTURAL WELDING CODE - REINFORCING STEEL.
   - K. AWS D1.8/D1.8M:2016: STRUCTURAL WELDING CODE - SEISMIC SUPPLEMENT.
4. THE ASTM STANDARDS REFERRED TO IN THE DRAWINGS AND SPECIFICATIONS AND USED IN DESIGN ARE THOSE INCLUDED AS REFERENCED STANDARDS TO THE PROJECT GOVERNING CODE(S). WHERE AN ASTM STANDARD HAS SUBSEQUENTLY BEEN REVISED, CONSTRUCTION SHALL COMPLY WITH BOTH THE LATEST EDITION OF THAT STANDARD AND THE EDITION OF THAT STANDARD REFERENCED IN DESIGN. WHERE IT IS NOT POSSIBLE TO SATISFY THE REQUIREMENTS OF BOTH EDITIONS OF THE STANDARDS DUE TO A CONFLICT BETWEEN THEM, NOTIFY THE ARCHITECT AND ENGINEER BEFORE PROCEEDING.

GENERAL

1. ALL CONSTRUCTION SHALL BE IN ACCORDANCE WITH THE FOLLOWING:
   - A. PROJECT GOVERNING CODE(S) AND STANDARDS.
   - B. DRAWINGS.
2. THE STRUCTURAL DRAWINGS ARE INTENDED TO WORK WITH AND BE COMPLEMENTARY TO THE PROJECT SPECIFICATIONS. REFER TO THE SPECIFICATIONS FOR ADDITIONAL REQUIREMENTS.
3. IN THE EVENT THAT CERTAIN DETAILS OF THE CONSTRUCTION ARE NOT FULLY SHOWN OR NOTED ON DRAWINGS, THEIR CONSTRUCTION SHALL BE OF THE SAME TYPE AS FOR SIMILAR CONDITIONS THAT ARE SHOWN OR NOTED, SUBJECT TO THE STRUCTURAL ENGINEER'S APPROVAL. ALL DETAIL REFERENCES SHALL BE CONSIDERED "TYPICAL". THE INTENT OF TYPICAL DETAILS SHALL BE APPLIED TO SIMILAR CONDITIONS ELSEWHERE IN THE PROJECT.
4. THESE DRAWINGS SCHEMATICALLY INDICATE EXISTING AND NEW CONSTRUCTION, DUE TO THE NATURE OF THE WORK, ADJUSTMENTS WILL LIKELY BE REQUIRED IN THE FIELD TO MEET THE DESIGN OBJECTIVES. THESE DRAWINGS AND SPECIFICATIONS HAVE BEEN PREPARED EXCLUSIVELY FOR USE ON THIS PROJECT ONLY. THE DRAWINGS AND SPECIFICATIONS, OR PORTIONS THEREOF, SHALL NOT BE USED ON OTHER PROJECTS OR ADDITIONS TO THIS PROJECT EXCEPT BY AGREEMENT IN WRITING OF THE ENGINEER.
5. THE CONTRACTOR SHALL VERIFY ALL EXISTING CONDITIONS AND DIMENSIONS BEFORE COMMENCING WITH THE WORK AND NOTIFY THE ARCHITECT AND ENGINEER OF ANY DISCREPANCIES WITH THE INFORMATION SHOWN ON THE DRAWINGS.
6. THE CONTRACTOR SHALL USE STRUCTURAL DRAWINGS IN CONJUNCTION WITH ARCHITECTURAL, MECHANICAL, ELECTRICAL, PLUMBING, FIRE PROTECTION AND ALL OTHER RELEVANT CONSULTANT DRAWINGS.
7. SEE ARCHITECTURAL DRAWINGS FOR THE FOLLOWING:
   - A. SIZE AND LOCATION OF ALL DOOR AND WINDOW OPENINGS, EXCEPT AS NOTED.
   - B. SIZE AND LOCATION OF ALL INTERIOR AND EXTERIOR NON-BEARING PARTITIONS, FAÇADE, LOUVERS ETC., EXCEPT AS NOTED
   - C. SIZE AND LOCATION OF ALL CONCRETE CURBS, FLOOR DRAINS, SLOPES, DEPRESSED AREAS, CHANGE IN LEVEL, CHAMFERS, GROOVES, INSERTS, ETC., EXCEPT AS SHOWN.
   - D. SIZE AND LOCATION OF ALL FLOOR AND ROOF OPENINGS EXCEPT AS SHOWN.
   - E. FLOOR AND ROOF FINISHES.
   - F. EDGE OF SLAB LOCATIONS AROUND THE PERIMETER AND AT INTERIOR OPENINGS, EXCEPT AS SHOWN.
   - G. DIMENSIONS NOT SHOWN ON THE STRUCTURAL DRAWINGS.
   - H. STAIRS EXCEPT AS SHOWN.
   - I. FIREPROOFING.
   - J. WATERPROOFING.
   - K. MISCELLANEOUS STEEL REQUIRED FOR SUPPORT OF ARCHITECTURAL ELEMENTS.
8. SEE MECHANICAL, ELECTRICAL AND PLUMBING DRAWINGS FOR THE FOLLOWING:
   - A. PIPE RUNS, SLEEVES, HANGERS, TRENCHES EXCEPT AS SHOWN OR NOTED.
   - B. ELECTRICAL CONDUIT RUNS, BOXES, OUTLETS IN WALLS AND SLABS. CONDUITS SHALL NOT BE CAST IN CONCRETE MEMBERS UNLESS SPECIFICALLY INDICATED ON THE STRUCTURAL DRAWINGS. GROUNDING WIRES MAY BE DIRECTLY CAST WITHIN CONCRETE AS REQUIRED PER ELECTRICAL DRAWINGS.
   - C. CONCRETE INSERTS FOR ELECTRICAL, MECHANICAL, OR PLUMBING FIXTURES.
   - D. SIZE AND LOCATION OF EQUIPMENT PADS AND EQUIPMENT ANCHORAGE EXCEPT AS SHOWN OR NOTED.
   - E. ALL LIGHTNING PROTECTION AND/OR GROUND/EARTHING REQUIREMENTS INCLUDING ANY ASSOCIATED ITEMS EMBEDDED IN OR ATTACHED TO STRUCTURE.
   - F. VERIFY AND COORDINATE ALL OPENINGS, EQUIPMENT PADS, SLEEVES AND INSERTS WITH REVIEWED SUBMITTALS, AND NOTIFY THE STRUCTURAL ENGINEER USING HIGHLIGHTED DRAWINGS PRODUCED TO SCALE WHERE THESE DEVIATE IN SIZE OR LOCATION FROM THE STRUCTURAL DRAWINGS.
9. STRUCTURAL DRAWINGS AND SPECIFICATIONS FOR THIS WORK HAVE BEEN PREPARED IN ACCORDANCE WITH GENERALLY ACCEPTED ENGINEERING STANDARDS OF PRACTICE TO MEET THE MINIMUM REQUIREMENTS OF THE APPLICABLE EDITION OF THE CBC. ANY OMISSIONS OR DISCREPANCIES ON THE PLANS OR ANY DEVIATIONS FROM THE PLANS THAT ARE NECESSITATED BY FIELD CONDITIONS OR ANY CONDITION DIFFERENT FROM THOSE INDICATED ON THE PLANS SHOULD BE BROUGHT TO THE ATTENTION OF THE ENGINEER PRIOR TO CONTINUING CONSTRUCTION.
10. CONNECTIONS AND IMPLIED CONSTRUCTION ASSEMBLIES THAT ARE NOT SPECIFICALLY DESCRIBED OR DETAILED SHALL BE CONSTRUCTED USING STANDARD CONSTRUCTION PRACTICES IN COMPLIANCE WITH THE GOVERNING CODES AND LOCAL ORDINANCES.
11. ALL FRAMING HARDWARE SHALL BE MANUFACTURED BY SIMPSON STRONGTIE, OR EQUAL. ALTERNATE FRAMING HARDWARE MANUFACTURERS SHALL NOT BE PROVIDED UNLESS SPECIFICALLY AUTHORIZED BY THE ENGINEER AND THE BUILDING OWNER. IF ALTERNATE HARDWARE SYSTEMS ARE AUTHORIZED, THE CONTRACTOR SHALL FORWARD COMPLETE SHOP DRAWINGS FOR REVIEW AND APPROVAL.
12. THE INFORMATION SHOWN FOR NON-STRUCTURAL ELEMENTS/FINISHES IS GIVEN FOR REFERENCE ONLY, THE CONTRACTOR SHALL REFER TO ARCHITECTURAL DRAWINGS FOR THIS INFORMATION.
13. SCALES NOTED ON STRUCTURAL DRAWINGS ARE FOR REFERENCE ONLY. NO DIMENSIONAL INFORMATION SHALL BE OBTAINED BY SCALING FROM THE DRAWINGS. THE CONTRACTOR SHALL VERIFY DIMENSIONS NOT NOTED WITH THE ARCHITECT PRIOR TO PROCEEDING WITH WORK. WRITTEN INFORMATION AND DIMENSIONS SHALL TAKE PRECEDENCE OVER GRAPHIC INFORMATION.
14. THE STRUCTURAL SYSTEMS HAVE BEEN DESIGNED TO CARRY THE SUPERIMPOSED LIVE LOADS AS PRESCRIBED BY THE CALIFORNIA BUILDING CODE AND IN ACCORDANCE WITH STANDARD ENGINEERING PRACTICES, WITH NO SPECIAL PROVISIONS TO CARRY CONCENTRATED LOADS FROM STORAGE AND HANDLING OF CONSTRUCTION MATERIALS OR FROM OPERATION OF CONSTRUCTION EQUIPMENT.

DESIGN BASIS

1. DEAD LOADS: FLOOR= 18.0 PSF, CEILING = 7.0 PSF, ROOF = 11.0 PSF (INCLUDES WEIGHT OF FRAMING ELEMENTS)
2. LIVE LOADS: FLOOR = 40 PSF, CEILING = 10 PSF, ROOF = 20 PSF
3. INTERIOR WALLS: 10 PSF, EXTERIOR WALLS = 23 PSF
4. WIND LOADS:

PARAMETER	VALUE
BASIC WIND SPEED, V	91 MPH
WIND EXPOSURE CATEGORY	B
RISK CATEGORY	II
GUST FACTOR, G	0.85
DIRECTIONALITY FACTOR, Kd	0.85

5. SEISMIC LOADS:

PARAMETER	VALUE
SEISMIC IMPORTANCE FACTOR, Ie,	1.0
SITE CLASS	D-DEFAULT
SHORT PERIOD SITE COEFFICIENT, Fa	1.2
1 SEC PERIOD SITE COEFFICIENT, Fv	1.7
SHORT PERIOD SPECTRAL RESPONSE ACCELERATION, S_S	1.778 g
1 SEC PERIOD SPECTRAL RESPONSE ACCELERATION, S_1	0.676 g
S_{MS} (SITE SPECIFIC)	2.134 g
S_{M1} (SITE SPECIFIC)	1.149 g
S_{DS} (SITE SPECIFIC)	1.422 g
S_{D1} (SITE SPECIFIC)	0.766 g
RISK CATEGORY	II
SEISMIC DESIGN CATEGORY	D
SEISMIC FORCE-RESISTING SYSTEM	LIGHT-FRAME WOOD WALLS SHEATHED WITH WSP
RESPONSE MODIFICATION COEFFICIENT, Ri	6.5
SEISMIC RESPONSE COEFFICIENT, C_S	0.2188
DESIGN BASE SHEAR, V	37.2 KIPS
SYSTEM OVERSTRENGTH FACTOR, Ω_0	3
DEFLECTION AMPLIFICATION FACTOR, C_d	4
ANALYSIS PROCEDURE	ELF

TEMPORARY WORK

1. ALL TEMPORARY WORK SHALL BE DESIGNED, INSTALLED AND CARRIED OUT BY THE CONTRACTOR IN ACCORDANCE WITH THE REQUIREMENTS OF THE PROJECT GOVERNING CODE(S).
2. THE DRAWINGS INDICATE THE COMPLETED STRUCTURE. THE CONTRACTOR IS FULLY RESPONSIBLE FOR ALL TEMPORARY MEASURES, MEANS AND METHODS OF CONSTRUCTION, INCLUDING BUT NOT LIMITED TO SHORING AND TEMPORARY BRACING.
3. THE CONTRACTOR SHALL TAKE ALL NECESSARY MEASURE TO INSURE SAFETY OF ALL PERSONS AND STRUCTURES AT THE SITE AND ADJACENT TO THE SITE. OBSERVATION VISITS TO THE SITE BY THE ARCHITECT, ENGINEER OR CONSTRUCTION MANAGER SHALL NOT RELIEVE THE CONTRACTOR OF SUCH RESPONSIBILITY.
4. THE CONTRACTOR IS RESPONSIBLE FOR AND SHALL MAINTAIN THE INTEGRITY OF ALL SCAFFOLDING, BRACING, AND SHORING SYSTEMS AS REQUIRED FOR INSTALLATION, STABILITY AND SAFETY OF NEW WORK AND EXISTING STRUCTURES, PIPING, AND FOUNDATION SYSTEMS. CONTRACTOR SHALL ALSO PROVIDE FOR THE SAFETY OF PEDESTRIANS AND JOB SITE PERSONNEL. AT ALL TIMES, THE CONTRACTOR SHALL BE SOLELY AND COMPLETELYRESPONSIBLE FOR THE CONDITION OF THE JOB SITE, INCLUDING SAFETY OF PERSONS AND PROPERTY. THE CONTRACTOR SHALL PROTECT NEW AND EXISTING CONSTRUCTION FROM INCLEMENT WEATHER AND PHYSICAL DAMAGE.

TESTS AND STRUCTURAL OBSERVATIONS

1. CONTRACTOR SHALL COORDINATE WITH THE CITY TO ENSURE ALL INSPECTIONS (INCLUDING SPECIAL INSPECTIONS) ARE COMPLETED PER THE LOCAL BUILDING DEPARTMENT REQUIREMENTS. APPROVALS BY BUILDING INSPECTORS SHALL NOT CONSTITUTE AUTHORITY TO DEVIATE FROM THE PLANS AND SPECIFICATIONS.
2. IN ADDITION TO OBSERVATIONS BY THE SOILS ENGINEER(IF APPLICABLE), AND CITY INSPECTOR, OBSERVATION OF THE CONSTRUCTION BY THE PROJECT ENGINEER IS RECOMMENDED FOR THIS PROJECT. THE CONTRACTOR SHALL PHASE THE PROJECT AND COORDINATE WITH THE ENGINEER TO ENSURE THAT THE PRIMARY STRUCTURAL ELEMENTS OF THE CONSTRUCTION ARE OBSERVED PRIOR TO COVERING WITH FINISHES OR OTHER MATERIALS. AS A MINIMUM, OBSERVATION BY THE ENGINEER IS RECOMMENDED AS FOLLOWS:
   A. REINF. STEEL AND HARDWARE EMBEDDED IN THE FOUNDATION SHALL BE OBSERVED PRIOR TO CONCRETE PLACEMENT
   B. SHEARWALLS AND FRAMING ELEMENTS SHALL BE OBSERVED PRIOR TO INSTALLATION OF FINISHES.
3. IF PROVIDED, OBSERVATION OF THE CONSTRUCTION BY THE ENGINEER IS INTENDED TO IMPROVE THE PROBABILITY THAT THE WORK IS COMPLETED IN GENERAL CONFORMANCE WITH THE ENGINEERING INTENT OF THE DESIGN. THE PURPOSE OF TANGObuilder's VISITS WILL BE TO BECOME GENERALLY FAMILIAR WITH THE PROGRESS AND QUALITY OF THE CONTRACTOR'S WORK AND DETERMINE IF THE WORK IS PROGRESSING IN GENERAL CONFORMANCE WITH OUR DESIGN INTENT. DURING OUR VISITS,TANGObuilder WILL NOT BE MAKING DETAILED INSPECTIONS, OR VERIFYING DIMENSIONS. OBSERVATION OF THE CONSTRUCTION BY THE ENGINEER DOES NOT RELIEVE THE CONTRACTOR OF THE RESPONSIBILITY FOR COMPLETING THE CONSTRUCTION IN ACCORDANCE WITH THE APPROVED CONSTRUCTION DOCUMENTS, GENERALLY ACCEPTED STANDARDS OF PRACTICE, AND CITY/COUNTY REQUIRED INSPECTIONS.

GENERAL FRAMING NOTES

1. CUTTING OF STRUCTURAL ELEMENTS (STUDS, PLATES, ETC) IN SHEAR WALLS SHALL NOT BE PERMITTED UNLESS FIRST APPROVED BY THE ENGINEER.
2. NO STRUCTURAL MEMBER SHALL BE CUT OR NOTCHED UNLESS SPECIFICALLY SHOWN, NOTED, OR APPROVED BY THE ENGINEER. NOTCH DETAILS, IF PROVIDED, ARE FOR GENERAL GUIDANCE ONLY. THE ENGINEER SHALL BE CONTACTED TO APPROVE LOCATIONS OF PROPOSED NOTCHES.
3. SAWN LUMBER:
   - A. UNLESS NOTED OTHERWISE, ALL FRAMING LUMBER SHALL BE DOUGLAS FIR, AND SHALL BE STAMPED WITH A GRADE MARK WITH THE FOLLOWING GRADES. FRAMING LUMBER SHALL CONFORM TO GRADING RULES OF WWPA AND COMPLIES WITH DOC PS 20. MAXIMUM MOISTURE CONTENT SHALL NOT EXCEED 19% AT THE TIME OF CONSTRUCTION.

FRAMING MATERIAL	GRADE
RAFTERS (2x DIMENSIONAL)	NO.2 GRADE MIN
BUILT UP HEADERS (2-2x)	NO.2 GRADE MIN
4x POSTS/BEAMS/RAFTERS	NO.2 GRADE MIN
6x POSTS/BEAMS/RAFTERS	NO.1 GRADE MIN
SOLE PLATES (2x MIN.)	STUD GRADE, MINIMUM
MUDSILLS (2x MIN.)	P.T. DF. STD & BETTER
TOP PLATES (2x MIN.)	NO.2 GRADE MIN
RIM JOIST (2x DIMENSIONAL)	NO.2 GRADE MIN
FLR JOISTS (2x DIMENSIONAL)	NO.2 GRADE MIN
STRUCTURAL PLYWOOD	APA RATED SHTG
LUMBER EXPOSED TO WEATHER	P.T. D.F. NO.2 GRADE MIN
TYPICAL WALL STUDS	PER NOTE 4 BELOW

4. STRUCTURAL STUD WALLS:
   - A. USE SINGLE BOTTOM PLATE AND DOUBLE TOP PLATE U.N.O. STAGGER JOINTS IN UPPER AND LOWER MEMBERS OF TOP PLATES NOT LESS THAN 4'-0". STUD HEIGHTS EXCEEDING 10'-1" SHALL BE BRACED MID-HEIGHT USING FULL DEPTH 2x BLOCKING. ALL EXTERIOR STUD WALLS SHOWN ON STRUCTURAL DRAWINGS SHALL BE FRAMED AS FOLLOWS (U.O.N.):

MAX. TOP. PLATE	STUD TYPE
12'-1"	(2)-2x4 DOUG-FIR NO. 1
	2x6 STUD GRADE
10'-1"	2x4 DOUG-FIR NO.1
	2x6 STUD GRADE
8'-1"	2x4 DOUG-FIR NO.2
	2x6 STUD GRADE
INTERIOR WALLS UP TO 12'-1"	2x4 STUD GRADE
	2x6 STUD GRADE

   - B. TOP PLATES SHALL BE DOUBLED ON ALL STUD WALLS. LAP 4'-0" MINIMUM AT TOP PLATE SPLICES, WITH (12) 16d NAILS EACH SIDE OF SPLICE, U.N.O. SPLICES IN UPPER AND LOWER PLATES SHALL BE STAGGERED 4'-0" MINIMUM.
   - C. POSTS IN WALLS MAY BE MADE WITH MULTIPLE STUDS OF EQUIVALENT WIDTH AND DEPTH, U.O.N. SECURE MULTIPLE STUDS WITH 16d NAILS AT 8" O.C. STAGGERED. POST INSIDE WALL SHALL BE CONNECTED WITH (2)-A35 ANCHORS
   - D. PROVIDE KING STUDS AT THE ENDS OF ALL HEADERS OR OTHER BEAMS INSTALLED IN WALLS. ADJACENT, STACKING WINDOWS SHALL BE SEPARATED BY KING STUDS THAT ARE CONTINUOUS FROM SILL TO TOP PLATE, CRIPPLE STUDS UNDER HEADERS SHALL BE CONTINUOUS TO SILL PLATE. END NAIL KING STUDS TO HEADERS.
   - F. ALL MEMBERS IN BEARING SHALL BE ACCURATELY CUT AND ALIGNED SO THAT FULL BEARING IS PROVIDED WITHOUT THE USE OF SHIMS.
   - G. BLOCK ALL STUD WALLS AS REQUIRED FOR SHEATHING AND FINISHES. BALLOON FRAME ALL WALLS WITH SLOPING CEILING OR WITH RAISED CEILINGS.
5. JOISTS:
   - A. INSTALL HORIZONTAL MEMBERS WITH CROWN UP. WHERE KNOTS EXIST NEAR THE TOP OR BOTTOM OF HORIZONTAL MEMBERS, INSTALL MEMBER WITH KNOTS UP. CANTILEVERED DECK JOISTS SHALL BE CAREFULLY NOTCHED AND TRIMMED (IF NECESSARY) TO PROVIDE SLOPE WITHOUT OVER-CUTTING.
   - B. PROVIDE FULL DEPTH BLOCKING OR CONTINUOUS RIM JOIST AT ALL FLOOR AND ROOF FRAMING SUPPORTS. FRAMING MEMBERS SHALL HAVE A MINIMUM OF 2" BEARING AT SUPPORTS. LAPPING JOISTS SHALL HAVE 6" MINIMUM OVERLAP CENTERED OVER INTERIOR SUPPORTS.
6. BOLTS, SCREWS AND NAILS:
   - A. ALL BOLTED WOOD CONNECTIONS SHALL HAVE A WASHER UNLESS A STEEL PLATE IS SPECIFIED. HOLES SHALL BE PROPERLY ALIGNED. OVERSIZED HOLES ARE NOT ALLOWED. NUTS SHALL BE SNUG TIGHTENED. BOLT HOLES SHALL BE NOMINAL DIAMETER OF BOLT PLUS 1/16". THREADS SHALL NOT BEAR ON WOOD OR STEEL.
   - B. NAILED WOOD CONNECTIONS SHALL USE COMMON WIRE NAILS, U.N.O. MIN. NAILING REQUIREMENTS FOR STANDARD CONNECTIONS SHALL BE IN ACCORDANCE WITH THE GOVERNING C.B.C. FASTENING SCHEDULE (TABLE 2304.10.1).
   - C. ALL MANUFACTURED CONNECTION HARDWARE SHALL BE AS DESIGNATED ON DRAWINGS AND INSTALLED (WITH ALL NAIL HOLES FILLED) IN ACCORDANCE WITH MANUFACTURER'S INSTRUCTIONS AND APPLICABLE ICC APPROVALS.
   - D. INSTALL LAG SCREWS IN DRILLED LEAD HOLES WITH A DIA. EQUAL TO 3/4" OF THE SHANK DIAMETER. LAG SCREWS SHALL NOT BE HAMMERED IN. PROVIDE WASHERS UNDER HEADS BEARING ON WOOD. HOLES SHALL BE PROPERLY ALIGNED.
7. WOOD PRESERVATIVE:
   - A. ALL WOOD FRAMING IN CONTACT WITH CONCRETE AND/OR EXPOSED TO WEATHER OR PROLONGED DAMPNESS SHALL BE TREATED WITH "CELLOW" AT THE RATE OF 0.23 POUNDS PER CUBIC FOOT IN ACCORDANCE WITH AWPA SPECIFICATIONS, OR SHALL BE WOOD OF NATURAL RESISTANCE TO DECAY.
   - B. ALL STEEL CONNECTORS IN CONTACT WITH PRESSURE TREATED WOOD SHALL BE HOT-DIPPED GALVANIZED OR STAINLESS STEEL AS PER SECTION 2304.10.5. 1 OF 2019 CBC.
8. EPOXIED ANCHORS:
   - A. WHERE EPOXIED ANCHORS (REINFORCING BARS OR ALL-THREADED RODS) ARE CALLED FOR IN THE STRUCTURAL DRAWINGS, THE EPOXY USED SHALL BE SIMPSON AT-XP (ESR-2508). SUBMIT MANUFACTURERS LITERATURE FOR SUBSTITUTE SYSTEM TO ENGINEER FOR REVIEW AND APPROVAL.
   - B. PREMEASURE EPOXIES IN DISPOSABLE, TWO-PART CARTRIDGES DISPENSED THROUGH PROPIETARY MIXING NOZZLES ARE ACCEPTABLE. POLYESTER RESINS SHALL NOT BE SUBSTITUTED FOR EPOXY, INSTALL DOWELS IN EXISTING CONCRETE OR BRICK PER MANUFACTURER'S RECOMMENDATIONS.
9. "PARALLAM" BEAMS:
   - A. AS MANUFACTURED BY WEYERHAEUSER COMPANY
10. SHEATHING:
   - A. U.O.N, USE DOUGLAS FIR OR OSB APA EXTERIOR, EXPOSURE1, RATED SHEATHING IN CONFORMANCE WITH THE U.S COMMERCIAL STANDARDS PS-1, INSTALL WITH FACE GRAIN PERPENDICULAR TO JOISTS.
   - B. ROOF SHEATHING SHALL BE 15/32" WITH A SPAN RATING OF 24/0, UNBLOCKED, w/ 8d COMMON NAILS OR 16d SINKER NAILS @ 6" O.C. EDGE & BOUNDARY NAILING AND 10d COMMON NAILS OR 16d SINKER NAILS @ 12@ O.C FIELD NAILING. INSTALL WITH FACE GRAIN PERPENDICULAR TO RAFTERS.
   - C. FLOOR SHEATHING SHALL BE 3/4" APA RATED STURD-L-FLOOR MIN, 3/4" T&G WITH MIN. SPAN RATING 24, UNBLOCKED (U.N.O) PROVIDE 10d COMMON NAILS OR 16d SINKER NAILS @ 6" O.C EDGE NAILING, 10d COMMON NAILS OR 16d SINKER NAILS @ 4" O.C BOUNDARY NAILING, AND 10d COMMON NAILS OR 16d SINKER NAILS @ 10" O.C FIELD NAILING. GLUE TO FLOOR JOISTS. INSTALL WITH FACE GRAIN PERPENDICULAR TO JOISTS.
   - D. FLOOR AND ROOF SHEATHING PANELS SHALL NOT BE LESS THAN 24" INCHES WIDE, UNLESS ALL EDGES ARE SOLIDLY BLOCKED.
   - E. FLOOR AND ROOF SHEATHING SHALL BE INSTALLED WITH THE FACE GRAIN PERPENDICULAR TO FRAMING MEMBERS BELOW, STAGGER THE ADJACENT PANELS BY 4 FEET.
   - F. THE SHEATHING PANELS SHALL BE INSTALLED SUCH THAT THERE IS AN 1/8" GAP BETWEEN PANEL EDGES TO ALLOW FOR POSSIBLE SWELLING AND/ OR EXPANSION.

CONCRETE

1. ALL CONCRETE SHALL HAVE:
   - A. AN ULTIMATE COMPRESSIVE STRENGTH (F'C) OF 2,500 PSI AT 28 DAYS (UNO).
   - B. A MAXIMUM SLUMP OF 5" AT POINT OF PLACEMENT.
   - C. A W/C RATIO OF 0.55 OR LESS FOR ALL SLABS, WALLS, AND COLUMNS, AND 0.60 OR LESS FOR ALL FOUNDATIONS.
   - D. A NORMAL DRY-WEIGHT DENSITY (UNO).
   - E.
2. AS A MINIMUM, SPECIAL INSPECTION IS ALWAYS REQUIRED ON:
   - A. STRUCTURAL SLABS, FLAT PLATES
   - B. WALLS, COLUMNS, BEAMS
   - C. PILES, CAISSONS
   - D. WELDING OF REINFORCEMENT, INSTALLATION OF MECHANICAL BAR SPLICE DEVICES, EPOXY APPLICATION

   WHEN REQUIRED OR SPECIFIED, SPECIAL INSPECTION SERVICES SHALL CONFORM TO THE GOVERNING BUILDING CODE, CHAPTER 17 AND SHALL BE PROVIDED BY AN ICC CERTIFIED INSPECTOR OR BUILDING DEPARTMENT APPROVED ENGINEER. THE BUILDING DEPARTMENT RESERVES THE RIGHT TO WAIVE OR REQUIRE THE SPECIAL INSPECTION REQUIREMENTS [SECTION 1704.1 AND 1704.4] . NOTHING IN THESE PLANS WAIVES THE BUILDING DEPARTMENT'S RIGHT TO REQUIRE SPECIAL INSPECTION AT ANY POINT AND ON ANY MATERIAL.
3. TESTING OF MATERIALS USED IN CONCRETE CONSTRUCTION MUST BE PERFORMED AS NOTED ON STRUCTURAL PLANS OR AT THE REQUEST OF THE BUILDING DEPARTMENT TO DETERMINE IF MATERIALS ARE QUALITY SPECIFIED. TESTS OF MATERIALS AND OF CONCRETE SHALL BE MADE BY AN APPROVED AGENCY AND AT THE EXPENSE OF THE CONTRACTOR; SUCH TESTS SHALL BE MADE IN ACCORDANCE WITH THE STANDARDS LISTED IN THE GOVERNING BUILDING CODE, TABLE 1704.4. WHEN TESTING OF CONCRETE IS REQUIRED, FOUR (4) TEST CYLINDERS SHALL BE TAKEN FROM EACH 150 YARDS, OR FRACTION THEREOF, POURED IN ANY ONE DAY. ONE (1) CYLINDER SHALL BE TESTED AT SEVEN (7) DAYS; TWO (2) AT 28 DAYS; ONE (1) SHALL BE HELD IN RESERVE. IF CONTRACTOR ELECTS TO HAVE ADDITIONAL TESTS PERFORMED FOR "EARLY-BREAK" RESULTS, ADDITIONAL TEST CYLINDERS MUST BE TAKEN. AT NO TIME SHALL THE CONTRACTOR INSTRUCT THE TESTING AGENCY TO PERFORM TESTS ON A SCHEDULE DIFFERENT THAN ABOVE WITHOUT THE PRIOR AUTHORIZATION OF THE ENGINEER. CONTRACTOR IS RESPONSIBLE FOR COMPLYING WITH APPLICABLE TESTING REQUIREMENTS OF THEBUILDING DEPARTMENT. COPIES OF ALL TEST REPORTS SHALL BE PROVIDED TO ENGINEER AND BUILDING DEPARTMENT FOR REVIEW IN A TIMELY MANNER.
4. THE CONTRACTOR SHALL REMOVE AND REPLACE ANY CONCRETE WHICH FAILS TO ATTAIN SPECIFIED 28 DAY COMPRESSIVE STRENGTH IF SO DIRECTED BY THE ENGINEER. ANY DEFECTS IN THE HARDENED CONCRETE SHALL BE REPAIRED TO THE SATISFACTION OF THE ENGINEER AND/OR ARCHITECT OR THE HARDENED CONCRETE SHALL BE REPLACED AT THE CONTRACTOR'S EXPENSE.
5. ALL CONCRETE WORK SHALL CONFORM WITH THE GOVERNING BUILDING CODE, CHAPTER 19.
6. ALL CEMENT SHALL BE PORTLAND CEMENT TYPE I OR II AND SHALL CONFORM TO ASTM C 150.
7. ALL AGGREGATES SHALL CONFORM TO ASTM C33. MAXIMUM AGGREGATE SIZES:
   - A. FOOTINGS: 1-1/2"
   - B. ALL OTHER WORK: 3/4"
8. ALL CONSTRUCTION JOINTS SHALL BE CONSTRUCTED IN ACCORDANCE WITH THE TYPICAL CONSTRUCTION JOINT DETAILS SHOWN ON THE STRUCTURAL AND ARCHITECTURAL DRAWINGS.
9. CLEAN AND ROUGHEN TO 1/4" AMPLITUDE ALL CONCRETE CONSTRUCTION JOINT SURFACES AGAINST WHICH CONCRETE IS TO BE PLACED. ALL CONSTRUCTION JOINTS SHALL BE WETTED AND STANDING WATER SHALL BE REMOVED IMMEDIATELY BEFORE NEW CONCRETE IS PLACED. PROVIDE CLASS "B" SPLICE AT ALL REINFORCEMENT CROSSING CONSTRUCTION JOINTS, TYPICAL UNLESS NOTED OTHERWISE.
10. PROVIDE SLEEVES FOR PLUMBING AND ELECTRICAL OPENINGS IN CONCRETE WALLS/SLABS BEFORE PLACING CONCRETE. DO NOT CUT ANY REINFORCING WHICH MAY CONFLICT. PIPES AND/OR CONDUITS SHALL NOT PASS THROUGH COLUMNS AND BEAMS UNLESS SPECIFICALLY DETAILED ON THE STRUCTURAL DRAWINGS.
11. CORING OF CONCRETE AFTER PLACEMENT IS NOT PERMITTED
12. CLEAR COVER OF CONCRETE OVER OUTER REINFORCING BARS SHALL BE AS FOLLOWS. ALL REINFORCEMENT INCLUDING WWF SHALL BE CHAIRED UP.

LOCATION IN STRUCTURE	FACES	CLEAR COVER
PERMANENTLY EXPOSED TO EARTH OR WEATHER	CAST AGAINST EARTH	3 "
	CAST AGAINST FORMS	2"
NOT EXPOSED TO EARTH OR WEATHER	SLABS, WALLS, JOISTS	3/4"
	BEAMS, GIRDERS, COLUMNS	1-1/2 "

13. THE ARCHITECT, ENGINEER AND APPROPRIATE INSPECTORS SHALL BE NOTIFIED IN A TIMELY MANNER FOR A REINFORCEMENT INSPECTION PRIOR TO THE PLACEMENT OF ANY CONCRETE.
14. THE CONTRACTOR SHALL OBTAIN APPROVAL FROM THE ARCHITECT AND THE ENGINEER PRIOR TO PLACING SLEEVES, PIPES, DUCTS, CHASES, CORING AND OPENING ON OR THROUGH STRUCTURAL CONCRETE BEAMS, WALLS, FLOORS, AND ROOF SLABS UNLESS SPECIFICALLY DETAILED OR NOTED ON THE PLANS. ALL PILES OR CONDUITS PASSING THROUGH CONCRETE MEMBERS SHALL BE SLEEVED WITH STANDARD STEEL PIPE SECTIONS.
15. THE CONTRACTOR IS RESPONSIBLE FOR DESIGN, INSTALLATION, MAINTENANCE AND REMOVAL OF ALL FORMWORK. FORMS SHALL BE PROPERLY CONSTRUCTED, SUFFICIENTLY TIGHT TO PREVENT LEAKAGE, SUFFICIENTLY STRONG, AND BRACED TO MAINTAIN THEIR SHAPE AND ALIGNMENT UNTIL NO LONGER NEEDED FOR CONCRETE SUPPORT. JOINTS IN FORMWORK SHALL BE TIGHTLY FITTED AND BLOCKED, AND SHALL PRODUCE A FINISHED CONCRETE SURFACE THAT IS TRUE AND FREE FROM BLEMISHES. FORMS FOR EXPOSED CONCRETE SHALL BE PRE-APPROVED BY THE ARCHITECT TO ENSURE CONFORMANCE WITH DESIGN INTENT.
16. REMOVE FORM WORK IN ACCORDANCE WITH THE FOLLOWING SCHEDULE:
   - A. FORMS AT SLAB EDGE: 1 DAY
   - B. SIDE FORMS AT FOOTINGS: 2 DAYS
   - C. ALL OTHER VERTICAL SURFACES: 7 DAYS
   - D. BEAMS, COLUMNS, GIRDERS: 15 DAYS
   - E. ELEVATED SLABS: 28 DAYS

   ENGINEER RESERVES THE RIGHT TO MODIFY REMOVAL SCHEDULE ABOVE BASED ON FIELD OBSERVATIONS, CONCRETE CONDITIONS, AND/OR CONCRETE TEST RESULTS.
17. ALL CONCRETE (EXCEPT SLABS-ON-GRADE 6" OR LESS) SHALL BE MECHANICALLY VIBRATED AS IT IS PLACED. VIBRATOR TO BE OPERATED BY EXPERIENCED PERSONNEL. THE VIBRATOR SHALL BE USED TO CONSOLIDATE THE CONCRETE. THE VIBRATOR SHALL NOT BE USED TO CONVEY CONCRETE, NOR SHALL IT BE PLACED ON REINFORCING AND/OR FORMS.
18. CONCRETE SHALL BE MAINTAINED IN A MOIST CONDITION FOR A MIN. OF FIVE (5) DAYS AFTER PLACEMENT.
19. CONCRETE SHALL NOT BE PERMITTED TO FREE FALL MORE THAN SIX (6) FEET. FOR HEIGHTS GREATER THAN SIX (6) FEET, USE TREMIE, PUMP OR OTHER METHOD CONSISTENT WITH APPLICABLE STANDARDS.
20. WHEN SPECIFIED ULTIMATE COMPRESSIVE STRENGTH IS GREATER THAN 2500 PSI, CONTRACTOR SHALL SUBMIT MIX DESIGNS TO ARCHITECT AND ENGINEER FOR APPROVAL SEVEN (7) DAYS PRIOR THE PLACEMENT. MIX DESIGNS SHALL BE PREPARED BY AN APPROVED TESTING LABORATORY. SUFFICIENT DATA MUST BE PROVIDED FOR ALL ADMIXTURES.
21. THE PROJECTING CORNERS OF COLUMNS, BEAMS, WALLS ETC. SHALL BE FORMED WITH 3/4" CHAMFER, UNLESS NOTED OTHERWISE ON ARCHITECTURAL DRAWINGS.
22. ALL CONCRETE ELEMENTS SHALL BE REINFORCED SINCE NO PLAIN CONCRETE IS PERMITTED. ALL CONCRETE ELEMENTS SHALL BE REINFORCED WITH A MINIMUM STEEL AREA OF 0.0018 TIMES THE CROSS-SECTIONAL AREA OF CONCRETE ELEMENT CONTINUOUS IN EACH DIRECTION, TYPICAL UNLESS NOTED OTHERWISE.
23. THE CONTRACTOR SHALL NOTIFY THE TESTING AGENCY AND OWNER 48 HOURS BEFORE POURING OF CONCRETE FOR INSPECTION OF REINFORCEMENT LAYOUT. NO CONCRETE SHALL BE POURED UNLESS ALL REINFORCEMENT AND INSTALLATIONS HAVE BEEN INSPECTED AND APPROVED BY THE TESTING AGENCEY.
24. LOCATION OF CONSTRUCTION JOINTS SHALL BE AS INDICATED ON STRUCTURAL DRAWINGS.
25. CONCRETE CAST ON SLOPED SURFACES SHALL BEGIN AT THE LOWEST ELEVATION AND CONTINUE MONOLITHICALLY TOWARD THE HIGHER ELEVATION UNTIL THE INTENDED CAST IS COMPLETED.
26. THE DEPTH OF REVEALS IN CONCRETE WALLS SHALL NOT BE GREATER THAN 3/8". WHERE REVEALS OCCUR IN CONCRETE WALLS, ADD 3/8" TO THE CLEAR COVER TO REINFORCEMENT BARS SHOWN ABOVE.
27. REFER TO ARCHITECTURAL DRAWINGS FOR FINISHING OF ALL EXPOSED CONCRETE SURFACES.

FOR PERMIT

08/01/2022
FOR PERMIT

TANGObuilder
2261 Market Street #4004
San Francisco CA, 94114
www.tangobuilder.com

REGISTERED PROFESSIONAL ENGINEER
JUAN BAUTISTA ALEMAN-HERNANDEZ
C 86746
EXP. 03/31/2023
CIVIL
STATE OF CALIFORNIA

REV#	DATE	DESCRIPTION

10315 KENNY LN

CALIFORNIA

GENERAL NOTES

PROJECT NUMBER:

S002

8/1/2022 4:10:21 PM

FASTENING SCHEDULE CBC TABLE 2304.10.1

ROOF		
BLOCKING BETWEEN CEILING JOISTS, RAFTERS OR TRUSSES TO TOP PLATE OR OTHER FRAMING BELOW	3-8D COMMON (21/2" × 0.131"); OR	EACH END, TOENAIL
	3-10D BOX (3" × 0.128"); OR	
	3-3" × 0.131" NAILS; OR	
	3-3"14 GAGE STAPLES, 7/16" CROWN	
BLOCKING BETWEEN RAFTERS OR TRUSS NOT AT THE WALL TOP PLATE, TO RAFTER OR TRUSS	2-8D COMMON (21/2" × 0.131")	EACH END, TOENAIL
	2-3" × 0.131" NAILS	
	2-3" 14 GAGE STAPLES	
	2-16 D COMMON (31/2" × 0.162")	END NAIL
	3-3" × 0.131" NAILS	
	3-3" 14 GAGE STAPLES	
FLAT BLOCKING TO TRUSS AND WEB FILLER	16D COMMON (31/2" × 0.162") @ 6" O.C.	FACE NAIL
	3" × 0.131" NAILS @ 6" O.C.	
	3" × 14 GAGE STAPLES @ 6" O.C	
CEILING JOISTS TO TOP PLATE	3-8D COMMON (21/2" × 0.131"); OR	EACH JOIST, TOENAIL
	3-10D BOX (3" × 0.128"); OR	
	3-3" × 0.131" NAILS; OR	
	3-3" 14 GAGE STAPLES, 7/16" CROWN	
CEILING JOIST NOT ATTACHED TO PARALLEL RAFTER, LAPS OVER PARTITIONS (NO THRUST)(SEE SECTION 2308.7.3.1, TABLE 2308.7.3.1)	3-16D COMMON (31/2" × 0.162"); OR	FACE NAIL
	4-10D BOX (3" × 0.128"); OR	
	4-3" × 0.131" NAILS; OR	
	4-3" 14 GAGE STAPLES, 7/16" CROWN	
CEILING JOIST ATTACHED TO PARALLEL RAFTER (HEEL JOINT)	PER TABLE 2308.7.3.1	FACE NAIL
(SEE SECTION 2308.7.3.1, TABLE 2308.7.3.1)		
COLLAR TIE TO RAFTER	3-10D COMMON (3" × 0.148"); OR	FACE NAIL
	4-10D BOX (3" × 0.128"); OR	
	4-3" × 0.131" NAILS; OR	
	4-3" 14 GAGE STAPLES, 7/16" CROWN	
RAFTER OR ROOF TRUSS TO TOP PLATE	3-10 COMMON (3" × 0.148"); OR	TOENAILC
(SEE SECTION 2308.7.5, TABLE 2308.7.5)	3-16D BOX (31/2" × 0.135"); OR	
	4-10D BOX (3" × 0.128"); OR	
	4-3" × 0.131 NAILS; OR	
	4-3" 14 GAGE STAPLES, 7/16" CROWN	
7. ROOF RAFTERS TO RIDGE VALLEY OR HIP RAFTERS; OR ROOF RAFTER TO 2-INCH RIDGE BEAM	2-16D COMMON (31/2" × 0.162"); OR	END NAIL
	3-10D BOX (3" × 0.128"); OR	
	3-3" × 0.131" NAILS; OR	
	3-3" 14 GAGE STAPLES, 7/16" CROWN; OR	
	3-10D COMMON (3" × 0.148"); OR	TOENAIL
	4-16D BOX (31/2" × 0.135"); OR	
	4-10D BOX (3" × 0.128"); OR	
	4-3" × 0.131" NAILS; OR	
	4-3" 14 GAGE STAPLES, 7/16" CROWN	

WALL		
STUD TO STUD (NOT AT BRACED WALL PANELS)	16D COMMON (31/2" × 0.162");	24" O.C. FACE NAIL
	10D BOX (3" × 0.128"); OR	16" O.C. FACE NAIL
	3" × 0.131" NAILS; OR	
	3-3" 14 GAGE STAPLES, 7/16" CROWN	
STUD TO STUD AND ABUTTING STUDS AT INTERSECTING WALL CORNERS (AT BRACED WALL PANELS)	16D COMMON (31/2" × 0.162"); OR	16" O.C. FACE NAIL
	16D BOX (31/2" × 0.135"); OR	12" O.C. FACE NAIL
	3" × 0.131" NAILS; OR	12" O.C. FACE NAIL
	3-3" 14 GAGE STAPLES, 7/16" CROWN	
BUILT-UP HEADER (2" TO 2" HEADER)	16D COMMON (31/2" × 0.162"); OR	16" O.C. EACH EDGE, FACE NAIL
	16D BOX (31/2" × 0.135")	12" O.C. EACH EDGE, FACE NAIL
CONTINUOUS HEADER TO STUD	4-8D COMMON (21/2" × 0.131"); OR	TOENAIL
	4-10D BOX (3" × 0.128")	
TOP PLATE TO TOP PLATE	16D COMMON (31/2" × 0.162"); OR	16" O.C. FACE NAIL
	10D BOX (3" × 0.128"); OR	12" O.C. FACE NAIL
	3" × 0.131" NAILS; OR	
	3" 14 GAGE STAPLES, 7/16" CROWN	
TOP PLATE TO TOP PLATE, AT END JOINTS	8-16D COMMON (31/2" × 0.162"); OR	EACH SIDE OF END JOINT, FACE NAIL (MINIMUM 24" LAP SPLICE LENGTH EACH SIDE OF END JOINT)
	12-10D BOX (3" × 0.128"); OR	
	12-3" × 0.131" NAILS; OR	
	12-3" 14 GAGE STAPLES, 7/16" CROWN	
BOTTOM PLATE TO JOIST, RIM JOIST, BAND JOIST OR BLOCKING (NOT AT BRACED WALL PANELS)	16D COMMON (31/2" × 0.162"); OR	16" O.C. FACE NAIL
	16D BOX (31/2" × 0.135"); OR	12" O.C. FACE NAIL
	3" × 0.131" NAILS; OR	
	3" 14 GAGE STAPLES, 7/16" CROWN	
BOTTOM PLATE TO JOIST, RIM JOIST, BAND JOIST OR BLOCKING AT BRACED WALL PANELS	2-16D COMMON (31/2" × 0.162"); OR	16" O.C. FACE NAIL
	3-16D BOX (31/2" × 0.135"); OR	
	4-3" × 0.131" NAILS; OR	
	4-3" 14 GAGE STAPLES, 7/16" CROWN	
STUD TO TOP OR BOTTOM PLATE	4-8D COMMON (21/2" × 0.131"); OR	TOENAIL
	4-10D BOX (3" × 0.128"); OR	
	4-3" × 0.131" NAILS; OR	
	4-3" 14 GAGE STAPLES, 7/16" CROWN; OR	
	2-16D COMMON (31/2" × 0.162"); OR	END NAIL
	3-10D BOX (3" × 0.128"); OR	
	3-3" × 0.131" NAILS; OR	
	3-3" 14 GAGE STAPLES, 7/16" CROWN	
TOP PLATES, LAPS AT CORNERS AND INTERSECTIONS	2-16D COMMON (31/2" × 0.162"); OR	FACE NAIL
	3-10D BOX (3" × 0.128"); OR	
	3-3" × 0.131" NAILS; OR	
	3-3" 14 GAGE STAPLES, 7/16" CROWN	
1" BRACE TO EACH STUD AND PLATE	2-8D COMMON (21/2" × 0.131"); OR	FACE NAIL
	2-10D BOX (3" × 0.128"); OR	
	2-3" × 0.131" NAILS; OR	
	2-3" 14 GAGE STAPLES, 7/16" CROWN	
1" × 6" SHEATHING TO EACH BEARING	2-8D COMMON (21/2" × 0.131"); OR	FACE NAIL
	2-10D BOX (3" × 0.128")	
1" × 8" AND WIDER SHEATHING TO EACH BEARING	3-8D COMMON (21/2" × 0.131"); OR	FACE NAIL
	3-10D BOX (3" × 0.128")	

FLOOR		
JOIST TO SILL, TOP PLATE, OR GIRDER	3-8D COMMON (21/2" × 0.131"); OR FLOOR	TOENAIL
	3-10D BOX (3" × 0.128"); OR	
	3-3" × 0.131" NAILS; OR	
	3-3" 14 GAGE STAPLES, 7/16" CROWN	
RIM JOIST, BAND JOIST, OR BLOCKING TO TOP PLATE, SILL OR OTHER FRAMING BELOW	8D COMMON (21/2" × 0.131"); OR	6" O.C., TOENAIL
	10D BOX (3" × 0.128"); OR	
	3" × 0.131" NAILS; OR	
	3" 14 GAGE STAPLES, 7/16" CROWN	
1" × 6" SUBFLOOR OR LESS TO EACH JOIST	2-8D COMMON (21/2" × 0.131"); OR	FACE NAIL
	2-10D BOX (3" × 0.128")	
2" SUBFLOOR TO JOIST OR GIRDER	2-16D COMMON (31/2" × 0.162")	FACE NAIL
2" PLANKS (PLANK & BEAM — FLOOR & ROOF)	2-16D COMMON (31/2" × 0.162")	EACH BEARING, FACE NAIL
BUILT-UP GIRDERS AND BEAMS, 2" LUMBER LAYERS	20D COMMON (4" × 0.192")	32" O.C., FACE NAIL AT TOP AND BOTTOM STAGGERED ON OPPOSITE SIDES
	10D BOX (3" × 0.128"); OR	24" O.C. FACE NAIL AT TOP AND BOTTOM STAGGERED ON OPPOSITE SIDES
	3" × 0.131" NAILS; OR	
	3" 14 GAGE STAPLES, 7/16" CROWN	
	AND:	ENDS AND AT EACH SPLICE, FACE NAIL
	2-20D COMMON (4" × 0.192"); OR	
	3-10D BOX (3" × 0.128"); OR	
	3-3" × 0.131" NAILS; OR	
	3-3" 14 GAGE STAPLES, 7/16" CROWN	
LEDGER STRIP SUPPORTING JOISTS OR RAFTERS	3-16D COMMON (31/2" × 0.162"); OR	EACH JOIST OR RAFTER, FACE NAIL
	4-10D BOX (3" × 0.128"); OR	
	4-3" × 0.131" NAILS; OR	
	4-3" 14 GAGE STAPLES, 7/16" CROWN	
JOIST TO BAND JOIST OR RIM JOIST	3-16D COMMON (31/2" × 0.162"); OR	END NAIL
	4-10D BOX (3" × 0.128"); OR	
	4-3" × 0.131" NAILS; OR	
	4-3" 14 GAGE STAPLES, 7/16" CROWN	
BRIDGING OR BLOCKING TO JOIST, RAFTER OR TRUSS	2-8D COMMON (21/2" × 0.131"); OR	EACH END, TOENAIL
	2-10D BOX (3" × 0.128"); OR	
	2-3" × 0.131" NAILS; OR	
	2-3" 14 GAGE STAPLES, 7/16" CROWN	

WOOD STRUCTURAL PANELS, COMBINATION SUBFLOOR UNDERLAYMENT TO FRAMING			
		EDGES (INCHES)	INTERMEDIATE SUPPORTS (INCHES)
3/4" AND LESS	8D COMMON (21/2" × 0.131"); OR	6	12
	6D DEFORMED (2" × 0.113")		
7/8" — 1"	8D COMMON (21/2" × 0.131"); OR	6	12
	8D DEFORMED (21/2" × 0.131")		
11/8" — 11/4"	10D COMMON (3" × 0.148"); OR	6	12
	8D DEFORMED (21/2" × 0.131")		
PANEL SIDING TO FRAMING			
1/2" OR LESS	6D CORROSION-RESISTANT SIDING	6	12
	(17/8" × 0.106"); OR		
	6D CORROSION-RESISTANT CASING (2" × 0.099")		
5/8"	8D CORROSION-RESISTANT SIDING	6	12
	(23/8" × 0.128"); OR		
	8D CORROSION-RESISTANT CASING		
	(21/2" × 0.113")		
INTERIOR PANELING			
1/4"	4D CASING (11/2" × 0.080"); OR	6	12
	4D FINISH (11/2" × 0.072")		
3/8"	6D CASING (2" × 0.099"); OR	6	12
	6D FINISH (PANEL SUPPORTS AT 24 INCHES)		
FOR SI: 1 INCH = 25.4 MM.			
A. NAILS SPACED AT 6 INCHES AT INTERMEDIATE SUPPORTS WHERE SPANS ARE 48 INCHES OR MORE. FOR NAILING OF WOOD STRUCTURAL PANEL AND PARTICLEBOARD DIAPHRAGMS AND SHEAR WALLS, REFER TO SECTION 2305. NAILS FOR WALL SHEATHING ARE PERMITTED TO BE COMMON, BOX OR CASING.			
B. SPACING SHALL BE 6 INCHES ON CENTER ON THE EDGES AND 12 INCHES ON CENTER AT INTERMEDIATE SUPPORTS FOR NONSTRUCTURAL APPLICATIONS. PANEL SUPPORTS AT 16 INCHES (20 INCHES IF STRENGTH AXIS IN THE LONG DIRECTION OF THE PANEL, UNLESS OTHERWISE MARKED).			
C. WHERE A RAFTER IS FASTENED TO AN ADJACENT PARALLEL CEILING JOIST IN ACCORDANCE WITH THIS SCHEDULE AND THE CEILING JOIST IS FASTENED TO THE TOP PLATE IN ACCORDANCE WITH THIS SCHEDULE. THE NUMBER OF TOENAILS IN THE RAFTER SHALL BE PERMITTED TO BE REDUCED BY ONE NAIL.			
D. RSRS-01 IS A ROOF SHEATHING RING SHANK NAIL MEETING THE SPECIFICATIONS IN ASTM F1667.			

FOUNDATIONS

1. THE FOUNDATION DESIGN IS BASED ON SECTION 1806.2 OF CBC
2. THE FOLLOWING PARAMETERS WERE USED IN THE DESIGN OF FOUNDATIONS.

PARAMETER		VALUE
MAXIMUM ALLOWABLE SOIL BEARING PRESSURE BELOW MAIN BUILDING (DL + LL)	SPREAD FOOTING AND CONTINOUS FOOTING	1,500 PSF

1. REFER TO STRUCTURAL DESIGN PARAMETERS SECTION FOR ALL SEISMIC DESIGN VALUES USED IN CALCULATIONS.
2. SOILS VALUES PER TABLE 1806.2 OF THE LATEST EDITION OF THE GOVERNING BUILDING CODE.
3. FOOTING DEPTH DIMENSION ARE INTO UNDISTURBED SOIL OR ENGINEERED FILL APPROVED BY THE GEOTECHNICAL ENGINEER, IF APPLICABLE. FINAL FOOTING DEPTH SHALL BE MEASURED FROM LOWEST ADJACENT GRADE OR BOTTOM OF APPROVED FILL.
4. ALL COMPACTION, FILL, BACKFILLING AND SITE PREPARATION SHALL BE PERFORMED IN ACCORDANCE WITH PROJECT SOILS REPORT OR THE GOVERNING BUILDING CODE CHAPTER 18 & APPENDIX J. ALL SUCH WORK SHALL BE PERFORMED UNDER THE SUPERVISION OF THE BUILDING OFFICIAL.
5. REMOVE LOOSE SOIL AND STANDING WATER FROM FOUNDATION EXCAVATIONS PRIOR TO PLACING CONCRETE. THE GEOTECHNICAL ENGINEER (IF APPLICABLE) SHALL INSPECT AND APPROVE ALL EXCAVATIONS, SOIL COMPACTION WORK PRIOR TO PLACEMENT OF ANY REBAR OR CONCRETE, SHORING INSTALLATIONS, BACKFILL MATERIALS AND BACK FILLING PROCEDURES.
6. MINIMUM CLEARANCE OF 8" SHALL BE PROVIDED BETWEEN EARTH AND WOOD IN ALL LOCATIONS PER CBC 2304.12. FOUNDATIONS SHALL BE POURED IN NEAT EXCAVATIONS.
7. EXCAVATE ALL FOUNDATIONS TO REQUIRED DEPTHS INTO COMPACTED FILL OR NATURAL SOIL (AS PER PLANS AND DETAILS) AND AS VERIFIED BY THE BUILDING OFFICIAL AND/OR SOILS ENGINEER (IF APPLICABLE).
8. ALL FOUNDATIONS SHALL BE INSPECTED AND APPROVED BY THE APPROPRIATE BUILDING OFFICIAL AND/OR A REPRESENTATIVE OF THE SOILS ENGINEER PRIOR TO FORMING AND PLACEMENT OF REINFORCING OR CONCRETE.
9. FOUNDATIONS SHALL NOT BE POURED UNTIL ALL REQUIRED REINFORCING STEEL, FRAMING HARDWARE, SLEEVES, INSERTS, CONDUITS, PIPES, ETC. AND FORMWORK IS PROPERLY PLACED AND INSPECTED BY THE APPROPRIATE BUILDING OFFICIAL/INSPECTOR(S).
10. IT IS THE RESPONSIBILITY OF THE CONTRACTOR IN CHARGE OF FRAMING TO PROPERLY POSITION ALL HOLDOWN BOLTS, ANCHOR BOLTS, COLUMN BASES, AND ALL OTHER CAST-IN-PLACE HARDWARE. REFER TO TYPICAL DETAILS. ALL HARDWARE TO BE SECURED PRIOR TO FOUNDATION INSPECTIONS.
11. THE SIDES AND BOTTOMS OF DRY EXCAVATIONS MUST BE MOISTENED JUST PRIOR TO PLACING CONCRETE. CONVERSELY, DE-WATER FOOTINGS AS REQUIRED TO REMOVE STANDING WATER AND TO MAINTAIN OPTIMUM WORKING CONDITIONS.
12. THE CONTRACTOR SHALL BE SOLELY RESPONSIBLE FOR ALL EXCAVATION PROCEDURES INCLUDING LAGGING, SHORING, AND THE PROTECTION OF ADJACENT PROPERTY, STRUCTURES, STREETS, AND UTILITIES IN ACCORDANCE WITH ALL FEDERAL, STATE AND LOCAL SAFETY ORDINANCES. THE CONTRACTOR SHALL PROVIDE FOR THE DESIGN AND INSTALLATION OF ALL CRIBBING, BRACING AND SHORING REQUIRED.
13. BACKFILLING AGAINST RETAINING/BASEMENT WALLS WHERE THERE IS GRADE ON BOTH SIDES OF THE WALL SHALL BE CARRIED OUT IN SUCH A MANNER THAT THE DIFFERENCE IN SOIL LEVEL IS NEVER MORE THAN 3.0 FEET.DO NOT PLACE BACKFILL BEHIND WALLS RETAINING EARTH BEFORE CONCRETE HAS ATTAINED FULL DESIGN STRENGTH UNLESS TEMPORARY BRACING IS PROVIDED.
14. BACKFILL SHALL NOT BE PLACED AGAINST WALLS RETAINING EARTH (OTHER THAN CANTILEVER WALLS) UNTIL THE ATTACHING FLOORS/SLABS (AT TOP AND BOTTOM OF THE WALL) ARE COMPLETELY IN PLACE AND HAVE ATTAINED FULL DESIGN STRENGTH.
15. NEW FOOTINGS WHICH ARE LOCATED IMMEDIATELY ADJACENT TO EXISTING FOOTINGS SHALL BE FOUNDED AT THE SAME ELEVATION AS THE EXISTING FOOTINGS UNLESS NOTED OTHERWISE. EXISTING ADJACENT FOOTINGS SHALL NOT BE UNDERMINED BY EXCAVATION OR NEW CONSTRUCTION.
16. WATER SHALL NOT BE ALLOWED TO STAND IN TRENCHES BEFORE OR AFTER CONCRETE IS PLACED. IF TRENCHES BECOME SOFTENED DUE TO RAIN OR OTHER WATER BEFORE THE FOOTINGS ARE CAST, THE GEOTECHNICAL ENGINEER SHALL REVIEW THE CONDITIONS AND PROVIDE THE NECESSARY MITIGATION REQUIREMENTS TO THE CONTRACTOR.
17. REFER TO PLUMBING AND/OR CIVIL DRAWINGS FOR UNDER-FLOOR AND PERIMETER WALL DRAINAGE SYSTEMS AND SPECIAL GRANULAR FILL MATERIALS FOR SUCH DRAINAGE.

REINFORCING STEEL FOR CONCRETE AND MASONRY

1. STEEL REINFORCEMENT BARS SHALL BE AS FOLLOWS:
   - A. DEFORMED BARS CONFORMING TO ASTM A615 GRADE 60 UNO.
   - B. DEFORMED BARS CONFORMING TO ASTM A970 FOR HEADED DEFORMED BARS.
   - C. HEADED STUDS AND HEADED STUD ASSEMBLIES FOR SHEAR REINFORCEMENT OF CONCRETE CONFORMING TO ASTM A1044.
2. MECHANICAL SPLICES SHALL BE TYPE 2 COUPLERS (UNO) WITH A CURRENT ICC APPROVAL.
3. MINIMUM LAP OF WELDED WIRE REINFORCEMENT SHALL BE 6" OR ONE FULL MESH PLUS 2", WHICHEVER IS GREATER.
4. REINFORCING BARS SHALL BE LAP SPLICED PER THE LAP SPLICE LENGTH SCHEDULE. LAP SPLICES SHALL BE SECURELY TIED AT ALL SIDE AND END LAPS.
5. REINFORCING BARS MARKED AS "CONTINUOUS" SHALL BE LAP SPLICED PER LAP SPLICE LENGTH SCHEDULE.
6. REINFORCING BAR SPLICES SHALL BE MADE ONLY WHERE INDICATED ON THE DRAWINGS. WHERE SPLICE LOCATIONS ARE NOT SHOWN ON THE DRAWINGS, THE CONTRACTOR SHALL SHOW THEIR PROPOSED SPLICE LOCATIONS ON THE SHOP DRAWINGS.
7. ALL BARS AT NON-CONTINUOUS ENDS SHALL HAVE A STANDARD HOOK.
8. DOWELS CONNECTING WALLS OR COLUMNS TO FOUNDATIONS SHALL BE THE SAME GRADE, SIZE AND SPACING AS THE VERTICAL REINFORCING BARS IN THE WALLS OR COLUMNS, UNLESS NOTED OTHERWISE.
9. ALL DOWELS SHALL BE FULLY DEVELOPED IN TENSION UNLESS NOTED OTHERWISE.
10. ADDITIONAL REINFORCEMENTS SHALL BE PROVIDED AROUND ALL SLAB AND WALL OPENINGS AS SHOWN ON THE TYPICAL DETAILS UNLESS NOTED OTHERWISE.
11. WHERE VERTICAL DOWELS FROM FOUNDATION INTERFERE WITH STEEL COLUMN BASE PLATE, THE CONTRACTOR SHALL RELOCATE THESE DOWELS THREE (3) INCHES FROM EDGE OF BASE PLATE.
12. ALL WALLS SHALL BE INTERCONNECTED AT CORNERS AND INTERSECTIONS WITH DOWELS MATCHING HORIZONTAL REINFORCEMENT PER TYPICAL DETAILS UNLESS NOTED OTHERWISE.
13. ALL FOUNDATION S AND GRADE BEAM REINFORCEMENT SHALL BE CONTINUOUS THROUGH INTERSECTING FOUNDATIONS AND GRADE BEAMS UNLESS NOTED OTHERWISE.
14. BARS SHALL NOT BE BENT OR TWISTED IN THE FIELD, UNLESS SPECIFICALLY DETAILED ON THE STRUCTURAL DRAWINGS.
15. ALL REINFORCING BARS, INSERTS, EMBEDS ETC. SHALL BE SECURELY HELD IN PLACE TO MAINTAIN THEIR POSITIONS WHILE CONCRETE IS POURED. PROVIDE SUITABLE CHAIRS, TIES, SPACERS, ADDITIONAL BARS AND STIRRUPS AS REQUIRED.

FOR PERMIT

08/01/2022
FOR PERMIT

TANGObuilder
2261 Market Street #4004
San Francisco CA, 94114
www.tangobuilder.com

REGISTERED PROFESSIONAL ENGINEER
JUAN BAUTISTA ALEMAN FERNANDEZ
C 86746
EXP. 03/31/2023
STATE OF CALIFORNIA

REV#	DATE	DESCRIPTION

10315 KENNY LN

CALIFORNIA

GENERAL NOTES

PROJECT NUMBER:

S003

8/1/2022 4:10:22 PM

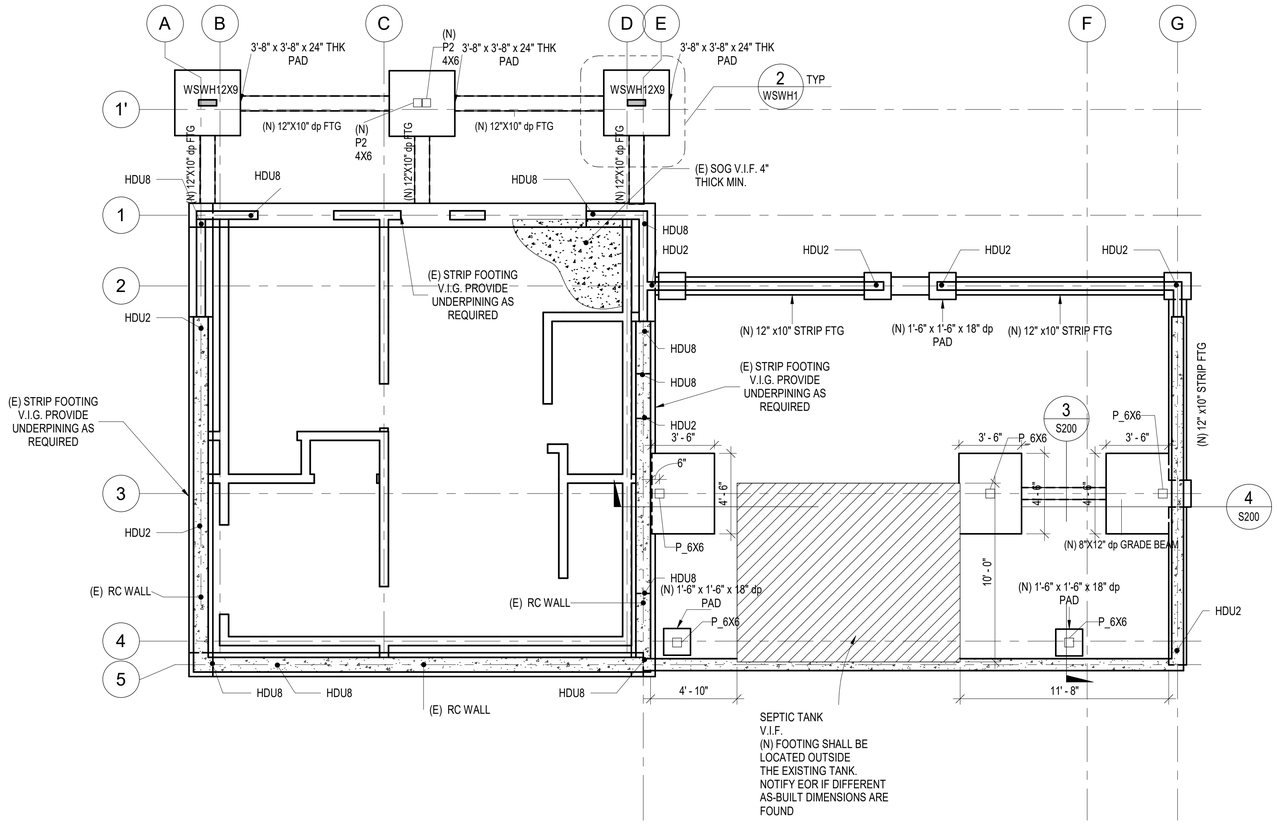

1 S200 GROUND FLOOR PLAN

SCALE 1/4" = 1'-0"

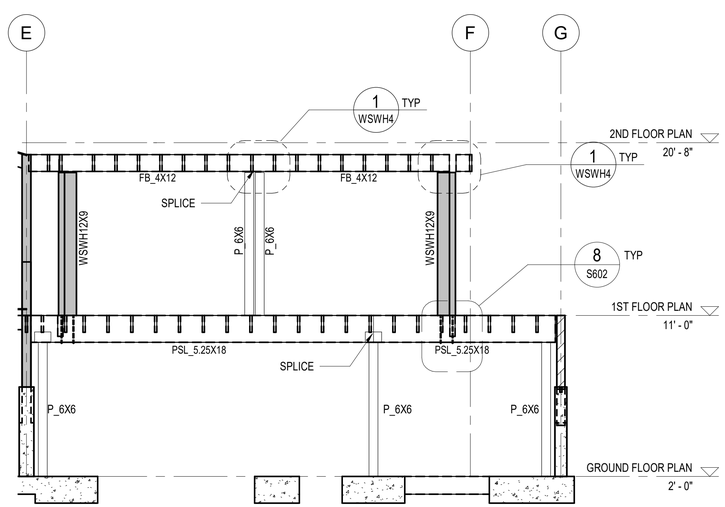

4 S200 STRONG WALL ELEVATION ALONG GL 3

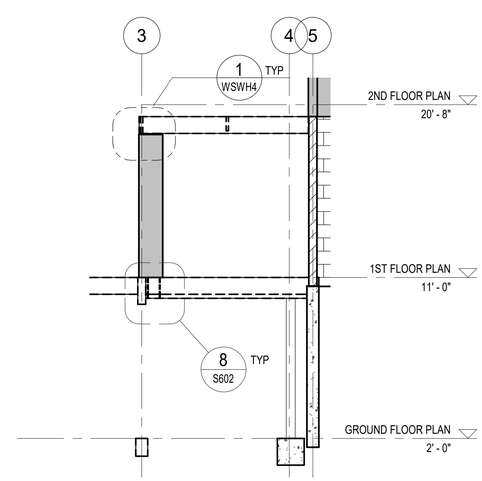

3 S200 SECTION

SYMBOLS

- ROOF SLOPE
- SOIL
- REVISION LETTER
- UPDATED OR REVIEWED ZONE
- OPEN — FLOOR OPENING
- EL. +0'-0" — SPOT ELEVATION
- (E) STUD WALLS
- (N) NONBEARING STUD WALLS
- (E) WALLS TO BE STRENGTHENED WITH STRUC. PLY.

ABREVIATIONS

SOG	SLAB ON GRADE
HDU	HOLDOWN ANCHOR
SAD	SEE ARCHITECTURAL DRAWINGS
SIM	SIMILAR
TYP	TYPICAL DETAIL

FRAMING NOTES

1. WALLS SHOWN AS SOLID ARE BELOW FRAMING. SEE ARCHITECTURAL DRAWINGS FOR STUD SIZES AND OTHER REQUIREMENTS. WALLS ABOVE FRAMING ARE NOT SHOWN FOR CLARITY.

2. SEE ARCHITECTURAL DRAWINGS FOR ALL DIMENSIONS, ELEVATIONS, ETC. THE PROJECT ARCHITECT IS RESPONSIBLE FOR SPECIFYING DIMENSIONS TO ALL PROJECT ELEMENTS. THE DIMENSIONS SHOWN ON THE FOUNDATION PLANS SHALL NOT BE USED FOR CONSTRUCTION. THE FOUNDATION SHALL BE CONSTRUCTED USING THE DIMENSIONS SHOWN ON THE ARCHITECTURAL PLANS.

3. DETAIL KEYS AND OTHER INFORMATION ARE TYPICAL.

4. ALL BEAMS SHALL BE CONSIDERED FLUSH, (TOP OF BEAM EQUAL TO TOP OF ROOF FRAMING AND BOTTOM OF ROOF FRAMING) UNLESS NOTED OTHERWISE ON PLANS.

5. INSTALL POSTS (POST SIZE TO MATCH BEAM AND WALL SIZE), MINIMUM BELOW ALL ROOF BEAMS AND GIRDERS. CONTRACTOR SHALL VERIFY FRAMING LAYOUT TO ENSURE CONTINUOUS AND SOLID BLOCKING UNDER ALL CONCENTRATED LOADS.

6. WINDOW AND DOOR HEADERS SHALL CONFORM TO THE HEADER SCHEDULE, U.N.O. ON THE PLAN.

7. SEE GENERAL NOTES FOR ADDITIONAL REQUIREMENTS. ALL DETAIL CALLOUTS SHALL BE CONSIDERED TYPICAL. THE CONTRACTOR SHALL REVIEW THE DETAIL SHEETS FOR DETAILS NOT SPECIFICALLY REFERENCED.

8. LENGTHS OF SHEARWALLS ARE SHOWN ABOVE OR BELOW SHEARWALL NUMBER (SEE PLAN). THE NUMBERS INDICATE THE MIN. DESIGN LENGTH OF THE SHEARWALL.

9. HOLDOWN ANCHORS ARE SHOWN AT THE BASE OF THE WALLS WHERE THEY OCCUR.

FOUNDATION NOTES

1. SEE ARCHITECTURAL DRAWINGS FOR ALL DIMENSIONS, ELEVATIONS, ETC. THE PROJECT ARCHITECT IS RESPONSIBLE FOR SPECIFYING DIMENSIONS TO ALL PROJECT ELEMENTS.

2. THE DIMENSIONS SHOWN ON THE FOUNDATION PLANS SHALL NOT BE USED FOR CONSTRUCTION. THE FOUNDATION SHALL BE CONSTRUCTED USING THE DIMENSIONS SHOWN ON THE ARCHITECTURAL PLANS.

3. DETAIL KEYS AND OTHER INFORMATION ARE TYPICAL.

4. STEP FOUNDATION AS REQUIRED FOR FLOOR ELEVATION CHANGES AND COMPLIANCE WITH DETAILS. THE CONTRACTOR SHALL GRADE THE SITE TO PROVIDE PROPER SURFACE DRAINAGE AWAY FROM THE FOUNDATION AT ALL LOCATIONS. ROOF GUTTER DOWNSPOUTS SHALL NOT DISCHARGE NEAR THE FOUNDATION.

5. LANDSCAPE SLABS SHALL BE INDEPENDENT OF THE FOUNDATION. THE CONTRACTOR SHALL INSTALL ASPHALT-IMPREGNATED EXPANSIVE JOINT MATERAIL BETWEEN SLABS AND THE FOUNDATION.

6. HOLDOWNS NOTED OCCUR AT THE LEVEL OF FRAMING SHOWN FOR CONNECTION OF WALLS ABOVE TO FOOTING.

7. ALL HOLDOWN MEMBERS IN CONTACT WITH P.T. MATERIAL SHALL BE HOT-DIP GALVANIZED. USE HOT-DIPPED GALVANIZED ANCHOR BOLTS WITH 3" X 3" X 1/4" PLATE WASHERS. PLAIN CARBON STEEL FASTENERS IN SBX/DOT AND ZINC BORATE PRESERVATIVE-TREATED WOOD SHALL BE PERMITTED.

8. CONTRACTOR SHALL REVIEW HOLDOWN ANCHOR REQUIREMENTS FOR EMBEDMENT CONDITIONS THAT REQUIRE DEEPENED STEM WALL.

9. PROVIDE POSTS AT ALL HOLDOWNS. WHERE DOUBLE 2x POSTS ARE USED, SISTER WITH 16d FACE NAILS AT SILL NAILING PER SHEARWALL SCHEDULE. WHERE 3x MEMBERS AT PANEL EDGES ARE REQUIRED, USE 4x MINIMUM POST FOR HOLDOWN. FRAMER SHALL CONFIRM LAYOUT BEFORE CONCRETE IS POURED. NOTIFY ENGINEER OF CONFLICTS PRIOR TO PROCEEDING.

10.ALL FOUNDATION PLATES AND MUDSILLS SHALL BE PRESSURE-TREATED DOUGLAS FIR MARKED OR BRANDED BY AN APPROVED AGENCY. SEE SHEARWALL SCHEDULE FOR SHEARWALL LOCATIONS THAT REQUIRE 3x MINIMUM MUDSILLS. FOUNDATION PLATES AND MUDSILLS SHALL BE BOLTED TO THE FOUNDATION WITH NOT LESS THAN 5/8" DIA. HOT-DIPPED GALVANIZED ANCHOR BOLTS WITH 3" x 3" x 1/4" PLATE WASHERS. PLAIN CARBON STEEL FASTENERS IN SBX/DOT AND ZINC BORATE PRESERVATIVE-TREATED WOOD SHALL BE PERMITTED. EMBED ANCHOR BOLTS 7" INTO CONCRETE FOUNDATION, WALL OR 12" INTO GROUTED MASONRY, AND SPACE NOT MORE THAN 4'-0" APART, UNLESS NOTED OTHERWISE ON THE SHEARWALL SCHEDULE. THERE SHALL BE A MINIMUM OF TWO BOLTS PER BOARD WITH ONE BOLT LOCATED 12" MAXIMUM AND 4-3/8" MINIMUM OF EACH END.

11. SEE GENERAL NOTES FOR ADDITIONAL REQUIREMENTS ALL DETAIL CALLOUTS SHALL BE CONSIDERED TYPICAL. CONTRACTOR SHALL REVIEW THE DETAIL SHEETS FOR DETAILS NOT SPECIFICALLY REFERENCED.

FOR PERMIT

08/01/2022
FOR PERMIT

TANGObuilder
2261 Market Street #4004
San Francisco CA, 94114
www.tangobuilder.com

REGISTERED PROFESSIONAL ENGINEER
JUAN BAUTISTA ALEMAN FERNANDEZ
C 86746
EXP. 03/31/2023
STATE OF CALIFORNIA

REV#	DATE	DESCRIPTION

10315 KENNY LN

CALIFORNIA

STRUCTURAL PLAN VIEWS AND ELEVATIONS

PROJECT NUMBER:

S200

8/1/2022 4:10:23 PM

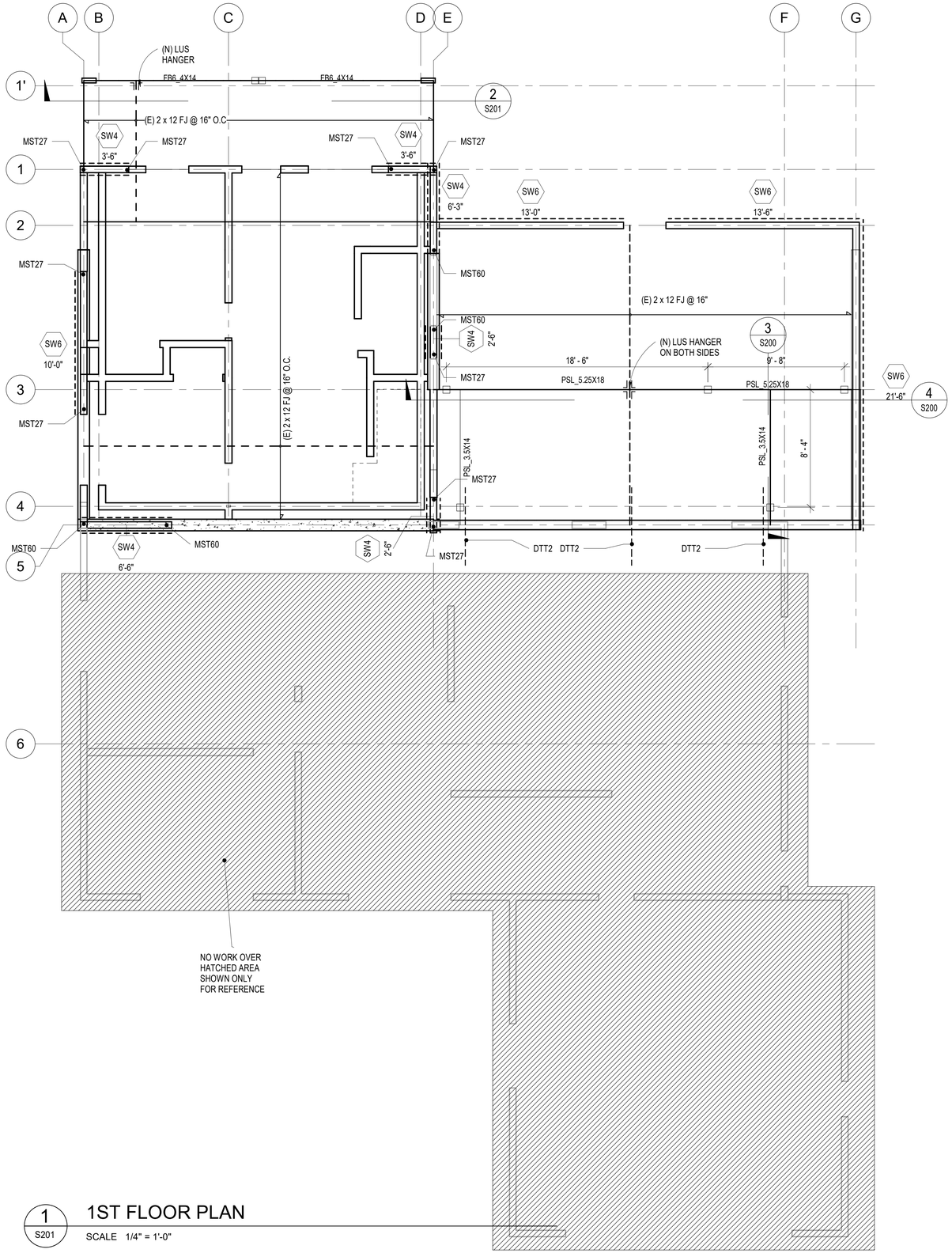

1 S201 1ST FLOOR PLAN

SCALE 1/4" = 1'-0"

SYMBOLS

- ROOF SLOPE
- SOIL
- /C REVISION LETTER
- UPDATED OR REVIEWED ZONE
- OPEN: FLOOR OPENING
- EL. +0'-0" SPOT ELEVATION
- (E) STUD WALLS
- (N) NONBEARING STUD WALLS
- (E) WALLS TO BE STRENGTHENED WITH STRUC. PLY.

ABREVIATIONS

SOG	SLAB ON GRADE
HDU	HOLDOWN ANCHOR
SAD	SEE ARCHITECTURAL DRAWINGS
SIM	SIMILAR
TYP	TYPICAL DETAIL

FRAMING NOTES

1. WALLS SHOWN AS SOLID ARE BELOW FRAMING. SEE ARCHITECTURAL DRAWINGS FOR STUD SIZES AND OTHER REQUIREMENTS. WALLS ABOVE FRAMING ARE NOT SHOWN FOR CLARITY.

2. SEE ARCHITECTURAL DRAWINGS FOR ALL DIMENSIONS, ELEVATIONS, ETC. THE PROJECT ARCHITECT IS RESPONSIBLE FOR SPECIFYING DIMENSIONS TO ALL PROJECT ELEMENTS. THE DIMENSIONS SHOWN ON THE FOUNDATION PLANS SHALL NOT BE USED FOR CONSTRUCTION. THE FOUNDATION SHALL BE CONSTRUCTED USING THE DIMENSIONS SHOWN ON THE ARCHITECTURAL PLANS.

3. DETAIL KEYS AND OTHER INFORMATION ARE TYPICAL.

4. ALL BEAMS SHALL BE CONSIDERED FLUSH, (TOP OF BEAM EQUAL TO TOP OF ROOF FRAMING AND BOTTOM OF ROOF FRAMING) UNLESS NOTED OTHERWISE ON PLANS.

5. INSTALL POSTS (POST SIZE TO MATCH BEAM AND WALL SIZE), MINIMUM BELOW ALL ROOF BEAMS AND GIRDERS. CONTRACTOR SHALL VERIFY FRAMING LAYOUT TO ENSURE CONTINUOUS AND SOLID BLOCKING UNDER ALL CONCENTRATED LOADS.

6. WINDOW AND DOOR HEADERS SHALL CONFORM TO THE HEADER SCHEDULE, U.N.O. ON THE PLAN.

7. SEE GENERAL NOTES FOR ADDITIONAL REQUIREMENTS. ALL DETAIL CALLOUTS SHALL BE CONSIDERED TYPICAL. THE CONTRACTOR SHALL REVIEW THE DETAIL SHEETS FOR DETAILS NOT SPECIFICALLY REFERENCED.

8. LENGTHS OF SHEARWALLS ARE SHOWN ABOVE OR BELOW SHEARWALL NUMBER (SEE PLAN). THE NUMBERS INDICATE THE MIN. DESIGN LENGTH OF THE SHEARWALL.

9. HOLDOWN ANCHORS ARE SHOWN AT THE BASE OF THE WALLS WHERE THEY OCCUR.

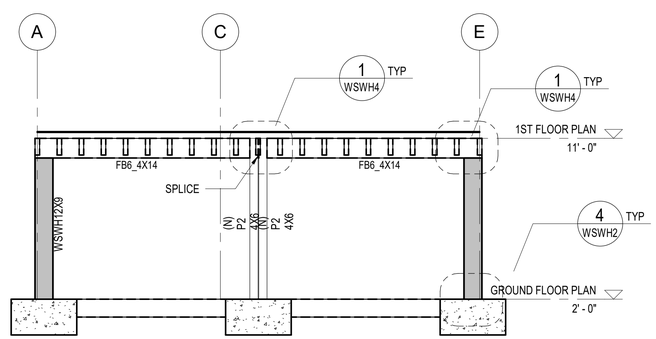

2 S201 STRONG WALL ALONG GL 1'

FOR PERMIT

08/01/2022
FOR PERMIT

TANGObuilder
2261 Market Street #4004
San Francisco CA, 94114
www.tangobuilder.com

REGISTERED PROFESSIONAL ENGINEER
ALEXANDER ALEMAN-FERNANDEZ
C 86746
EXP. 03/31/2023
STATE OF CALIFORNIA

REV#	DATE	DESCRIPTION

10315 KENNY LN

CALIFORNIA

STRUCTURAL PLAN VIEWS AND ELEVATIONS

PROJECT NUMBER:

S201

8/1/2022 4:10:24 PM

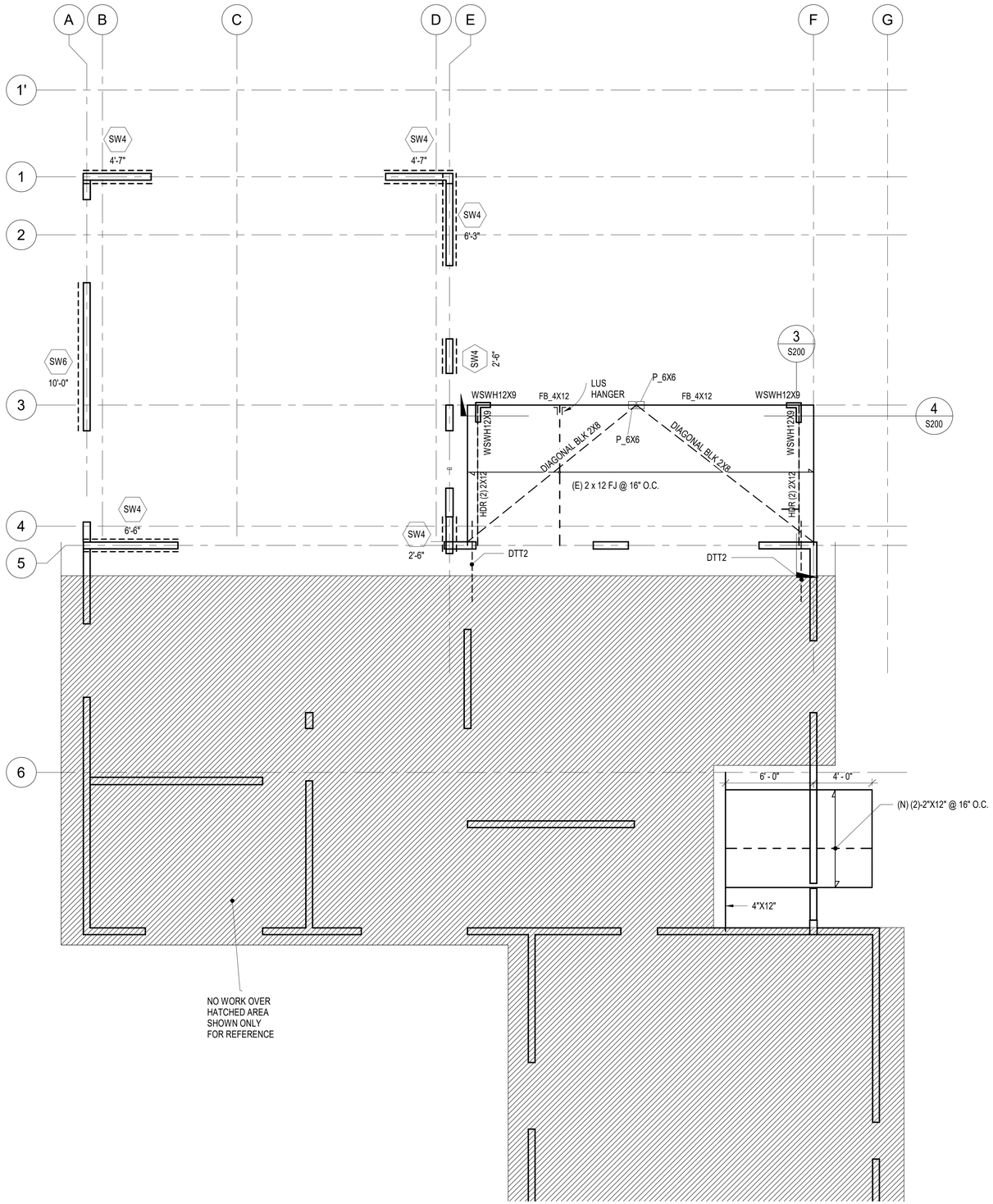

1
S202

2ND FLOOR PLAN

SCALE 1/4" = 1'-0"

SYMBOLS

- ROOF SLOPE
- SOIL
- REVISION LETTER (C)
- UPDATED OR REVIEWED ZONE
- OPEN — FLOOR OPENING
- EL. +0'-0" — SPOT ELEVATION
- (E) STUD WALLS
- (N) NONBEARING STUD WALLS
- (E) WALLS TO BE STRENGTHENED WITH STRUC. PLY.

ABREVIATIONS

SOG	SLAB ON GRADE
HDU	HOLDOWN ANCHOR
SAD	SEE ARCHITECTURAL DRAWINGS
SIM	SIMILAR
TYP	TYPICAL DETAIL

FRAMING NOTES

1. WALLS SHOWN AS SOLID ARE BELOW FRAMING. SEE ARCHITECTURAL DRAWINGS FOR STUD SIZES AND OTHER REQUIREMENTS. WALLS ABOVE FRAMING ARE NOT SHOWN FOR CLARITY.

2. SEE ARCHITECTURAL DRAWINGS FOR ALL DIMENSIONS, ELEVATIONS, ETC. THE PROJECT ARCHITECT IS RESPONSIBLE FOR SPECIFYING DIMENSIONS TO ALL PROJECT ELEMENTS. THE DIMENSIONS SHOWN ON THE FOUNDATION PLANS SHALL NOT BE USED FOR CONSTRUCTION. THE FOUNDATION SHALL BE CONSTRUCTED USING THE DIMENSIONS SHOWN ON THE ARCHITECTURAL PLANS.

3. DETAIL KEYS AND OTHER INFORMATION ARE TYPICAL.

4. ALL BEAMS SHALL BE CONSIDERED FLUSH, (TOP OF BEAM EQUAL TO TOP OF ROOF FRAMING AND BOTTOM OF ROOF FRAMING) UNLESS NOTED OTHERWISE ON PLANS.

5. INSTALL POSTS (POST SIZE TO MATCH BEAM AND WALL SIZE), MINIMUM BELOW ALL ROOF BEAMS AND GIRDERS. CONTRACTOR SHALL VERIFY FRAMING LAYOUT TO ENSURE CONTINUOUS AND SOLID BLOCKING UNDER ALL CONCENTRATED LOADS.

6. WINDOW AND DOOR HEADERS SHALL CONFORM TO THE HEADER SCHEDULE, U.N.O. ON THE PLAN.

7. SEE GENERAL NOTES FOR ADDITIONAL REQUIREMENTS. ALL DETAIL CALLOUTS SHALL BE CONSIDERED TYPICAL. THE CONTRACTOR SHALL REVIEW THE DETAIL SHEETS FOR DETAILS NOT SPECIFICALLY REFERENCED.

8. LENGTHS OF SHEARWALLS ARE SHOWN ABOVE OR BELOW SHEARWALL NUMBER (SEE PLAN). THE NUMBERS INDICATE THE MIN. DESIGN LENGTH OF THE SHEARWALL.

9. HOLDOWN ANCHORS ARE SHOWN AT THE BASE OF THE WALLS WHERE THEY OCCUR.

FOR PERMIT

08/01/2022
FOR PERMIT

TANGObuilder
2261 Market Street #4004
San Francisco CA, 94114
www.tangobuilder.com

REGISTERED PROFESSIONAL ENGINEER
JAN BUSTA ALEMAN-FERNANDEZ
C 86746
EXP. 03/31/2023
STATE OF CALIFORNIA

REV#	DATE	DESCRIPTION

10315 KENNY LN

CALIFORNIA

STRUCTURAL PLAN VIEWS AND ELEVATIONS

PROJECT NUMBER:

S202

8/1/2022 4:10:24 PM

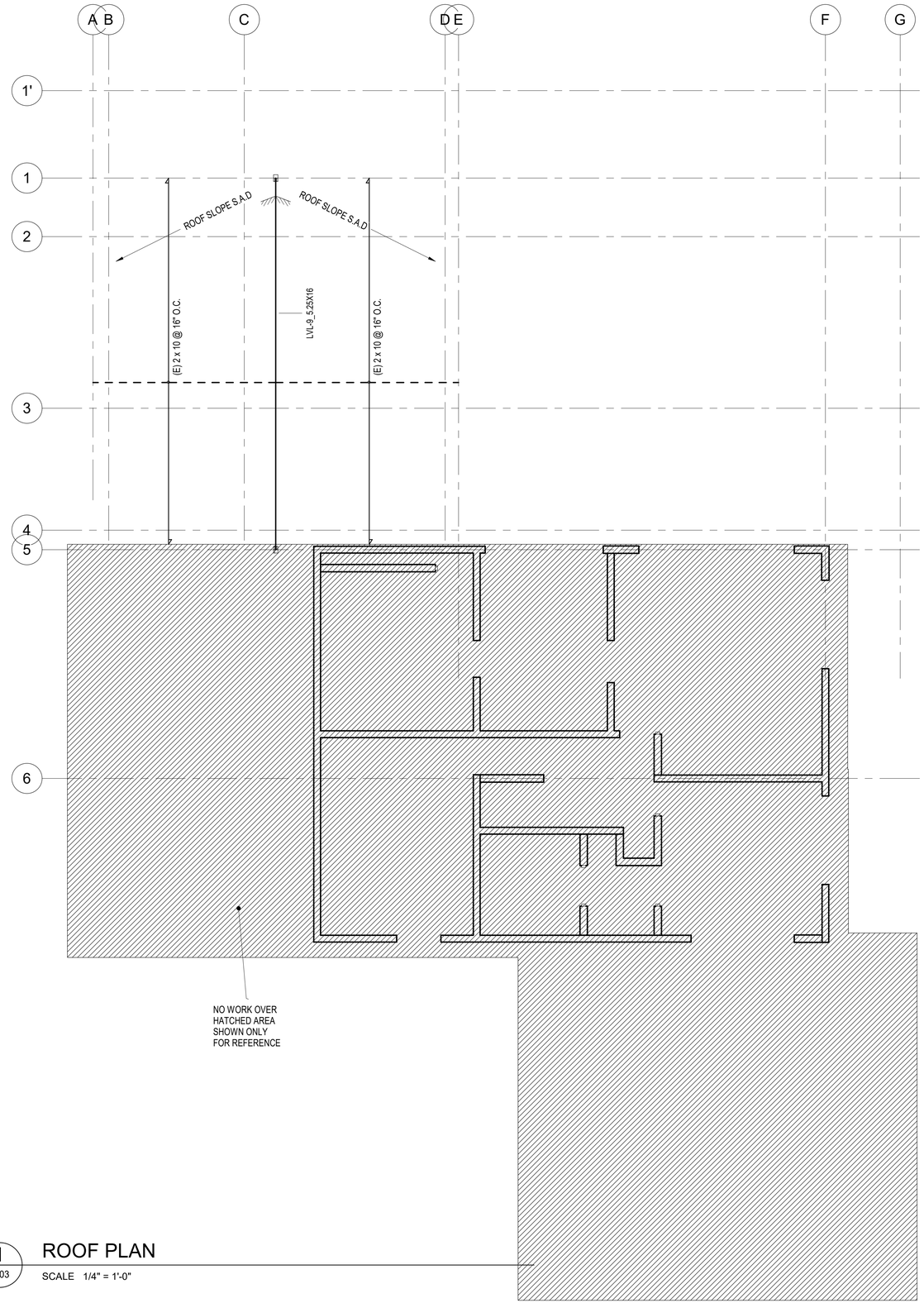

1
S203

ROOF PLAN

SCALE 1/4" = 1'-0"

SYMBOLS

- ROOF SLOPE
- SOIL
- C — REVISION LETTER
- UPDATED OR REVIEWED ZONE
- OPEN — FLOOR OPENING
- EL. +0'-0" — SPOT ELEVATION
- (E) STUD WALLS
- (N) NONBEARING STUD WALLS
- (E) WALLS TO BE STRENGTHENED WITH STRUC. PLY.

ABREVIATIONS

SOG	SLAB ON GRADE
HDU	HOLDOWN ANCHOR
SAD	SEE ARCHITECTURAL DRAWINGS
SIM	SIMILAR
TYP	TYPICAL DETAIL

FRAMING NOTES

1. WALLS SHOWN AS SOLID ARE BELOW FRAMING. SEE ARCHITECTURAL DRAWINGS FOR STUD SIZES AND OTHER REQUIREMENTS. WALLS ABOVE FRAMING ARE NOT SHOWN FOR CLARITY.

2. SEE ARCHITECTURAL DRAWINGS FOR ALL DIMENSIONS, ELEVATIONS, ETC. THE PROJECT ARCHITECT IS RESPONSIBLE FOR SPECIFYING DIMENSIONS TO ALL PROJECT ELEMENTS. THE DIMENSIONS SHOWN ON THE FOUNDATION PLANS SHALL NOT BE USED FOR CONSTRUCTION. THE FOUNDATION SHALL BE CONSTRUCTED USING THE DIMENSIONS SHOWN ON THE ARCHITECTURAL PLANS.

3. DETAIL KEYS AND OTHER INFORMATION ARE TYPICAL.

4. ALL BEAMS SHALL BE CONSIDERED FLUSH, (TOP OF BEAM EQUAL TO TOP OF ROOF FRAMING AND BOTTOM OF ROOF FRAMING) UNLESS NOTED OTHERWISE ON PLANS.

5. INSTALL POSTS (POST SIZE TO MATCH BEAM AND WALL SIZE), MINIMUM BELOW ALL ROOF BEAMS AND GIRDERS. CONTRACTOR SHALL VERIFY FRAMING LAYOUT TO ENSURE CONTINUOUS AND SOLID BLOCKING UNDER ALL CONCENTRATED LOADS.

6. WINDOW AND DOOR HEADERS SHALL CONFORM TO THE HEADER SCHEDULE, U.N.O. ON THE PLAN.

7. SEE GENERAL NOTES FOR ADDITIONAL REQUIREMENTS. ALL DETAIL CALLOUTS SHALL BE CONSIDERED TYPICAL. THE CONTRACTOR SHALL REVIEW THE DETAIL SHEETS FOR DETAILS NOT SPECIFICALLY REFERENCED.

8. LENGTHS OF SHEARWALLS ARE SHOWN ABOVE OR BELOW SHEARWALL NUMBER (SEE PLAN). THE NUMBERS INDICATE THE MIN. DESIGN LENGTH OF THE SHEARWALL.

9. HOLDOWN ANCHORS ARE SHOWN AT THE BASE OF THE WALLS WHERE THEY OCCUR.

FOR PERMIT

08/01/2022
FOR PERMIT

TANGObuilder
2261 Market Street #4004
San Francisco CA, 94114
www.tangobuilder.com

REGISTERED PROFESSIONAL ENGINEER
IAN AUGUSTA ALEMAN-FERNANDEZ
C 86746
EXP. 03/31/2023
STATE OF CALIFORNIA

REV#	DATE	DESCRIPTION

10315 KENNY LN

CALIFORNIA

STRUCTURAL PLAN VIEWS AND ELEVATIONS

PROJECT NUMBER:

S203

8/1/2022 4:10:25 PM

TENSION LAP SPLICE LENGTHS, Ls (inches)										
BAR SIZE DESIGNATION		LAP CLASS	f'c = 4000 TO 5999 PSI				f'c = 6000 PSI OR GREATER			
			CASE 1		CASE 2		CASE 1		CASE 2	
	Metric		TOP BARS	OTHER BARS	TOP BARS	OTHER BARS	TOP BARS	OTHER BARS	TOP BARS	OTHER BARS
#3	(#10)	B	26	20	38	29	26	20	31	24
#4	(#13)	B	34	26	50	38	28	21	41	32
#5	(#16)	B	43	33	61	47	34	26	51	39
#6	(#19)	B	50	38	73	56	41	32	60	46
#7	(#22)	B	71	55	107	82	58	45	87	67
#8	(#25)	B	82	63	122	94	66	51	100	77
#9	(#29)	B	92	71	137	106	75	58	112	86

LAP SPLICE NOTES:
1. DETERMINE SPLICE LENGTH BASED ON BAR POSITION AS DEFINED:
CASE 1:
BEAMS AND COLUMNS:
- CONCRETE COVER >= db,
- CENTER TO CENTER BAR SPACING >= 2 db AND
- STIRRUPS OR TIES THROUGHOUT Ld NOT LESS THAN CODE MINIMUM.
OTHER MEMBERS:
- CONCRETE COVER >= db, AND
- C.-C. BAR SPACING >= 3 db
CASE 2:
BEAMS AND COLUMNS:
- CONCRETE COVER < db, AND
- CENTER TO CENTER BAR SPACING < 2 db
OTHER MEMBERS:
- CONCRETE COVER < db, AND
- C.-C. BAR SPACING < 3 db
2. "TOP BARS" ARE DEFINED AS HORIZONTAL BARS WITH MORE THAN 12" OF FRESH CONCRETE IS CAST IN THE MEMBER BELOW THE REINFORCEMENT.
3. ALL DETAILING SHALL COMPLY WITH THIS SCHEDULE UNLESS SPECIFICALLY DETAILED OTHERWISE ON THE DRAWINGS.
4. SEE DRAWINGS FOR LAP SPLICE CLASSIFICATION. IF NO LAP SPLICE CLASSIFICATION IS SHOWN PROVIDE CLASS "B" SPLICE.
5. THE BAR LAP LENGTHS SHOWN ARE FOR CLASS "B" LAP SPLICES. FOR CLASS "A" SPLICE, DIVIDE THE SPECIFIED CLASS "B" LAP LENGTH BY 1.3.
6. THE LAP SPLICE LENGTHS APPLY TO NORMAL WEIGHT CONCRETE. MULTIPLY THE SPECIFIED LAP LENGTHS BY 1.3 FOR LIGHTWEIGHT CONCRETE.
7. STAGGER ALL SPLICES WHEREVER POSSIBLE. WHERE CLASS "A" SPLICE IS CALLED FOR ON DRAWING, STAGGER AT LEAST 50% OF THE BARS. ELSE PROVIDE CLASS "B" SPLICE.
8. WHEN SPLICING BARS OF DIFFERENT SIZE, THE LAP LENGTH SHALL BE BASED ON THE LARGER OF:
   a. THE SPLICE LENGTH OF THE SMALLER BAR.
   b. THE DEVELOPMENT LENGTH OF THE LARGER BAR
9. LAP SPLICES FOR #14 AND #18 BARS ARE NOT PERMITTED. PROVIDE TYPE 2 MECHANICAL SPLICE U.O.N.
10. CONCRETE WALLS:
   a. LAP SPLICES IN HORIZONTAL REINFORCEMENT SHALL BE STAGGERED 12" MIN
   b. WITH TWO CURTAINS OF REINFORCEMENT, SPLICES SHALL BE STAGGERED 12" MIN APART AT ALTERNATING BARS, 50% AT THE HIGHER LOCATION AND 50% AT THE LOWER LOCATION.
11. BUNDLED BAR SPLICES:
   a. ENTIRE BUNDLED BARS SHALL NOT BE LAP SPLICED. STAGGER INDIVIDUAL BAR SPLICES.
   b. INDIVIDUAL BAR SPLICES WITHIN THE BUNDLE SHALL NOT OVERLAP EACH OTHER.
   c. MULTIPLY LAP LENGTH BY 1.2 AT THREE BAR BUNDLES
   d. MULTIPLY LAP LENGTH BY 1.33 AT FOUR BAR BUNDLES
12. THE LAP SPLICE LENGTHS APPLY TO UNCOATED REINFORCEMENT.
13. THE TABLE APPLIES FOR 60 ksi REBAR. FOR 80 ksi REBAR INCREASE ALL LENGTHS BY 33%.

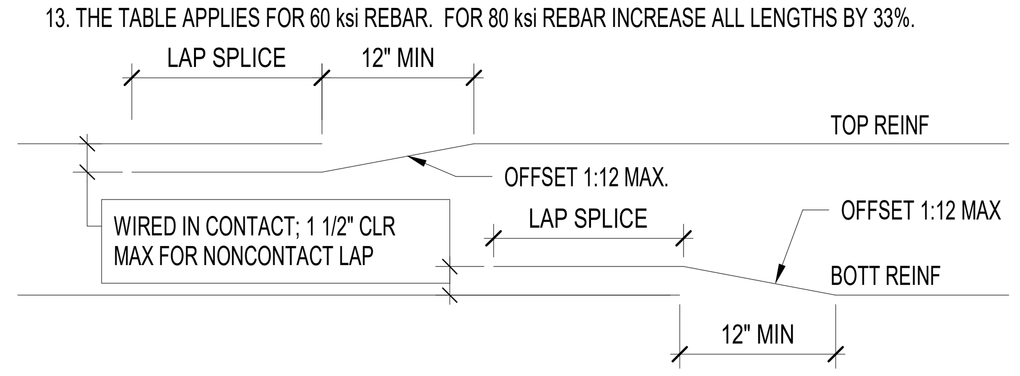

BEAM SPLICE DETAIL

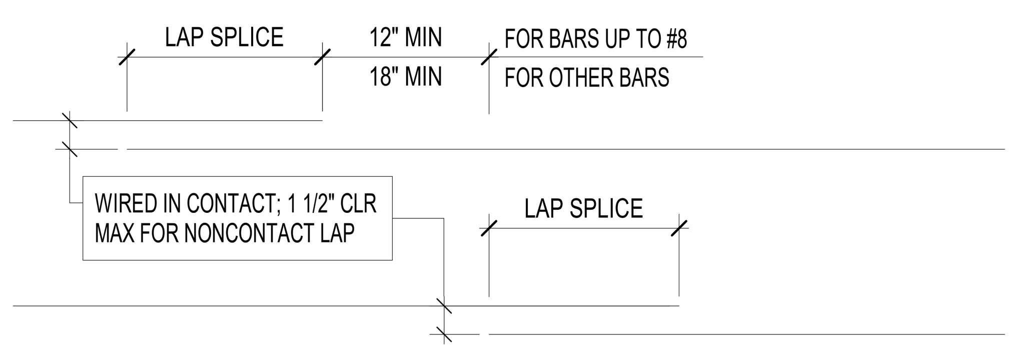

STAGGERED WALL OR SLAB SPLICE DETAIL

5 S400 TENSION LAP SPLICE LENGTH (Ls) SCHEDULE

BAR DEVELOPMENT LENGTH COMPRESSION (Ldc) SCHEDULE (INCHES)				
MEMBER TYPE	BAR SIZE	Fc'=4000 psi	Fc'=5000 psi	Fc'=6000 psi
ALL MEMBERS U.N.O.	#3	8	8	8
	#4	10	9	9
	#5	12	12	12
	#6	15	14	14
	#7	17	16	16
	#8	19	18	18
	#9	22	21	21
	#10	25	23	23
	#11	27	26	26
	#14	33	31	31
	#18	43	41	41

NOTES :
1. REFERENCE CODE ACI 318-14.
2. THE ABOVE BAR DEVELOPMENT LENGTHS APPLY TO NORMAL WEIGHT CONCRETE. DIVIDE 0.75 FOR LIGHTWEIGHT CONCRETE.
3. THE ABOVE BAR DEVELOPMENT LENGTHS ARE FOR REBARS Fy = 60 KSI. FOR OTHER REBAR GRADES, MULTIPLY THE SPECIFIED DEVELOPMENT LENGTHS BY Fy / 60 KSI
4. THE ABOVE BAR DEVELOPMENT LENGTHS ARE CALCULATED USING THE 28-DAY CONCRETE COMPRESSIVE STRENGTH BASED ON CYLINDER SPECIMEN.

3 S400 BAR DEVELOPMENT LENGTH COMPRESSION (Ldc) SCHEDULE

12" = 1'-0"

TENSION DEVELOPMENT LENGTHS, Ld (inches)									
BAR SIZE DESIGNATION		f'c = 4000 TO 5999 PSI				f'c = 6000 PSI OR GREATER			
		CASE 1		CASE 2		CASE 1		CASE 2	
	METRIC	TOP BARS	OTHER BARS	TOP BARS	OTHER BARS	TOP BARS	OTHER BARS	TOP BARS	OTHER BARS
#3	(#10)	20	15	29	22	20	15	23	18
#4	(#13)	26	20	38	29	21	16	31	24
#5	(#16)	33	25	47	36	26	20	39	30
#6	(#19)	38	29	56	43	31	24	46	35
#7	(#22)	55	42	82	63	44	34	66	51
#8	(#25)	62	48	94	72	51	39	77	59
#9	(#29)	70	54	105	81	57	44	86	66

BAR DEVELOPMENT NOTES:
1. DETERMINE REINFORCEMENT DEVELOPMENT LENGTH BASED ON BAR POSITION AS DEFINED:
CASE 1:
BEAMS AND COLUMNS:
- CONCRETE COVER >= db,
- CENTER TO CENTER BAR SPACING >= 2 db AND
- STIRRUPS OR TIES THROUGHOUT Ld NOT LESS THAN CODE MINIMUM.
OTHER MEMBERS:
- CONCRETE COVER >= db, AND
- C.-C. BAR SPACING >= 3 db
CASE 2:
BEAMS AND COLUMNS:
- CONCRETE COVER < db, AND
- CENTER TO CENTER BAR SPACING < 2 db
OTHER MEMBERS:
- CONCRETE COVER < db, AND
- C.-C. BAR SPACING < 3 db
2. "TOP BARS" ARE DEFINED AS HORIZONTAL BARS WITH MORE THAN 12" OF FRESH CONCRETE IS CAST IN THE MEMBER BELOW THE REINFORCEMENT.
3. ALL DETAILING SHALL COMPLY WITH THIS SCHEDULE UNLESS SPECIFICALLY DETAILED OTHERWISE ON THE DRAWINGS.
4. THE BAR DEVELOPMENT LENGTHS APPLY TO NORMAL WEIGHT CONCRETE. MULTIPLY THE SPECIFIED DEVELOPMENT LENGTHS BY 1.3 FOR LIGHTWEIGHT CONCRETE.
5. A STANDARD HOOK SHALL BE PROVIDED WHERE Ld IS UNATTAINABLE DUE TO SPACE RESTRICTIONS (REFER TO SCHEDULE FOR HOOKED BAR DEVELOPMENT LENGTH Ldh)
6. THE BAR DEVELOPMENT LENGTHS APPLY TO UNCOATED REINFORCEMENT.
7. THE TABLE APPLIES FOR 60 ksi REBAR. FOR 80 ksi REBAR INCREASE ALL LENGTHS BY 33%.

4 S400 BAR DEVELOPMENT LENGTH (Ld) SCHEDULE

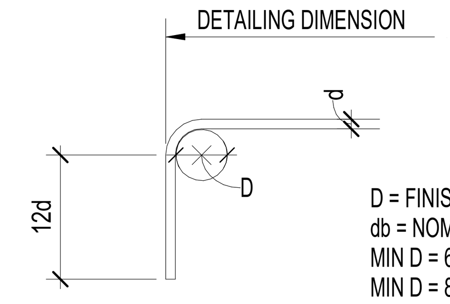

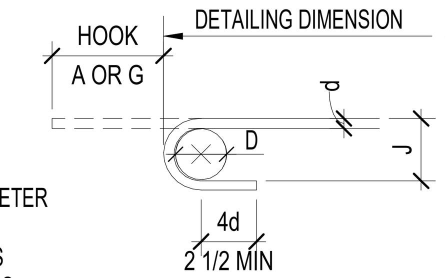

D = FINISHED INSIDE BEND DIAMETER
db = NOMINAL BAR DIAMETER
MIN D = 6d FOR #3 THRU #8 BARS
MIN D = 8d FOR #9 THRU #11 BARS
MIN D = 10d FOR #14 AND #18 BARS

STANDARD HOOK DETAILS

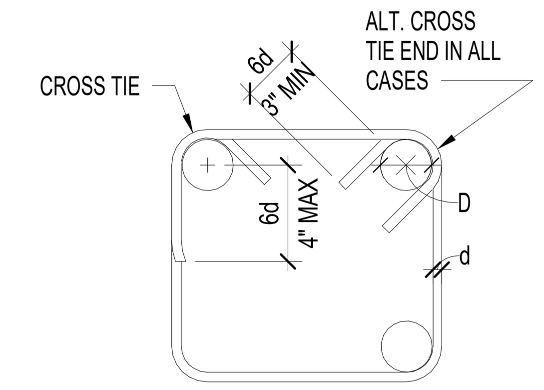

SPANDREL & BEAM
SUPPLEMENTARY TIE

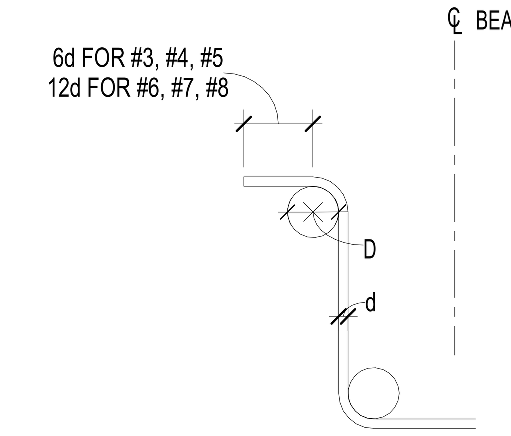

BEAM & JOIST
STIRRUP

END HOOKS					
BAR SIZE		D	180 HOOKS		90 HOOKS
	Metric		A or G	J	A or G
#3	(#10)	2 1/4"	5"	3"	6"
#4	(#13)	3"	6"	4"	8"
#5	(#16)	3 3/4"	7"	5"	10"
#6	(#19)	4 1/2"	8"	6"	1' - 0"
#7	(#22)	5 1/2"	10"	7"	1' - 2"
#8	(#25)	6"	11"	8"	1' - 4"

STIRRUP HOOKS					
BAR SIZE		D	135 SEISMIC HOOKS		90 HOOKS
	Metric		A or G	H*	A or G
#3	(#10)	2 1/4"	4 1/4"	3"	4"
#4	(#13)	3"	4 1/2"	3"	4 1/2"
#5	(#16)	3 3/4"	5 1/2"	3 3/4"	6"
#6	(#19)	4 1/2"	8"	4 1/2"	1' - 0"
#7	(#22)	5 1/2"	9"	5 1/4"	1' - 2"
#8	(#25)	6"	10 1/2"	6"	1' - 4"

*H DIMENSION IS APPROXIMATE

1 S400 TYPICAL REINFORCING HOOK DETAIL

HOOKED BAR DEVELOPMENT LENGTH, Ldh (inches)			
BAR SIZE DESIGNATION		f'c = 4000 PSI TO 5999 PSI	f'c = 6000 PSI OR GREATER
	Metric		
#3	(#10)	6	6
#4	(#13)	8	6
#5	(#16)	10	8
#6	(#19)	11	9
#7	(#22)	13	11
#8	(#25)	15	12

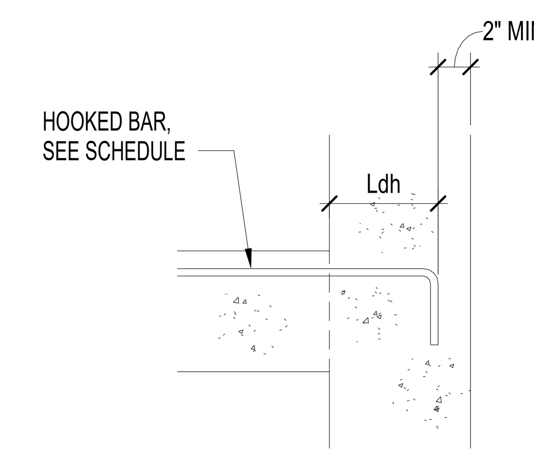

HOOKED BAR DEVELOPMENT NOTES:
1. THE HOOKED BAR DEVELOPMENT LENGTHS APPLY TO NORMAL WEIGHT CONCRETE. FOR LIGHTWEIGHT CONCRETE Ldh SHALL NOT BE LESS THAN 10 db, 7 1/2", AND 1.3 TIMES THE SPECIFIED LENGTH.
2. HOOKED BAR DEVELOPMENT LENGTHS APPLY TO MEMBERS WITH:
   a. SIDE COVER >= 2 1/2 INCHES.
   b. END CONCRETE COVER (90° HOOKS) >= 2 INCHES.
3. FOR 180° HOOKS AT RIGHT ANGLES TO EXPOSED SURFACE, PROVIDE 2 INCHES MINIMUM COVER TO TAIL.
4. THE TABLE APPLIES FOR 60 ksi REBAR. FOR 80 ksi REBAR INCREASE ALL LENGTHS BY 33%.

2 S400 HOOKED BAR DEVELOPMENT LENGTHS (Ldh)

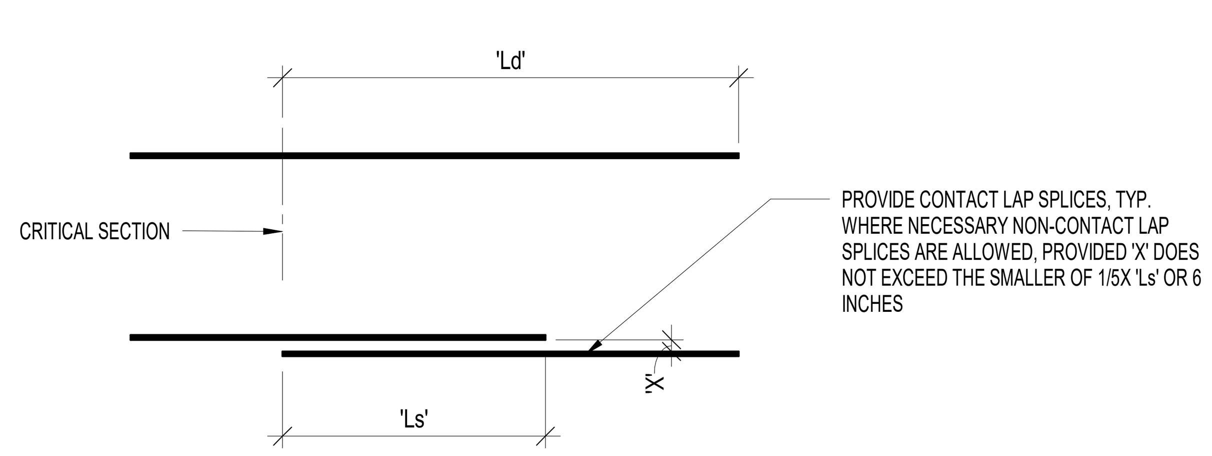

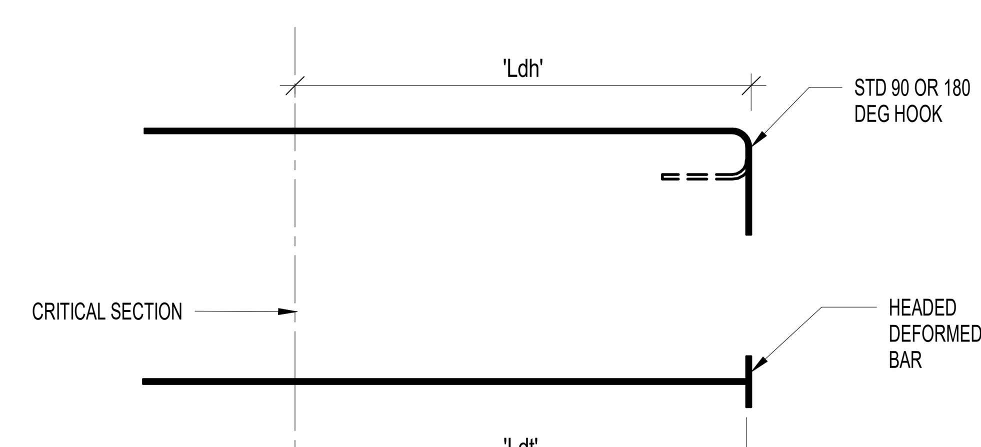

6 S400 TYPICAL REINF DEVELOPMENT LENGTH AND LAP SPLICE TABLE

NOTES:

1. 'Ld': TENSION DEVELOPMENT LENGTH OF REINFORCING BAR.
   'Ls': TENSION (CLASS B) LAP LENGTH OF REINFORCING BAR.
   'Ldh': TENSION DEVELOPMENT LENGTH OF HOOKED REINFORCING BAR.
   'Ldt': TENSION DEVELOPMENT LENGTH OF HEADED DEFORMED REINFORCING BAR.
2. ALL BAR DETAILING SHALL COMPLY WITH THESE SCHEDULES UNLESS NOTED OTHERWISE.
3. TOP BARS ARE DEFINED AS HORIZONTAL REINFORCING BARS WITH MORE THAN 12 INCHES OF CONCRETE CAST BELOW.
4. REFER TO SHEAR WALL GENERAL NOTES FOR ADDITIONAL BAR LAP AND DEVELOPMENT LENGTH REQUIREMENTS.
5. #14 AND #18 BAR SHALL NOT BE LAP SPLICED OR HOOKED.
6. LAP AND DEVELOPMENT LENGTHS REQUIRE A MINIMUM CLEAR BAR SPACING AND CLEAR BAR COVER OF 2X BAR DIAMETERS AND 1X BAR DIAMETER, RESPECTIVELY. AT BEAMS AND COLUMNS CLEAR BAR SPACING MAY BE REDUCED TO 1X BAR DIAMETER.
7. STANDARD HOOKED BARS REQUIRE A MINIMUM SIDE COVER AND END COVER OF 2 1/2 INCHES, AND 2 INCHES, RESPECTIVELY.
8. HEADED DEFORMED BARS REQUIRE A MINIMUM CLEAR BAR SPACING AND CLEAR BAR COVER OF 4X BAR DIAMETERS AND 2X BAR DIAMETERS, RESPECTIVELY.
9. IF THE CLEAR COVER AND SPACING REQUIREMENTS OF ITEMS 6 AND 7 ARE NOT MET, MULTIPLY THE SPLICE AND DEVELOPMENT LENGTHS IN THE SCHEDULES BY 1.5.
10. WHEN BARS OF DIFFERENT SIZE ARE SPLICED, 'Ls' SHALL BE BASED ON THE SMALLER BAR.
11. THE SCHEDULES ARE NOT TO BE USED FOR EPOXY COATED BAR.

FOR PERMIT

08/01/2022
FOR PERMIT

TANGObuilder
2261 Market Street #4004
San Francisco CA, 94114
www.tangobuilder.com

REGISTERED PROFESSIONAL ENGINEER
JUAN BAUTISTA ALEMAN-HERNANDEZ
C 86746
EXP. 03/31/2023
CIVIL
STATE OF CALIFORNIA

REV# DATE DESCRIPTION

10315 KENNY LN
CALIFORNIA

STRUCTURAL TYPICAL REINFORCEMENT DETAILS

PROJECT NUMBER:

S400

8/1/2022 4:10:28 PM

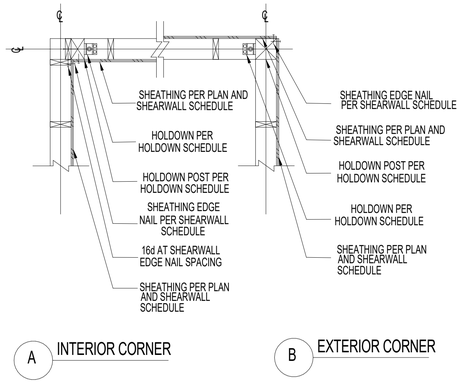

9 S401 TYPICAL HOLDOWN LOCATION

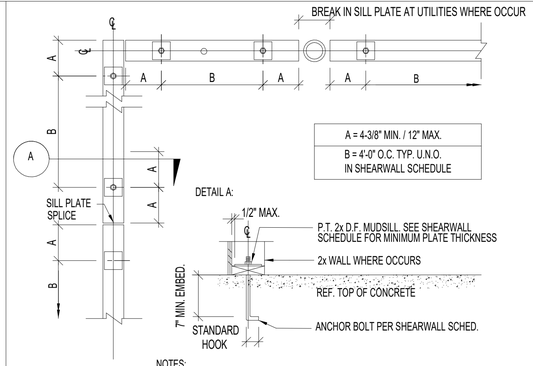

NOTES:

A. 5/8" DIA. A307 (OR EQ.) x 10" LONG A.B. w/ 3" x 3" x 0.25" PL. WASHER. HOLE IN PLATE SHALL BE 1/16" LARGER THAN BOLT DIA., STD CUT WASHER REQ. AT SLOTTED PLATE WASHER.

B. SPACING SHALL BE 4'-0" ON CENTER, MAXIMUM. SEE SHEARWALL SCHEDULE FOR REDUCED SPACING AND 3x SILL REQUIREMENTS. PROVIDE MINIMUM OF TWO A.B. PER MUDSILL PIECE AS DETAILED ABV.

C. VERIFY EXACT LOCATION OF FRAMING BEFORE ANCHOR BOLT PLACEMENT.

6 S401 TYPICAL ANCHOR BOLT LOCATION

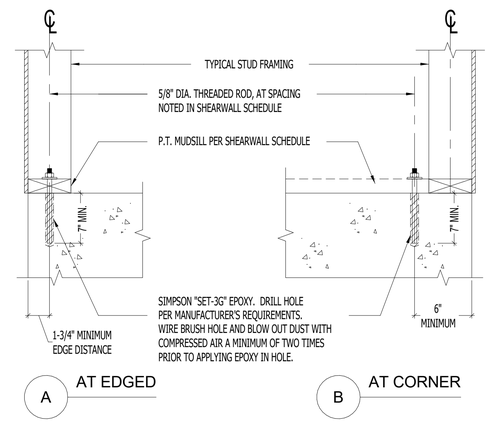

4 S401 "RETROFIT" ANCHOR BOLT DETAILS

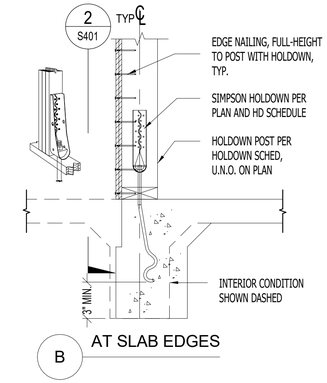

1 S401 TYPICAL HOLDOWN ANCHOR

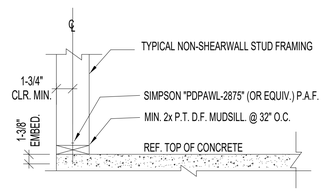

NOTE:

1. SHOT PIN ALTERNATE: AT INTERIOR WALLS, POWDER ACTUATED FASTENERS (SHOT PINS) MAY BE USED TO ANCHOR MUDSILL TO THE FOUNDATION AT NON-SHEARWALL LOCATIONS ONLY. PROVIDED THE POWDER ACTUATED FASTENERS ARE INSTALLED PER THE REQUIREMENTS LISTED BELOW:

A. DO NOT INSTALL P.A.F. IN LOCATIONS WHERE BEARING, SHEARWALLS OR BRACED WALLS ARE NOTED ON THE PLANS.
B. SIMPSON P.A.F. SHALL BE GALVANIZED AND INSTALLED PER I.C.C. REPORT ESR-2138
C. MIN. EMBED. OF FASTENER IS ACHIEVED WHEN THE WASHER IS FULLY BRNG ON THE PLATE.
D. FASTENERS MUST NOT BE DRIVEN UNTIL CONCRETE HAS REACHED A MINIMUM COMPRESSIVE STRENGTH OF 2000 psi.
E. P.A.F. SHALL BE INSTALLED AT 32" O.C. EACH PIECE OF PLATE SHALL HAVE A MIN. OF TWO FASTENERS PLACED AT 6" FROM THE ENDS WITH A MIN. SPACING OF 4" BETWEEN P.A.F.

7 S401 SHOT PIN PLACEMENT FOR NON-BEAR. WALL

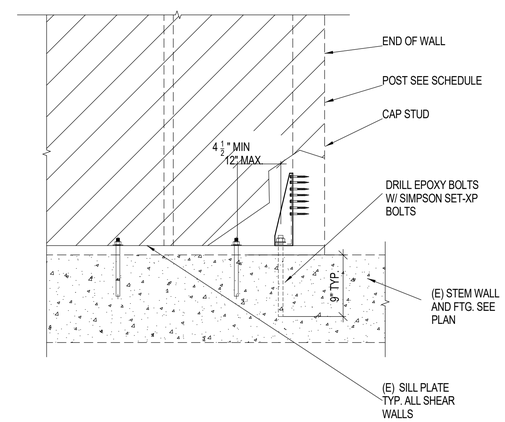

5 S401 RETROFIT HOLD-DOWN ANCHORS

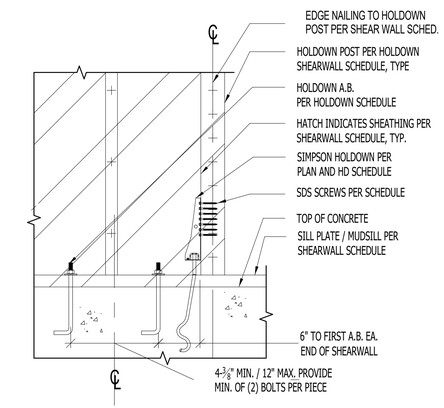

2 S401 TYPICAL HOLDOWN ANCHOR

ISOLATED FOOTING SCHEDULE

FTG SIZE	REINFORCEMENT
3'-8"X3'-8"X24" dp	#5 @ 6" E.W., T & B
4'-6"X3'-6"X18" dp	#5 @ 8" E.W., T & B
1'-6"X1'-6"X18" dp	(3)-#5 E.W., BOTTOM

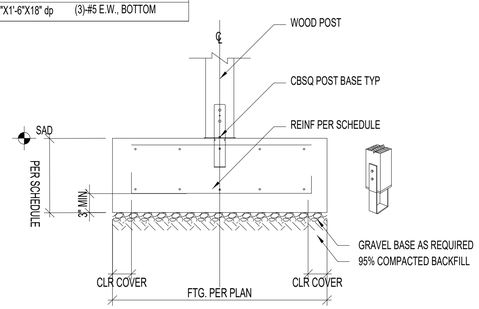

NOTES:

1. REFER TO TYPICAL CONCRETE DETAILS FOR MINIMUM DEVELOPMENT LENGTH OF REBARS

8 S401 POST OVER ISOLATED FOOTING

NOTES FOR MUDSILLS:

1. PLATES AND MUDSILLS SHALL BE BOLTED TO THE FOUNDATION WITH NOT LESS THAN 5/8" DIA. HOT DIPPED GALVANIZED ANCHOR BOLTS WITH 3 x 3 x 1/4" PLATE WASHERS. EMBED ANCHOR BOLTS 7" INTO CONCRETE OR 12" INTO GROUTED MASONRY, AND SPACE NOT MORE THAN 48" APART, U.N.O. THERE SHALL BE A MINIMUM OF TWO BOLTS PER BOARD WITH ONE BOLT LOCATED 12" MAX/5" MIN. OFF EACH END.
2. ALL PLATES AND MUDSILLS ON CONCRETE OR MASONRY SHALL BE PRESSURE-TREATED DOUGLAS FIR (P.T. D.F.)
3. USE ONLY HOT-DIPPED GALVANIZED ANCHOR BOLTS, PLATE WASHERS, NAILS AND OTHER HARDWARE WHEN IN CONTACT WITH P.T. LUMBER, U.N.O. BY LUMBER MFR.

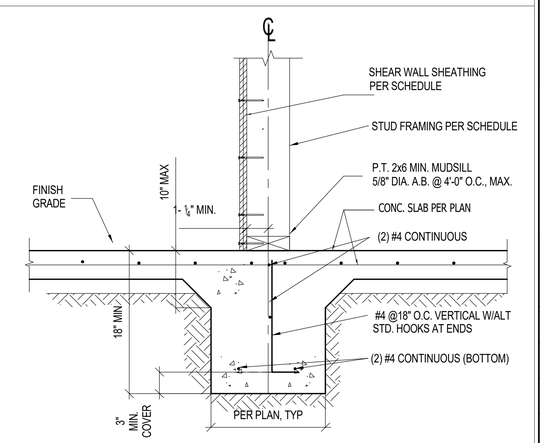

3 S401 NEW STRIP FOUNDATION

FOR PERMIT

08/01/2022
FOR PERMIT

TANGObuilder
2261 Market Street #4004
San Francisco CA, 94114
www.tangobuilder.com

REGISTERED PROFESSIONAL ENGINEER
JAN BAUSTA ALEMAN-FERNANDEZ
C 86746
EXP. 03/31/2023
STATE OF CALIFORNIA

REV#	DATE	DESCRIPTION

10315 KENNY LN

CALIFORNIA

FOUNDATION DETAILS

PROJECT NUMBER:

S401

8/1/2022 4:10:28 PM

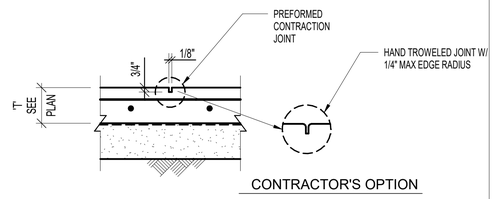

CONTROL JOINT

NOTES:

1. ALL SAW CUT/ TROWELED JOINTS NEED TO BE DONE WITHIN 24 HOURS OF SLAB BEING POURED.
2. CONTROL JOINTS SHALL BE SPACED AT 15' - 0" OC MAXIMUM EACH WAY. THE AREA BOUNDED BY CONTROL JOINTS OR CONSTRUCTION/ CONTROL JOINTS SHALL NOT EXCEED 225 SQ FT WITH ASPECT RATIO OF SLAB PANELS BEING A MAXIMUM OF 1.2 TO 1.

7 S402 TYPICAL SOG CONTROL JOINT

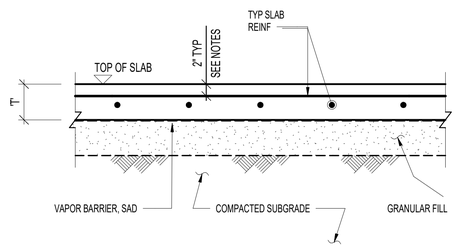

NOTES:
1. SEE PLAN FOR SLAB THICKNESS AND REINFORCING.
2. REINFORCEMENT TO EXTEND TO WITHIN 2 IN OF THE SLAB SIDE EDGE. ALSO REFER TO SLAB EDGE DETAILS.
3. REINFORCING STEEL IS TO BE PLACED WITHIN 2 IN OF THE TOP OF THE SLAB OR UPPER ONE-THIRD OF SLAB THICKNESS, WHICHEVER IS CLOSER TO THE SLAB TOP SURFACE.

4 S402 TYPICAL SOG DETAIL

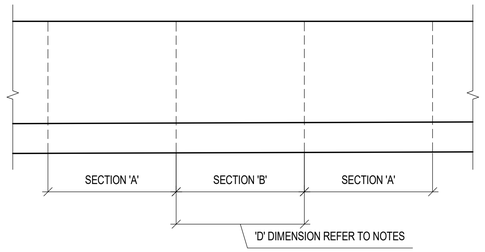

NOTES

1. UNDERPINNING SHALL BE PROVIDED IF THE EXISTING FOUNDATION DEPTH 'D' IS LESS THAN 18" AND THE WIDTH 'W' IS LESS THAN 18".
2. NEW FOUNDATIONS SHALL BE PROVIDED IF THE EXISTING FOUNDATION IS MADE OUT OF UNREINFORCED BRICK AND MORTAR.
3. UNDERPIN IN ALL ALTERNATING SEQUENCE TO ENSURE THE SAFETY OF EXISTING STRUCTURE AT ALL TIMES
4. COMPLETE SECTION "A" BEFORE COMMENCING SECTIONS "B"
5. EXCAVATE EACH SECTION TO THE NEW EXCAVATION LEVEL, HAND CLEAN UNDER AND AROUND THE EXISTING FOOTINGS AND PLACE 2500PSI CONCRETE TO WITHIN 2" FROM THE UNDERSIDE OF THE FOOTING
6. RAM-PACK 2" OF NON-SHRINK GROUT, EMBECO 636 OR IN-P AKT, BETWEEN THE EXISTING FOUNDATION AND THE TOP OF THE UNDERPINNING CONCRETE. ALLOW 24 HOURS FOR THE CONCRETE TO GAIN STRENGTH
7. ALLOW 24 HOURS BETWEEN THE INSTALLATION OF THE GROUT PRIOR TO EXCAVATION OF THE ADJACENT SECTIONS
8. UNDERPINNING SHOWN IS FOR ASSUMED EXISTING CONDITIONS. REPORT ANY VARIATIONS TO THE ENGINEER BEFORE PROCEEDING WITH THE WORK
9. PREVENT LOSS OF MATERIAL FROM UNDERNEATH THE EXISTING FOUNDATION AND FLOOR SLABS
10. D" DIMENSION IS TO BE 3'-0" UNLESS NOTED OTHERWISE ON THE FOUNDATION DRAWINGS

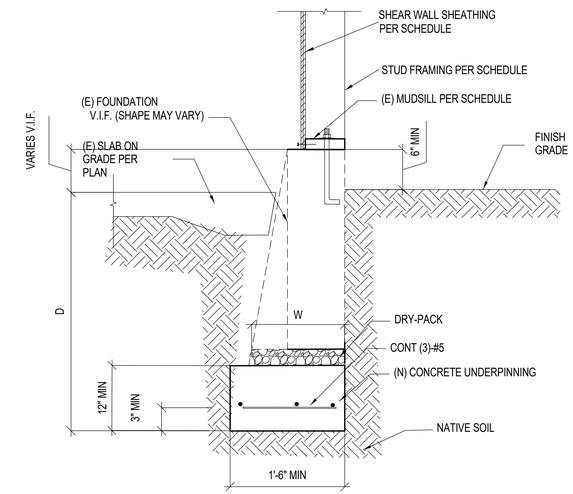

1 S402 UNDERPINNING FOR WALL FOOTING WHEN REQUIRED

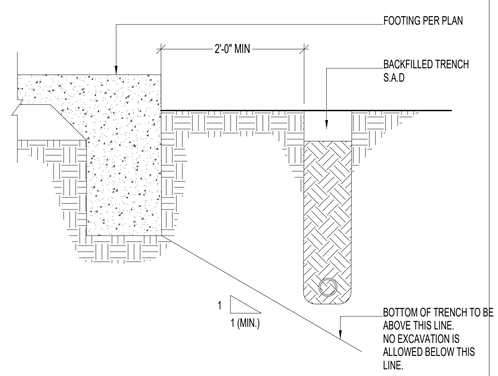

8 S402 PIPE PARALLEL TO FOOTING

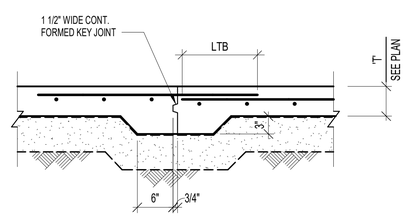

5 S402 TYPICAL SOG C.J. DETAIL

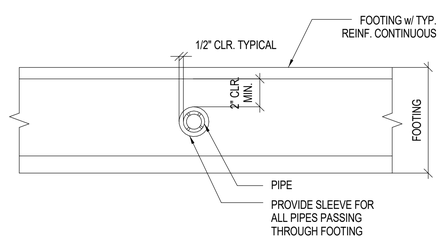

6 S402 PIPE THROUGH FTG OPTION A

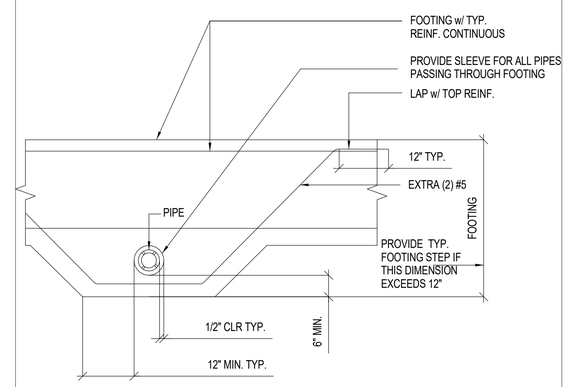

3 S402 PIPE THROUGH FTG OPTION B

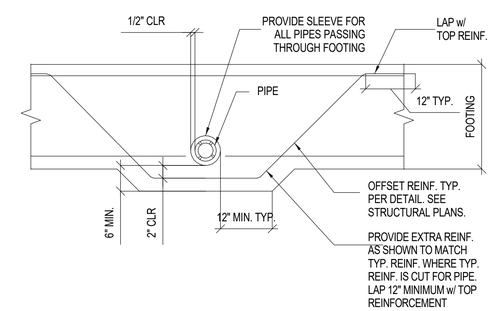

2 S402 PIPE THROUGH FTG OPTION C

FOR PERMIT

08/01/2022
FOR PERMIT

TANGObuilder
2261 Market Street #4004
San Francisco CA, 94114
www.tangobuilder.com

REGISTERED PROFESSIONAL ENGINEER
JAN BAUSTA ALEMAN-FERNANDEZ
C 86746
EXP. 03/31/2023
STATE OF CALIFORNIA

REV#	DATE	DESCRIPTION

10315 KENNY LN

CALIFORNIA

FOUNDATION DETAILS

PROJECT NUMBER:

S402

8/1/2022 4:10:29 PM

BOLTED HOLDOWN SCHEDULE				
ANCHOR	POST CONNECTORS	HOLDOWN ANCHOR	MIN. POST	ALLOWABLE LOAD
HDU2	(6) SDS25212 SCREWS	SSTB24 OR S85/8X24	(2) 2X	2940 LBS
HDU4	(10) SDS25212 SCREWS	SSTB24 OR S85/8X24	(2) 2X	3815 LBS
HDU5	(14) SDS25212 SCREWS	SSTB24 OR S85/8X24	(2) 2X	5645 LBS

8 S601 HOLD-DOWN SCHEDULE

SHEARWALL DESIGNATION:	SW2	SW3	SW4-(BOTH SIDES)	SW6
APA RATED SHEATHING:	15/32" STRUC PLY	15/32" STRUC PLY	15/32" STRUC PLY	15/32" STRUC PLY
10d EDGE NAIL (0.131 DIA):	10d @ 2" O.C.	10d @ 3" O.C.	10d @ 4" O.C.	10d @ 6" O.C.
10d FIELD NAIL (0.131 DIA.):	10d @ 12" O.C.	10d @ 12" O.C.	10d @ 12" O.C.	10d @ 12" O.C.
FRAMING MEMBER AT ADJOINING PANEL EDGES:	SINGLE 3x	SINGLE 3x	SINGLE 3x	SINGLE 3x
SILL CONN. (BEAM/BLKG): 16d NAIL (0.148 DIA.):	16d @ 6" O.C.	16d @ 6" O.C.	16d @ 6" O.C.	16d @ 6" O.C.
SILL CONNECTION (RIM): 16d NAIL (0.148 DIA.):	16d @ 6" O.C.	16d @ 6" O.C.	16d @ 6" O.C.	16d @ 6" O.C.
3/4" A.B. W/ 2x MUDSILL:	@ 16" O.C. MAX	@ 16" O.C. MAX	@ 32" O.C. MAX	@ 32" O.C. MAX
TOP CONNECTION - "A35"	@ 30" O.C. MAX	@ 30" O.C. MAX	@ 30" O.C. MAX	@ 30" O.C. MAX

5 S601 SHEAR WALL SCHEDULE

NOTES

1. APA RATED SHEATHING SHALL BE 4'-0" x 8'-0" MIN. EXPECT AT BOUNDARIES OR AT CHANGES IN FRAMING WHERE A 16" MINIMUM WIDTH IS ALLOWED. ALL PANEL EDGES AND BOUNDARIES SHALL BE NAILED TO 2X FRAMING U.N.O.
   A. PLYWOOD AND OSB SHALL BE TYPE CDX GRADE OR BETTER (EXCEPT WHERE STRUCTURAL 1 GRADE IS NOTED).
   B. STR. 1 = STRUCTURAL 1 GRADE PLYWOOD OR O.S.B.
2. ALL NAILS SHALL HAVE MINIMUM SHANK DIAMETER AS SPECIFIED IN SCHED.
   A. GALVANIZED NAILS SHALL BE HOT DIPPED OR TUMBLED.
   B. ALL FASTENERS THAT ARE INSTALLED INTO OR IN CONTACT WITH PRESSURE TREADED LUMBER ARE TO BE HOT-DIPPED GALVANIZED
3. WHEN FASTENERS ARE SPACED LESS THEN 4" ON CENTER, NAILING AT PANEL EDGES SHOULD BE STAGGERED PER DETAIL
4. PREDRILL SILL CONNECTIONS WHERE NEEDED TO AVOID WOOD SPLITTING. USE DRILL BIT SIZE = 0.75 x NAIL (OR SCREW) DIAMETER.
5. ALL ANCHOR BOLTS MUST BE INSTALLED WITH 3"x3"x0.229" GALVANIZED PLATE WASHERS PER THE CURRENT CBC.
6. INSTALL DBL 2x POST MIN. AT END OF SHEARWALLS. FOR POST REQUIREMENTS AT HOLDOWNS.

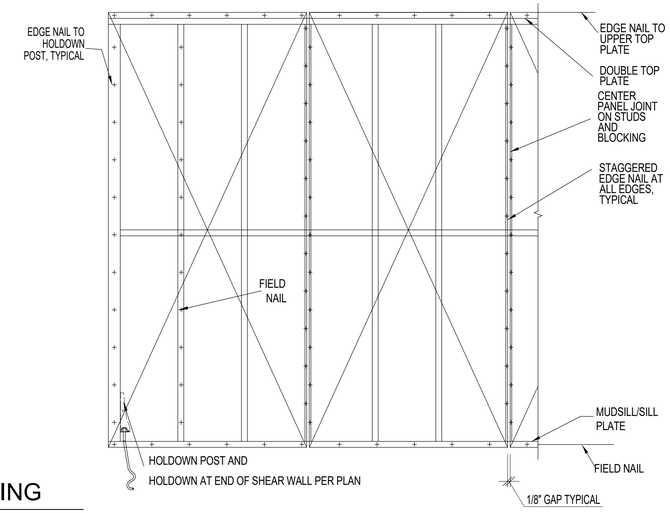

1 S601 TYPICAL SHEAR WALL FRAMING

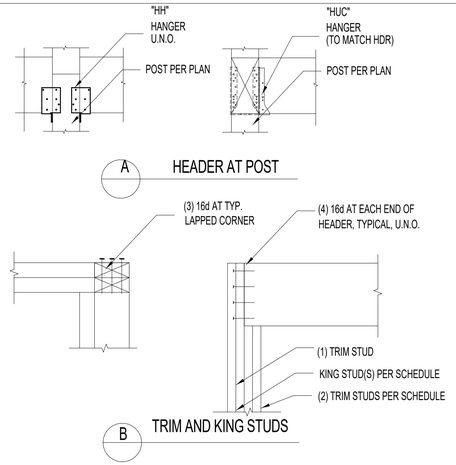

9 S601 TYPICAL HEADER CONNECTIONS

HEADER SCHEDULE - TYP. U.N.O. ON PLAN						
MAX. ROUGH OPENING		3'-6"	4'-6"	5'-6"	6'-6"	8'-6"
BEARING (ROOF)	2x4 WALL	4x6 D.F. #2	4x8 D.F. #2	4x10 D.F. #2	4x10 D.F. #2	3.5 x 9.5 LVL
	2x6 WALL	6x6 D.F. #1	6x6 D.F. #1	6x8 D.F. #1	6x8 D.F. #1	6x10 D.F. #1
BEARING (FLOOR)	2x4 WALL	4x8 D.F. #2	4x10 D.F. #2	4x10 D.F. #2	3.5 x 9.5 LVL	3.5 x 9.5 LVL
	2x6 WALL	6x6 D.F. #1	6x8 D.F. #1	6x10 D.F. #1	6x10 D.F. #1	5.25 x 9.5 LVL
NON- BRG WALLS	2x4 WALL	4x4 D.F. #2	4x4 D.F. #2	4x4 D.F. #2	4x6 D.F. #2	4x8 D.F. #2
	2x6 WALL	4x6 (FLAT)	4x6 (FLAT)	4x6 (FLAT)	6x6 D.F. #1	6x6 D.F. #1

KING STUD SCHEDULE - TYP. U.N.O. ON PLAN							
MAX. ROUGH OPENING			3'-6"	4'-6"	5'-6"	6'-6"	8'-6"
HEIGHT MAX. PLATE	8'-1"	2x4 WALL	(1) - 2x4	(2) - 2x4	(2) - 2x4	(2) - 2x4	(2) - 2x4
		2x6 WALL	(1) - 2x6	(1) - 2x6	(1) - 2x6	(1) - 2x6	(2) - 2x6
	9'-1"	2x4 WALL	(2) - 2x4	(2) - 2x4	(2) - 2x4	(3) - 2x4	(3) - 2x4
		2x6 WALL	(1) - 2x6	(1) - 2x6	(1) - 2x6	(1) - 2x6	(2) - 2x6
	10'-1"	2x4 WALL	(2) - 2x4	(2) - 2x4	(3) - 2x4	(4) - 2x4	(5) - 2x4
		2x6 WALL	(1) - 2x6	(1) - 2x6	(1) - 2x6	(2) - 2x6	(2) - 2x6

B HEADER SCHEDULE-TYPICAL U.N.O. ON THE PLAN

6 S601 TYPICAL OPENING SCHEDULE

NOTES

1. ALL ROUGH OPENINGS 6'-0" AND GREATER SHALL HAVE DOUBLE 2x TRIM STUDS.
2. TRIM STUDS SHALL BE CONTINUOUS FROM BOTTOM OF HEADER TO THE TOP OF THE SILL PLATE BELOW.
3. STACK ALL KING AND TRIM STUDS FROM LEVEL AT WHICH THEY OCCUR CONTINUOUS DOWN TO SILL PLATE AT FOUNDATION LEVEL. PROVIDE SOLID FILLER IN JOIST SPACE.
4. USE 1-3/4" LSL FILLER OF MATCHING DEPTH TO SHIM TO WALL WIDTH.
5. ADD INSULATION TO HEADERS WHICH DO NOT MATCH WALL THICKNESS

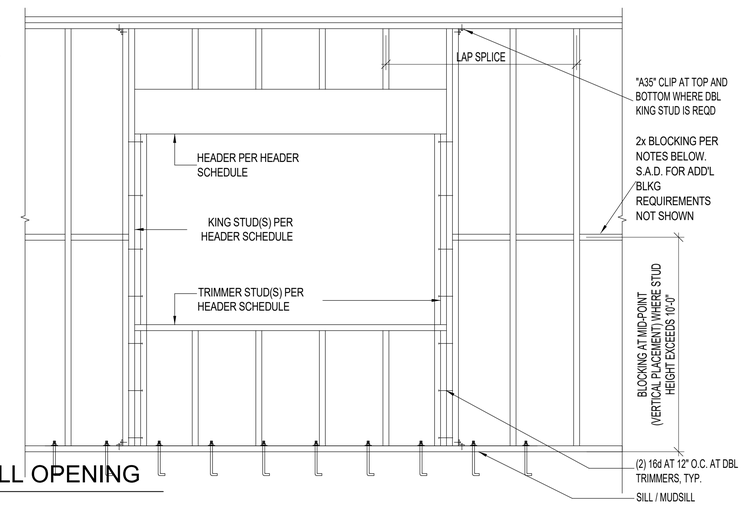

2 S601 TYPICAL FRAMED WALL OPENING

TYP. STUD FRAMING

SHEATHING PER SHEARWALL SCHEDULE

EDGE NAIL PER SHEARWALL SCHEDULE

16d AT EDGE NAIL SPACING PER SHEARWALL SCHED.

3x MIN. STUD WHERE EDGE NAILING IS ON BOTH SIDES

16d AT EDGE NAILING SPACING PER SHEARWALL SCHEDULE

EDGE NAIL PER SHEARWALL SCHEDULE

16d AT EDGE NAIL SPACING PER SHEARWALL SCHED.

TYP. STUD FRAMING

NOTES

1. SEE SHEARWALL SCHEDULE FOR REQUIRED SHEATHING, NAILING, AND SILL CONNECTIONS.
2. FOR LOCATION OF TIEDOWNS AND TD POSTS, SEE TYPICAL DETAILS

10 S601 TYPICAL INTERSECTION PLAN

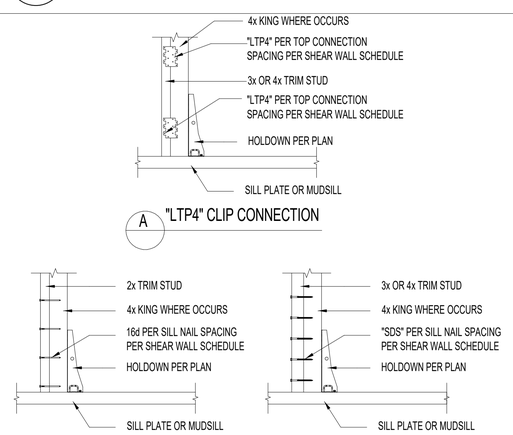

7 S601 TRIM STUD TO HOLDOWN POST

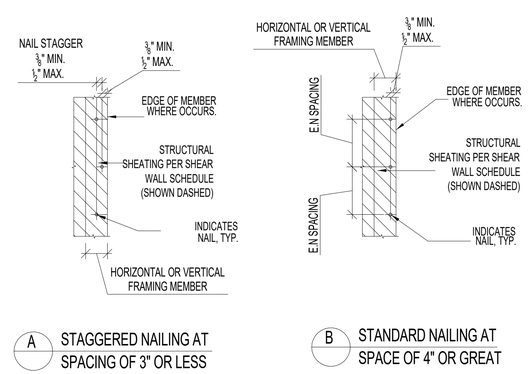

4 S601 NAILING AT SHEAR WALL

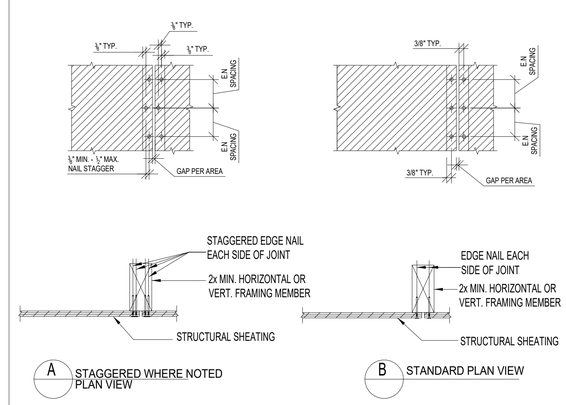

3 S601 SHEAR WALL SHEATHING

FOR PERMIT

08/01/2022
FOR PERMIT

TANGObuilder
2261 Market Street #4004
San Francisco CA, 94114
www.tangobuilder.com

REGISTERED PROFESSIONAL ENGINEER
ALEXANDER FERNANDEZ
C 86746
EXP. 03/31/2023
STATE OF CALIFORNIA

REV#	DATE	DESCRIPTION

10315 KENNY LN

CALIFORNIA

LIGHT-FRAMING DETAILS

PROJECT NUMBER:

S601

8/1/2022 4:10:29 PM

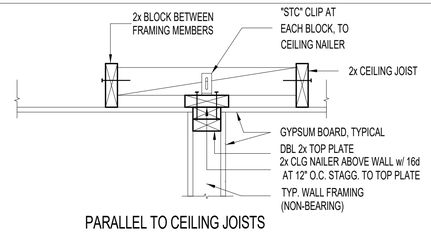

PARALLEL TO CEILING JOISTS

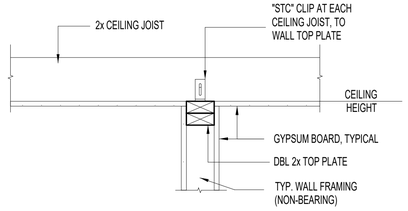

PERPENDICULAR TO CEILING JOISTS

9 / S602 INTERIOR WALL SECTION AT FLOOR

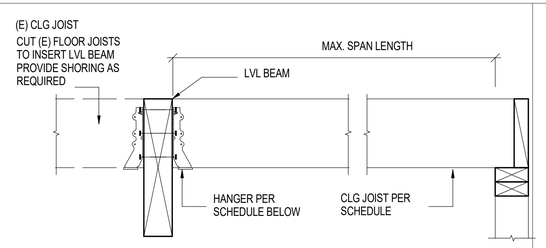

SPAN (MAX.)	LEDGER TO STUD	HANGER
8'-0"	(2) 16d	"LUS24"
12'-0"	(3) 16d	"LUS26"
15'-0"	(4) 16d	"LUS26"
18'-0"	(4) 16d	"LUS28"
20'-0"	(4) 16d	"LU210"

NOTE:

1. PROVIDE 2x FULL-DEPTH SOLID BLOCK, TYPICAL, AT MID-LENGTH OF JOISTS OVER 12'-0" LONG

6 / S602 CEILING JOIST AT LVL BEAM AND WALL

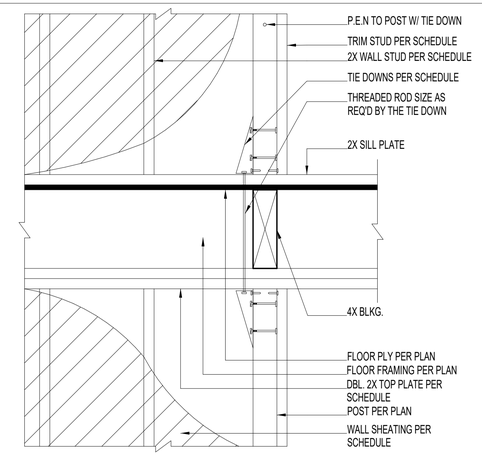

3 / S602 HOLDOWN AT FLOOR- OPTION A

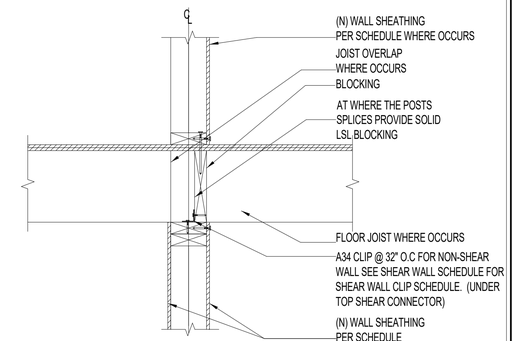

JOIST PERP TO WALL

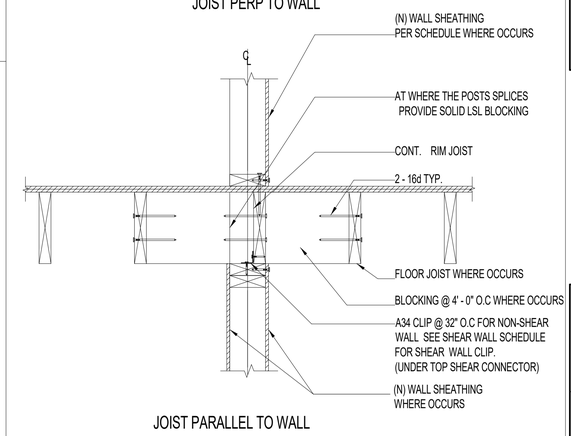

JOIST PARALLEL TO WALL

1 / S602 TYPICAL WALL TO JOIST

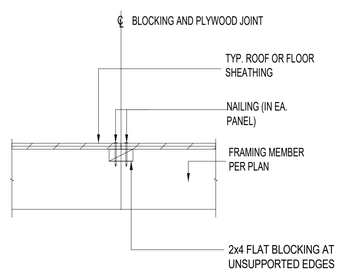

10 / S602 BLOCKED + NAILED PLYWOOD DIAPHRAGM

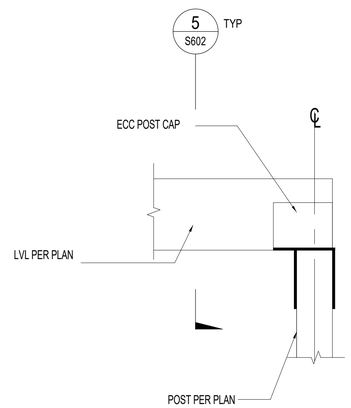

7 / S602 LVL CONNECTION TO POST1

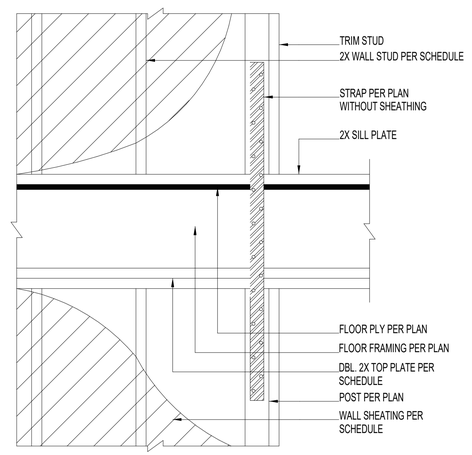

4 / S602 HOLDOWN AT FLOOR-OPTION B

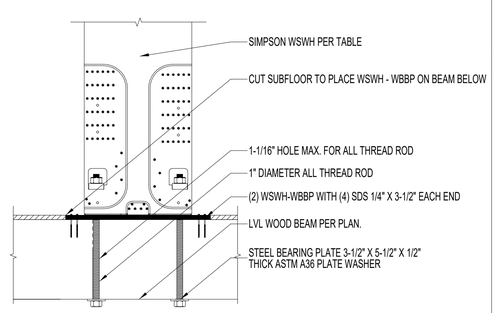

ELEVATION

8 / S602 SWSH12X9 OVER PSL BEAM

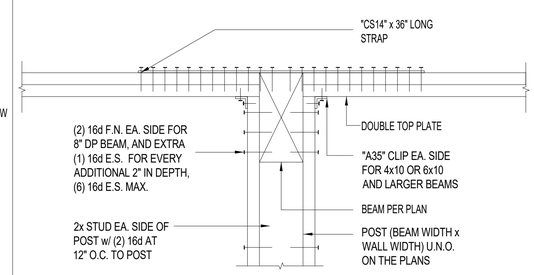

5 / S602 TYPICAL BEAM SUPPORT IN WALL - DROPPED BEAM

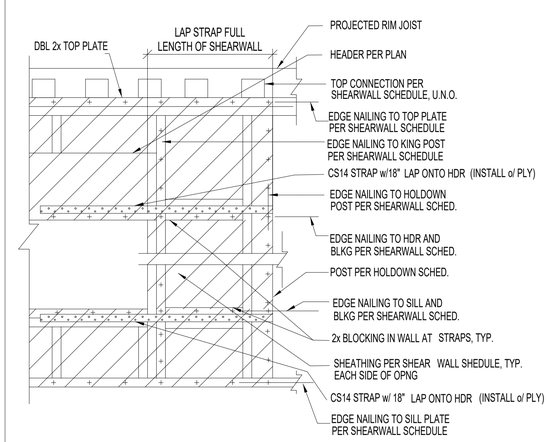

2 / S602 TYPICAL SHEAR WALL OPENING

FOR PERMIT

08/01/2022
FOR PERMIT

TANGObuilder
2261 Market Street #4004
San Francisco CA, 94114
www.tangobuilder.com

REGISTERED PROFESSIONAL ENGINEER
ALEN BAJISTA ALEMAN FERNANDEZ
C 86746
EXP. 03/31/2023
STATE OF CALIFORNIA

REV#	DATE	DESCRIPTION

10315 KENNY LN

CALIFORNIA

LIGHT-FRAMING DETAILS

PROJECT NUMBER:

S602

8/1/2022 4:10:30 PM

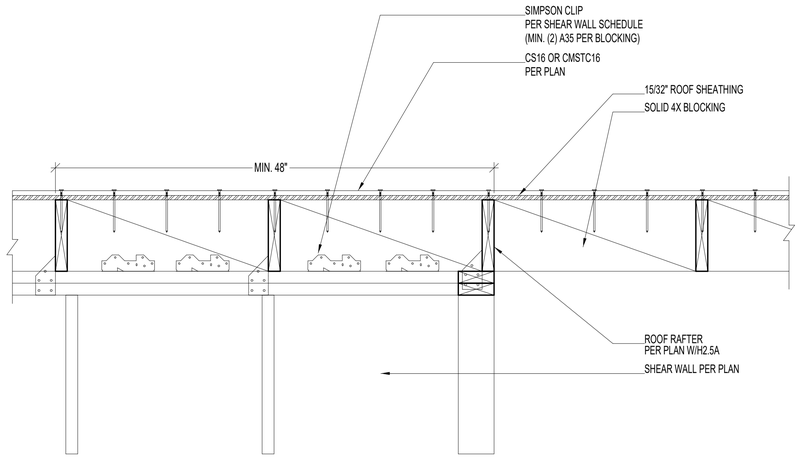

7 S603 ROOF DIAPHRAGM STRAP

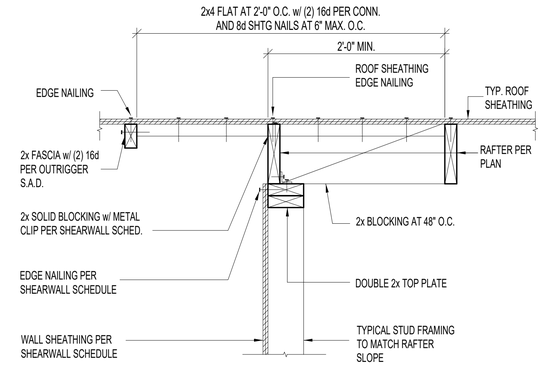

4 S603 RAFTER PARALLEL TO EXTERIOR WALL

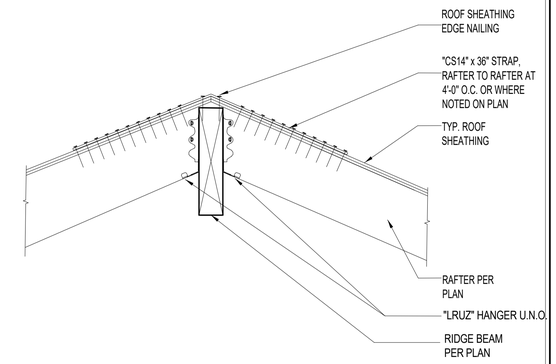

1 S603 ROOF JOIST TO RAFTER

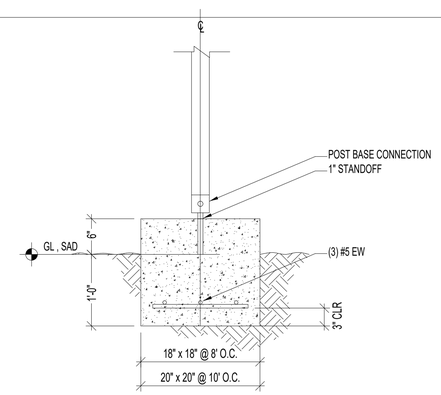

5 S603 TYPICAL POST FOOTING

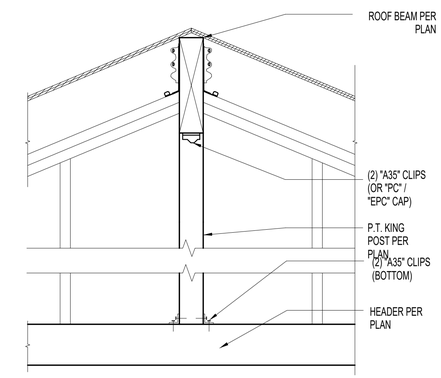

2 S603 RAFTER TO KING POST

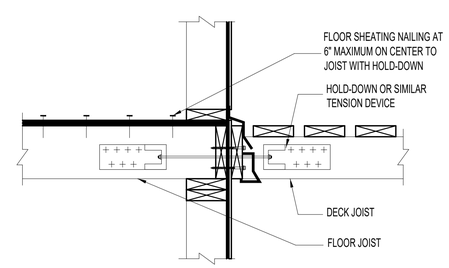

6 S603 TYPICAL DECK TO FLOOR CONNECTION

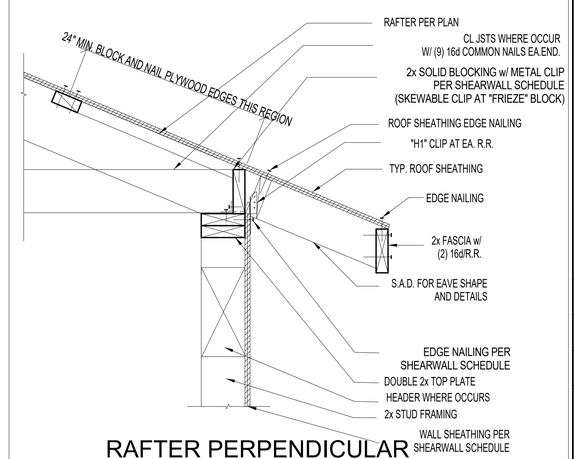

3 S603 RAFTER PERPENDICULAR TO EXT. WALL

FOR PERMIT

08/01/2022
FOR PERMIT

TANGObuilder
2261 Market Street #4004
San Francisco CA, 94114
www.tangobuilder.com

REGISTERED PROFESSIONAL ENGINEER
ALEXANDER FERNANDEZ
C 86746
EXP. 03/31/2023
STATE OF CALIFORNIA

REV#	DATE	DESCRIPTION

10315 KENNY LN

CALIFORNIA

LIGHT-FRAMING DETAILS

PROJECT NUMBER:

S603

8/1/2022 4:10:30 PM

DRILLED HOLE SCHEDULE			
	TOP PLATE SIZE	MAX HOLE SIZE SIZE WITHOUT TENSION STRAPS	MAX. HOLE * SIZE WITH TENSION STRAPS
EXT. OR INT. BRG WALL OR SHEAR WALL	2X4	7/8" DIA.	2-1/4" DIA.
	2X6	2-7/8" DIA.	4-1/4" DIA.
INT. NON-STRUCTURAL PARTITION	2X4	2-1/8" DIA.	2-1/4" DIA.
	2X6	4-1/8" DIA.	4-1/4" DIA.

6 S604 DRILLED HOLE SCHEDULE

NOTCH/ BORE % OF STUD	2X4 STUDS	2X6 STUDS
25%	7/8"	1.3/8"
40%	1.3/6"	2.1/8"
60%	2"	3.1/4"

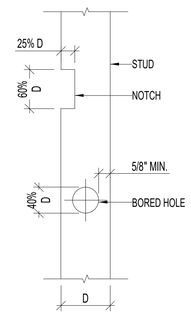

STUD WALLS: STRUCTURAL EXTERIOR BEARING AND EXTERIOR WALLS

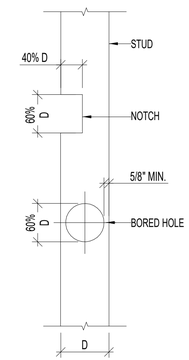

STUD WALLS: NON-STRUCTURAL

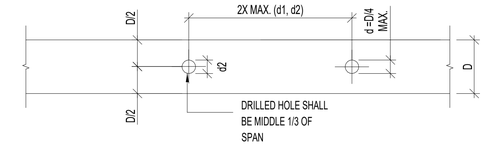

JOIST AND RAFTER

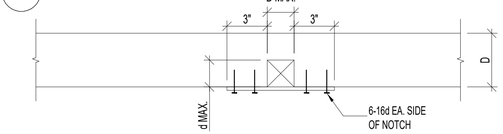

WALL THICKNESS	d (in)
X 4	1.5
X 6	2.0
X 8	3.0

1.NOTCHING OF JOISTS, RAFTERS & BEAMS IS NOT ALLOWED

2. FOR DOUBLE PLATES, WHERE DEPTH OF NOTCH IS GREATER THAN 1" PROVIDE 0.058" X 1-1/2" STRAP W/ 6-16d NAILS AT EACH SIDE OF NOTCH.

DOUBLE TOP PLATE

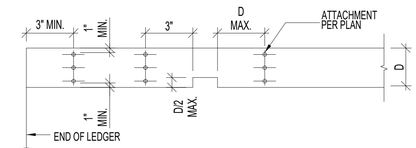

LEDGER

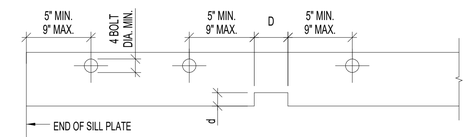

SILL PLATE

NOTE:
1. FOR LEDGERS: WHERE DEPTH OF NOTCH (d) IS GREATER THAN D/5 PROVIDE CONNECTION EA. SIDE OF NOTCH AS SHOWN

2. FOR SILL PLATES: WHERE DEPTH OF NOTCH IS GREATER THAN D/5 PROVIDE ANCHOR BOLT EA. SIDE OF NOTCH AS SHOWN.

1 S604 NOTCHES AND HOLES

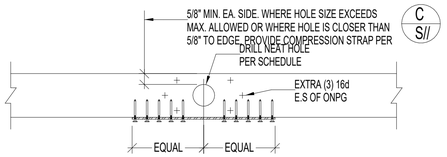

D TENSION STRAP - PLAN VIEW

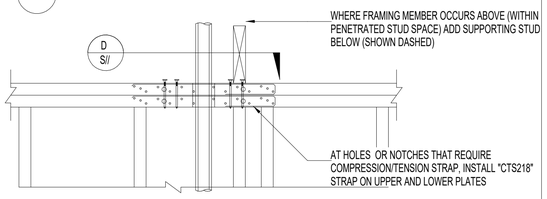

B TENSION STRAP AT DRILLED HOLES

7 S604 TENSION STRAP AT DRILLED HOLES

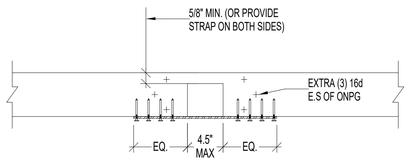

E COMPRESSION STRAP - PLAN VIEW

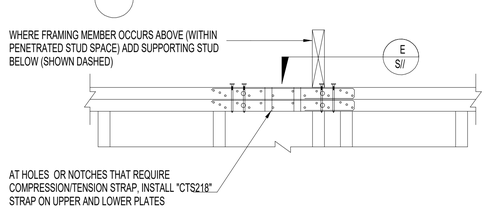

C COMPRESSION STRAP AT NOTCHES

4 S604 COMPRESSION STRAP AT NOTCHES

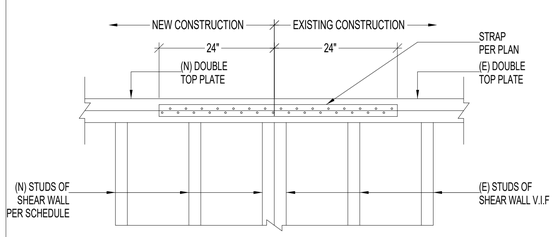

8 S604 RETROFIT STRAP ON WALL ELEVATION

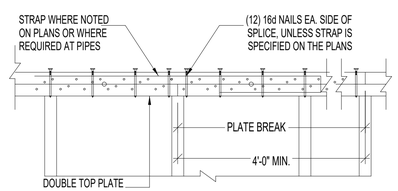

A TYPICAL LAP SPLICE

5 S604 TYPICAL TOP PLATE SPLICE

STRUCTURAL DIAPHRAGM SCHEDULE			
NOTES: STRUCTURAL PLYWOOD OR OSB SHALL BE APA RATED, PS1-95 AND SHALL BE C-D GRADE WITH EXTERIOR GLUE.			
LOCATION	TYPE	NAILING	BLOCKING
FLOORS	PLYWOOD SHEATHING INDEX #48/24	3/4" PLYWOOD W/ 10d COMMON NAILS SUPPORTED PANEL EDGES @ 4" O.C. INTERMEDIATE @10" O.C.	BLOCKING REQUIRED OR T & G
ROOF DECKS	PLYWOOD SHEATHING INDEX #48/24	3/4" PLYWOOD W/ 10d COMMON NAILS SUPPORTED PANEL EDGES @ 4" O.C. INTERMEDIATE @10" O.C	BLOCKING REQUIRED SHEATHING GLUE & NAIL TO JOIST
ROOFS	PLYWOOD SHEATHING INDEX #32/16	15/32" PLYWOOD W/ 8d COMMON NAILS SUPPORTED PANEL EDGES @ 4" O.C. INTERMEDIATE @12" O.C	BLOCKING MIGHT NOT BE REQUIRED. VERIFY WITH ENGINEER OF RECORD.

3 S604 DIAPHRAGM SCHEDULE

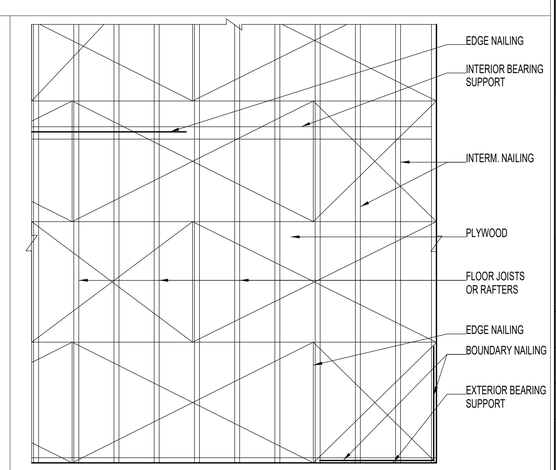

NOTES:
1. STRUCTURAL PLYWOOD OR OSB SHALL BE APA RATED, PS1-95 AND SHALL BE C-D GRADE WITH EXTERIOR GLUE.

2 S604 TYPICAL ROOF AND FLOOR DIAPH.

FOR PERMIT

08/01/2022
FOR PERMIT

TANGObuilder
2261 Market Street #4004
San Francisco CA, 94114
www.tangobuilder.com

REGISTERED PROFESSIONAL ENGINEER
JAN BAUTISTA ALEMAN-FERNANDEZ
C 86746
EXP. 03/31/2023
STATE OF CALIFORNIA

REV#	DATE	DESCRIPTION

10315 KENNY LN

CALIFORNIA

LIGHT-FRAMING DETAILS

PROJECT NUMBER:

S604

8/1/2022 4:10:30 PM

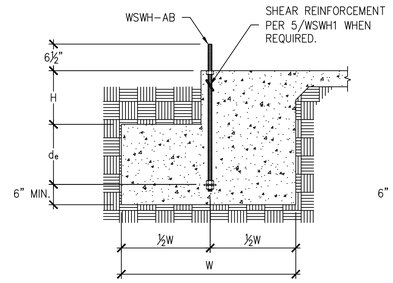

SLAB ON GRADE FOUNDATION

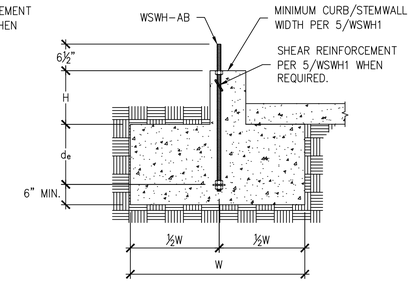

CURB OR STEMWALL FOUNDATION

NOTES :
1. SEE 2/WSWH1 FOR DIMENSIONS AND ADDITIONAL NOTES.
2. SEE 5/WSWH1 FOR SHEAR REINFORCEMENT WHEN REQUIRED.
3. MAXIMUM H = l_e–d_e. SEE 3/WSWH1 AND 4/WSWH1 FOR l_e.

DESIGNER IS PERMITTED TO MODIFY DETAILS FOR SPECIFIC CONDITIONS.

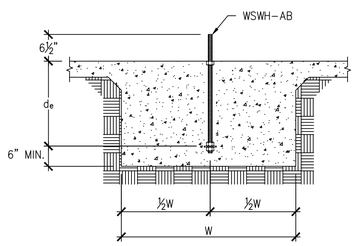

INTERIOR FOUNDATION

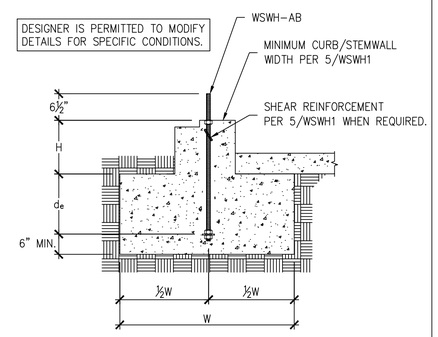

BRICK LEDGE FOUNDATION

STRONG-WALL® WSWH ANCHORAGE - TYPICAL SECTIONS 1

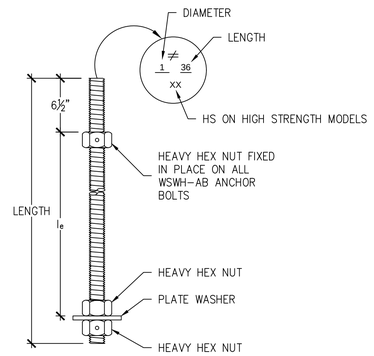

WSWH PANEL MODEL	MODEL NO.	DIAMETER	LENGTH	l_e
WSWH12, WSWH18 AND WSWH24	WSWH–AB1x24	1"	24"	15½"
	WSWH–AB1x24HS	1"	24"	15½"
	WSWH–AB1x30	1"	30"	21½"
	WSWH–AB1x30HS	1"	30"	21½"
	WSWH–AB1x36	1"	36"	27½"
	WSWH–AB1x36HS	1"	36"	27½"
	WSWH–AB1x42	1"	42"	33½"
	WSWH–AB1x42HS	1"	42"	33½"
	WSWH–AB1x48	1"	48"	39½"
	WSWH–AB1x48HS	1"	48"	39½"

WSWH ANCHOR BOLTS 3

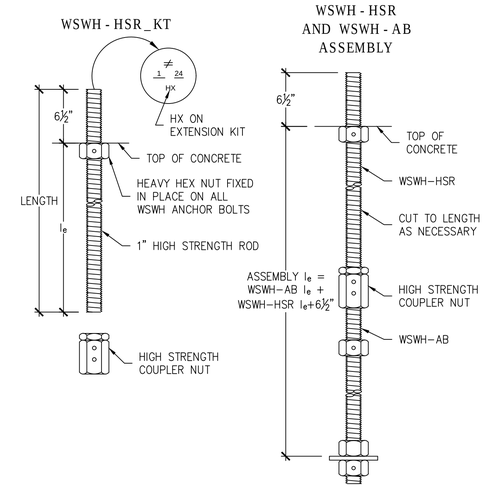

WSWH PANEL MODEL	MODEL NO.	DIAMETER	LENGTH	l_e
WSWH12, WSWH18 AND WSWH24	WSWH–HSR1x24KT	1"	24"	17½"
	WSWH–HSR1x36KT	1"	36"	29½"

WSWH ANCHOR BOLT EXTENSION 4

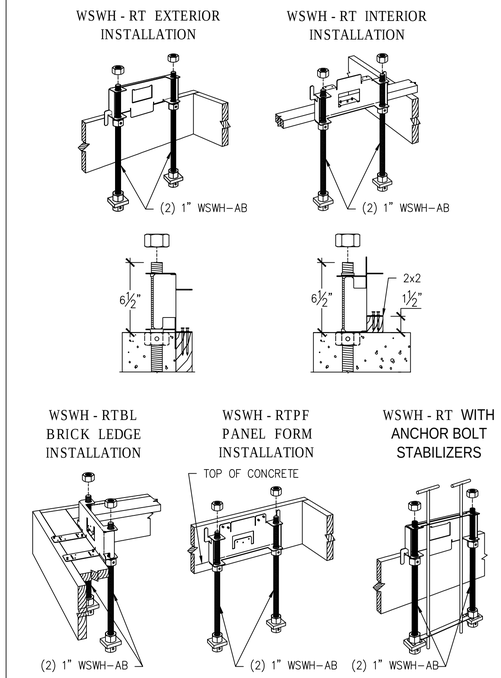

WSWH ANCHOR BOLT TEMPLATES 6

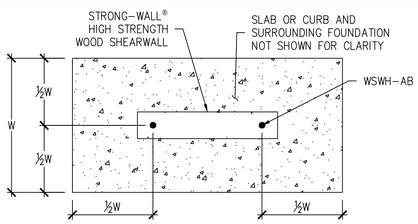

FOUNDATION PLAN VIEW

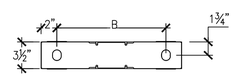

WSWH PLAN VIEW
ANCHORAGE LAYOUT

ANCHOR BOLT LAYOUT	
STRONG-WALL® HIGH STRENGTH WOOD SHEARWALL MODEL NO.	DISTANCE FROM CENTER-TO-CENTER OF WSWH-AB, B (in)
WSWH12	8⅝
WSWH18	14
WSWH24	20

NOTES :
1. ANCHORAGE DESIGNS CONFORM TO ACI 318–11 APPENDIX D, ACI 318–14 CHAPTER 17 AND ACI 318–19 CHAPTER 17 WITH NO SUPPLEMENTARY REINFORCEMENT FOR CRACKED OR UNCRACKED CONCRETE AS NOTED.
2. ANCHOR STRENGTH INDICATES REQUIRED GRADE OF WSWH–AB ANCHOR BOLT. STANDARD (ASTM F1554 GRADE 36) OR HIGH STRENGTH (HS) (ASTM A193 GRADE B7).
3. SEISMIC INDICATES SEISMIC DESIGN CATEGORY C–F. DETACHED 1 AND 2 FAMILY DWELLINGS IN SDC C MAY USE WIND ANCHORAGE SOLUTIONS. SEISMIC ANCHORAGE DESIGNS CONFORM TO ACI 318–11 SECTION D.3.3.4.3, ACI 318–14 SECTION 17.2.3.4.3 AND ACI 318–19 SECTION 17.10.5.3.
4. WIND INCLUDES SEISMIC DESIGN CATEGORY A AND B AND DETACHED 1 AND 2 FAMILY DWELLINGS IN SDC C.
5. FOUNDATION DIMENSIONS ARE FOR ANCHORAGE ONLY. FOUNDATION DESIGN (SIZE AND REINFORCEMENT) BY OTHERS. THE DESIGNER MAY SPECIFY ALTERNATE EMBEDMENT, FOOTING SIZE OR ANCHOR BOLT.
6. REFER TO 1/WSWH1 FOR d_e.

WSWH ANCHORAGE SOLUTIONS FOR 2500 PSI CONCRETE					
DESIGN CRITERIA	CONCRETE CONDITION	ANCHOR STRENGTH	WSWH-AB1 ANCHOR BOLT		
			ASD ALLOWABLE UPLIFT (lbs)	W (in)	d_e (in)
SEISMIC	CRACKED	STANDARD	16,000	33	11
			17,100	35	12
		HIGH STRENGTH	34,100	52	18
			36,800	55	19
	UNCRACKED	STANDARD	15,700	28	10
			17,100	30	10
		HIGH STRENGTH	33,500	45	15
			36,800	48	16
WIND	CRACKED	STANDARD	6,200	16	6
			11,400	24	8
			17,100	32	11
		HIGH STRENGTH	21,100	36	12
			27,300	42	14
			34,100	48	16
			36,800	51	17
	UNCRACKED	STANDARD	6,400	14	6
			12,500	22	8
			17,100	28	10
		HIGH STRENGTH	22,900	33	11
			26,400	36	12
			34,200	42	14
			36,800	44	15

WSWH ANCHORAGE SOLUTIONS FOR 3000 PSI CONCRETE					
DESIGN CRITERIA	CONCRETE CONDITION	ANCHOR STRENGTH	WSWH-AB1 ANCHOR BOLT		
			ASD ALLOWABLE UPLIFT (lbs)	W (in)	d_e (in)
SEISMIC	CRACKED	STANDARD	16,000	31	11
			17,100	33	11
		HIGH STRENGTH	33,900	49	17
			36,800	52	18
	UNCRACKED	STANDARD	16,300	27	9
			17,100	28	10
		HIGH STRENGTH	34,000	43	15
			36,800	46	16
WIND	CRACKED	STANDARD	5,600	14	6
			10,200	21	7
			17,100	30	10
		HIGH STRENGTH	20,000	33	11
			26,500	39	13
			33,600	45	15
			36,800	48	16
	UNCRACKED	STANDARD	6,200	13	6
			12,800	21	7
			17,100	26	9
		HIGH STRENGTH	21,800	30	10
			28,900	36	12
			33,100	39	13
			36,800	42	14

WSWH ANCHORAGE SOLUTIONS FOR 4500 PSI CONCRETE					
DESIGN CRITERIA	CONCRETE CONDITION	ANCHOR STRENGTH	WSWH-AB1 ANCHOR BOLT		
			ASD ALLOWABLE UPLIFT (lbs)	W (in)	d_e (in)
SEISMIC	CRACKED	STANDARD	16,000	27	9
			17,100	29	10
		HIGH STRENGTH	34,700	44	15
			36,800	46	16
	UNCRACKED	STANDARD	15,700	23	8
			17,100	25	9
		HIGH STRENGTH	33,900	38	13
			36,800	40	14
WIND	CRACKED	STANDARD	6,800	14	6
			11,600	20	7
			17,100	26	9
		HIGH STRENGTH	21,400	30	10
			28,400	36	12
			32,400	39	13
			36,800	43	15
	UNCRACKED	STANDARD	6,800	12	6
			12,400	18	6
			17,100	23	8
		HIGH STRENGTH	22,800	27	9
			26,700	30	10
			30,700	33	11
			36,800	37	13

STRONG-WALL® HIGH STRENGTH WOOD SHEARWALL TENSION ANCHORAGE SCHEDULE 2,500, 3,000 AND 4,500 PSI 2

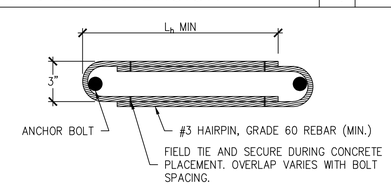

HAIRPIN SHEAR REINFORCEMENT

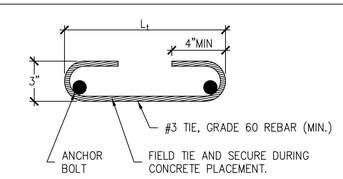

TIE SHEAR REINFORCEMENT

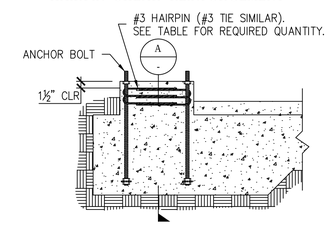

HAIRPIN INSTALLATION
(GARAGE CURB SHOWN. OTHER FOOTING TYPES SIMILAR.)

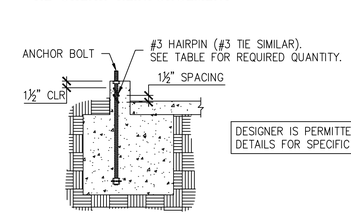

SECTION A

DESIGNER IS PERMITTED TO MODIFY DETAILS FOR SPECIFIC CONDITIONS.

STRONG-WALL® HIGH STRENGTH WOOD SHEARWALL SHEAR ANCHORAGE						
MODEL	SEISMIC[3]			WIND[4]		
	L_t OR L_h (in.)	SHEAR REINFORCEMENT	MIN. CURB / STEMWALL WIDTH (in.)	SHEAR REINFORCEMENT	MIN. CURB / STEMWALL WIDTH (in.)	ASD ALLOWABLE SHEAR LOAD, V (lb.)
						UNCRACKED / CRACKED
WSWH12	10¼	(1) #3 TIE	6	SEE NOTE 7	6	1,080 / 770
WSWH18	15	(2) #3 HAIRPINS[5,6]	6	(1) #3 HAIRPIN	6	HAIRPIN REINF. ACHIEVES MAX. ALLOW SHEAR LOAD OF THE WSWH
WSWH24	19	(2) #3 HAIRPINS[5]	6	(2) #3 HAIRPINS[5]	6	

NOTES :
1. SHEAR ANCHORAGE DESIGNS CONFORM TO ACI 318–19, ACI 318–11 AND ACI 318–14 AND ASSUME MINIMUM 2,500 PSI CONCRETE.
2. SHEAR REINFORCEMENT IS NOT REQUIRED FOR INTERIOR FOUNDATION APPLICATIONS (PANEL INSTALLED AWAY FROM EDGE OF CONCRETE), OR BRACED WALL PANEL APPLICATIONS.
3. SEISMIC INDICATES SEISMIC DESIGN CATEGORY C THROUGH F. DETACHED 1 AND 2 FAMILY DWELLINGS IN SDC C MAY USE WIND ANCHORAGE SOLUTIONS. SEISMIC SHEAR REINFORCEMENT DESIGNS CONFORM TO ACI 318–19, SECTION 17.10.6.3, ACI 318–14, SECTION 17.2.3.5.3
4. WIND INCLUDES SEISMIC DESIGN CATEGORY A AND B.
5. ADDITIONAL TIES MAY BE REQUIRED AT GARAGE CURB OR STEMWALL INSTALLATIONS BELOW ANCHOR REINFORCEMENT PER DESIGNER.
6. USE (1) #3 HAIRPIN FOR WSWH18 WHEN STANDARD STRENGTH ANCHOR IS USED.
7. USE (1) #3 TIE FOR WSWH12 WHEN PANEL DESIGN SHEAR FORCE EXCEEDS TABULATED ANCHORAGE ALLOWABLE SHEAR LOAD.
8. #4 GRADE 40 SHEAR REINFORCEMENT MAY BE SUBSTITUTED FOR WSWH SHEAR ANCHORAGE SOLUTIONS.
9. CONCRETE EDGE DISTANCE FOR ANCHORS MUST COMPLY WITH ACI 318–19 SECTION 17.9.2, ACI 318–14 SECTION 17.7.2 AND ACI 318–11 SECTION D.8.2.
10. THE DESIGNER MAY SPECIFY ALTERNATE SHEAR ANCHORAGE.

STRONG-WALL® WSWH SHEAR ANCHORAGE SCHEDULE AND DETAILS 5

NO.	DATE	REVISIONS
0	02-26-2021	FIRST RELEASE - 2018 IBC
1	03-16-2021	2021 IBC REVISIONS
2	04-29-2022	ADDED WSWH-AB MODELS

SIMPSON Strong-Tie, Co. Inc.
• 5956 W. Las Positas Blvd. Pleasanton, CA 94588
• Tel: (800) 999-5099
• Website: www.strongtie.com

SIMPSON Strong-Tie THERE IS NO EQUAL

STRONG-WALL® WSWH
ANCHORAGE DETAILS
ENGINEERED DESIGNS

SIMPSON Strong-Tie THERE IS NO EQUAL

NAME
DATE 04-29-2022
SCALE N.T.S.
CHECKED
SHEET WSWH1
OF SHEETS
JOB NO.

STRONG-WALL® HIGH STRENGTH WOOD SHEARWALL MODELS

MODEL NO.	W (in.)	H (in.)	ANCHOR BOLTS		TOTAL WALL WEIGHT (lb.)
			QUANTITY	DIA. (in.)	
WSWH12x7	12	84	2	1	105
WSWH18x7	18	84	2	1	155
WSWH12x8	12	96	2	1	120
WSWH18x8	18	96	2	1	175
WSWH24x8	24	96	2	1	225
WSWH12x9	12	108	2	1	130
WSWH18x9	18	108	2	1	195
WSWH24x9	24	108	2	1	250
WSWH12x10	12	120	2	1	145
WSWH18x10	18	120	2	1	210
WSWH24x10	24	120	2	1	275
WSWH12x12	12	144	2	1	165
WSWH18x12	18	144	2	1	245
WSWH24x12	24	144	2	1	325
WSWH18x14	18	168	2	1	285
WSWH24x14	24	168	2	1	370
WSWH24x16	24	192	2	1	420
WSWH18x20	18	240	2	1	390
WSWH24x20	24	240	2	1	520

V.I.F- NOTIFY EOR IF ACTUAL HEIGHT IS DIFFERENT THAN ASSUMED

NOTES :
1. FOR HEIGHTS NOT LISTED, ORDER THE NEXT TALLEST PANEL AND TRIM TO FIT. MINIMUM TRIMMED HEIGHT FOR ALL PANELS IS 74½".
2. ALL PANELS COME WITH PRE-ATTACHED HOLDOWNS, TWO HEAVY HEX NUTS, TWO HEAVY BEARING PLATES, ONE WSWH-TP TOP CONNECTION PLATE WITH REQUIRED FASTENERS AND INSTALLATION INSTRUCTIONS.
3. ALL PANELS ARE 3½" THICK.

STRONG-WALL® WSWH MODELS 1

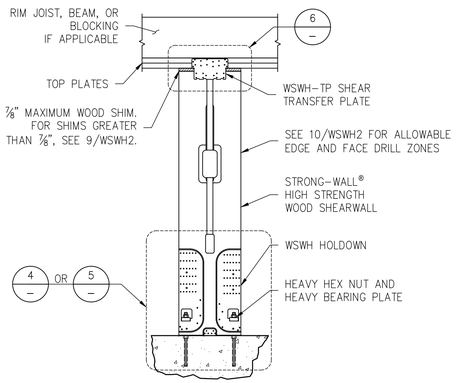

DESIGNER IS PERMITTED TO MODIFY DETAILS FOR SPECIFIC CONDITIONS.

ENSURE CONCRETE IS LEVEL AND SMOOTH BENEATH PANEL. GRIND OR FILL AS NECESSARY.

SINGLE STORY WSWH ON CONCRETE 2

STANDARD INSTALLATION BASE CONNECTION 4

DESIGNER IS PERMITTED TO MODIFY DETAILS FOR SPECIFIC CONDITIONS.

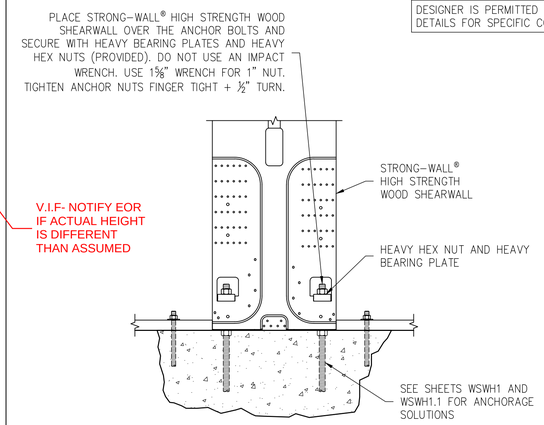

WOOD FLOOR SYSTEM BASE CONNECTION 5

STRONG-WALL® HIGH STRENGTH WOOD SHEARWALL HEIGHT TO INCLUDE THE DEPTH OF THE FLOOR SYSTEM AND SHALL BE INSTALLED DIRECTLY ON THE FOUNDATION. SPECIFY PANEL HEIGHT FROM TOP OF FOUNDATION TO UNDERSIDE OF TOP PLATES OR BEAM.

TOP CONNECTION 6

MODEL NO.	WSWH-TP CONNECTION	
	FASTENER QUANTITY	
	SWS16150	SDS25600
WSWH-TP12	14	2
WSWH-TP18	26	4
WSWH-TP24	46	8

DESIGNER IS PERMITTED TO MODIFY DETAILS FOR SPECIFIC CONDITIONS.

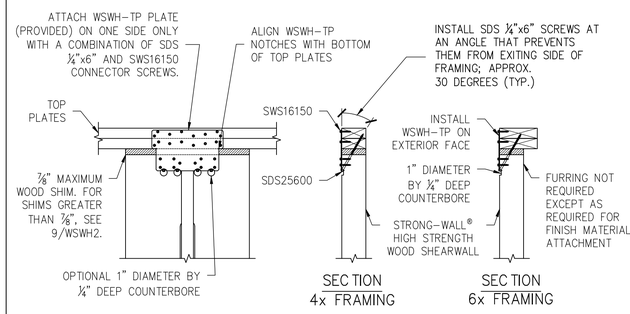

BACK-TO-BACK TOP CONNECTION 7

MODEL NO.	WSWH-TP CONNECTION	
	FASTENER QUANTITY	
	SWS16150	SDS25600
WSWH-TP12	28	4
WSWH-TP18	52	8
WSWH-TP24	92	16

DESIGNER IS PERMITTED TO MODIFY DETAILS FOR SPECIFIC CONDITIONS.

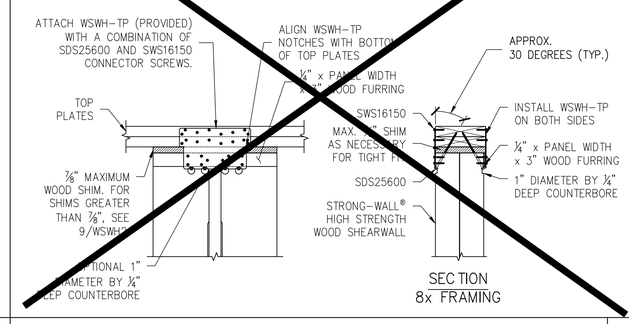

TOP OF WALL HEIGHT ADJUSTMENTS 9

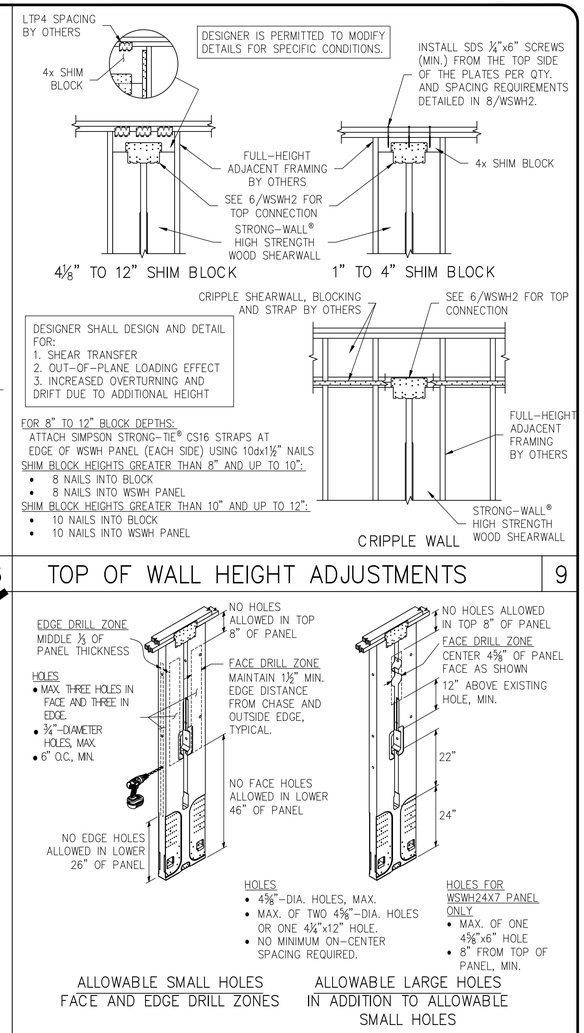

DESIGNER SHALL DESIGN AND DETAIL FOR:
1. SHEAR TRANSFER
2. OUT-OF-PLANE LOADING EFFECT
3. INCREASED OVERTURNING AND DRIFT DUE TO ADDITIONAL HEIGHT

FOR 8" TO 12" BLOCK DEPTHS:
ATTACH SIMPSON STRONG-TIE® CS16 STRAPS AT EDGE OF WSWH PANEL (EACH SIDE) USING 10dx1½" NAILS

SHIM BLOCK HEIGHTS GREATER THAN 8" AND UP TO 10":
- 8 NAILS INTO BLOCK
- 8 NAILS INTO WSWH PANEL

SHIM BLOCK HEIGHTS GREATER THAN 10" AND UP TO 12":
- 10 NAILS INTO BLOCK
- 10 NAILS INTO WSWH PANEL

TRIM ZONE AND ALLOWABLE HOLES 10

ALTERNATE WSWH GARAGE FRONT OPTIONS 3

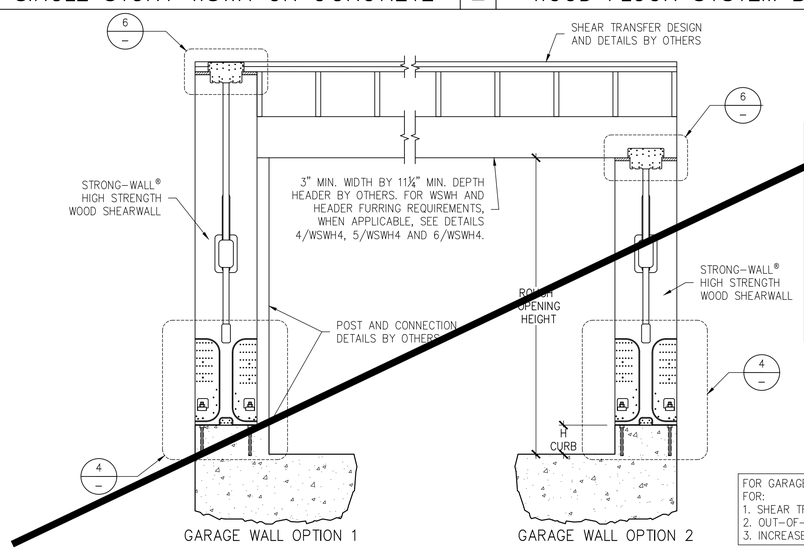

DESIGNER IS PERMITTED TO MODIFY DETAILS FOR SPECIFIC CONDITIONS.

WHEN WSWH-TP STRAPS OMITTED, ALLOWABLE SHEAR VALUES FOR STANDARD PANEL APPLY.

GARAGE HEADER ROUGH OPENING HEIGHT

MODEL NO.	TRIMMED PANEL HEIGHT	H CURB	ROUGH OPENING HEIGHT
WSWH12x7 WSWH18x7 WSWH24x7	78"	5½"	6'-11½"
		6"	7'-0"
WSWH12x8 WSWH18x8 WSWH24x8	85½"	0"	7'-1½"
	93¾"	5½"	8'-2¾"
		6"	8'-3¼"

NOTES :
1. IF REQUIRED ROUGH OPENING HEIGHT EXCEEDS TABLE VALUE, SPECIFY NEXT TALLER PANEL AND TRIM AS NECESSARY. THE STRONG-WALL® HIGH STRENGTH WOOD SHEARWALL MAY BE TRIMMED TO A MINIMUM HEIGHT OF 74½".
2. FURRING DOWN GARAGE HEADER MAY BE REQUIRED FOR CORRECT ROUGH OPENING HEIGHT.

FOR GARAGE WALL OPTION 2, DESIGNER SHALL DESIGN AND DETAIL FOR:
1. SHEAR TRANSFER
2. OUT-OF-PLANE LOADING EFFECT
3. INCREASED OVERTURNING AND DRIFT DUE TO ADDITIONAL HEIGHT

RAKE WALL 8

QTY. OF SDS¼"x6" SCREWS REQ'D.	
WSWH12	4
WSWH18	8
WSWH24	16

DESIGNER IS PERMITTED TO MODIFY DETAILS FOR SPECIFIC CONDITIONS.

EDGE DISTANCE FOR SCREWS		
SLOPE	A (in.)	B (in.)
0:12-4:12	2	3
5:12-8:12	1½	4½
9:12-12:12	1½	6½

NOTES :
1. MAINTAIN END DISTANCES TO PREVENT SCREWS FROM PENETRATING THROUGH THE OUTER EDGES.
2. INSTALL SCREWS PERPENDICULAR TO THE TOP PLATE.
3. EDGE DISTANCES ASSUME DOUBLE TOP PLATE.

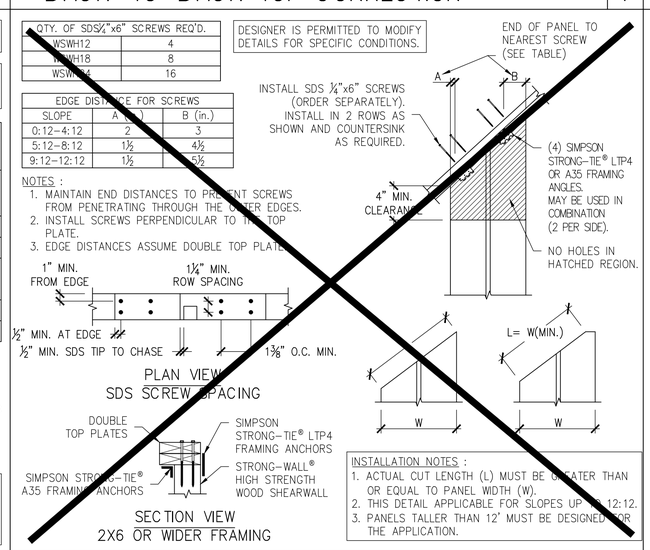

INSTALLATION NOTES :
1. ACTUAL CUT LENGTH (L) MUST BE GREATER THAN OR EQUAL TO PANEL WIDTH (W).
2. THIS DETAIL APPLICABLE FOR SLOPES UP TO 12:12.
3. PANELS TALLER THAN 12' MUST BE DESIGNED FOR THE APPLICATION.

NOTES 11

1. STRONG-WALL® HIGH STRENGTH WOOD SHEARWALL IS MANUFACTURED AND TRADEMARKED BY "SIMPSON STRONG-TIE COMPANY INC." HOME OFFICE: 5956 W. LAS POSITAS BLVD., PLEASANTON, CA 94588 TEL: (800) 999-5099, FAX: (925) 847-1597. "SIMPSON STRONG-TIE COMPANY INC." IS AN ISO 9001-2008 REGISTERED COMPANY.
2. USE OF THIS PRODUCT IS SUBJECT TO THE APPROVAL OF THE LOCAL BUILDING DEPARTMENT.
3. THIS PRODUCT IS PART OF THE OVERALL LATERAL FORCE RESISTING SYSTEM OF THE STRUCTURE. DESIGN OF THE BUILDING'S LATERAL FORCE RESISTING SYSTEM, INCLUDING THE LOAD PATH TO TRANSFER LATERAL FORCES FROM THE STRUCTURE TO THE GROUND, IS THE RESPONSIBILITY OF THE DESIGNER.
4. ENGINEER OF RECORD IS PERMITTED TO MODIFY DETAILS FOR SPECIFIC CONDITIONS.
5. THE CONTRACTOR SHALL VERIFY ALL DIMENSIONS, CONDITIONS, ELEVATIONS, ETC. PRIOR TO INSTALLATION OF ANY COMPONENTS FOR THE STRONG-WALL SB SYSTEM. IF ANY DISCREPANCIES ARE FOUND, THEY SHALL BE BROUGHT TO THE ATTENTION OF THE DESIGNER FOR CLARIFICATION PRIOR TO CONSTRUCTION.
6. INSTALLATION OF PRODUCT SHALL BE DONE IN CONFORMANCE TO THESE DRAWINGS. THE PERFORMANCE OF MODIFIED PRODUCTS OR ALTERED INSTALLATION PROCEDURES ARE THE SOLE RESPONSIBILITY OF THE DESIGNER.
7. SIMPSON STRONG-TIE COMPANY INC. RESERVES THE RIGHT TO CHANGE SPECIFICATIONS, DESIGNS, AND MODELS WITHOUT NOTICE OR LIABILITY FOR SUCH CHANGES.
8. ALL HARDWARE CALLED OUT IS SIMPSON STRONG-TIE.
9. SEE ICC-ES ESR-2652 OR CITY OF LOS ANGELES RR25730 AS APPLICABLE FOR ADDITIONAL INFORMATION.

NO.	DATE	REVISIONS
0	11-20-2020	FIRST RELEASE - 2018 IBC
1	03-16-2021	2021 IBC REVISIONS

SIMPSON Strong-Tie, Co. Inc.
• 5956 W. Las Positas Blvd. Pleasanton, CA 94588
• Tel: (800) 999-5099
• Website: www.strongtie.com

SIMPSON Strong-Tie — THERE IS NO EQUAL

STRONG-WALL® WSWH
FRAMING DETAILS
ENGINEERED DESIGNS

SIMPSON Strong-Tie — THERE IS NO EQUAL

NAME
DATE 03-16-2021
SCALE N.T.S.
CHECKED
SHEET WSWH2
OF SHEETS
JOB NO.

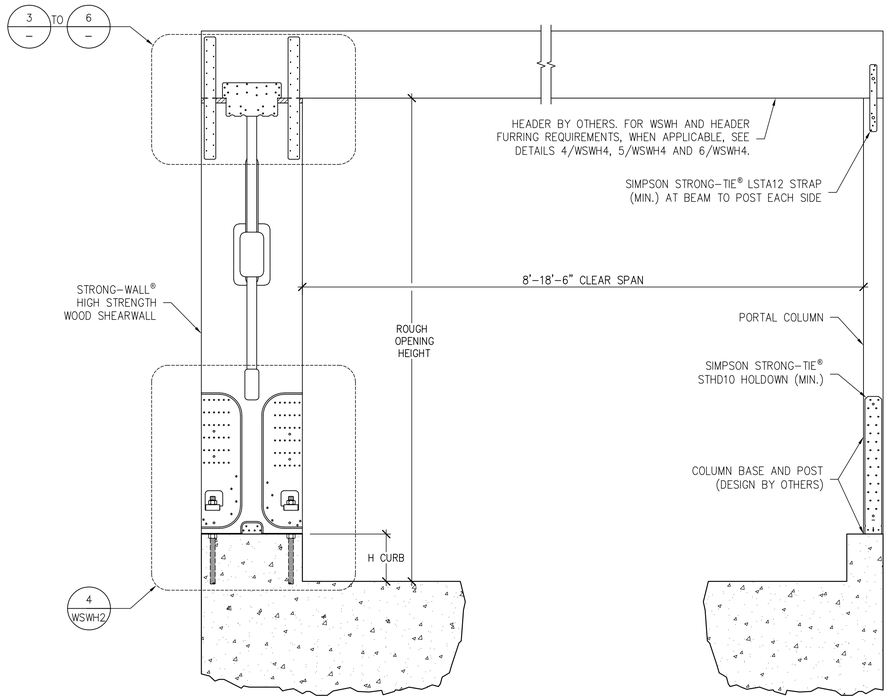

GARAGE HEADER ROUGH OPENING HEIGHT			
MODEL NO.	TRIMMED PANEL HEIGHT	H CURB	ROUGH OPENING HEIGHT
WSWH12x7 WSWH18x7 WSWH24x7	78"	5½"	6'-11½"
		6"	7'-0"
WSWH12x8 WSWH18x8 WSWH24x8	85½"	0"	7'-1½"
	93¼"	5½"	8'-2¾"
		6"	8'-3¼"

NOTES :
1. IF REQUIRED ROUGH OPENING HEIGHT EXCEEDS TABLE VALUE, SPECIFY NEXT TALLER PANEL AND TRIM AS NECESSARY. THE STRONG-WALL® HIGH STRENGTH WOOD SHEARWALL MAY BE TRIMMED TO A MINIMUM HEIGHT OF 74½".
2. FURRING DOWN GARAGE HEADER MAY BE REQUIRED FOR CORRECT ROUGH OPENING HEIGHT.

DESIGNER IS PERMITTED TO MODIFY DETAILS FOR SPECIFIC CONDITIONS.

ENSURE CONCRETE IS LEVEL AND SMOOTH BENEATH PANEL. GRIND OR FILL AS NECESSARY.

STRONG-WALL® HIGH STRENGTH WOOD SHEARWALL SINGLE PORTAL ASSEMBLY — 1

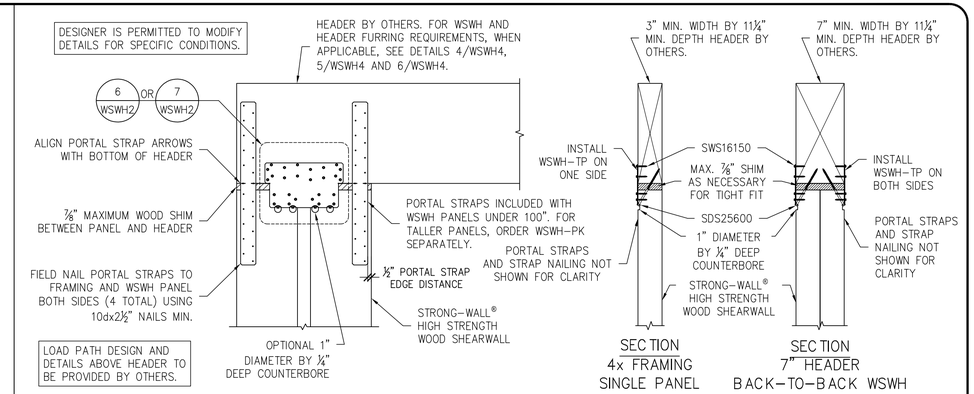

PORTAL TOP CONNECTION — 3

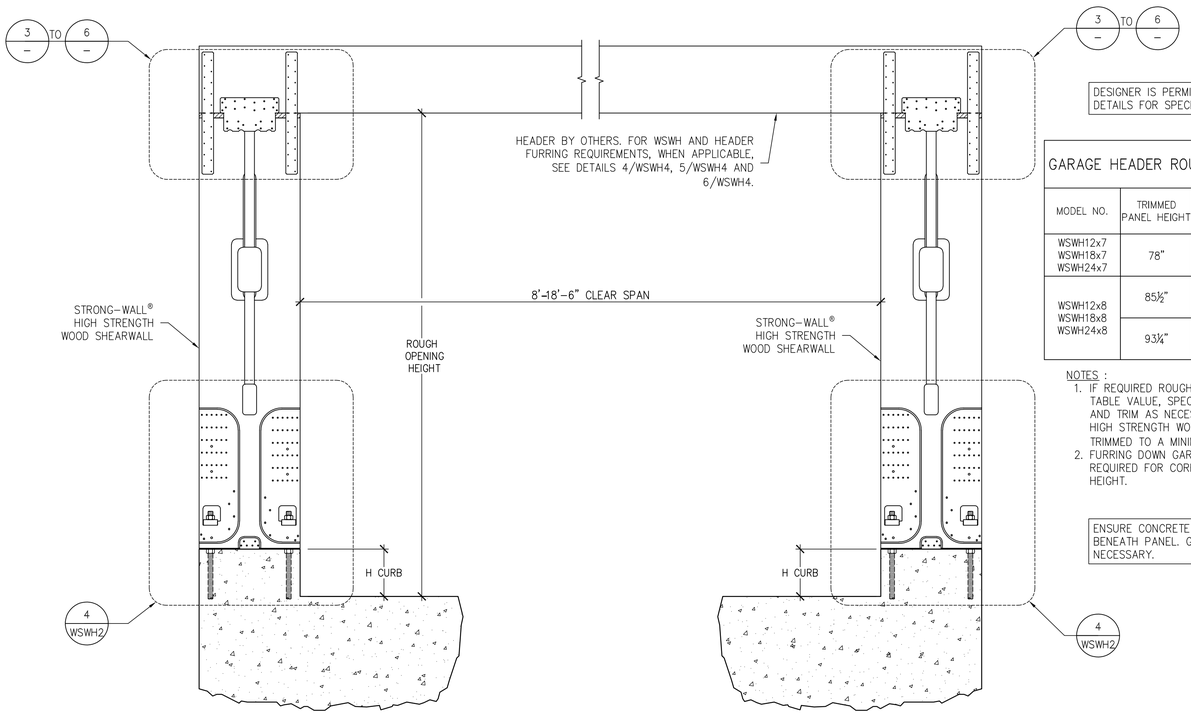

DESIGNER IS PERMITTED TO MODIFY DETAILS FOR SPECIFIC CONDITIONS.

GARAGE HEADER ROUGH OPENING HEIGHT			
MODEL NO.	TRIMMED PANEL HEIGHT	H CURB	ROUGH OPENING HEIGHT
WSWH12x7 WSWH18x7 WSWH24x7	78"	5½"	6'-11½"
		6"	7'-0"
WSWH12x8 WSWH18x8 WSWH24x8	85½"	0"	7'-1½"
	93¼"	5½"	8'-2¾"
		6"	8'-3¼"

NOTES :
1. IF REQUIRED ROUGH OPENING HEIGHT EXCEEDS TABLE VALUE, SPECIFY NEXT TALLER PANEL AND TRIM AS NECESSARY. THE STRONG-WALL® HIGH STRENGTH WOOD SHEARWALL MAY BE TRIMMED TO A MINIMUM HEIGHT OF 74½".
2. FURRING DOWN GARAGE HEADER MAY BE REQUIRED FOR CORRECT ROUGH OPENING HEIGHT.

ENSURE CONCRETE IS LEVEL AND SMOOTH BENEATH PANEL. GRIND OR FILL AS NECESSARY.

STRONG-WALL® HIGH STRENGTH WOOD SHEARWALL DOUBLE PORTAL ASSEMBLY — 2

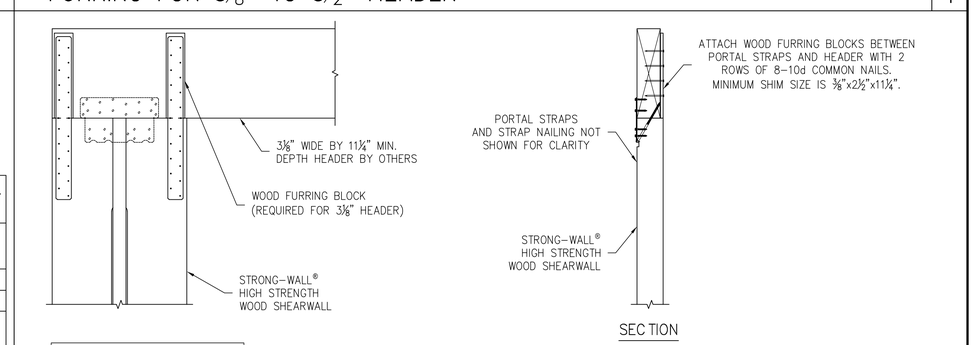

FURRING FOR 5⅛" TO 5½" HEADER — 4

FURRING FOR 3⅛" HEADER — 5

FURRING FOR DOUBLE 2X12 HEADERS — 6

NO.	DATE	REVISIONS
0	11-23-2020	FIRST RELEASE - 2018 IBC
1	03-16-2021	2021 IBC REVISIONS

SIMPSON Strong-Tie, Co. Inc.
• 5956 W. Las Positas Blvd. Pleasanton, CA 94588
• Tel: (800) 999-5099
• Website: www.strongtie.com

SIMPSON Strong-Tie — THERE IS NO EQUAL

STRONG-WALL® WSWH
PORTAL SYSTEM
FRAMING DETAILS
ENGINEERED DESIGNS

SIMPSON Strong-Tie — THERE IS NO EQUAL

NAME
DATE 03-16-2021
SCALE N.T.S.
CHECKED
SHEET WSWH4
OF SHEETS
JOB NO.