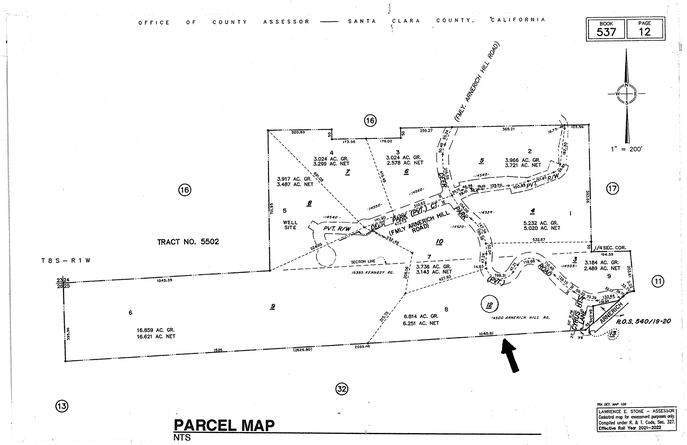

PARCEL MAP
NTS

REMODEL & ADDITIONS TO THE:

RENFREW RESIDENCE

14500 ARNERICH HILL ROAD – APN 537-12-012
LOS GATOS, CALIFORNIA

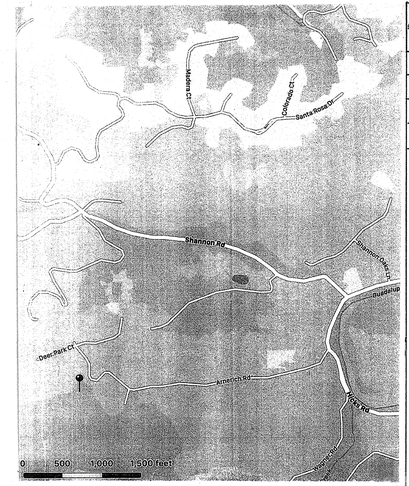

VICINITY MAP
NTS

GENERAL NOTES

LIFE-SAFETY

Provide combustion air for all gas-fired appliances. (CMC Chapter 7)

Vent dryer to outside of building (not to under-floor area). Vent length shall be 14' maximum or vent size shall be increased. (CMC 504.3)

Provide Tempered glass at all hazardous locations per CBC 2406.4 & CRC 308.4

Safety glazing shall be required within 24" of a door edge or within 36" of a stairway, landing or ramp when the bottom edge of the glazing is less than 60" from the floor or walking surface. Safety glazing is required in all fixed and operable panels of swinging, sliding and bi-fold doors.

Skylights shall comply with CRC R 308.6

Safety glazing is required in enclosures and walls facing hot tubs, saunas, steam rooms, showers and tubs where the bottom edge of the glazing is less than 60" from any standing or walking surface.

Fire blocking shall be provided in concealed spaces of stud walls and partitions, including furred spaces, and parallel rows of studs or staggered studs; vertically at floor and ceiling levels, horizontally at intervals not to exceed 10'. Openings around gas vents, ducts, chimneys and fireplaces at ceiling and floor levels shall have fire blocking per CBC 717.1 & CRC 302.11.

Provide minimum 22" x 30" access opening to attic. In attics in which an appliance is installed, an opening and passageway at least as large as the largest component of the appliance shall be required. (CMC 904.11)

Floor and ceiling assemblies shall be draft stopped so that the area of concealed space does not exceed 1000 SF. The draft stops shall divide the concealed space into approximately equal spaces per CBC 718.2 & CRC 302.12.

LIGHT & VENTILATION

Provide ventilation for products of combustion to outside air. (CMC 801.1)

Attic ventilation: 1/150 of attic area. If a Class I or II vapor barrier is applied to warm-in winter side of ceiling, or, if 50% - 80% of the vents are at least 3' above the eaves and the remaining vents are in the eaves then the ratio may be reduced to 1/300. Enclosed rafter spaces shall have cross ventilation (min. 1" clear)

Under-floor space shall have a ventilation opening area of 1/150 square feet of under-floor area. If a Class I vapor retarder is used the ratio may be reduced to 1/1500. One opening shall be placed within 3 feet of each building corner. Openings shall be covered with a covering having openings no greater than 1/4".

Air infiltration, insulation, space heating, space cooling, water heating…etc. shall meet CA Energy Commission Standards.

HERS certification testing is required for Indoor Air Quality.

DOORS, STAIRWAYS AND LANDINGS

Stairways shall comply with CBC 1009 & CRC R311.7

Required egress door shall be side hinged and have a minimum net clear width of 32" and a minimum height of 78".

There shall be a landing at each side of all doors. The landing shall be at least as wide as the door served and 36"min length measured in the direction of travel. There may one step down of no more than 7.75" provided the door does not swing over the landing.

Stairway rise shall be 4" min and 7.75" max. Run shall be 10" min. Headroom shall be 80" min. Width shall be 36" min. Handrails shall be 34" to 38" above tread nosing with openings less than 4" clear.

Enclosed useable space under interior stairs shall be finished with 1/2" gypsum board.

Fire blocking is required in concealed spaces between stair stringers at the top and bottom of the run.

There shall be a floor or landing at the top and bottom of each stairway. Width and length of landings shall be not less than the width of the stairway and shall be at least 36" in the direction of travel. A floor or landing is not required at the top of an interior flight of stairs, including stairs in an enclosed garage, provided a door does not swing over the stairs.

Guardrails shall comply with CBC 1013.4 & CRC R 312. Guards shall be located along open sided walking surfaces, including stairs, ramps, landings, and decks, that are more than 30" above the floor or grade. Required guards shall be not less than 42" above the adjacent walking surface. Except that handrails may be considered as guards at stairways. Openings in guards shall not exceed 4". Handrails shall comply with CBC 1012 & CRC R 311.7

Glazing used in doors, sidelights and panels of the shower enclosure shall be fully tempered, laminated safety glass or approved plastic. Per CRC R308.3 & R308.4.1.

WEATHER & CORROSION DAMAGE PREVENTION MEASURES

Naturally durable wood or preservative treated wood shall be required in the following locations:

a. Wood joists and girders closer than 18" or 12" respectively, to the exposed ground.

b. Wood framing members that rest on concrete or masonry and are less than 8" from the exposed ground.

c. Sills and sleepers on a concrete or masonry slab that is in direct contact with the ground unless separated by an impervious moisture barrier.

d. Wood siding, sheathing and wall framing on the exterior of the building having a clearance of less than 6" from the ground or less than 2" from a horizontal concrete surface.

GARAGE

Common wall between garage and dwelling shall have 5/8" gypsum board applied on the garage side. Garage ceiling with habitable space above shall have 5/8" type 'X' gypsum board applied to the ceiling.

No openings may be provided between a garage and a sleeping room. Other openings shall be equipped with solid wood or steel doors 1-3/8" in thickness and shall be self-closing and self-latching, 20 min. labeled assembly.

Garage floor surfaces shall be of approved noncombustible material.

Appliances and receptacles installed in garages and carports generating a glow, spark, or flame shall be located 18" min. above the floor. Provide protective bollard or other impact barrier. (CMC 307.1)

ELECTRICAL

Do not install electrical panels larger than 16 square inches in rated fire walls. Never install electrical panels in closet. Maintain a clearance of 36" in front of the panels. (CEC 110.26)

Provide a minimum of one 20 Amp receptacle in laundry areas. (CEC 210.52(F))

Kitchens and dining areas must have a minimum of two 20 Amp branch circuits (CEC 210.11). Kitchen counter outlets must be installed in every counter space 12" or wider, not greater than 4' o.c. and within 24" of the end of any counter space. (CEC 210.52)

GFCI outlets are required for all kitchen receptacles that are designed to serve countertop surfaces, in bathroom, in under-floor spaces or below grade level, in exterior outlets, and in all garage outlets not dedicated to a single device or appliance. (CEC 210.8) All dwellings must have at least one exterior outlet at the front and the back of the dwelling. (CEC 210.52(E))

Receptacles must be installed at 12' o.c. maximum in walls. Walls longer than 2 feet and halls longer than 10' must have a receptacle. A receptacle must be provided within 3' of bathroom sinks. (CEC 210.52) . Spacing of kitchen and dining room countertop receptacles shall meet minimum requirements of CEC 210.52(C), Parts 1-5. Bond all metal gas and water pipes to ground. All ground clamps must be accessible and of an approved type. (CEC 250.104)

Furnaces installed in attics and crawl spaces must have an access platform (catwalk in attics), light, light switch, and receptacle in the space. (CMC 904.11)

Smoke detector/ alarms are to be provided with battery back-up and audible in all sleeping areas and shall be hard-wired and inter-connected per CRC R314.5. When alterations, repairs, or additions require a permit, smoke alarms shall be installed where required in new dwellings.

An approved carbon monoxide alarm shall be installed in dwellings within which fuel-burning appliances are installed, and in dwellings with an attached garage. Carbon monoxide detector/ alarms on all habitable levels and shall be hard-wired and inter-connected per CRC R315.1

Arc-Fault Circuit-Interrupter (AFCI) protected receptacles shall be installed in all rooms not requiring GFCI protection. The maximum length of the branch circuit to the AFCI is 50 feet for 14 AWG conductors or 70 feet for a12 AWG conductor.

Receptacles on 120- volt 15 & 20 amp circuits shall be listed tamper resistant. (CEC 406.11) Except when located more than 5.5' above the floor; within cabinets or cupboards; or when part of a luminaire or appliance.

Provide exhaust fans in bathrooms vented to outside and sized as follows: >/= 50 CFM intermittent, >/= 20 CFM continuous. Exhaust fan ratings to be <!= 1 sone continuous, <!= 3 sones intermittent. Bath fans are to be Energy Star compliant and equipped with humidistat controls for adjustment of relative humidity from 50- to 80%. CalGreen Code 4.506.1

Provide a whole building mechanical exhaust system to outdoor air, with a properly labeled, accessible on/f/ on switch. Covers or louvers are to have min. R 4.2 insulation. **Whole House Ventilation Calculation** per CEC 150(O) & ASHRAE 62.2: 0.03 X heated area + 7.5 x (# of bedrooms + 1) = minimum required CFM exhaust fan, with 2 sone maximum sound rating.

The whole house fan shall be continuously on, unless there are exterior air contaminates present. The on/off mechanism shall be labeled to identify it as controlling the whole house fan,

Any new appliances (installed as part of any remodel, addition or new construction) shall be Energy Star appliances.

Provide a listed raceway to accommodate a dedicated 208/240-volt branch circuit for electric vehicle charging not less than 1" nominal inside diameter. The raceway shall originate at the main service or subpanel and shall terminate in a listed cabinet, box or enclosure in close proximity to the proposed location of the EV charger. Raceways are required to be continuous at enclosed,

inaccessible or concealed areas and spaces. The raceway termination location shall be permanently and visibly marked as "EV CAPABLE". The service panel and/or sub-panel shall provide capacity to install a 40-amp, minimum dedicated branch circuit and space(s) reserved to permit installation of a branch circuit overcurrent protective device. The service panel or sub-panel shall identify the overcurrent protective device space(s) reserved for future EV charging as "EV CAPABLE". The charging circuit must be rated for continuous duty at 125% of load. All Electrical Vehicle Supply Equipment (EVSE) shall be installed in accordance with the California Electrical Code.

PLUMBING

Fuel burning water heater is not allowed in bedroom or bathroom unless direct vent type or complying with CPC 505.1.

Water closet shall be located in a space not less than 30" in width with 24" minimum clearance in front. (CPC 407.5)

Provide 18" x 24" foundation access within 20' of plumbing cleanout. (CPC 707.9)

Provide anti-siphon valves on all hose bibs. (CPC 603.4.7) Strap water heater at points within upper and lower third of tank and 4" min. above controls.

Copper, galvanized or plastic piping shall not be installed under building slab. All solder joints to be lead free. Type M copper tubing shall not be used for water piping.

Provide low flow shower heads and water closets consuming 1.28 gallons per flush or less. (CPC 402.2.2). Install chlorine filters on shower heads, or whole house chlorine filter.

Showers and walls above bathtubs with shower heads shall be finished with a smooth, hard non-absorbent surface to a height of at least 72 in. above the drain outlet per CBC 1210.3 & CRC R307.2.

Provide curtain rod or shower door enclosure with tempered safety glazing per CRC R308.4.

Showers and tub-showers shall be provided with individual control valves of the pressure balance, thermostatic, or combination pressure balance/thermostatic mixing valve type that provide scald and thermal shock protection pre CPC 408.3.

All new waterlines ¾" dia. or larger and all new hot waterlines to the kitchen will be insulated per CEnC150(j)2.A & minimum insulation Table 120.3-A.

Appliances (water heater, F.A.U.) in garages and in adjacent spaces that open to the garage shall be installed so that burners and burner ignition devices are located no less than 18" above floor. Per CMC 3038.1, CPC 507.13, NFPA 54-9.1.10.1.

DEFERRED SUBMITTAL

SUBMITTAL DOCUMENTS FOR DEFERRED SUBMITTAL ITEMS SHALL BE SUBMITTED TO THE ARCHITECT OR ENGINEER OF RECORD, WHO SHALL REVIEW THEM AND FORWARD THEM TO THE BUILDING OFFICIAL WITH A NOTATION INDICATING THAT THE DEFERRED SUBMITTAL DOCUMENTS HAVE BEEN REVIEWED AND THAT THEY HAVE BEEN FOUND TO BE IN GENERAL CONFORMANCE WITH THE DESIGN OF THE BUILDING. THE DEFERRED SUBMITTAL ITEMS SHALL NOT BE INSTALLED UNTIL THE DESIGN AND SUBMITTAL DOCUMENTS HAVE BEEN APPROVED BY THE BUILDING OFFICIAL. THE FOLLOWING ITEMS WILL BE SUBMITTED SEPARATELY FOR THIS PROJECT:

1 PROVIDE COMPLETE DESIGN CALCULATIONS, DRAWINGS AND SPECIFICATIONS FOR FIRE SPRINKLER SYSTEM FOR APPROVAL PRIOR TO INSTALLATION.

2 PROVIDE DESIGN AND DOCUMENTATION FOR A COMPLETE HEATING SYSTEM. PLANS AND SPECIFICATIONS TO INCLUDE APPLIANCE MODELS, SPECIFICATIONS, BTU VALUES, DUCT LAYOUT, MATERIALS AND SIZES, ETC. HEATING AND/OR AIR-CONDITIONING SYSTEMS SHALL BE SIZED, DESIGNED AND HAVE THE EQUIPMENT SELECTED USING THE FOLLOWING METHODS:

A) THE HEAT LOSS AND HEAT GAIN IS ESTABLISHED ACCORDING TO ANSI/ACCA 2 MANUAL J-2011, ASHRAE HANDBOOKS OR OTHER EQUIVALENT DESIGN SOFTWARE OR METHODS.

B) DUCT SYSTEMS ARE SIZED ACCORDING TO ANSI/ACCA 1 MANUAL D-2014, ASHRAE HANDBOOKS OR OTHER EQUIVALENT DESIGN SOFTWARE OR METHODS.

C) SELECT HEATING AND COOLING EQUIPMENT ACCORDING TO ANSI/ACCA 3 MANUAL S-2014 OR OTHER EQUIVALENT DESIGN SOFTWARE OR METHODS.

HERS NOTE

HERS registered forms are required by installing mechanical contractor for the heat pump system. Installing contractor to register project with HERS provider and submit CF2Rs & CF3Rs to jurisdiction before beginning work; HERS certification is required for indoor air quality ventilation. HERS inspection and certification is required for installation of Kitchen downdraft cooktop exhaust. HERS inspection and certification is required for cooling system; verified SEER, Verified Refrigerant Charge, Airflow in Habitable rooms (SC3.1.4.1.7). HERS inspection and certification is required for Heating System; verified HSPF, verified heat pump rated heating capacity, wall-mounted thermostat in zones greater than 150ft2 (SC3.4.5), ductless indoor units located entirely in conditioned space (SC3.1.4.1.8). Quality Insulation Installation (QII) at Music Room. General Contractor shall meet with the HERS Rater prior to commencement of construction.

GRADING NOTES

1 EXCAVATED MATERIAL SHALL BE PLACED IN THE FILL AREAS DESIGNATED OR SHALL BE HAULED AWAY FROM THE SITE. WHERE FILL MATERIAL IS TO BE PLACED ON NATURAL GRADE IT SHALL BE STRIPPED OF ALL VEGETATION, TO ACHIEVE PROPER BOND WITH THE FILL MATERIAL. THE SURFACE OF THE GROUND SHALL BE SCARIFIED TO A DEPTH OF 6" BEFORE THE FILL IS PLACED. WHERE NATURAL GROUND IS STEEPER THAN 5:1, IT SHALL BE BENCHED AND THE FILL KEYED IN TO ACHIEVE STABILITY. WHERE NEW FILL IS TO BE PLACED ON EXISTING FILL, THE EXISTING FILL SHALL BE REMOVED, UNTIL MATERIAL COMPACTED TO 90% RELATIVE DENSITY IS EXPOSED. THE NEW FILL SHALL BE PLACED PER THESE CONSTRUCTION NOTES. FILL MATERIAL SHAL BE PLACED IN UNIFORM LIFTS NOT EXCEEDING 6" IN COMPACTED THICKNESS. BEFORE COMPACTION BEGINS THE FILL SHALL BE BROUGHT TO A WATER CONTENT THAT WILL PERMIT PROPER COMPACTION BY EITHER (1) AERATING THE FILL IF IT IS TOO WET, OR (2) MOISTENING THE FILL WITH WATER IF IT IS TOO DRY. EACH LIFT SHALL BE THOROUGHLY MIXED BEFORE COMPACTION TO INSURE UNIFORM DISTRIBUTION OF MOISTURE.

2 NO ORGANIC MATERIAL SHALL BE PLACED IN ANY FILL.

3 THE UPPER 12" OF SUB-GRADE BELOW DRIVEWAY OR PARKING AREA SHALL BE COMPACTED TO 95% RELATIVE DENSITY.

4 BUILDING LOCATION AND PAD ELEVATION TO BE DONE BY A LICENSED SURVEYOR OR CIVIL ENGINEER PRIOR TO GRADING.

5 CONTRACTOR TO ARRANGE A PRE-GRADING MEETING WITH THE SANTA CLARA COUNTY INSPECTOR PRIOR TO BEGINNING ANY WORK.

6 NO POTABLE WATER TO BE USED FOR ANY GRADING PURPOSES ON THIS PROJECT.

7 PERMITTED HOURS OF WORK ARE 7:30 AM TO 6:00 PM, MONDAY THROUGH FRIDAY.

8 ALL UTILITIES TO BE UNDERGROUND, TYPICAL. PROVIDE CHECK VALVE ON WATER SERVICE.

GREEN BUILDING NOTES

1 Conduct Pre-construction Green Building Conference.

2 Provide Construction Waste Management Plan for 65% Recycling Job Site Construction & Demolition Waste.

3 This project does not include any Fencing.

4 Donate Unused materials.

5 Protect annular spaces around openings in plates at exterior wall per Cal Green sec. 4.505.2.

6 Substitution of solid sawn lumber with engineered lumber for Structural Beams and Headers including non-structural Headers is acceptable. Acquire final approval by Architect & Structural Engineer where applicable.

7 Substitution of Plywood with OSB for sheathing is acceptable. Acquire final approval by Architect & Structural Engineer where applicable.

8 Provide ENERGY STAR rated appliances, typical, provide cut sheets for inspector verification

9 Install built-in recycling center in Kitchen cabinetry.

10 Install Insulation after building is Weather-Tight and outside of the rainy season. Insulation shall be recycled-content, formaldehyde-free fiberglass insulation.

11 Insulate all hot water pipes.

12 Check moisture content materials for walls & floor before enclosure.

13 Cover duct openings/air distribution openings during construction. Clean ducts before occupancy. Use duct mastic on all duct joints.

14 Use Low / No VOC, water based products and solvent-free adhesives and sealers. Install Low VOC carpet systems (where applicable).

15 Develop Homeowner Manual including Green Measures & Benefits.

FIRE DEPARTMENT NOTES

These plans are in compliance with the California Building and Fire Codes (2019 edition) and Santa Clara County Central Fire Protection District Amendments.

Occupancy Classification	R-3 / U
Building Construction	V-B
Fire Rating	Non-Sprinklered
SRA	High

1 The structure is situated within the boundaries of the State Responsibility Area (SRA) and is subject to the requirements contained in CBC Chapter 7-A for construction within the Wildland Interface.

2 Building numbers shall be provided. Numbers shall be a minimum of six (6) inches in height on a contrasting background and visible from the street. Where numbers are not visible from the street, additional numbers shall be installed on a directional sign at the property driveway and the street.

3 Roof coverings shall be no less than Class "B" fire rated roof.

4 Install smoke detectors per CBC sections 907.2.10.1.1 & CRC R 314

5 Install carbon-monoxide detectors per CBC 420 & CRC R 315.2

6 Maintain a 30-foot clearance with non-combustible vegetation around all structures.

7 Electric gates shall be equipped with KNOX key entry system.

8 Job copies of the building and fire system plans and permits must be on-site during inspection.

9 As a condition of submittal of these plans, the submitter, designer and installer certify that these plans and details comply with applicable Specifications, Standards, Codes and Ordinances agree that they are solely responsible for compliance with applicable Specifications, Standards, Codes and Ordinances, and further agree to correct any deficiencies noted by this review, subsequent review, inspection or other source and, to hold harmless and without prejudice, the reviewer and reviewing agency.

Wildland Urban Interface Construction Codes and Standards

Roofs and Roof Edges CBC 705A.1 / CRC R337.5
A non-combustible (tile or metal) or Class "A" roofing assembly is required in SRA – very high fire hazard severity zones. All other areas require Class "B" minimum roof assembly including LRA, SRA-moderate, & SRA-high areas.

Where the roof profile allows a space between the roof covering and tire roof decking, the spaces shall be constructed to prevent the intrusion of flames or embers, be fired stopped with approved materials, or have layer of No. 72 cap sheet installed over the combustible decking. Where provided, valley flashing must be not less than 26 gauge galvanized sheet metal over a 36-inch wide No. 72 ASTM cap sheet. Roof gutters shall be provided with non-combustible gutter guards to prevent the accumulation of leaves and debris in the gutter.

Exterior Walls / Siding CBC 707A.3 / CRC R337.8
Noncombustible, listed ignition-resistant materials, heavy timber, 5/8" Type X gypsum sheathing behind exterior covering, exterior portion of one-hour assembly or log wall construction is allowed. Note: Ignition-resistive materials are those tested by the SFM or ICC-Evaluation Service to have a flame spread rating not over 25, and comply with accelerated weathering tests.

Eaves and Porch Ceilings CBC 707A.4, A.6 / CRC R327.7.4 R327.7.6
The exposed roof deck under enclosed eaves and the underside of porch ceilings shall be non-combustible, listed ignition-resistant materials, or 5/8" type X gypsum sheathing behind exterior coverings. Solid wood rafter tails on the exposed underside of roof eaves having a minimum 2" nominal Dimension may be permitted.

Vents CBC 706A / CRC R337.6
Attic vents and under-floor vent openings must resist the intrusion of flames and embers or shall be a minimum of 1/16" and maximum 1/8" corrosion-resistant, non-combustible wire mesh or equivalent. Combustible vents of the top of roofs must be covered with this material to comply. Ventilation openings on the underside of eaves are not permitted, unless the SFM approved vent is installed, or the eaves are fire sprinklered, or vents are 12 feet above a walking surface or grade below.

Windows and Exterior Doors CBC 708A / CRC R337.8
Windows must be insulated glass with a minimum of 1 tempered pane exterior, or be 20 minute rated, or glass block. Exterior doors must be non-combustible, of ignition resistant materials, or 1-3/8" solid core, or have a 20-minute fire resistant rating.

Exterior Decking and Stairs CBC 709A / CRC R337.9
Walking surfaces of decks, porches, balconies, and stairs within 10 ft. of the building must be constructed of non-combustible, fire-retardant treated, of heavy-timber construction. Alternate materials can be used if they are ignition-resistant and pass performance requirements specified by the State Fire Marshal.

Under-floor and Appendages CBC 707A.8 / CRC R337.7.7 & R337.7.8
Exposed under-floors, underside of cantilevered or overhanging decks, balconies, and similar appendages shall be non-combustible, ignition-resistant, 5/8"-Type X gypsum sheathing behind exterior coverings, exterior portion of 1-hour assembly, meet performance criteria SFM Standard 12-7A-3 or be enclosed to grade.

APPLICABLE CODES

ALL WORK INDICATED ON THE PLANS SHALL COMPLY WITH THE FOLLOWING GOVERNING CODES:

2019 CALIFORNIA BUILDING CODE
2019 CALIFORNIA RESIDENTIAL CODE
2019 CALIFORNIA ELECTRICAL CODE
2019 CALIFORNIA PLUMBING CODES
2019 CALIFORNIA MECHANICAL CODE
2019 CALIFORNIA ENERGY CODE
2019 CALIFORNIA GREEN BUILDING STANDARDS CODE
2019 CALIFORNIA FIRE CODE
SANTA CLARA COUNTY MUNICIPAL & FIRE CODE

PROJECT CONSULTANTS

ARCHITECT	Michael Helm, Architect Michael Helm & Associates 200 Seventh Ave., #110 Santa Cruz, CA 95062 831-476-5386
STRUCTURAL	George Reynolds, S. E. 111 Youngiove Ave. Santa Cruz, CA 95060 831-426-9827
ENERGY	Monterey Energy Group 26465 Carmel Rancho Blvd., #8 Carmel, CA 93923 831-372-8328
REHS	Myer Engineering, Inc. 1796 Laurel Glen Road Soquel, CA 95073 831-600-2244
LANDSCAPE	Thomas Scherer Associates P.O. Box 68 Aptos, CA 95001 831-688-8913
SOILS	C2 Earth 750 Camden Ave., STE A Campbell, CA 95008 408-869-5436

ALL SOILS WORK AND FOUNDATION PLACEMENT SHALL COMPLY WITH THE RECOMMENDATIONS IN THE GEOTECHNICAL INVESTIGATION BY C2EARTH, PROJECT NO. 21137C-01R1, DATED JULY 29, 2022.

SHEET INDEX

1 COVER SHEET
2 SITE PLAN – OVERALL
3 SITE PLAN – DETAILED

4 EXISTING - HOUSE LOWER FLOOR PLAN
5 EXISTING - HOUSE MAIN FLOOR PLAN
6 EXISTING - HOUSE EXTERIOR ELEVATIONS

7 PROPOSED – HOUSE LOWER FLOOR PLAN
8 PROPOSED – HOUSE MAIN FLOOR PLAN
9 PROPOSED - HOUSE UPPER FLOOR PLAN
10 PROPOSED – HOUSE EXTERIOR ELEVATIONS
11 PROPOSED – HOUSE EXTERIOR ELEVATION & BUILDING SECTION
12 HOUSE - LOWER / UPPER FLOOR ELECTRICAL SCHEMATIC PLAN
13 HOUSE - MAIN FLOOR ELECTRICAL SCHEMATIC PLAN
14 HOUSE – FOUNDATION / FLOOR FRAMING PLAN
15 HOUSE – UPPER FLOOR / ROOF FRAMING PLAN
16 CONSTRUCTION DETAILS

17 EXISTING & PROPOSED – GARAGE / SHOP / MUSIC & GUEST FLOOR PLANS
18 GARAGE / SHOP / ADU- EXTERIOR ELEVATIONS
19 GARAGE / SHOP / ADU - ELECTRICAL SCHEMATIC PLANS
20 GARAGE / SHOP / ADU – FOUNDATION / FLOOR / ROOF FRAMING
21 CONSTRUCTION DETAILS

22 POOL CABANA - FLOOR PLAN / ELEVATIONS / ELECTRICAL SCHEMATIC PLAN
23 POOL CABANA – FOUNDATION / ROOF FRAMING PLANS

24 ARCHITECTURAL SPECIFICATIONS
25 STRUCTURAL SPECIFICATIONS & NOTES
26 STANDARD CONSTRUCTION DETAILS

27 TITLE 24 – ENERGY COMPLIANCE FORMS
28 TITLE 24 – LOW-RISE RESIDENTIAL MANDATORY MEASURES SUMMARY

29 GREEN BUILDING STANDARDS CODE

PROJECT DATA

APN	537-12-012
ADDRESS	14500 Arnerich Hill Road, Los Gatos, CA
OWNER	Robert & Katrina Renfrew 14500 Arnerich Hill Road Los Gatos, CA 95070 650-440-3231
ZONING	RHS-20s-d1
OCCUPANCY	R-3/U
CONST. TYPE	V-B
FIRE RATING	Non-Sprinklered
SRA	High
PARCEL SIZE	390,298 SF = 9 Acres

BUILDING AREA

	EXISTING	PROPOSED
HOUSE - HEATED AREA		
HOUSE - (E) LOWER FLOOR	1387.27	1387.27
HOUSE - (E) MAIN FLOOR	3677.81	3677.81
HOUSE - (P) UPPER FLOOR	0	1078.62
TOTAL HEATED AREA	5065.08 SF	6143.7 SF
(P) ADU	0	700 SF
UN-HEATED AREA	EXISTING	PROPOSED
GARAGE	840	1121
SHOP	0	350
STORAGE	0	350
POOL CABANA	0	306
TOTAL UN-HEATED AREA	840 SF	2127 SF
HOUSE – (E) COV. PORCHES	374	374 SF

FLOOR AREA RATIO (E) 6279.08 + (P) 3065.62 = 9344.7 SF / 390,298 SF = 2.3%

LOT COVERAGE

LOCATION	EXISTING	PROPOSED
HOUSE	4238.69	4238.69
GARAGE	840	1121
SHOP + STORAGE	0	700
POOL	1000	1000
POOL CABANA	0	756
TOTAL LOT COVERAGE	6078.69 SF	7534.69 SF

Areas disrupted during Construction shall be restored to be consistent with native vegetation species and patterns.

PROJECT DESCRIPTION

This project consists of remodelling an existing 5,065 SF Single Family Dwelling and constructing a **new upper floor 3 bedroom, 3 bathroom addition of approximately 1,078 SF,** resulting in a 5 bedroom, 6 bath SFD of approximately 6,143 SF.

This project consists of remodelling an existing 840 SF detached 3-car garage and constructing an **additional garage bay of approximately 281 SF,** resulting in a 4-car garage of approximately 1121' SF.

This project consists of a **new ground floor shop addition of approximately 350 SF and storage addition of approximately 350 SF** to the rear of the existing garage with a **new upper floor ADU of approximately 700 SF** that includes a music/guest room with bathroom.

This project consists of a **new detached accessory structure for a non-heated pool cabana of approximately 756 SF** that includes of a covered sitting area, bathroom, mechanical/storage room and outdoor kitchen with BBQ.

All construction will be predominately of wood frame and WUI compliant.

STORMWATER MANAGEMENT & MAINTENANCE AGREEMENT NOTES

OWNER CONSENTS AND AGREES TO INSPECT AND MAINTAIN ANNUALLY 'PRIOR TO THE RAINY SEASON' THE ON-SITE DRAINAGE SYSTEMS AND STORMWATER MANAGEMENT FACILITIES ON THE SUBJECT PROPERTY.

MAINTENANCE SCHEDULE FOR ON-SITE DRAINAGE SYSTEMS AND STORMWATER MANAGEMENT FACILITIES

1 ROOF GUTTERS AND DOWNSPOUTS – SHALL BE CLEANED AS REQUIRED PRIOR TO RAINY SEASON ANNUALLY

2 PERCOLATION TRENCHES – INSPECT VIA CLEAN-OUTS / INSPECTION PORTS, DRAIN PIPES AND OVERFLOW RISERS PRIOR TO THE RAINY SEASON ANNUALLY TO ASSURE DRAINAGE PERCOLATION SYSTEMS FUNCTIONS PROPERLY

THERE ARE NO EXISTING STORMWATER (DRAINAGE) ISSUES ON OR NEAR THE SITE AND THERE ARE NO STORMWATER (DRAINAGE) ISSUES ANTICIPATED RESULTING FROM THE PROPOSED IMPROVEMENTS

Santa Clara County EBBUILD Determination and Points Allocation [1]

A. Existing Residence

1a Footings[3]	Existing L.F.[2]	New/modified or Removed L.F.	Ratio	Maximum Points	Resulting Points
	455	82	.18		5
1b Slab - structural slabs and basement areas	Existing Area	Replaced/ Modified Area	Ratio		
Subtotal	1387	0	0.00	25	0
2 Walls - interior and exterior in linear feet[4]	Existing L.F.[2]	New/modified or Removed L.F.	Ratio	Maximum Points	Resulting Points
	428.5	90.5	.21	50	11
3 Roof[5]	Existing S.F.	New, replaced, altered or removed Roof S.F.	Ratio	Maximum Points	Resulting Points
	4238	1078	.25	25	7
Existing Residence Subtotal					23

B. Proposed Additions

	Area in S.F.	Ratio 1 pt/ 40 S.F.[6]	Sub-Total Points	
First floor and upper story additions[6,7]	1078	26.95	27	
C. Cumulative rebuild points from permits issued within last 2 years:				0
TOTAL POINT ALLOCATION[8]				50

Footnotes:
1 SCC County Ordinance # NS-1100.113
2 LF= Lineal feet measured to outside face of wall or footing. Lengths of intersecting walls or footings at corners may not be double counted.
3 Lineal feet of rectangular footings shall be taken on the longest length. Lineal feet of walls shall be taken at the footing or bearing walls.
4 All non-bearing & bearing walls (including framed openings) measured along the double top plate. Includes walls removed to interior house and addition. Modified walls are walls where the double top plates are altered, the greatest length of either new/modified or demolished walls shall be used
5 Includes all conforms framing, eaves, rakes, attached outdoor covered areas enclosed by more than 50% of the perimeter and substantial changes to roof framing (i.e. going from a flat ceiling to vaulted ceiling) that substantially changes the roof structural system.
6 Only applies to additions, removal of existing roof structures both count, unless the existing roof framing is to remain in place as part of or under the newest story addition.
7 Additions great than 2000 sq. ft are automatically considered a rebuild, regardless of the points enumulated due to work on the existing structure.
8 Any remaining fraction of points shall be considered one (1) whole point.
9 **The project will be classified as a "REBUILD" if the total points exceed 50.**

Michael Helm, AIA Architect & Associates
200 Seventh Avenue, #110 Santa Cruz, California 95062 (831) 476-5386

1 11-28-22 MH

REMODEL & ADDITIONS TO THE:
RENFREW RESIDENCE
14500 ARNERICH HILL ROAD – APN 537-12-012
LOS GATOS, CALIFORNIA

COVER SHEET

11-14-22
NTS
MH
2108

1

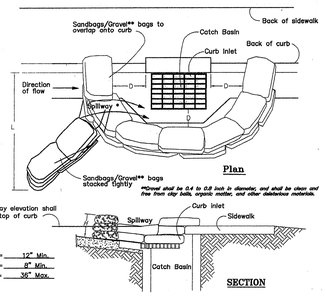

Notes:

1. *Catch Basin/Inlet protection shall be installed wherever there is a potential of stormwater or non-stormwater being discharged into it.*
2. *Inlet protection is required along with other pollution prevention measures such as; erosion control, soil stabilization, and measures to prevent tracking onto paved surfaces.*
3. *Modify inlet protection as needed to avoid creating traffic hazards.*
4. *Include inlet protection measures at hillside v-ditches and misc. drainage swales.*
5. *Inlet protection shall be inspected and accumulated sediments removed. Sediment shall be disposed of properly and in a manner that assures that the sediment does not enter the storm drain system*
6. *Damaged bags shall be replaced immediately.*
7. *Additional sandbag sediment traps shall be placed at intervals as indicated on site plan.*

(A) CATCH BASIN/INLET PROTECTION

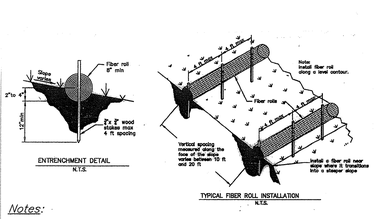

Notes:

Stockpile management procedures and practices are designed to reduce or eliminate air and storm water pollution from stockpiles of soil, and paving materials such as portland cement concrete (PCC) rubble, asphalt concrete (AC), asphalt, concrete rubble, aggregate base, aggregate subbase or pre-mixed aggregate, asphalt binder (i.e. cold mix) and pressure treated wood.

Notes:

1. *Protection of stockpiles is a year-round requirement.*
2. *Locate stockpiles a minimum of 50 feet away from concentrated flows of storm water, drainage courses, and drain inlets.*
3. *Implement wind erosion/transport control practices as appropriate.*
4. *All stockpiles shall be covered, stabilized, or protected with a temporary linear barrier (i.e. sandbags, etc.) prior to the onset of precipitation.*

(E) MATERIAL STORAGE



Notes:

1. *Excess and waste concrete shall not be washed into the street or into a drainage system.*
2. *For washout of concrete and mortar products, a designated containment facility of sufficient capacity to retain liquid and solid waste shall be provided on site and disposed of properly off site.*
3. *Slurry from concrete and asphalt saw cutting shall be vacuumed or contained, dried, picked up and disposed of properly.*

(F) CONCRETE WASTE MANAGEMENT

Notes:

1. *Place along the toe, top, face, and at grade breaks of exposed and erodible slopes.*
2. *Place on the down-slope of exposed soil areas.*
3. *Place around temporary stockpiles.*
4. *Place along the perimeter of a project.*
5. *Slopes greater than 1:5 may require the use of 20 inch diameter fiber rolls at the top of slopes.*
6. *Fiber rolls shall be either prefabricated or rolled tubes of erosion control blankets with a minimum 9 inch diameter.*
7. *Slopes 1:4 or flatter require fiber rolls to be placed no more than 20 feet apart.*
8. *Slopes 1:4 to 1:2 require fiber rolls to be placed no more than 15 feet apart.*
9. *Slopes 1:2 or greater require fiber rolls to be placed no more than 10 feet apart.*
10. *Fiber rolls shall be placed in a 2 to 4 inch deep trench.*
11. *Wooden commercial grade stakes, 1" x 1½" shall be used to secure the fiber rolls to the ground surface. Stakes shall be a minimum length of 24 inches and driven a minimum of 12 inches.*
12. *A single-stake installation requires the stakes to be placed no more than 2 feet apart.*
13. *If more than one fiber roll is placed in a row, the rolls shall be overlapped, not abutted, a minimum of 1 foot.*

(I) FIBER ROLL

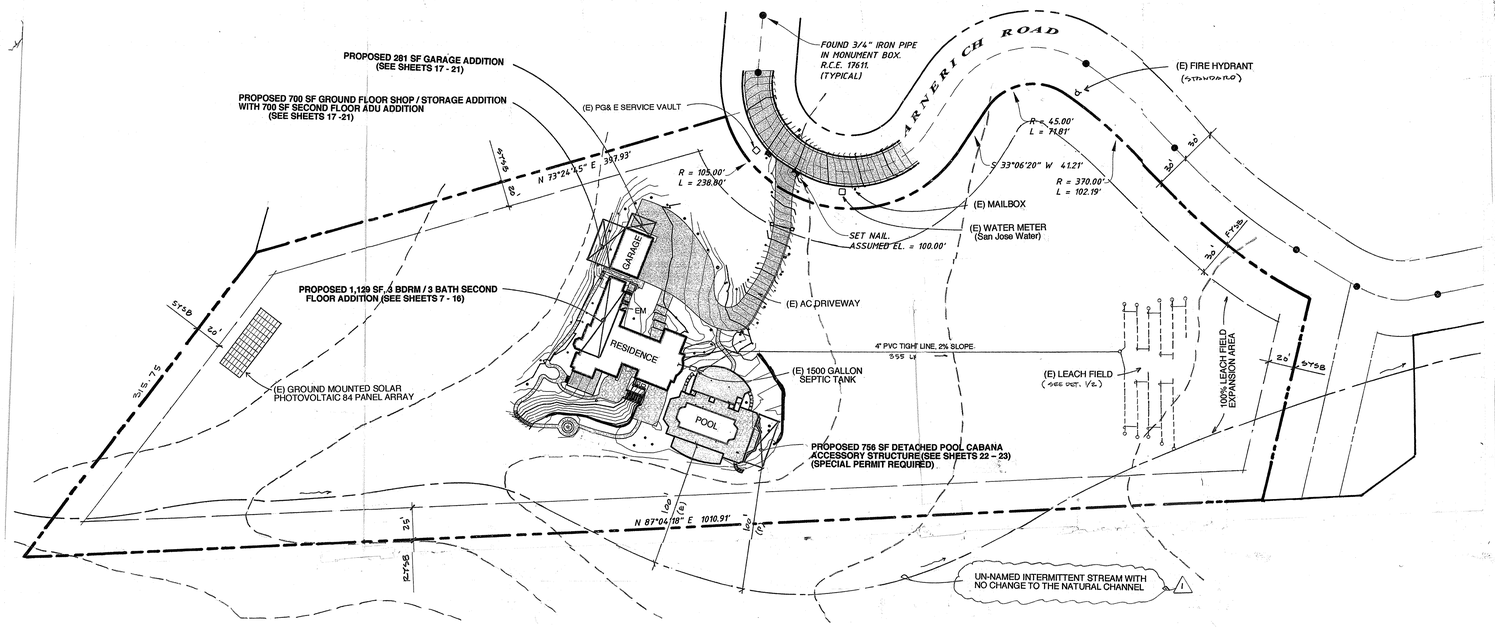

SITE PLAN – OVERALL

SCALE: 1" = 50' - 0"

GRAPHIC SCALE

50' 0' 50' 100'

1 INCH = 50 FEET

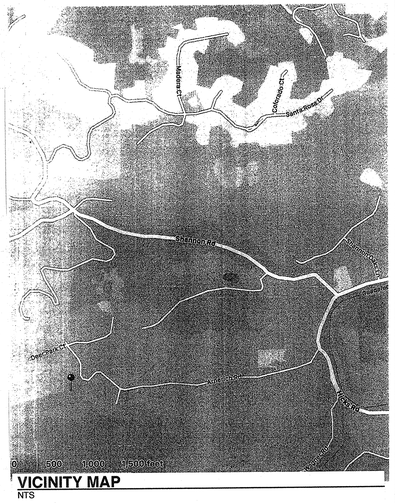

VICINITY MAP

NTS

PROJECT DATA

APN	537-12-012
ADDRESS	14500 Arnerich Hill Road, Los Gatos, CA
OWNER	Robert & Katrina Renfrew 14500 Arnerich Hill Road Los Gatos, CA 95070 650-440-3231
ZONING	RHS-20s-d1
OCCUPANCY	R-3/U
CONST. TYPE	V-B
FIRE RATING	Non-Sprinklered
SRA	High
PARCEL SIZE	390,298 SF = 9 Acres

BUILDING AREA

HOUSE - HEATED AREA	EXISTING	PROPOSED
HOUSE - (E) LOWER FLOOR	1387.27	1387.27
HOUSE - (E) MAIN FLOOR	3677.81	3677.81
HOUSE - (P) UPPER FLOOR	0	1078.62
TOTAL HEATED AREA	5065.08 SF	6143.7 SF
(P) ADU	0	700 SF
UN-HEATED AREA	EXISTING	PROPOSED
GARAGE	840	1121
SHOP	0	350
STORAGE	0	350
POOL CABANA	0	306
TOTAL UN-HEATED AREA	840 SF	2127 SF
HOUSE – (E) COV. PORCHES	374	374 SF

FLOOR AREA RATIO (E) 6279.08 + (P) 3065.62 = 9344.7 SF / 390,298 SF = 2.3%

LOT COVERAGE

LOCATION	EXISTING	PROPOSED
HOUSE	4238.69	4238.69
GARAGE	840	1121
SHOP + STORAGE	0	700
POOL	1000	1000
POOL CABANA	0	756
TOTAL LOT COVERAGE	6078.69 SF	7534.69 SF

Areas disrupted during Construction shall be restored to be consistent with native vegetation species and patterns.

EROSION CONTROL NOTES

1 Erosion control planting or permanent landscaping shall be completed by October 15.

2 Permanent landscape areas require auto- irrigation.

3 Hydro-mulching is the best effective seeding method for large areas. Best time for planting is September-October, unless there is a sprinkler system.

4 Broadcast is approved for small areas. In this case apply fertilizer before seeding, after seeding apply straw or hay mulch.

5 Apply erosion control material on all drainage swales, cuts and fill, also any location where any existing vegetation has been removed.

6 If mulching, seeding, or fertilizing manually, mulch with straw or hay at 4000 lbs/acre. Fertilize with Ammonium Phosphate with Sulphur (16-20-0) at 350 lbs/acre. If Hydro-mulching, use wood fiber mulch at 2000 lbs/acre.

GRASS/LEGUME SEED MIX FOR EROSION CONTROL

Seed Mix	Rate of Application
Blando Brome	15 lbs/acre
Rose Clover	12 lbs/acre
Zorro Annual Feacue	3 lbs/acre
Creeping Red Feacue	5 lbs/acre
Apply seed mix as rate of	35 lbs/acre or 8 lbs/ 10,000 Sq. Ft. or 3/ lbs/ 1000 Sq. Ft.
Fertilizer (16-20-0)	350 lbs/acre or 8 lbs/1000 Sq. Ft.

Construction Materials

- All loose stockpiled construction materials that are not actively being used (i.e. soils, aggregate, fly-ash, stucco, hydrated lime, etc.) shall be covered and bermed.
- All chemicals shall be stored in watertight containers (with appropriate secondary containment to prevent any spillage or leakage) or in a storage shed (completely enclosed).
- Exposure of construction materials to precipitation shall be minimized. This does not include materials and equipment that are designed to be outdoors and exposed to environmental conditions (i.e. poles, equipment pads, cabinets, conductors, insulators, bricks, etc.).
- Best Management Practices to prevent the off-site tracking of loose construction and landscape materials shall be implemented.

Waste Management

- Disposal of any rinse or wash waters or materials on impervious or pervious site surfaces or into the storm drain system shall be prevented.
- Sanitation facilities shall be contained (e.g., portable toilets) to prevent discharges of pollutants to the storm water drainage system or receiving water, and shall be located a minimum of 20 feet away from an inlet, street or driveway, stream, riparian area or other drainage facility.
- Sanitation facilities shall be inspected regularly for leaks and spills and cleaned or replaced as necessary.
- Cover waste disposal containers at the end of every business day and during a rain event.
- Discharges from waste disposal containers to the storm water drainage system or receiving water shall be prevented.
- Stockpiled waste material shall be contained and securely protected from wind and rain at all times unless actively being used.
- Procedures that effectively address hazardous and non-hazardous spills shall be implemented.
- Equipment and materials for cleanup of spills shall be available on site and that spills and leaks shall be cleaned up immediately and disposed of properly; and
- Concrete washout areas and other washout areas that may contain additional pollutants shall be contained so there is no discharge into the underlying soil and onto the surrounding areas.

Vehicle Storage and Maintenance

- Measures shall be taken to prevent oil, grease, or fuel to leak in to the ground, storm drains or surface waters.
- All equipment or vehicles, which are to be fueled, maintained and stored onsite shall be in a designated area fitted with appropriate BMPs.
- Leaks shall be immediately cleaned and leaked materials shall be disposed of properly.

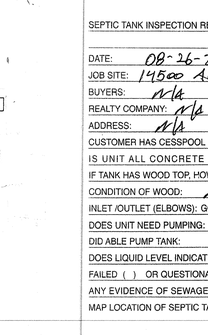

(1) EXISTING SEPTIC SYSTEM DETAIL

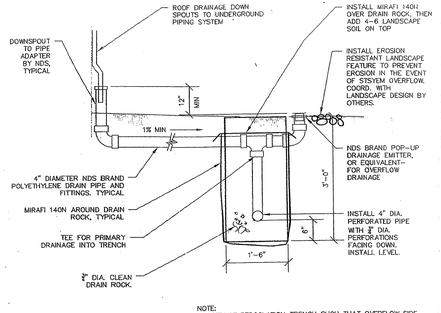

NOTE:
CONSTRUCT PERCOLATION TRENCH SUCH THAT OVERFLOW SIDE IS LEVEL, OR SLOPED AT 2% MAX IN ORDER TO PREVENT CONCENTRATED FLOW IN THE EVENT OF SYSTEM OVERFLOW.

(2) DOWNSPOUT TO PERCOLATION TRENCH

ABLE SEPTIC TANK SERVICE
Lic.# 607475

1020 Ruff Drive
San Jose, California 95110
Office (408) 377-9990
Fax (408) 492-1008
24 Hour Emergency Service
(408) 398-4990

SEPTIC TANK INSPECTION REPORT

DATE:	08-26-22	INVOICE NO:	66774
JOB SITE:	14500 Arnerich Rd. Los Gatos, Ca. 95032		
BUYERS:	N/A	OWNERS:	Rob & Katrina Renfrew
REALTY COMPANY:	N/A	AGENT: N/A	PHONE: N/A
ADDRESS:	N/A		FAX: N/A
CUSTOMER HAS CESSPOOL ( )	SUMP ( )	SEPTIC TANK ☒	
IS UNIT ALL CONCRETE ☒	CONCRETE WITH WOOD ( )	TANK ALL WOOD ( )	
IF TANK HAS WOOD TOP, HOW MANY LAYERS:	N/A	ONE ( )	TWO ( )
CONDITION OF WOOD:	N/A	GOOD ( )	FAIR ( ) ROTTEN ( )
INLET /OUTLET (ELBOWS): GOOD ☒	IF BAD/BROKEN WHICH:	INLET ( )	OUTLET ( )
DOES UNIT NEED PUMPING: YES (☒)	NO ( )	ESTIMATED GALLONS:	1,500
DID ABLE PUMP TANK: YES (☒)	NO ( )	DATE PUMPED:	08-26-22

DOES LIQUID LEVEL INDICATE LEECHING APPEARS TO BE IN WORKING ORDER: YES ☒

FAILED ( ) OR QUESTIONABLE ( )

ANY EVIDENCE OF SEWAGE OR SEWER WATER BREAKING OUT OF GROUND: YES ( ) NO ☒

MAP LOCATION OF SEPTIC TANK: Septic Tanks ↘ Front of House ↓

COMMENTS, IF ANY: *THIS IS NO GUARANTEE ON HOW LONG SYSTEM WILL LAST

Septic tanks is in working condition. Leach field passed 30 minute water test. As of 08-26-22 at 10:30 A.M. Septic tanks passe inspection.

REPORT COMPLETED BY: Chris Bitterwolf

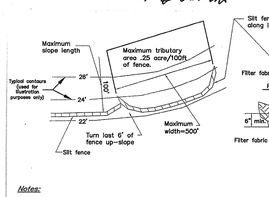

Notes:

1. *Construct the silt fence along a level contour.*
2. *Silt fences shall remain in place until the disturbed area is permanently stabilized.*
3. *Provide sufficient room for runoff to pond behind the fence and allow sediment removal equipment to pass between the silt fence and toe of slope or other obstructions. About 1200 sq. ft. of ponding area shall be provided for every acre draining to the fence.*
4. *Turn the ends of the filter fence uphill to prevent stormwater from flowing around the fence.*
5. *Leave an undisturbed or stabilized area immediately downslope from the fence.*
6. *Do not place in live stream or intermittently flowing channels.*
7. *When standard filter fabric is used, a wire mesh support fence shall be fastened securely to the upslope side of the posts using heavy-duty (0.6 inch) wire staples at least 1.75 inches long, tie wires or hog rings.*
8. *Filter fabric shall be woven polypropylene geotextile with a minimum width of 36 inches and a minimum tensile strength of 100 lb force.*
9. *Wood stakes shall be commercial quality lumber no less than 2 inch by 2 inch. Wood stakes shall be driven to a depth of no less than 18 inches from surface.*

(H) SILT FENCE

STANDARD BEST MANAGEMENT PRACTICE NOTES

1. Solid and Demolition Waste Management: Provide designated waste collection areas and containers on site away from streets, gutters, storm drains, and waterways, and arrange for regular disposal. Waste containers must be watertight and covered at all times except when waste is deposited. Refer to Erosion & Sediment Control Field Manual, 4th Edition (page C3) or latest.
2. Hazardous Waste Management: Provide proper handling and disposal of hazardous wastes by a licensed hazardous waste material hauler. Hazardous wastes shall be stored and properly labeled in sealed containers constructed of suitable materials. Refer to Erosion & Sediment Control Field Manual, 4th Edition (pages C-5 to C-6) or latest.
3. Spill Prevention and Control: Provide proper storage areas for liquid and solid materials, including chemicals and hazardous substances, away from streets, gutters, storm drains, and waterways. Spill control materials must be kept on site where readily accessible. Spills must be cleaned up immediately and contaminated soil disposed properly. Refer to Erosion & Sediment Control Field Manual, 4th Edition (pages C-7 to C-8, C-13 to C-14) or latest.
4. Vehicle and Construction Equipment Service and Storage: An area shall be designated for the maintenance, where on-site maintenance is required, and storage of equipment that is protected from stormwater run-on and runoff. Measures shall be provided to capture any waste oils, lubricants, or other potential pollutants and these wastes shall be properly disposed of off site. Fueling and major maintenance/repair, and washing shall be conducted off-site whenever feasible. Refer to Erosion & Sediment Control Field Manual, 4th Edition (page C9) or latest.
5. Material Delivery, Handling and Storage: In general, materials should not be stockpiled on site. Where temporary stockpiles are necessary and approved by the County, they shall be covered with secured plastic sheeting or tarp and located in designated areas near construction entrances and away from drainage paths and waterways. Barriers shall be provided around storage areas where materials are potentially in contact with runoff. Refer to Erosion & Sediment Control Field Manual, 4th Edition (pages C-11 to C-12) or latest.
6. Handling and Disposal of Concrete and Cement: When concrete trucks and equipment are washed on-site, concrete wastewater shall be contained in designated containers or in a temporary lined and watertight pit where wasted concrete can harden for later removal. If possible have concrete contractor remove concrete wash water from site. In no case shall fresh concrete be washed into the road right-of-way. Refer to Erosion & Sediment Control Field Manual, 4th Edition (pages C-15 to C-16) or latest.
7. Pavement Construction Management: Prevent or reduce the discharge of pollutants from paving operations, using measures to prevent run-on and runoff pollution and properly disposing of wastes. Avoid paving in the wet season and reschedule paving when rain is in the forecast. Residue from saw-cutting shall be vacuumed for proper disposal. Refer to Erosion & Sediment Control Field Manual, 4th Edition (pages C-17 to C-18) or latest.
8. Contaminated Soil and Water Management: Inspections to identify contaminated soils should occur prior to construction and at regular intervals during construction. Remediating contaminated soil should occur promptly after identification and be specific to the contaminant identified, which may include hazardous waste removal. Refer to Erosion & Sediment Control Field Manual, 4th Edition (pages C-19 to C-20) or latest.
9. Sanitary/Septic Waste Management: Temporary sanitary facilities should be located away from drainage paths, waterways, and traffic areas. Only licensed sanitary and septic waste haulers should be used. Secondary containment should be provided for all sanitary facilities. Refer to Erosion & Sediment Control Field Manual, 4th Edition (page C-21) or latest.
10. Inspection & Maintenance: Areas of material and equipment storage sites and temporary sanitary facilities must be inspected weekly. Problem areas shall be identified and appropriate additional and/or alternative control measures implemented immediately, within 24 hours of the problem being identified.

STANDARD EROSION CONTROL NOTES

1. Sediment Control Management:

   Tracking Prevention & Clean Up: Activities shall be organized and measures taken as needed to prevent or minimize tracking of soil onto the public street system. A gravel or proprietary device construction entrance/exit is required for all sites. Clean up of tracked material shall be provided by means of a street sweeper prior to an approaching rain event, or at least once at the end of each workday that material is tracked, or, more frequently as determined by the County Inspector. Refer to Erosion & Sediment Control Field Manual 4th Edition (pages B-31 to B-33) or latest.

   Storm Drain Inlet and Catch Basin Inlet Protection: All inlets within the vicinity of the project and within the project limits shall be protected with gravel bags placed around inlets or other inlet protection. At locations where exposed soils are present, staked fiber roles or staked silt fences can be used. Inlet filters are not allowed due to clogging and subsequent flooding. Refer to Erosion & Sediment Control Field Manual, 4th Edition (pages B-49 to B-51) or latest.

   Storm Water Runoff: No storm water runoff shall b allowed to drain in to the existing and/or proposed underground storm drain system or other above ground watercourses until appropriate erosion control measures are fully installed.

   Dust Control: The contractor shall provide dust control in graded areas as required by providing we suppression or chemical stabilization of exposed soils, providing for rapid clean up of sediments deposited on paved roads, furnishing construction road entrances and vehicle wash down areas, and limiting the amount of areas disturbed by clearing and earth moving operations by scheduling these activities in phases.

   Stockpiling: Excavated soils shall not be placed in streets or on paved areas. Borrow and temporary stockpiles shall be protected with appropriate erosion control measures(tarps, straw bales, silt fences, ect.) to ensure silt does not leave the site or enter the storm drain system or neighboring watercourse.
2. Erosion Control: During the rainy season, all disturbed areas must include an effective combination of erosion and sediment control. It is required that temporary erosion control measures are applied to all disturbed soil areas prior to a rain event. During the non-rainy season, erosion control measures must be applied sufficient to control wind erosion at the site.
3. Inspection & Maintenance: Disturbed areas of the Project's site, locations where vehicles enter or exit the site, and all erosion and sediment controls that are identified as part of the Erosion Control Plans must be inspected by the Contractor before, during, and after storm events, and at least weekly during seasonal wet periods. Problem areas shall be identified and appropriate additional and/ or alternative control measures implemented immediately, within 24 hours of the problem being identified.
4. Project Completion: Prior to project completion and signoff by the County Inspector, all disturbed areas shall be reseeded, planted, or landscaped to minimize the potential for erosion on the subject site.
5. It shall be the Owner's/Contractor's responsibility to maintain control of the entire construction operation and to keep the entire site in compliance with the erosion control plan.
6. Erosion and sediment control best management practices shall be operable year round or until vegetation is fully established on landscaped surfaces.

Michael Helm, AIA Architect & Associates
200 Seventh Avenue, #110 Santa Cruz, California 95062 (831) 476-5386

1 11-28-22 MSH

REGISTERED PROFESSIONAL ENGINEER MICHAEL S. HELM C-30-23 CIVIL STATE OF CALIFORNIA

REMODEL & ADDITIONS TO THE
RENFREW RESIDENCE
14500 ARNERICH HILL ROAD - APN 537-12-012
LOS GATOS, CALIFORNIA

SITE PLAN - OVERALL
EROSION CONTROL / BMP'S

11-14-22
1" = 50'-0"
MSH
2108

2

FAR SUMMARY

GROSS LOT AREA (8.96 ACRES)	390,298 SF
NET LOT AREA	390,298
FLOOR AREA CALCULATIONS	
HOUSE – (E) LOWER FLOOR	1387.27
HOUSE – (E) MAIN FLOOR	3677.81
HOUSE – (P) UPPER FLOOR	1078.62
ATTIC, COUNTABLE	N/A
BASEMENT, COUNTABLE	N/A
(E) COVERED PORCHES	374
SUBTOTAL	6517.7 SF
(E) GARAGE	840
(P) GARAGE	281
(P) SHOP	350
(P) STORAGE	350
SUBTOTAL	1821 SF
(P) ADU	700 SF
(P) POOL CABANA (ACCESSORY STRUCTURE)	306 SF
TOTAL	9344.7 SF

FLOOR AREA RATIO (E) 6279.08 + (P) 3065.62 = 9344.7 SF / 390,298 SF = 2.3%

FAR DIAGRAMS AND CALCULATIONS SHOWN ON SHEETS 7, 9, 20 & 22

Basis of Bearings

The basis of bearing for this map is between found monuments along the center line of Arnerich Road per that certain map entitled "Tract 5502", filed in Volume 461 of Maps, at Page 16, Santa Clara County Records.

All distances are in feet and decimals thereof.

Basis of Elevation

An assumed elevation of 100.00 feet was used on a set nail located at the intersection of the drive way of this property and Arnerich Road, and as shown on this map.

The contour interval is 1 foot.

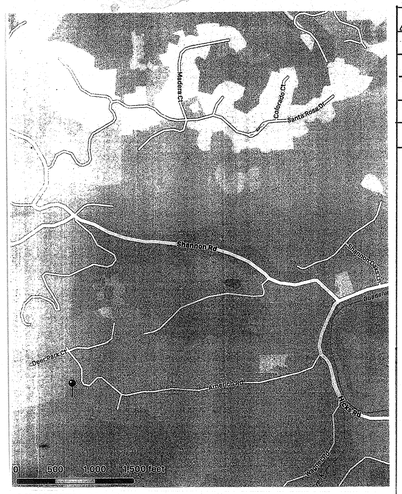

VICINITY MAP

NTS

PROJECT DATA

APN	537-12-012
ADDRESS	14500 Arnerich Hill Road, Los Gatos, CA
OWNER	Robart & Katrina Renfrew 14500 Arnerich Hill Road Los Gatos, CA 95070 650-440-3231
ZONING	RHS-20s-d1
OCCUPANCY	R-3/U
CONST. TYPE	V-B
FIRE RATING	Non-Sprinklered
SRA	High
PARCEL SIZE	390,298 SF = 9 Acres

BUILDING AREA

	EXISTING	PROPOSED
HOUSE - HEATED AREA		
HOUSE - (E) LOWER FLOOR	1387.27	1387.27
HOUSE - (E) MAIN FLOOR	3677.81	3677.81
HOUSE - (P) UPPER FLOOR	0	1078.62
TOTAL HEATED AREA	5065.08 SF	6143.7 SF
(P) ADU	0	700 SF
UN-HEATED AREA	EXISTING	PROPOSED
GARAGE	840	1121
SHOP	0	350
STORAGE	0	350
POOL CABANA	0	306
TOTAL UN-HEATED AREA	840 SF	2127 SF
HOUSE – (E) COV. PORCHES	374	374 SF

FLOOR AREA RATIO (E) 6279.08 + (P) 3065.62 = 9344.7 SF / 390,298 SF = 2.3%

LOT COVERAGE

LOCATION	EXISTING	PROPOSED
HOUSE	4238.69	4238.69
GARAGE	840	1121
SHOP + STORAGE	0	700
POOL	1000	1000
POOL CABANA	0	756
TOTAL LOT COVERAGE	6078.69 SF	7534.69 SF

Areas disrupted during Construction shall be restored to be consistent with native vegetation species and patterns.

PROJECT DESCRIPTION

This project consists of remodeling an existing 5,065 SF Single Family Dwelling and constructing a **new upper floor 3 bedroom, 3 bathroom addition of approximately 1,078 SF**, resulting in a 5 bedroom, 6 bath SFD of approximately 6,143 SF.

This project consists of remodeling an existing 840 SF detached 3-car garage and constructing an **additional garage bay of approximately 281 SF**, resulting in a 4-car garage of approximately 1121 SF.

This project consists of a **new ground floor shop addition of approximately 350 SF and storage addition of approximately 350 SF** to the rear of the existing garage with a **new upper floor ADU of approximately 700 SF** that includes a music/guest room with bathroom.

This project consists of a **new detached accessory structure for a non-heated pool cabana of approximately 756 SF** that includes of a covered sitting area, bathroom, mechanical/storage room and outdoor kitchen with BBQ.

All construction will be predominately of wood frame and WUI compliant.

GRADING NOTES

1 EXCAVATED MATERIAL SHALL BE PLACED IN THE FILL AREAS DESIGNATED OR SHALL BE HAULED AWAY FROM THE SITE. WHERE FILL MATERIAL IS TO BE PLACED ON NATURAL GRADE IT SHALL BE STRIPPED OF ALL VEGETATION, TO ACHIEVE PROPER BOND WITH THE FILL MATERIAL. THE SURFACE OF THE GROUND SHALL BE SCARIFIED TO A DEPTH OF 6" BEFORE THE FILL IS PLACED. WHERE NATURAL GROUND IS STEEPER THAN 5:1, IT SHALL BE BENCHED AND THE FILL KEYED IN TO ACHIEVE STABILITY. WHERE NEW FILL IS TO BE PLACED ON EXISTING FILL, THE EXISTING FILL SHALL BE PROVED, UNTIL MATERIAL COMPACTED TO 90% RELATIVE DENSITY IS EXPOSED. THE NEW FILL SHALL BE PLACED PER THESE CONSTRUCTION NOTES. FILL MATERIAL SHALL BE PLACED IN UNIFORM LIFTS NOT EXCEEDING 6" IN COMPACTED THICKNESS. BEFORE COMPACTION BEGINS THE FILL SHALL BE BROUGHT TO A WATER CONTENT THAT WILL PERMIT PROPER COMPACTION BY EITHER (1) AERATING THE FILL IF IT IS TOO WET, OR (2) MOISTENING THE FILL WITH WATER IF IT IS TOO DRY. EACH LIFT SHALL BE THOROUGHLY MIXED BEFORE COMPACTION TO INSURE UNIFORM DISTRIBUTION OF MOISTURE.

2 NO ORGANIC MATERIAL SHALL BE PLACED IN ANY FILL.

3 THE UPPER 12" OF SUB-GRADE BELOW DRIVEWAY OR PARKING AREA SHALL BE COMPACTED TO 95% RELATIVE DENSITY.

4 BUILDING LOCATION AND PAD ELEVATION TO BE DONE BY A LICENSED SURVEYOR OR CIVIL ENGINEER PRIOR TO GRADING.

5 CONTRACTOR TO ARRANGE A PRE-GRADING MEETING WITH THE SANTA CLARA COUNTY INSPECTOR PRIOR TO BEGINNING ANY WORK.

6 NO POTABLE WATER TO BE USED FOR ANY GRADING PURPOSES ON THIS PROJECT.

7 PERMITTED HOURS OF WORK ARE 7:30 AM TO 6:00 PM, MONDAY THROUGH FRIDAY.

8 ALL UTILITIES TO BE UNDERGROUND, TYPICAL. PROVIDE CHECK VALVE ON WATER SERVICE.

ESTIMATED GRADING QUANTITIES

LOCATION	CUT	FILL
DRIVEWAY	8	8
GARAGE/SHOP	108	0
HOUSE	0	0
POOL CABANA	0	6
TOTAL	116 Cu. Yds.	14 Cu. Yds.

Note: 116 Cu. Yds. of CUT is to be off hauled from the site to an approved location.

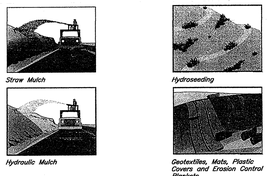
Straw Mulch

Hydroseeding

Hydraulic Mulch

Geotextiles, Mats, Plastic Covers and Erosion Control Blankets

Notes:

1. *Soil/Slope stabilization practices shall be designed to preserve existing vegetation where feasible and to revegetate open areas as soon as feasible after grading. These control practices shall include temporary seeding, permanent seeding, mulching, sod stabilization, vegetative buffer strips, protection of trees, or other soil stabilization practices.*
2. *Soil stabilization shall be implemented on all inactive disturbed areas from October 1 thru May 30 and on all disturbed areas during a rain event or potential rain.*
3. *Stabilization practices shall control/prevent erosion from the forces of wind and water.*
4. *Stabilization practices shall be implemented in conjunction with sediment trapping/filtering practices and practices to reduce the tracking of sediment onto paved roads.*
5. *When using straw mulching, the minimum application shall be 2 tons/acre. Mulch must be anchored immediately to minimize loss by wind or water.*
6. *When using hydroseeding/mulching, the minimum, application of wood fiber shall be 1,500 lbs/acre, that does not contain more than 50 percent newsprint.*
7. *For seeding recommendations, contact: USDA, Natural Resources Conservation Service at 5000 California Avenue, Bakersfield, CA 93309–0725. Phone: (661) 336–0967.*
8. *When using hydraulic mulch, the application shall be between 1 to 2 tons per acre.*
9. *Geotextiles, mats, plastic covers and erosion control blankets should be considered when disturbed soils may be particularly difficult to stabilize.*
10. *For geotextiles, mats, and erosion control blankets, installation should be in accordance with manufactures recommendations. Typically overlap of geotextiles/mats edges is 2 to 3 in. and stapled every 6 in. When blankets are to be spliced, place blankets end–over–end (shingle style) with 6 in. overlap and staple through overlapped area, approximately 12 in. apart.*

(D) EROSION CONTROL

Lots shall be graded to drain surface water away from foundation walls. The grade shall fall a minimum of 6 inches within the first 10 feet. Where lot lines, walls, slopes or other physical barriers prohibit 6 inches of fall within 10 feet, drains or swales shall be constructed to ensure drainage away from the structure.

STORMWATER MANAGEMENT & MAINTENANCE AGREEMENT NOTES

OWNER CONSENTS AND AGREES TO INSPECT AND MAINTAIN ANNUALLY PRIOR TO THE RAINY SEASON THE ON-SITE DRAINAGE SYSTEMS AND STORMWATER MANAGEMENT FACILITIES ON THE SUBJECT PROPERTY.

MAINTENANCE SCHEDULE FOR ON-SITE DRAINAGE SYSTEMS AND STORMWATER MANAGEMENT FACILITIES

1 ROOF GUTTERS AND DOWNSPOUTS – SHALL BE CLEANED AS REQUIRED PRIOR TO RAINY SEASON ANNUALLY.

2 PERCOLATION TRENCHES – INSPECT VIA CLEAN-OUTS / INSPECTION PORTS. DRAIN PIPES AND OVERFLOW RISERS PRIOR TO THE RAINY SEASON ANNUALLY TO ASSURE DRAINAGE PERCOLATION SYSTEMS FUNCTIONS PROPERLY

THERE ARE NO EXISTING STORMWATER (DRAINAGE) ISSUES ON OR NEAR THE SITE AND THERE ARE NO STORMWATER (DRAINAGE) ISSUES ANTICIPATED RESULTING FROM THE PROPOSED IMPROVEMENTS

SITE PLAN – DETAILED

SCALE: 1" = 10' - 0"

GRAPHIC SCALE

10' 0' 10' 20'

1 INCH = 10 FEET

HANAGAN LAND SURVEYING
305-C SOQUEL AVE.
SANTA CRUZ, CA 95062
PHONE (831) 469-3421

Michael Helm, AIA Architect & Associates
200 Seventh Avenue, #110 Santa Cruz, California 95062 (831) 476-5386

1	11.28.22 MSH

REMODEL & ADDITIONS TO THE:
RENFREW RESIDENCE
14500 ARNERICH HILL ROAD, APN 537-12-012
LOS GATOS, CALIFORNIA

SITE PLAN - DETAILED

11-14-22
1" = 10' 0"
MSH
2108

3

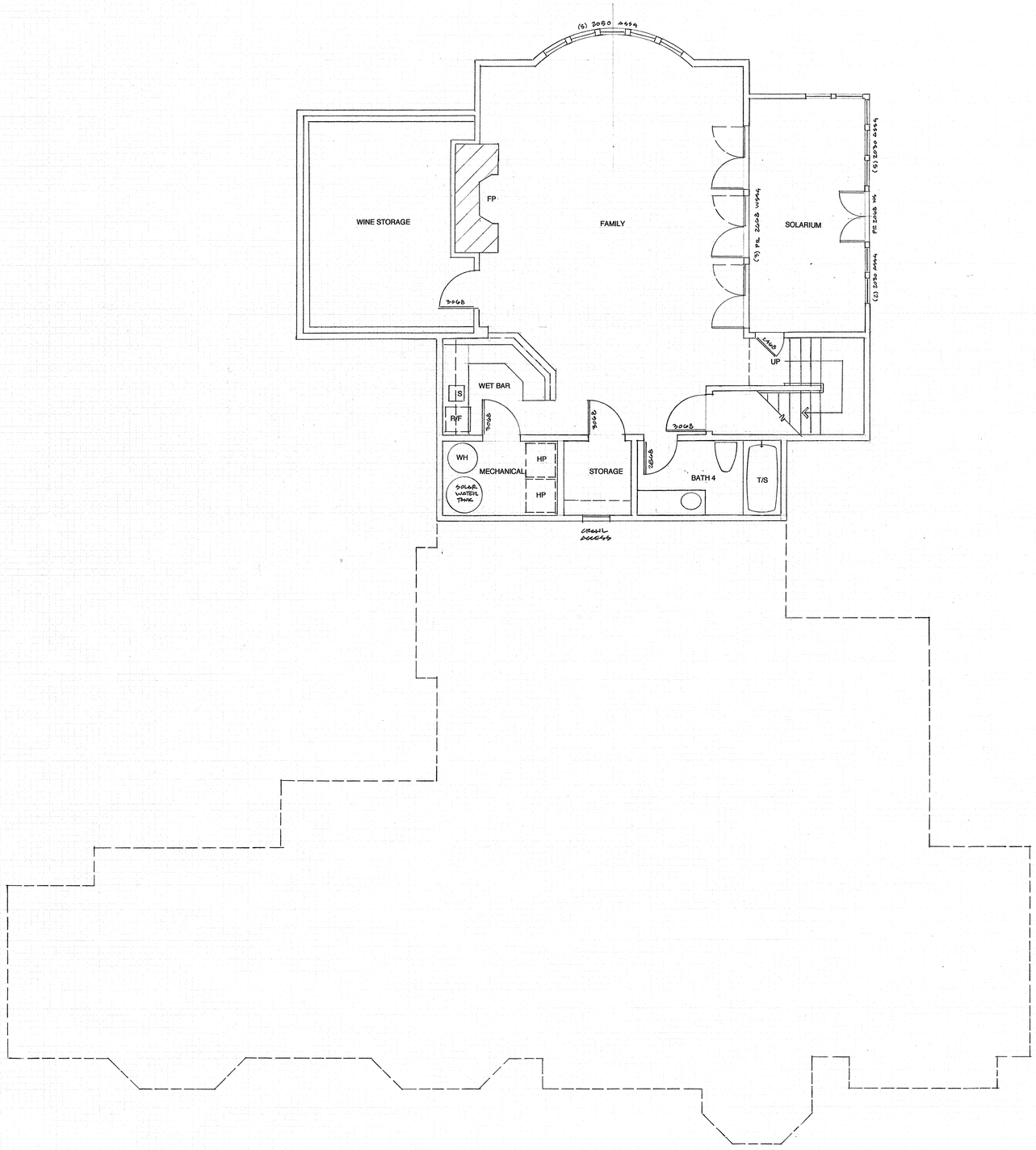

EXISTING – LOWER FLOOR PLAN
SCALE: 1/4" = 1'- 0"

REVISIONS	BY

Michael Helm, AIA Architect & Associates
200 Seventh Avenue, #110 Santa Cruz, California 95062 (831) 476-5386

REMODEL & ADDITIONS TO THE:
RENFREW RESIDENCE
14500 ARNERICH HILL ROAD – APN 537-12-012
LOS GATOS, CALIFORNIA

EXISTING - LOWER FLOOR PLAN

DATE	11.14.22
SCALE	1/4"=1'-0"
DRAWN	MSH
JOB	2108
SHEET	4
OF	SHEETS

DATAPRINT CORP. 700 SO. CLAREMONT ST. SAN MATEO, CA. 94402
STOCKDRAFTING FORM NO. 101-57

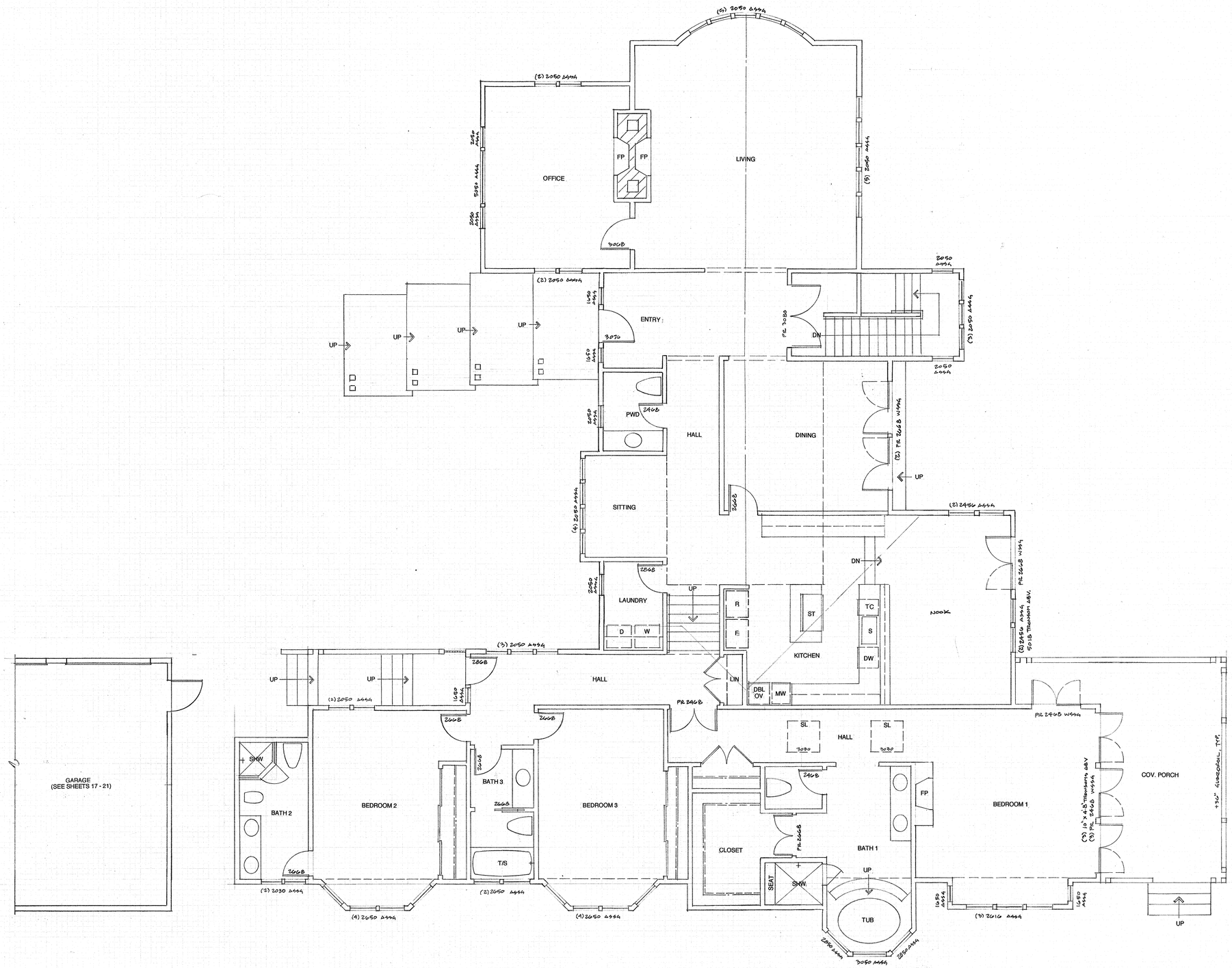

EXISTING – MAIN FLOOR PLAN
SCALE: 1/4" = 1'- 0"

Michael Helm, AIA Architect & Associates
200 Seventh Avenue, #110 Santa Cruz, California 95062 (831) 476-5386

REVISIONS	BY

REMODEL & ADDITIONS TO THE:
RENFREW RESIDENCE
14500 ARNERICH HILL ROAD – APN 537-12-012
LOS GATOS, CALIFORNIA

EXISTING - MAIN FLOOR PLAN

DATE	11.14.22
SCALE	1/4"=1'-0"
DRAWN	MSH
JOB	2108
SHEET	5
OF	SHEETS

SAFEPRINT CORP 709 SO. CLAREMONT ST SAN MATEO, CA 94401
STOCKDRAFTING FORM NO. 101-57

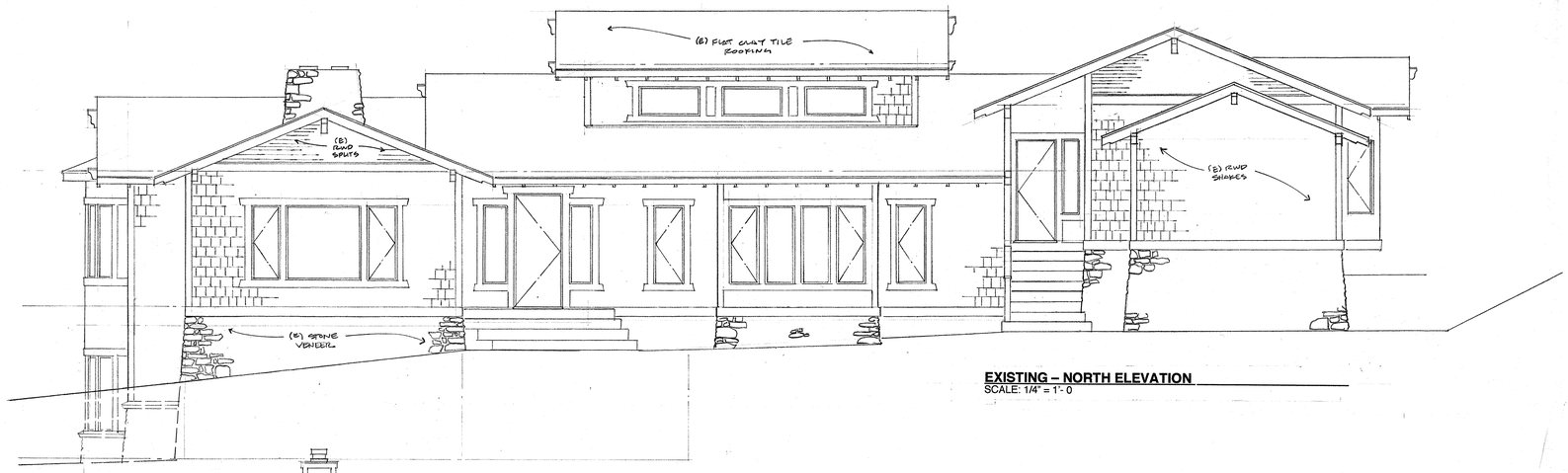

EXISTING – NORTH ELEVATION
SCALE: 1/4" = 1'- 0

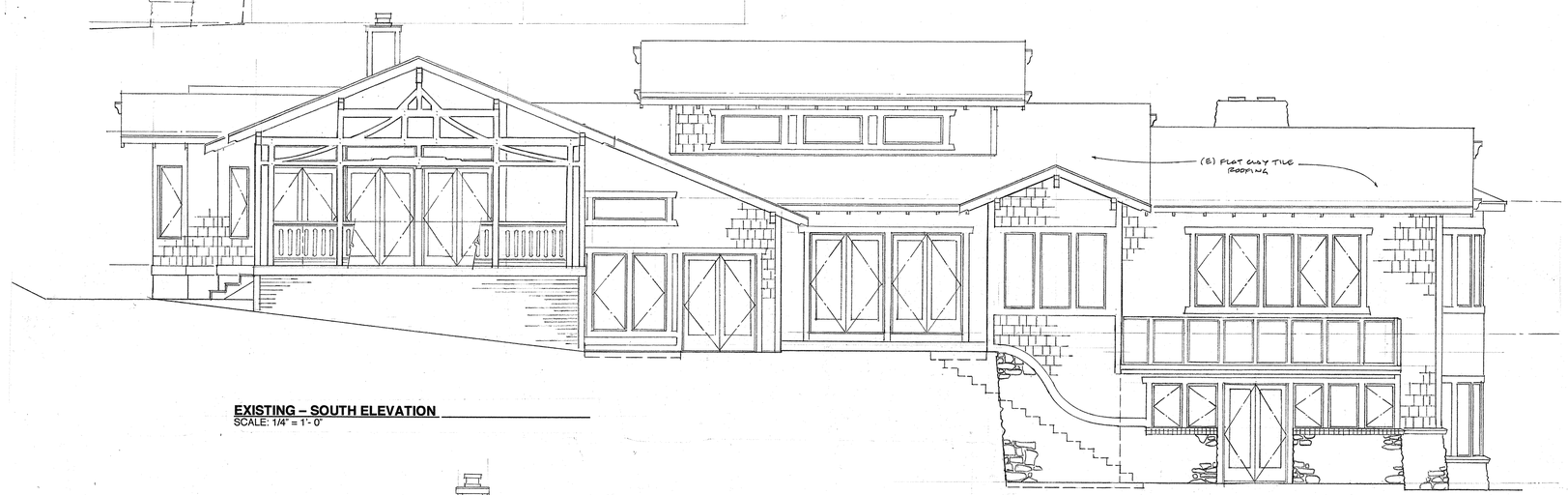

EXISTING – SOUTH ELEVATION
SCALE: 1/4" = 1'- 0"



EXISTING – EAST ELEVATION
SCALE: 1/4" = 1'- 0"

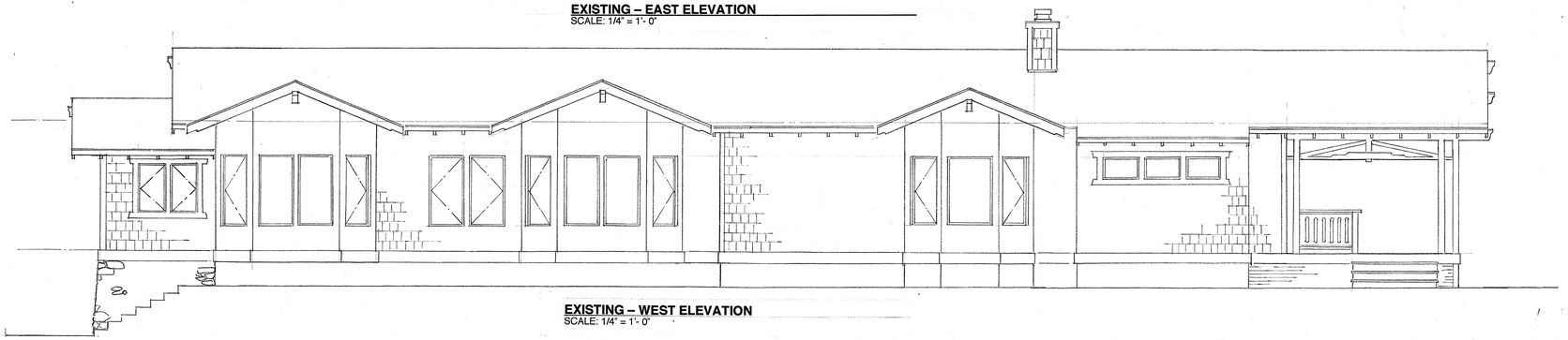

EXISTING – WEST ELEVATION
SCALE: 1/4" = 1'- 0"

EXISTING - MATERIALS SCHEDULE

FOUNDATIONS	8" wide perimeter concrete stem wall with 15" wide footing & 12" diameter redundant piers 8' deep @ ± 7 feet o.c.
CONCRETE SLABS	4" thick concrete slab w/ 6X6 10/10 wire mesh on 2" sand on 10 mil vapor barrier on 4" crushed rock.
FLOORS	2X10FJ's@ 16" o.c., with ¾" T&G plywood subfloor glued and nailed w/ 10d @ 6" o.c. edges & 10" o.c. field, U.N.O. with R-19 batt insulation.
WALLS	Hand sawn redwood shingles on Dbl. layer 15 lb. felt on 3/8" CDX plywood sheathing, nailed w/ 8d @ 6" o.c. edges and 12" o.c. field, U.N.O., on 2 X 4 studs @ 16" o.c. with R-11 high density batt insulation, 1/2" gypsum wallboard interior finish, typical. Battered river rock stone veneer at foundation.
ROOF	Flat clay tile over Dbl. layer 30 lb. felt on 5/8" CDX plywood sheathing nailed w/ 10d @ 6" o.c. edges and 12" o.c. field, U.N.O., to 2 X 8 Rafters @ 16" o.c. with R-19 batt insulation.
GUTTERS & DOWNSPOUTS	16 oz. copper beveled gutters w/ 2" X3" rectangular downspouts deposit into existing landscaped areas.
ROOF / WALL FLASHINGS	16 oz. copper where shown or required. Pan flash @ ext. door sills with 16 oz. copper solder all joints, typical
WINDOWS & EXT. GLASS DRS.	Aluminum sash with single glazed leaded art glass with screens at all operable windows.
INSULATION	FLOORS — R-19 fiberglass batts EXT. WALLS — R-11 high density fiberglass batts INT. WALLS — 3-1/2" fiberglass sound batts ROOFS — R-19 fiberglass batts

Michael Helm, AIA Architect & Associates
200 Seventh Avenue, #110 Santa Cruz, California 95062 (831) 476-5386

REMODEL & ADDITIONS TO THE:
RENFREW RESIDENCE
14500 ARMERICH HILL ROAD – APN 537-12-012
LOS GATOS, CALIFORNIA

EXISTING - EXTERIOR ELEVATIONS

11-14-22
1/4"=1'-0"
MEH
2108

6

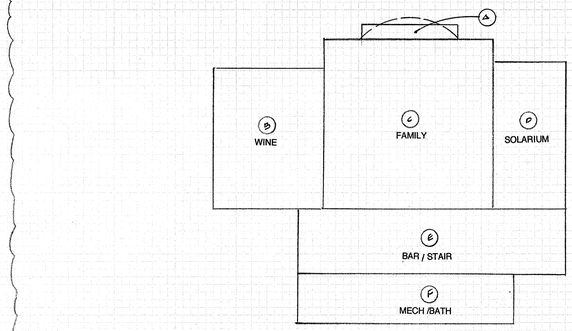

FAR SUMMARY – HOUSE - LOWER FLOOR

1/8" = 1' - 0"

POLYGON / AREA DESIGNATION		DIMENSIONS	AREA (SF)
A	BAY WINDOW	1'-9" X 13'-2"	21.94
B	WINE	14'-2" X 18'-3"	258.54
C	FAMILY	22'-2" X 21'-6"	476.58
D	SOLARIUM	9'-8" X 19'-4"	186.88
E	BAR / STAIR	8'-10" X 34'-9"	306.95
F	MECH / BATH	7' X 28'	196
TOTAL			1397.27 SF

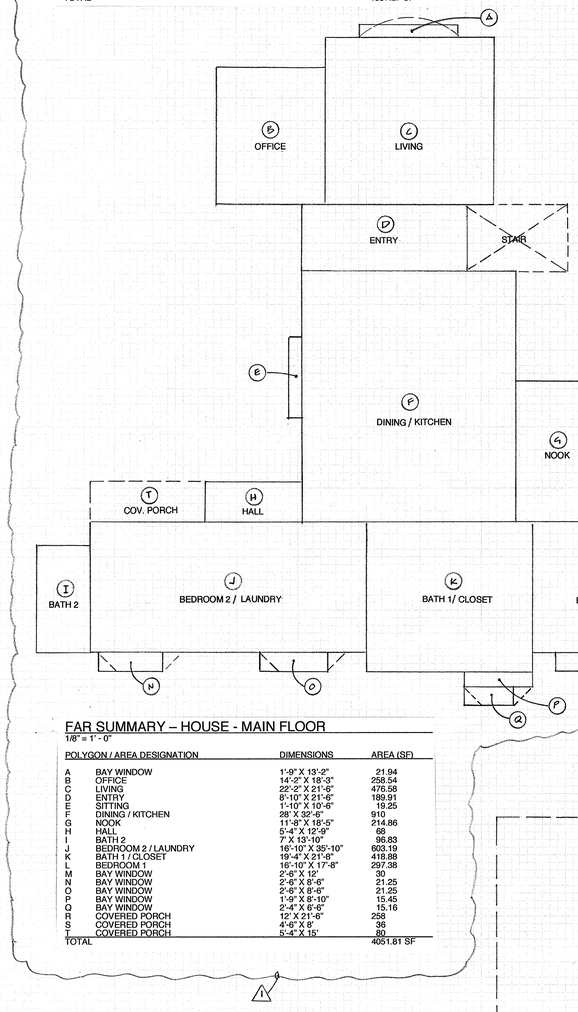

FAR SUMMARY – HOUSE - MAIN FLOOR

1/8" = 1' - 0"

POLYGON / AREA DESIGNATION		DIMENSIONS	AREA (SF)
A	BAY WINDOW	1'-9" X 13'-2"	21.94
B	OFFICE	14'-2" X 18'-3"	258.54
C	LIVING	22'-2" X 21'-6"	476.58
D	ENTRY	8'-10" X 21'-6"	189.91
E	SITTING	1'-10" X 10'-5"	19.25
F	DINING / KITCHEN	28' X 32'-6"	910
G	NOOK	11'-8" X 18'-5"	214.86
H	HALL	5'-4" X 12'-9"	68
I	BATH 2	7' X 13'-10"	96.83
J	BEDROOM 2 / LAUNDRY	16'-10" X 35'-10"	603.19
K	BATH 1 / CLOSET	19'-4" X 21'-8"	418.88
L	BEDROOM 1	16'-10" X 17'-8"	297.38
M	BAY WINDOW	2'-6" X 12'	30
N	BAY WINDOW	2'-6" X 8'-6"	21.25
O	BAY WINDOW	2'-6" X 8'-6"	21.25
P	BAY WINDOW	1'-9" X 8'-10"	15.45
Q	BAY WINDOW	2'-4" X 6'-6"	15.16
R	COVERED PORCH	12' X 21'-6"	258
S	COVERED PORCH	4'-6" X 8'	36
T	COVERED PORCH	5'-4" X 15'	80
TOTAL			4051.81 SF

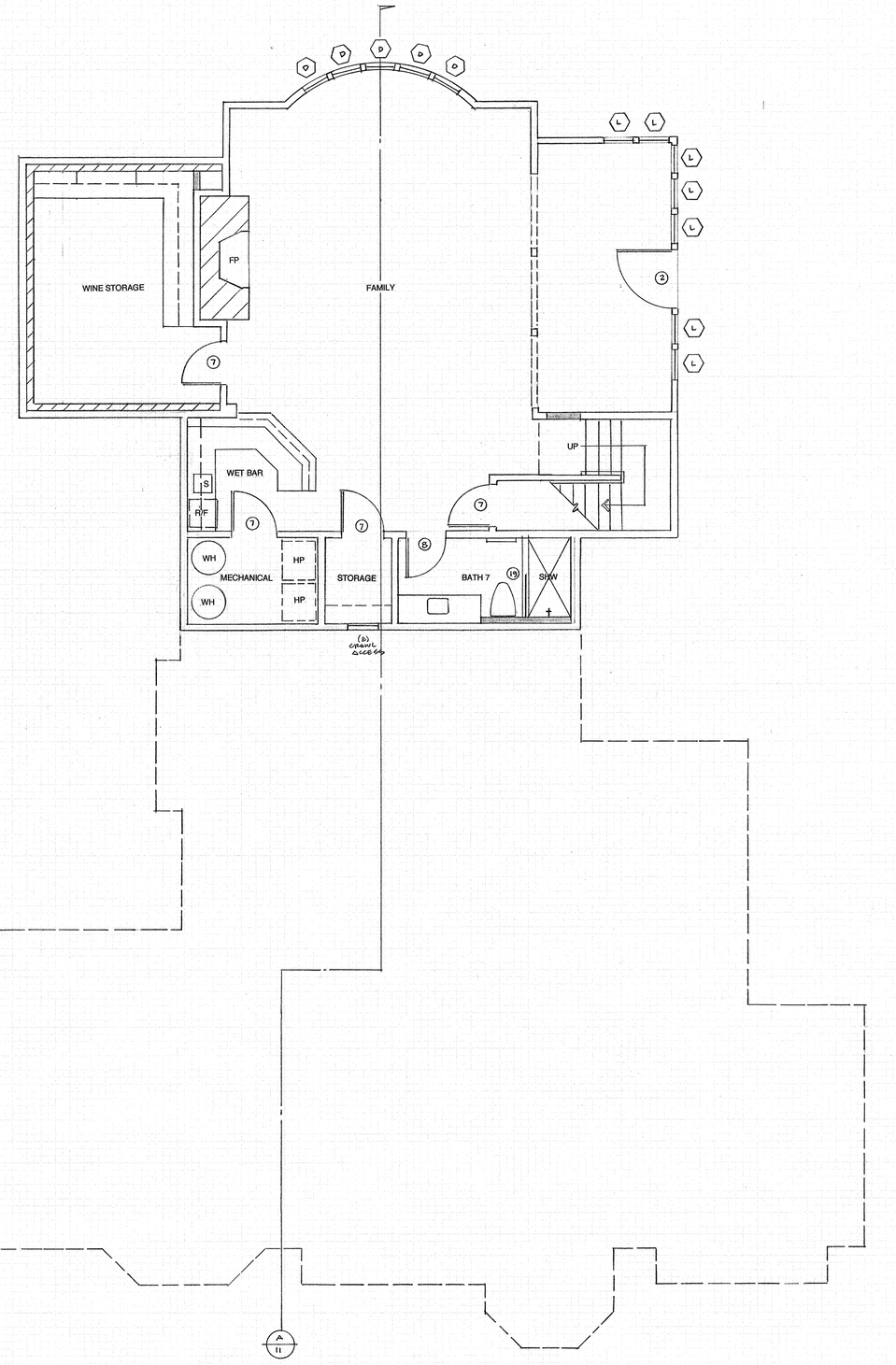

PROPOSED – LOWER FLOOR PLAN

SCALE: 1/4" = 1'- 0"

DOOR SCHEDULE – HOUSE ADDITION

SYM	SIZE	TYPE	QUAN.	REMARKS
1	3076	Exterior, Custom Entry door	1	Stain Grade, Low-E dbl. insulated **Tempered glass**
2	4068	Exterior, Custom door	1	Paint Grade, Low-E dbl. **insulated Tempered glass**
3	2868	Exterior single lite French door	1	Clad/Wood Sash, Low-E dbl. insulated **Tempered glass**
4	Pair 2668	Exterior single lite French doors	3	Clad/Wood Sash, Low-E dbl. **insulated Tempered glass**
5	4W 3080	Exterior single lite XOOX Sliding Patio doors	1	Clad/Wood Sash, Low-E dbl. insulated **Tempered glass**
6	Pair 2868	Exterior single lite XO Sliding Patio door	2	Clad/Wood Sash, Low-E dbl. insulated **Tempered glass**
7	3068	Interior S.C., 3-Panel	9	Stain Grade, by Sun Mountain, Inc.
8	2868	Interior S.C., 3-Panel	12	Stain Grade, by Sun Mountain, Inc.
9	Pair 2668	Interior S.C., 3-Panel	1	Stain Grade, by Sun Mountain, Inc.
10	Pair 2268	Interior S.C., 3-Panel	1	Stain Grade, by Sun Mountain, Inc.
11	Pair 1868	Interior S.C., 3-Panel	1	Stain Grade, by Sun Mountain, Inc.
12	4W 2668	Interior S.C., 3-Panel Sliding Bi-pass Closet doors	1	Stain Grade, by Sun Mountain, Inc. Use heavy duty track & rollers
13	3W 2868	Interior S.C., 3-Panel Sliding Bi-pass Closet doors	2	Stain Grade, by Sun Mountain, Inc. Use heavy duty track & rollers
14	3W 2668	Interior S.C., 3-Panel Sliding Bi-pass Closet doors	1	Stain Grade, by Sun Mountain, Inc. Use heavy duty track & rollers
15	6070	Bi-Pass Sliding Shower Doors	1	3/8" Clear 'Frameless' **Tempered glass**, Provide shop drawings for approval
16	5670	Bi-Pass Sliding Shower Doors	1	3/8" Clear 'Frameless' **Tempered glass**, Provide shop drawings for approval
17	6076	Custom Shower Enclosure	1	3/8" Clear 'Frameless' **Tempered glass**, Provide shop drawings for approval
18	4070	Custom Shower Enclosure	2	3/8" Clear 'Frameless' **Tempered glass**, Provide shop drawings for approval
19	3076	Custom Shower Screen	1	3/8" Clear 'Frameless' **Tempered glass**, Provide shop drawings for approval

WINDOW SCHEDULE – HOUSE ADDITION

SYM	SIZE	TYPE	QUAN.	REMARKS
A	2456	Casement	4	Clad/Wood Sash, Low-E dbl. insulated **Tempered glass**
B	2850	Casement	2	Clad/Wood Sash, Low-E dbl. insulated **Tempered glass**
C	2650	Casement	4	Clad/Wood Sash, Low-E dbl. insulated **Tempered glass**
D	2050	Casement	26	Clad/Wood Sash, Low-E dbl. insulated **Tempered glass**
E	1650	Casement	2	Clad/Wood Sash, Low-E dbl. insulated **Tempered glass**
F	2630	Casement	4	Clad/Wood Sash, Low-E dbl. insulated **Tempered glass**
G	2840	Casement	2	Clad/Wood Sash, Low-E dbl. insulated **Tempered glass**
H	2640	Casement	3	Clad/Wood Sash, Low-E dbl. insulated **Tempered glass**
I	2040	Casement	4	Clad/Wood Sash, Low-E dbl. insulated **Tempered glass**
J	2636	Casement	10	Clad/Wood Sash, Low-E dbl. insulated **Tempered glass**
K	2426/2426 2450/2450	Fixed Transom over Dbl. Casement	1	Clad/Wood Sash, Low-E dbl. insulated **Tempered glass** Mulled together
L	2030	Casement	7	Clad/Wood Sash, Low-E dbl. insulated **Tempered glass**
M	5050	Fixed	1	Clad/Wood Sash, Low-E dbl. insulated **Tempered glass**
N	4650	Fixed	1	Clad/Wood Sash, Low-E dbl. insulated **Tempered glass**
O	3050	Fixed	1	Clad/Wood Sash, Low-E dbl. insulated **Tempered glass**
P	2050	Fixed	5	Clad/Wood Sash, Low-E dbl. insulated **Tempered glass**
Q	1650	Fixed	3	Clad/Wood Sash, Low-E dbl. insulated **Tempered glass**
R	2616	Fixed	3	Clad/Wood Sash, Low-E dbl. insulated **Tempered glass**
S	5018	Fixed	1	Clad/Wood Sash, Low-E dbl. insulated **Tempered glass**
T	4020	Fixed	6	Clad/Wood Sash, Low-E dbl. insulated **Tempered glass**
U	5018	Fixed	1	Clad/Wood Sash, Low-E dbl. insulated **Tempered glass**

Jeld-Wen – Clad Wood sash windows & doors overall standards comply with ANSI/ AAMA/ WDMA/CSA101/I.S.2 / A440-05 / A440-08 / A40-11

a. All units are Gold Label tested & certified with label attached to frame per AAMA standards per CRC, Section 609.3, installation per AAMA 2400
b. All insulated glass units conform to ASTM E2188 / E2190, NFRC certified and labeled.
c. Safety Glazing testing and labelling per CRC, Sections 308.1 & 308.4
d. Energy testing and certification per CEnC, Section 110.6
e. Verify rough openings and window / door sizes prior to ordering.

Note: The NFRC label which states the required U-value and SGHC for all fenestration products shall not be removed prior to inspection or the removal by a building inspector and shall reflect the values listed in the energy report.

REVISIONS	BY
1 11.28.22	MSH

Michael Helm, AIA Architect & Associates
200 Seventh Avenue, #110 Santa Cruz, California 95062 (831) 476-5386

REMODEL & ADDITIONS TO THE:
RENFREW RESIDENCE
14500 ARNERICH HILL ROAD – APN 537-12-012
LOS GATOS, CALIFORNIA

PROPOSED LOWER FLOOR PLAN

DATE 11.14.22
SCALE 1/4" = 1'-0"
DRAWN MSH
JOB 2108
SHEET 7
OF SHEETS

DAYPRINT CORP. 700 SO. CLAREMONT ST. SAN MATEO, CA. 94402
STOCKDRAFTING FORM NO. 101-57

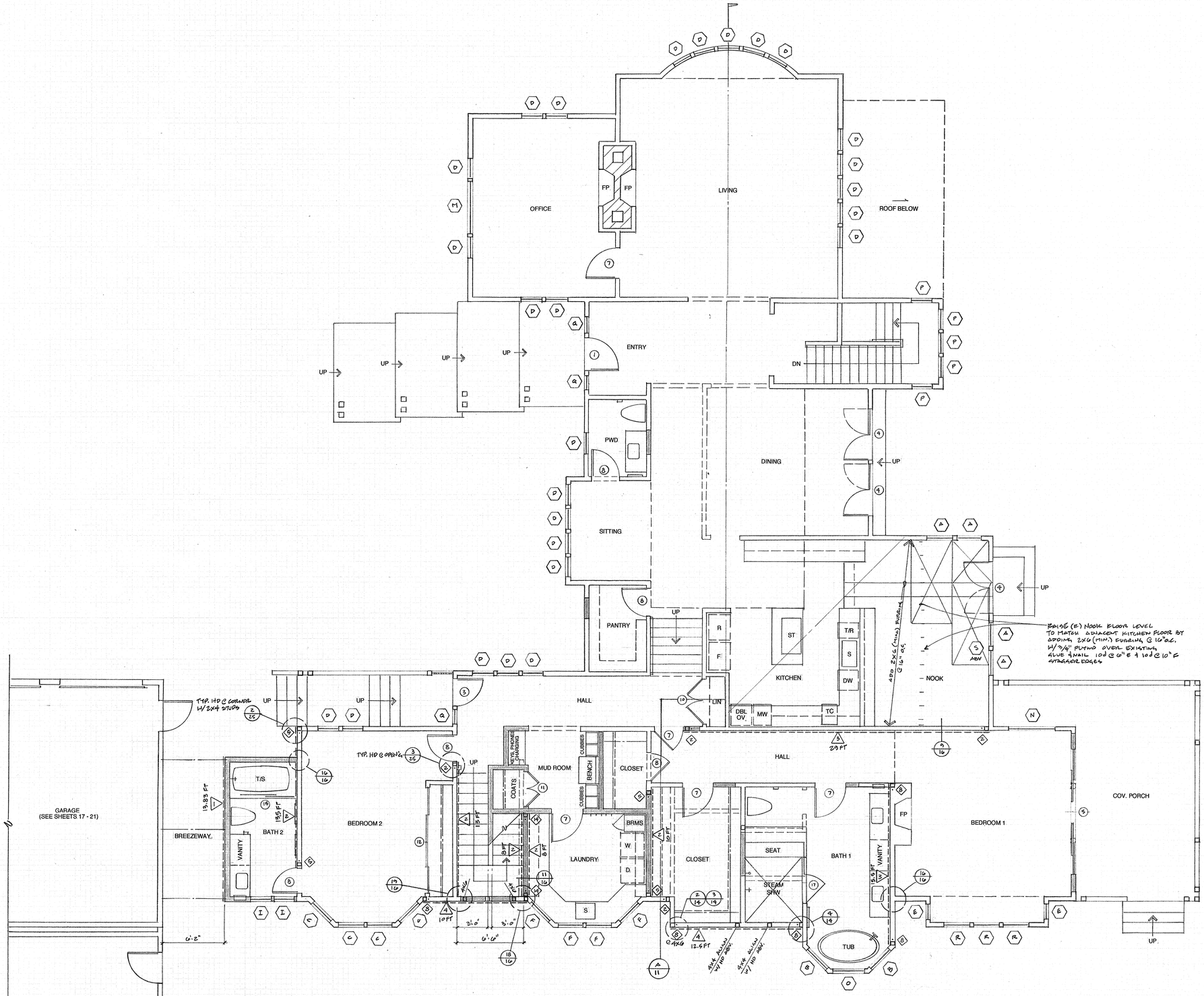

PROPOSED – MAIN FLOOR PLAN

SCALE: 1/4" = 1'-0"

REVISIONS	BY

Michael Helm, AIA Architect & Associates
200 Seventh Avenue, #110 Santa Cruz, California 95062 (831) 476-5386

REMODEL & ADDITIONS TO THE:
RENFREW RESIDENCE
14500 ARNERICH HILL ROAD – APN 537-12-012
LOS GATOS, CALIFORNIA

PROPOSED - MAIN FLOOR PLAN

DATE	11-14-22
SCALE	1/4"=1'-0"
DRAWN	MH
JOB	2108
SHEET	8
OF	SHEETS

DATAPRINT CORP 700 BO CLAREMONT ST SAN MATEO, CA 9440
STOCKDRAFTING FORM NO 101-57

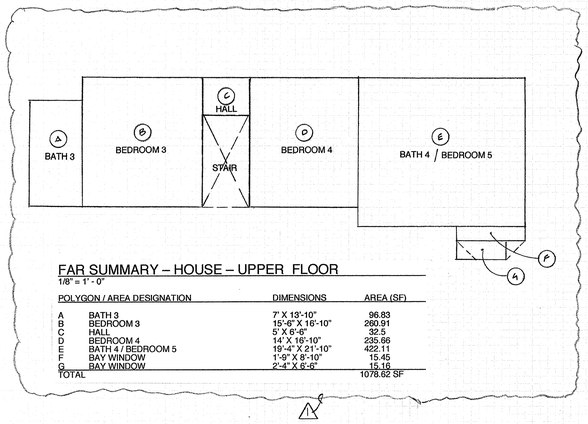

FAR SUMMARY – HOUSE – UPPER FLOOR

1/8" = 1' - 0"

POLYGON / AREA DESIGNATION		DIMENSIONS	AREA (SF)
A	BATH 3	7' X 13'-10"	96.83
B	BEDROOM 3	15'-6" X 16'-10"	260.91
C	HALL	5' X 6'-6"	32.5
D	BEDROOM 4	14' X 16'-10"	235.66
E	BATH 4 / BEDROOM 5	19'-4" X 21'-10"	422.11
F	BAY WINDOW	1'-9" X 8'-10"	15.45
G	BAY WINDOW	2'-4" X 6'-6"	15.16
TOTAL			1078.62 SF

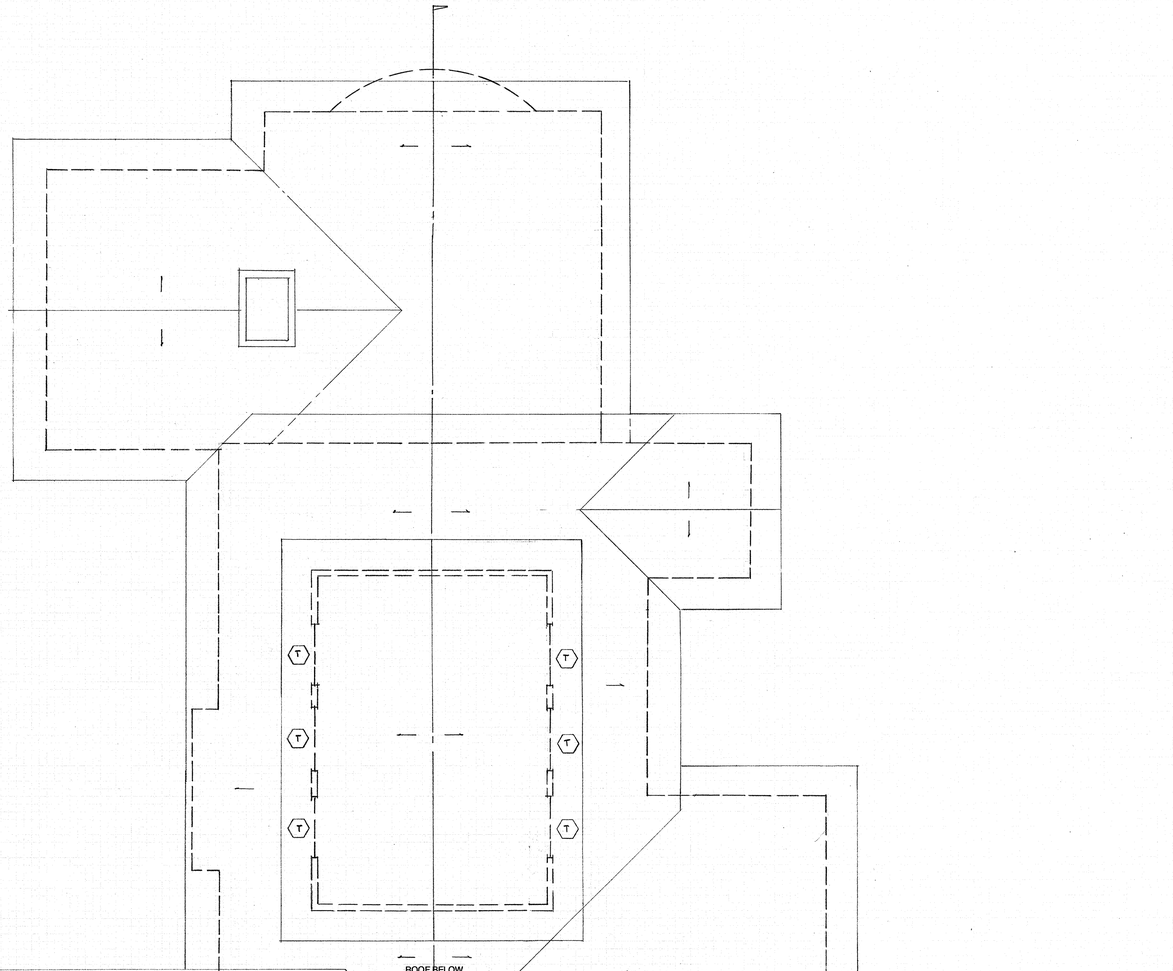

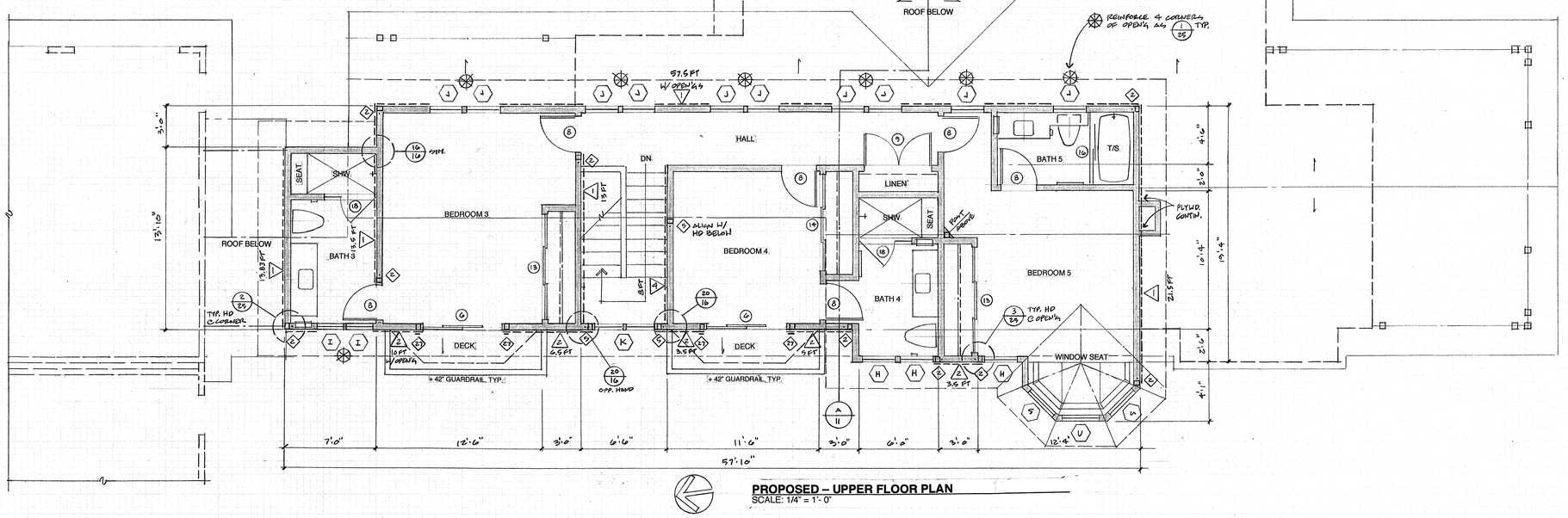

PROPOSED – UPPER FLOOR PLAN

SCALE: 1/4" = 1'-0"

Michael Helm, AIA Architect & Associates
200 Seventh Avenue, #110 Santa Cruz, California 95062 (831) 476-5386

REMODEL & ADDITIONS TO THE:

RENFREW RESIDENCE

14500 ARNERICH HILL ROAD – APN 537-12-012

LOS GATOS, CALIFORNIA

REVISIONS	BY
1 11.28.22	MSH

PROPOSED - UPPER FLOOR PLAN

DATE 11.14.22
SCALE 1/4"=1'-0"
DRAWN MSH
JOB 2108
SHEET 9
OF SHEETS

BLUEPRINT CORP 700 SO. CLAREMONT ST SAN MATEO, CA 9440
STOCKDRAFTING FORM NO 101-57



PROPOSED – NORTH ELEVATION
SCALE: 1/4" = 1'- 0

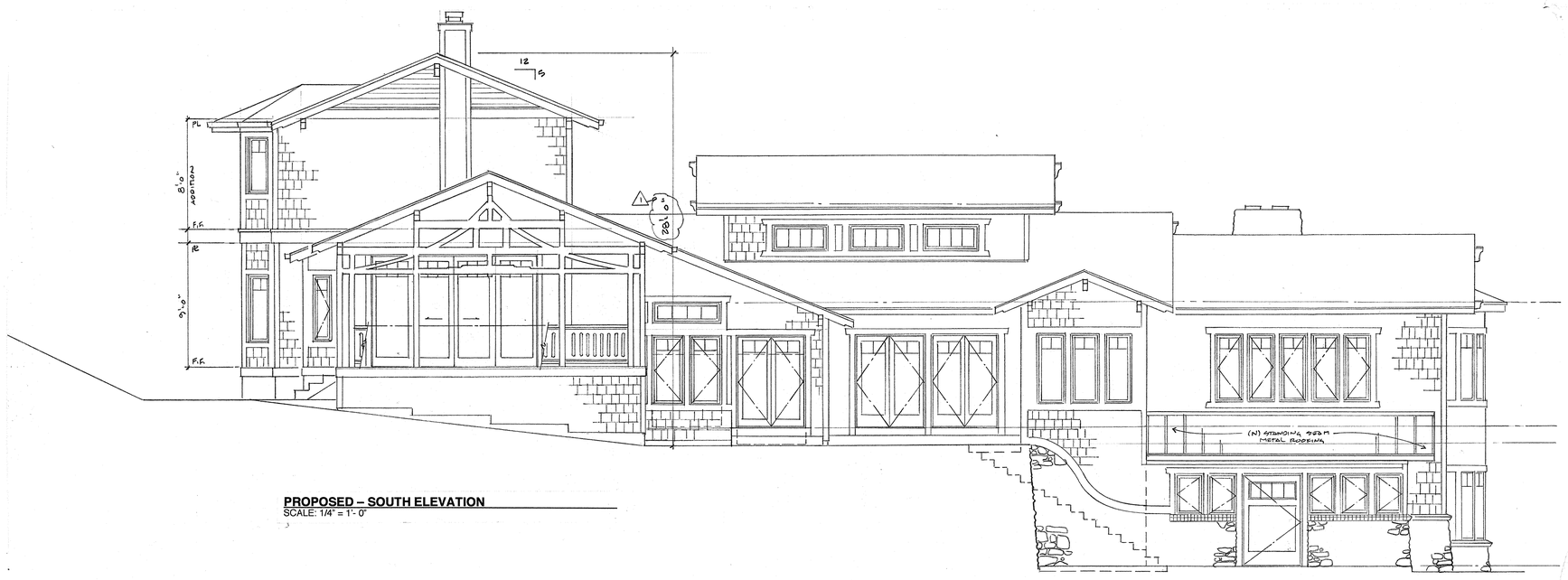

PROPOSED – SOUTH ELEVATION
SCALE: 1/4" = 1'- 0"



PROPOSED – WEST ELEVATION
SCALE: 1/4" = 1'- 0"

STANDING SEAM METAL ROOFING

Peterson Aluminum Corp., PAC-CLAD 18" wide snap-clad 24 gauge Standing Seam Metal Roofing, UL-580 Class 90 wind uplift, UL-Class A fire rated, installation per mfg. Specs over Dbl layer 30 lb. Felt over 5/8" CDX plywood sheathing nailed w/ 10d @ 6" o.c. edges and 12" o.c. field, U.N.O., to to 2X Rafters @ 24" o.c. or 2X Pre-fabricated trusses @ 24" o.c. with R-30 closed cell polyurethane spray foam insulation. Underlayment shall comply with ASTM D226 Type I; ASTM Type I, II, III or IV; ASTM D6757, and shall bear a label indicating compliance to the standard designation. **Eave construction shall meet SFM 12-7A-3 requirements.**

CONSTRUCTION SCHEDULE - HOUSE ADDITION

FOUNDATIONS	24" wide X 24" deep concrete grade beam with 2 - #5 bars T & B w/ #3 ties @ 12" o.c. CONCRETE SLABS: 5" thick concrete slab w/ #4 bars @ 16" o.c. each way, on 15 mil vapor barrier on 6" crushed rock. CONCRETE MIX: Substitute Portland Cement with recycled flyash, 35% by volume, typical. Keep receipts for Inspector verification. TREATED LUMBER: Substitute ACQ pressure treatment for CCA products, typical. FORM BOARDS: Clean and re-use for scaffolding, forms, blocking, etc... FORM RELEASE AGENT: Use Non-toxic soy based 0-VOC form release agent by BIO-GUARD CO. or Architect approved equal.
FLOORS	TJI's @ 16" o.c., with ¾" T&G plywood subfloor glued and nailed w/ 10d @ 6" o.c. edges & 10" o.c. field, U.N.O. with R-19 batt insulation.
WALLS	5/16" James Hardie fiber cement horizontal siding or shingles over 'TYVEK' house wrap on 5/8" Type 'X' exterior gypsum sheathing on 7/16" CDX plywood or OSB sheathing, nailed w/10d @ 6" o.c. edges and 12" o.c. field, U.N.O., on 2 X 6 studs @ 16" o.c. with R-23 high density batt insulation, 1/2" gypsum wallboard interior finish, typical. Use low/No VOC exterior/interior paints. **Wall construction shall meet SFM12-7A-1 requirements.**
ROOF	Class B (min.) flat clay tile (to match existing), install per mfg. specs over Dbl. layer 30 lb. felt over 5/8" CDX plywood sheathing nailed w/ 10d @ 6" o.c. edges and 12" o.c. field, U.N.O., to 2X Rafters @ 24" o.c. with R-30 closed cell polyurethane spray foam insulation. Underlayment shall comply with ASTM D226 Type I; ASTM Type I, II, III or IV; ASTM D6757, and shall bear a label indicating compliance to the standard designation. **Eave construction shall meet SFM 12-7A-3 requirements.**
GUTTERS & DOWNSPOUTS	16 oz. copper beveled gutters w/ 2" diameter round downspouts deposit into existing landscaped areas. **Gutters shall be provided with leaf/debris protection.**
ROOF / WALL FLASHINGS	16 oz. copper where shown or required. Pan flash all ext. door sills with 16 oz. copper solder all joints, typical
WINDOWS & EXT. GLASS DRS.	Jeld-Wen – Alum. Clad/Wood sash with Dbl. insulated **Tempered** Low-E glass, provide screens at all operable windows. **Exterior door assemblies shall conform to SFM 12-7A-1 requirements.**
INSULATION	FLOORS R-19 fiberglass batts EXT. WALLS R-23 high density fiberglass batts INT. WALLS 3-1/2" fiberglass sound batts ROOFS R-30 closed cell polyurethane spray foam
ROOF JACKS	Provide neoprene gaskets and 16 oz. copper roof jack / rain cap, typical. All exhaust vents shall be located a min. of 4' from or 1' above all roof or wall openings per CMC. All plumbing vents shall be located a min. of 10' from or 3' above all roof or wall openings per CPC.
WALL PENETRATIONS	Use weatherproofing wall jacks by QUICKFLASH or approved equal for plumbing, electrical and mechanical penetrations.
PAINTS, STAINS, ADHESIVES & SEALERS	Use Low / No VOC, water based products and solvent-free adhesives, typical.
PLUMBING	Install Low-flow toilets. Install Low-flow shower heads with chlorine filters.
CABINETS & TRIM	Use formaldehyde-free particle board and MDF by MEDITE or approved equal for all cabinets and trim applications

14500 ARNERICH RD, LOS GATOS
Project Address
537-12-012
APN

AR 22-2476
Project File Number

Color/Materials Board*

Roof PETERSEN ALUM. CORP, 18"WIDE, 24GA, PAC-CLAD STANDING SEAM METAL ROOFING
Manufacture & Material
Product Name, Number
DARK BRONZE
REFLECTIVITY 0.29

Door & Window Frames, Railings
JELD-WEN CLAD-WOOD
Manufacture / Number
Color Name, LRV CHESTNUT BRONZE LRV 6%

Trim JAMES HARDIE - FIBER CEMENT - PAINTED
Manufacture / Number SHERWIN WILLIAMS
Color Name, LRV OLIVE SW1166, LRV 30%

Exterior Walls JAMES HARDIE - FIBER CEMENT HORIZONTAL LAP OR SHINGLE SIDING - PAINTED
Manufacture / Number SHERWIN WILLIAMS
Color Name, LRV CARDAMOM SW2727, LRV 7%

Architectural Accents (Ex. Stone Veneer)
TAHOE RIVER ROCK (EXISTING TO REMAIN)
Manufacture / Number N/A
Color Name, LRV N/A

Retaining Walls (E) RIVER ROCK (SEE ABOVE)
(P) STUCCO FINISH - PAINTED
Manufacture / Number SHERWIN WILLIAMS
Color Name, LRV OLIVE SW1166, LRV 30%

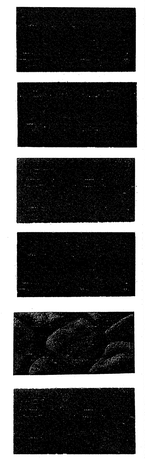

1	AR 11-28-22 MSH

Michael Helm, AIA Architect & Associates
200 Seventh Avenue, #110 Santa Cruz, California 95062 (831) 476-5386

REMODEL & ADDITIONS TO THE:
RENFREW RESIDENCE
14500 ARNERICH HILL ROAD APN:537-12-012
LOS GATOS, CALIFORNIA

PROPOSED - EXTERIOR ELEVATIONS

11.14.22
1/4"=1'-0"
MSH
2108

10



PROPOSED – EAST ELEVATION
SCALE: 1/4" = 1'- 0"

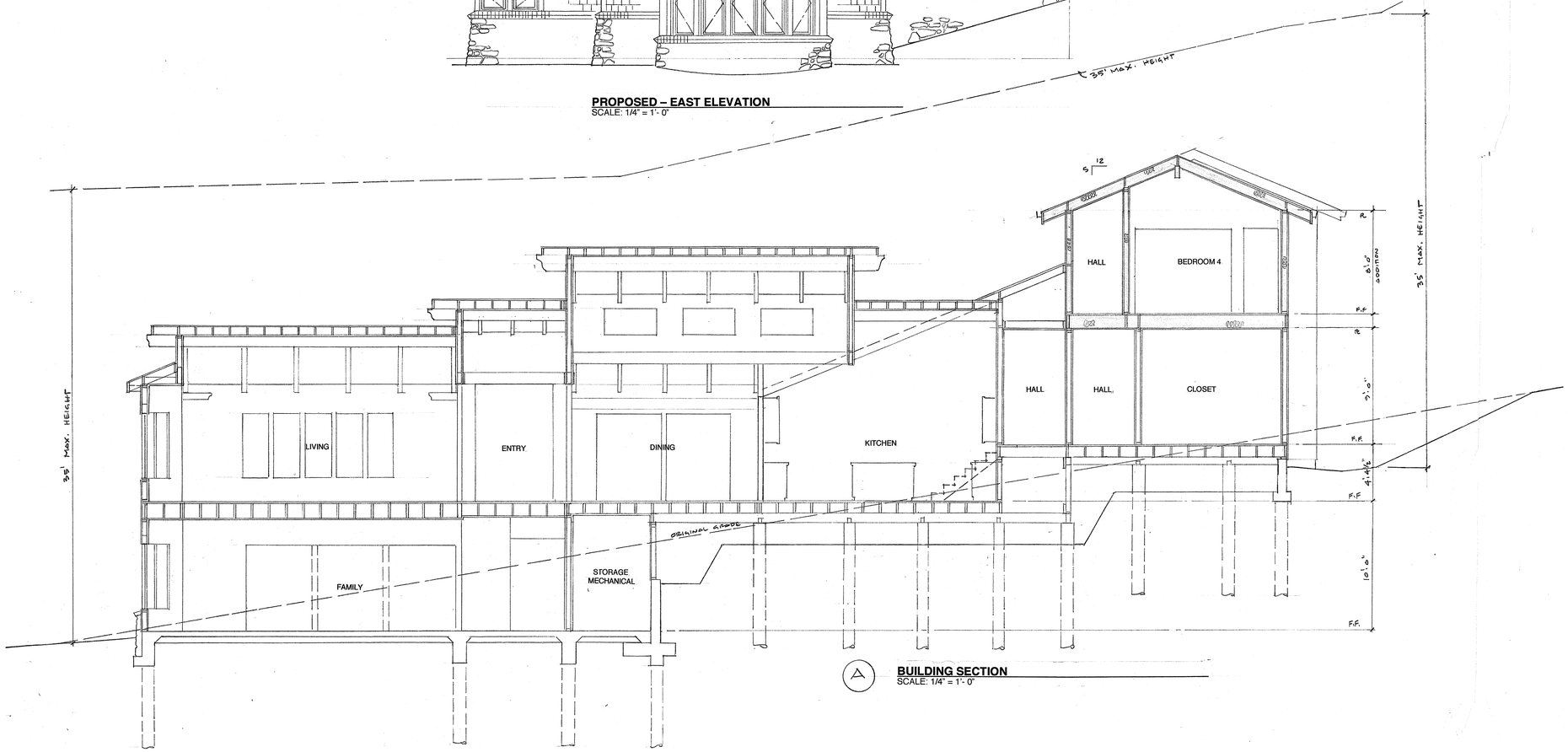

A **BUILDING SECTION**
SCALE: 1/4" = 1'- 0"

CONSTRUCTION SCHEDULE - HOUSE ADDITION

FOUNDATIONS	24" wide X 24" deep concrete grade beam with 2 - #5 bars T & B w/ #3 ties @ 12" o.c. CONCRETE SLABS: 5" thick concrete slab w/ #4 bars @ 16" o.c. each way, on 15 mil vapor barrier on 6" crushed rock. CONCRETE MIX: Substitute Portland Cement with recycled flyash, 35% by volume, typical. Keep receipts for Inspector verification. TREATED LUMBER: Substitute ACQ pressure treatment for CCA products, typical. FORM BOARDS: Clean and re-use for scaffolding, forms, blocking, etc... FORM RELEASE AGENT: Use Non-toxic soy based 0-VOC form release agent by BIO-GUARD CO. or Architect approved equal.
FLOORS	TJI's @ 16" o.c., with ¾" T&G plywood subfloor glued and nailed w/ 10d @ 6" o.c. edges & 10" o.c. field, U.N.O. with R-19 batt insulation.
WALLS	5/16" James Hardie fiber cement horizontal siding or shingles over "TYVEK" house wrap on 5/8" Type 'X' exterior gypsum sheathing on 7/16" CDX plywood or OSB sheathing, nailed w/10d @ 6" o.c. edges and 12" o.c. field, U.N.O., on 2 X 6 studs @ 16" o.c. with R-23 high density batt insulation, 1/2" gypsum wallboard interior finish, typical. Use low/No VOC exterior/interior paints. **Wall construction shall meet SFM12-7A-1 requirements.**
ROOF	Class B (min.) flat clay tile (to match existing), install per mfg. specs over Dbl. layer 30 lb. felt over 5/8" CDX plywood sheathing nailed w/ 10d @ 6" o.c. edges and 12" o.c. field, U.N.O., to 2X Rafters @ 24" o.c. with R-30 closed cell polyurethane spray foam insulation. Underlayment shall comply with ASTM D226 Type I; ASTM Type I, II, III or IV; ASTM D6757, and shall bear a label indicating compliance to the standard designation. **Eave construction shall meet SFM 12-7A-3 requirements.**
GUTTERS & DOWNSPOUTS	16 oz. copper beveled gutters w/ 2" diameter round downspouts deposit into existing landscaped areas. **Gutters shall be provided with leaf/debris protection.**
ROOF / WALL FLASHINGS	16 oz. copper where shown or required. Pan flash all ext. door sills with 16 oz. copper solder all joints, typical
WINDOWS & EXT. GLASS DRS.	Jeld-Wen – Alum. Clad/Wood sash with Dbl. insulated **Tempered** Low-E glass, provide screens at all operable windows. **Exterior door assemblies shall conform to SFM 12-7A-1 requirements.**
INSULATION	FLOORS R-19 fiberglass batts EXT. WALLS R-23 high density fiberglass batts INT. WALLS 3-1/2" fiberglass sound batts ROOFS R-30 closed cell polyurethane spray foam
ROOF JACKS	Provide neoprene gaskets and 16 oz. copper roof jack / rain cap, typical. All exhaust vents shall be located a min. of 4' from or 1' above all roof or wall openings per CMC. All plumbing vents shall be located a min. of 10' from or 3' above all roof or wall openings per CPC.
WALL PENETRATIONS	Use weatherproofing wall jacks by QUICKFLASH or approved equal for plumbing, electrical and mechanical penetrations.
PAINTS, STAINS, ADHESIVES & SEALERS	Use Low / No VOC, water based products and solvent-free adhesives, typical.
PLUMBING	Install Low-flow toilets. Install Low-flow shower heads with chlorine filters.
CABINETS & TRIM	Use formaldehyde-free particle board and MDF by MEDITE or approved equal for all cabinets and trim applications

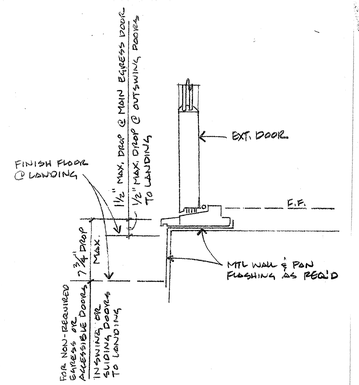

NOTE: EVERY LANDING SHALL HAVE A DIMENSION OF 36 INCHES MINIMUM IN THE DIRECTION OF TRAVEL. THE FINISHED SURFACE OF THE EXTERIOR LANDING AT THE MAIN EGRESS DOOR SHALL NOT BE GREATER THAN 1-1/2 INCHES BELOW THE TOP OF THE THRESHOLD. EXTERIOR LANDINGS AT DOORS THAT ARE NOT THE MAIN EGRESS SHALL NOT BE MORE THAN 7-3/4 INCHES BELOW THE TOP OF THE THRESHOLD. 1/2 INCH MAXIMUM DROP AT OUTSWING DOORS.

1 EXTERIOR THRESHOLD

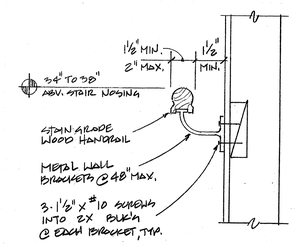

2 INTERIOR HANDRAIL

Michael Helm, AIA Architect & Associates
200 Seventh Avenue, #110 Santa Cruz, California 95062 (831) 476-5386

REMODEL & ADDITIONS TO THE:
RENFREW RESIDENCE
14500 ARNERICH HILL ROAD – APN 537-12-012
LOS GATOS, CALIFORNIA

PROPOSED - EXTERIOR ELEVATIONS BUILDING SECTION

11.14.22
1/4"=1'-0"
MSH
2108

11

ELECTRICAL NOTES

General

1 All Electrical work to comply with the latest adopted edition of the California Electrical Code.

2 Electrical contractor to submit load calculations and panel diagrams to the Building Department prior to beginning work.

3 Do not install electrical panels larger than 16 square inches in rated fire walls. Maintain a clearance of 36" in front of the panels.

4 Bond all metal gas and water pipes to ground. All ground clamps must be accessible and of an approved type. (CEC 250.104)

5 All joints and penetrations to be caulked and sealed.

Circuits

1 Central heating equipment shall be supplied by an individual branch circuit. Verify electrical requirements for all mechanical equipment.

2 All exterior, garage, kitchen and bathroom circuits shall be on GFCI circuits. Combination AFCI/GFCI outlets are required at kitchen and laundry areas.

3 All branch circuits that supply 125-volt, single-phase, 15- and 20-ampere outlets (i.e. receptacles, lights, smoke alarms, etc.) to be protected by Arc-Fault Circuit Interrupter (AFCI) listed to provide protection of the entire branch circuit per CEC 210-12(B) in kitchens, laundry rooms, family rooms, dining rooms, living rooms, bedrooms, closets, hallways, and similar living spaces. CEC 210.12

4 One 20A circuit shall be provided to supply the bathroom receptacle outlets. Such circuit shall have no other outlets CEC 210.11(C).

5 Provide two small appliance branch circuits for Kitchen refrigerator and counter outlets only, not to include outside plugs, range hood, disposal, dishwasher or microwave.

6 Provide a dedicated 20 amp circuit to serve the required bathroom outlets. This circuit cannot serve any other receptacles, lights, fans, etc.... Exception: where the circuit supplies a single bathroom, outlets for other equipment within the bathroom shall be permitted.

7 Provide a dedicated 20 amp circuit to supply laundry receptacle outlets. Dryer and cooking units shall have a four-prong outlet with four conductor wires with an insulated neutral.

8 Provide a listed raceway to accommodate a dedicated 208/240-volt branch circuit for electric vehicle charging not less than 1" nominal inside diameter. The raceway shall originate at the main service or sub panel and shall terminate in a listed cabinet, box or enclosure in close proximity to the proposed location of the EV charger. Raceways are required to be continuous at enclosed, inaccessible or concealed areas and spaces. The raceway termination location shall be permanently and visibly marked as "EV CAPABLE". The service panel and/or subpanel shall provide capacity to install a 40-amp, minimum dedicated branch circuit and space(s) reserved to permit installation of a branch circuit overcurrent protective device. The service panel or subpanel shall identify the overcurrent protective device space(s) reserved for future EV charging as "EV CAPABLE". The EV Charging circuit must be rated for continuous duty at 125% of load. All Electrical Vehicle Supply Equipment (EVSE) shall be installed in accordance with the California Electrical Code.

Switches

1 Wall switches to be 42" @ centerline above finish floor. All outlets to be 12" @ centerline above finish floor, unless noted otherwise.

2 Dimmers or vacancy sensors shall control all luminaires required to have light source compliant with Reference Joint Appendix JA8 per Table 150.0-A. Exceptions are provided for closets smaller than 70 sq. ft. floor area and light fixtures in hallways per CA Energy 150.0(k)3. At least one luminaire in bathrooms, garages, laundry rooms, and utility rooms shall be controlled by a vacancy sensor. (CEnC 150.0(k)2J)

3 Exterior lighting attached to any building shall be high efficacy, controlled by a manual ON and OFF switch that does not override to ON, and controlled by a motion sensor with photo-control, or other methods allowed by CEnC 150.0(k)3

Receptacles

1 Receptacles on 125-volt 15 & 20 amp circuits shall be listed tamper resistant. (CEC 406.12) Except when located more than 5.5' above the floor; within cabinets or cupboards; or when part of a luminaire or appliance.

2 Receptacles must be installed at 12' o.c. maximum in walls. Walls longer than 2 feet and halls longer than 10' must have a receptacle. A receptacle must be provided within 3' of bathroom sinks. (CEC 210.52). Spacing of kitchen and dining room countertop receptacles shall meet minimum requirements of CEC 210.52(C), Parts 1-5.

3 Ground-Fault Circuit-Interrupter (GFCI) protected receptacles shall be installed in bathrooms, garages, outdoors, crawl spaces, kitchen, unfinished basements, and receptacles within 6 ft. of the outside edge of laundry, utility, and wet sinks. All dwellings must have at least one exterior outlet at the front and the back of the dwelling. (CEC 210.52(E)

4 GFCI outlets are required for all kitchen receptacles that are designed to serve countertop surfaces, in bathroom, in under-floor spaces or below grade level, in exterior outlets, and in all garage outlets not dedicated to a single device or appliance. (CEC 210.8)

5 Arc-Fault Circuit-Interrupter (AFCI) protected receptacles shall be installed in all rooms not requiring GFCI protection. The maximum length of the branch circuit to the AFCI is 50 feet for 14 AWG conductors or 70 feet for a 12 AWG conductor. Arc-fault circuit interruptor protection must be provided in accordance with CEC 210.12(A), (B) and (C). AFCI devices shall be installed in readily accessible locations. All branch circuits that supply 125 volt, single phase, 15 ampere and 20 ampere outlets (i.e. receptacles, lights, smoke alarms, etc.) to be protected by Arc-fault Circuit Interrupter (AFCI) listed to provide protection of the entire branch circuit per CEC 210-12(B) in kitchens, family rooms, dining rooms, living rooms, parlors, libraries, dens, bedrooms, sunrooms, recreation rooms, closets, hallways, laundry areas, or similar living spaces. Cabinetry or being dedicated to appliances does not exempt requirement.

6 Exterior Outlets @ Grade: At least one readily accessible outlet from grade and not more than 6-1/2 feet above grade level shall be installed at the front and back of dwelling, be GFCI protected, and have a weatherproof enclosure.

7 Exterior Outlets @ Balconies, Decks, and Porches: Each balcony, deck, and porch shall have at least one readily accessible outlet not more than 6-1/2 feet above the walking surface, be GFCI protected, and have a weatherproof enclosure.

Light Fixtures

1 All new light fixtures must be high efficacy. Bathroom lighting and closet lighting are not exempt. Lighting in bathrooms, garages, laundry rooms & utility rooms must be controlled by a vacancy sensor or dimmer switch per CA Energy Standard 150.0(k)1A.

2 Dimmers or vacancy sensors shall control all luminaires. Exceptions are provided for closets smaller than 70 sq. ft. floor area and light fixtures in hallways per CA Energy 150.0(k)3. At least one of the high efficacy light fixtures in bathrooms shall be controlled by a vacancy sensor and the other(s) shall be high efficacy. Exterior lighting shall be high efficacy or controlled by a photo/motion sensor per CEnC 150.0(k)9A

4 All LED lighting shall be California Energy Commission certified to quality as high efficacy.

5 All recessed light fixtures shall be IC listed per CEnC 150.0(k)6

6 Fixtures installed in wet or damp locations shall be installed so that water cannot enter or accumulate in wiring compartments, lamp holders, or other electrical parts. Fixtures in wet or damp locations will be marked for such use. Lighting fixtures located within 3 feet horizontally and 8 feet vertically of the bathtub rim or shower stall threshold shall be listed for a damp location, or listed for wet locations where subject to shower spray per CEC 410.10

JA8 marking is required for the following:

7 All lighting must be high efficacy. High efficacy luminaires may require JA8-2016 or JA8-20160-E labeling. Per CEnE 150.0(K)1A, 150.0(K)1G, 150.0(K)2K Table 150.0-A

8 Fixtures recessed into ceilings shall be listed for zero clearance insulation contact (IC) have a label that certifies that the fixture is airtight with air leakage less than 2.0CFMN at 75 Pascal's (A1), be sealed with a gasket or caulk to the ceiling, have an accessible ballasts/drivers if hardwired, and not contain a screw base socket. They shall contain light sources that comply with Reference Joint Appendix JA8, including the elevated temperature requirements, and that are marked "JA8-2106-E" Per CenC 150.0(K)1)(C).

9 Recessed Down-light Luminaires in Ceilings: Recessed downlight luminaires in ceilings must be installed per CEnC150.0(k)1C, be listed IC rated, labeled for air leakage less than 2.0 CFM, be sealed with a gasket or caulk to the ceiling, have accessible ballasts/drivers if hardwired, not contain a screw base sockets, comply with JA8, and marked JA8-2016-E as specified in Reference Appendix JA8.

10 Screw Based Luminaires: Screw based luminaires shall be high efficacy and controlled by dimmers or vacancy sensors. Installed lamps shall be marked with 'JA8-2026' or JA8-2016-E' as specified in Reference Joint appendix JA8. Light sources not marked 'JA8-2016-E' shall not be installed in enclosed luminaires.

11 A GU-24 lamp fitting is a 2-pin connector for compact fluorescent lamps (CFL) or LED lamps that use bayonet mount-like twist-lock 2-pin connector instead of an Edison screw fitting.

12 Any light source not otherwise listed above and certified to the Commission as complying with Joint Appendix 8.

Alarms

1 Contractor must install or verify the existence of smoke alarms and carbon monoxide alarms outside each bedroom as well as one on every level. An additional smoke alarm is required inside each bedroom. Alarms in existing areas where access to the area above the ceiling is not possible may be powered by a D/C battery source. In the areas of new construction or existing rooms where the area above the ceiling is accessible, alarms must be powered by an A/C power source with a battery back-up and be interconnected.(CRC 314, 315).

2 Smoke detector/ alarms are to be provided with battery back-up and audible in all sleeping areas and shall be hard-wired and inter-connected per CRC R314.5. Smoke alarms shall be located more than 36 inches clear from heating supply registers per NFPA 72, Section 29.8.3.4 (6), and bathroom doors per NFPA 72, Section 29.8.3.4 (5), CRC R314.3.3.

3 An approved carbon monoxide alarm shall be installed in dwellings within which fuel-burning appliances are installed, and in dwellings with an attached garage. Carbon monoxide detector/ alarms on all habitable levels and shall be hard-wired and inter-connected per CRC R315.1.

4 Where more than one smoke alarm is required to be installed within an individual dwelling unit in accordance with CRC R314.3, the alarm devices shall be inter-connected in such a manner that the actuation of one alarm will activate all of the alarms in the individual dwelling unit. Physical inter-connection of smoke alarms shall not be required where listed wireless alarms are installed and all alarms sound upon activation of one alarm. The alarms shall be clearly audible in all bedrooms over background noise levels with all intervening doors closed.

HVAC

1 Provide exhaust fans in kitchen and each bathroom vented to outside and sized as follows. Kitchen: >/= 100 CFM intermittent, >/= 5 AC/h continuous with a tested static pressure of .25 wc, rated @ =/<3 sones. Fans to be attached to a minimum 5" diameter smooth duct, <70 lin. ft., subtract 15' of allowed length for each elbow.
Bathrooms: >/= 50 CFM intermittent, >/= 20 CFM continuous with a tested static pressure of .25 wc, rated @ =/<3 sones. Fans to be attached to a minimum 4" diameter smooth duct, <70 lin. ft., subtract 15' of allowed length for each elbow.
Exhaust fan ratings to be </= 1 sone continuous, </= 3 sones intermittent.
Bath fans to be Energy Star compliant and equipped with humidistat controls for adjustment of relative humidity from 50 to 80%, per CalGreen code 4.506.1.

2 Bathroom exhaust fans shall be switched separately from lighting system per CA Energy Code 150.0(k)2B.

3 Provide a whole-building mechanical exhaust system to outdoor air at the minimum rate of 70 CFM with a tested static pressure of .25 wc, rated @ =/<3 sones. Fans to be attached to a minimum 5" diameter smooth duct, <70 lin. ft., subtract 15' of allowed length for each elbow. System to have an accessible off/on switch that is properly labeled. Covers and louvers for the whole house ventilation fan(s) shall be provided so that they close when the system is turned off. Covers or louvers shall have min. R 4.2 insulation value. Switch for fan must be labeled such as "Fan is to be left on to ensure indoor air quality".

WHOLE HOUSE VENTILATION CALCULATION per CEC 150 (O) & ASHRAE 62.2

0.03 X 7101 SF Htd. Area + 7.5 X (5 bedrms + 1) = 258 CFM req'

4 The thermal capacity of electric floor warming matt in bathrooms shall not exceed 2 Kilowatts or 7,000 BTU/HR and shall be controlled by a time-limiting device not exceeding 30 minutes. Provide a dedicated circuit with GFCI protection.

5 Furnaces installed in attics and crawl spaces must have an access platform (catwalk in attics), light, light switch, and receptacle in the space.

VENTILATION NOTES

1 All **bathroom fans** are to be used for **Local Ventilation Exhaust**. Minimum 50 CFM fan tested at a static pressure of .25 wc and rated @ 3 sones or less required to be installed. Fan must be attached to a minimum 4" duct and no longer than 70' of **flex** duct. Subtract 15' of allowed length for each elbow.

2 All **kitchen range hoods** are to be used for **Local Ventilation Exhaust**. Minimum 100 CFM tested at a static pressure of .25 wc and rated @ 3 sones or less required to be installed. Fan must be attached to a minimum 5" **smooth** duct and no longer than 85'. Subtract 15' of allowed length for each elbow.

3 This fan is to be used for **Whole Building Ventilation**. Minimum 70 CFM fan tested at a static pressure of .25 wc and rated @ 1 sone or less required to be installed. Fan must be attached to a minimum 5" duct and no longer than 70'. Subtract 15' of allowed length for each elbow. Switch for fan must be labeled to indicate the fan's required function such as "Fan is to be left on to ensure indoor air quality".

ELECTRICAL SYMBOL LEGEND

- DUPLEX OUTLET, +12" ABOVE FIN. FLR.,TAMPER RESISTANT, TYPICAL
- DUPLEX OUTLET W/ ARC FAULT INTERRUPT CIRCUIT
- DUPLEX OUTLET W/ GROUND FAULT INTERRUPT CIRCUIT
- DUPLEX OUTLET W/ GROUND FAULT & ARC FAULT INTERRUPT CIRCUIT
- DUPLEX OUTLET W/ WATERPROOF COVER
- DUPLEX OUTLET W/ ½ SWITCHED
- SPECIAL PURPOSE 220 V. OUTLET
- LIGHT SWITCH, +42" ABOVE FIN. FLR. TYPICAL
- LIGHT SWITCH, 3 WAY
- LIGHT SWITCH W/ DIMMER
- LIGHT SWITCH W/ VACANCY SENSOR
- LIGHT, CEILING SURFACE MOUNTED
- LIGHT, WALL SURFACE MOUNTED
- LIGHT, PENDANT
- LIGHT, RECESSED DOWNLIGHT
- LIGHT, RECESSED WALL WASHER
- LIGHT, RECESSED ADJUSTABLE
- LIGHT, RECESSED STEP
- LIGHT, LINEAR STRIP
- FAN/ LIGHT COMBO
- EXHAUST FAN
- GARBAGE DISPOSER
- TELEPHONE OUTLET
- TV OUTLET
- DATA OUTLET
- SMOKE DETECTOR
- COMBO SMOKE/ CO DETECTOR
- THERMOSTAT @ +60" ABOVE FIN. FLR.

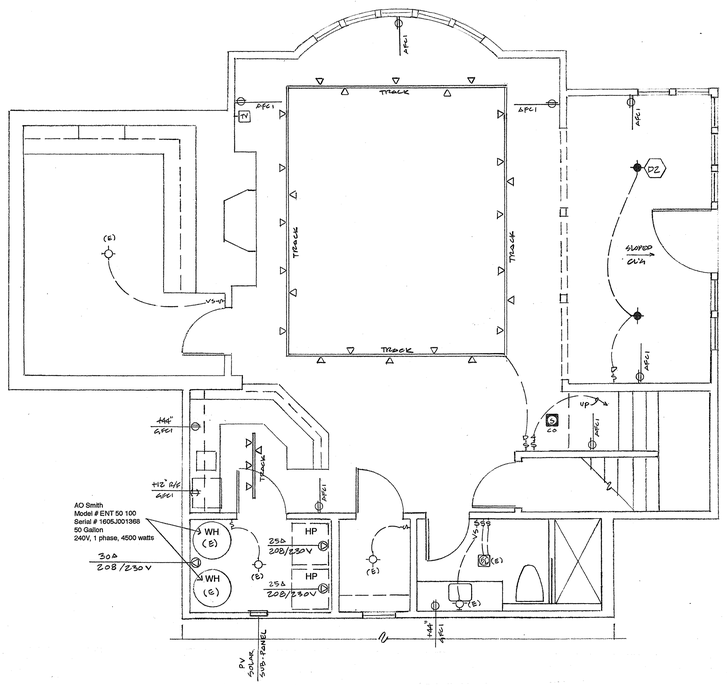

LOWER FLOOR - ELECTRICAL / LIGHTING SCHEMATIC

SCALE: 1/4" = 1'- 0"

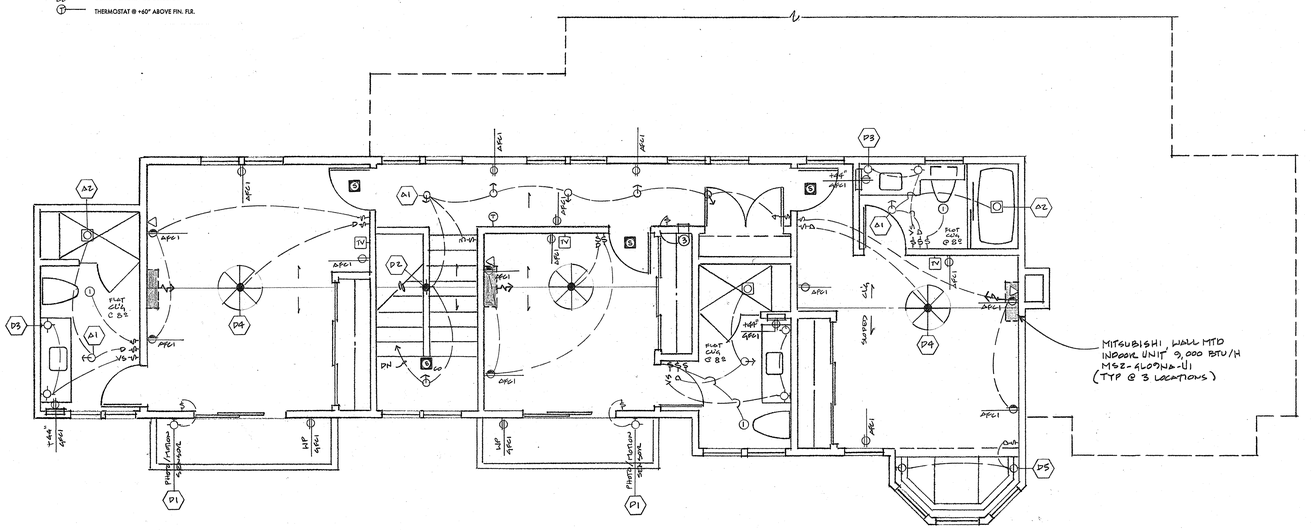

UPPER FLOOR - ELECTRICAL / LIGHTING SCHEMATIC

SCALE: 1/4" = 1'- 0"

M-SERIES — SUBMITTAL DATA: MXZ-3C30NAZ — MULTI-INDOOR INVERTER HEAT-PUMP SYSTEM — MITSUBISHI ELECTRIC

Job Name:
System Reference: Date:



ACCESSORIES
- 3/8" x 1/2" Port Adapter (MAC-A454JP-E)
- 1/2" x 3/4" Port Adapter (MAC-A405JP-E)
- 1/2" x 5/8" Port Adapter (MAC-A406JP-E)
- 1/4" x 3/8" Port Adapter (PAC-492PI)
- 3/8" x 5/8" Port Adapter (MAC-A407JP-E)
- MAKE Adapter (PAC-IF01MAK-E)
- Base Heater (PAC-645BH-E)

(For data on specific indoor units, see the MXZ-C Technical and Service Manual.)

Specifications			Model Name MXZ-3C30NAZ
	Unit Type		
Cooling* (Non-ducted / Ducted)	Rated Capacity	Btu/h	28,400 / 27,400
	Capacity Range	Btu/h	12,600-28,400 / 12,800-27,400
	Rated Total Input	W	2,980 / 2,980
Heating at 47°F* (Non-ducted / Ducted)	Rated Capacity	Btu/h	28,600 / 27,600
	Capacity Range	Btu/h	11,400-36,000 / 11,400-35,000
	Rated Total Input	W	2,100 / 2,220
Heating at 17°F* (Non-ducted/Ducted)	Rated Capacity	Btu/h	18,000 / 15,100
	Rated Total Input	W	2,120 / 2,140
Cooling Operation Range			
Heating Operation Range			
Voltage	Indoor - Outdoor S1-S2	V	AC 208 / 230
	Indoor - Outdoor S2-S3	V	DC 424
Compressor			INVERTER-driven Scroll Hermetic
Fan Motor (ECM)		F.L.A.	2.40
Sound Pressure Level	Cooling	dB(A)	52
	Heating		56
Refrigerant Pipe Size O.D. — Eight Ports	Liquid (High Pressure)	In (mm)	1/4 (12.7)
	Gas (Low Pressure)		A: 1/2 (8.59) ; B,C: 3/8 (9.52)
Max. Refrigerant Line Length		Ft (m)	230 (70)
Max. Piping Length for Each Indoor Unit		Ft (m)	82 (25)
Max. Refrigerant Pipe Height Difference	If IDU is Above ODU	Ft (m)	49 (15)
	If IDU is Below ODU		49 (15)
Control System			
Refrigerant			

* Rating Conditions per AHRI Standard
Cooling Indoor: 80°F (27°C) DB/67°F (19°C) WB — Outdoor: 95°F (35°C) DB
Cooling Outdoor: 95°F (35°C) DB/ 75°F (24°C) WB — Heating at 47°F (8°C) DB/43°F (6°C) WB — Heating at 17°F (-8°C) DB/15°F (-9°C) WB

OPERATING RANGE:

	Outdoor
Cooling	14 to 115°F (-10 to 46° C) DB
Heating	5 to 60° F (-15 to 16° C) WB

ENERGY EFFICIENCIES:

Indoor Unit Type	SEER	EER	HSPF	COP @ 47°F	COP @ 17°F
Non-ducted (09 + 09 + 09)	19.0	10.6	10.6	3.90	2.77
Ducted and Non-ducted	17.6	10.1	10.1	3.77	2.78
Ducted (09 + 09 + 09)	16.2	9.6	9.6	3.64	2.78

NOTES:
- Minimum of two Indoor Units must be connected to the MXZ-3C30NAZ.
- Minimum installed capacity cannot be less than 12,000 Btu/h.
- Total connected capacity must not exceed 130% of outdoor unit capacity.
- System can operate with only one Indoor Unit turned on.
- For Reference:
  - MXZ-C Technical & Service Manual for detailed specifications and additional information per Indoor Unit Combination.
  - MXZ Series Multi-Zone Indoor/Outdoor Combination Table for allowed unit combinations.

MXZ CONNECTION RULES:
- Only 1 MXZ may be used on any system.
- When an MXZ is connected, total connected capacity must be 100% or less.
- When an MXZ is connected, no P-Series indoor units can be used (PCA, PLA, or PEAD).

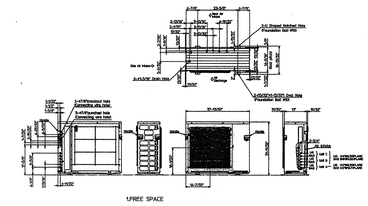

M-SERIES — SUBMITTAL DATA: MSZ-GL09NA-U1 — 9,000 BTUH WALL-MOUNTED INDOOR UNIT FOR MXZ-C MULTI-ZONE HEAT-PUMP SYSTEMS — MITSUBISHI ELECTRIC

Job Name:
System Reference: Date:



ACCESSORIES:
Indoor Unit
- Condensate Pump (BlueDiamond XBT-211(T2): 115/230V)
- Condensate Pump (Sauermann 9030-115/230): 115/230V)
- Anti-Allergy Enzyme Filter (MAC-408FT-E)
- Platinum Catalyst Deodorizing Filter (MAC-408FT-E)
- Drain Pan Level Sensor (DPLS2)

Controls
- Wireless Controller (MHK1)
- Wired Remote Controller PAR-31MAA (Requires MAC-333IF-E)
- Wireless Interface for Kumo cloud® (RAC-WIS01WF-E)
- Thermostat Interface (PAC-US444CN-1)

SPECIFICATIONS:

Rated Capacity*		
Cooling*	Btuh / W	9,000
Heating at 47°F*	Btuh / W	10,900

Rating Conditions per AHRI Standard
* Cooling (Indoor: 80° F (27° C) DB / 67° F (19° C) WB, Outdoor: 95° F (35° C) DB / 75° F (24° C) WB
* Heating at 47°F (Indoor: 70° F (21° C) DB / 60° F (16° C) WB, Outdoor: 47° F (8° C) DB / 43° F (6° C) WB

For data on specific indoor units (all ducted, all non-ducted, and both ducted and non-ducted) combinations, see the MXZ Technical and Service Manual.

Applications should be restricted to comfort cooling only: equipment cooling applications are not recommended for low ambient temperature conditions.

Electrical Power Requirements			
Voltage			208 / 230V, 1-Phase, 60 Hz
Minimum Circuit Ampacity (MCA)		A	1.0
Blower Motor (ECM)		F.L.A.	0.76
Blower Motor Output		W	30
Controls			
Field Drainpipe Size O.D.		in.(mm)	5/8 (15)
Airflow Rate (Quiet - Lo - Med - Hi - Super Hi)			
Cooling	DRY	CFM	145-170-237-321-399
	WET		109-134-201-266-364
Heating	DRY		145-170-237-321-406
Sound Pressure Level (Quiet - Lo - Med - Hi - Super Hi)			
Cooling		dB(A)	19-22-30-37-43
Heating			19-22-30-37-43
External Dimensions (H x W x D)		in.(mm)	11-5/8 x 31-7/16 x 9-1/8 (295 x 798 x 232)
Net Weight		Lbs.(kg)	29 (12)
External Finish			Munsell 1.0Y 9.2 / 0.2
Refrigerant Piping (Flared)			
Liquid (High Pressure)		in.(mm)	1/4 (6.35)
Gas (Low Pressure)			3/8 (9.52)

MITSUBISHI ELECTRIC COOLING & HEATING
1340 Satellite Boulevard Suwanee, GA 30024
Toll Free: 800-433-4822 www.mylinc.com

© 2016 Mitsubishi Electric US, Inc

MSZ-GL09NA-U1

Unit: in. (mm)

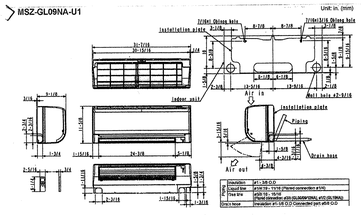

Insulation	3/4" (19.0) O.D.
Liquid line	ø1/4 (6.35) O.D. (Flared connection ø1/4)
Gas line	ø3/8 (9.52) O.D. (Flared connection ø3/8)
Drain hose	I.D. 13/16 (20) (Insertion depth: ø15/16 (24) O.D.)
Wall hole	ø2-9/16 (65) O.D. (Insertion ø1-1/8 (30) O.D.)

Michael Helm, AIA Architect & Associates
200 Seventh Avenue, #110 Santa Cruz, California 95062 (831) 476-5386

REMODEL & ADDITIONS TO THE:
RENFREW RESIDENCE
14500 ARNERICH HILL ROAD – APN 537-12-012
LOS GATOS, CALIFORNIA

LOWER FLOOR - ELECTRICAL SCHEMATIC
UPPER FLOOR - ELECTRICAL SCHEMATIC

11.19.22
1/4" = 1'-0"
MSH
2108

12

LIGHTING FIXTURE SCHEDULE – HOUSE

Tag	Description
A1	Recessed 4" adjustable retractable LED downlight. Manufacturer: WAC Lighting, Precision Multiples, 3000K Housing, MT-4LD116N-S-30-BK Trim, MT-4LD116T-WT Remarks: Order with bar hangers
A2	Recessed 4" LED shower light. Manufacturer: Halo, **To be determined** Lamp & Mfg: 3000K Remarks: Order with bar hangers
A3	Surface mounted under cabinet task LED light. Manufacturer: WAC Lighting, Line, 3000K Lamp & Mfg: 30" LN-LED30-30AL 24" LN-LED24-30-AL 12.25" LN-LED12-30-AL
A4	Recessed adjustable retractable multiple LED downlights. Manufacturer: WAC Lighting, Precision Multiples, 3000K Housing, MT-4LD116N-S-30-BK Trim, MT-4LD416T-WT Remarks: Order with bar hangers
F1	Surface Mounted 1.5' X 4' LED Wrap Around Manufacturer: Lithonia, LBL4 LP835 Lamp & Mfg: 3500K, 41 watt light engine, 4564 Nom. Lumens
D1	Wall mounted LED exterior light fixture. Manufacturer: **To be determined by Owner** Remarks: Provide photo/motion sensor on exterior circuits, Verify location of sensor prior to installation **Owner approval required prior to ordering.**
D2	Pendant mounted LED decorative light fixture. Manufacturer: **To be determined by Owner**
D3	Wall mounted LED decorative bath strip light. Manufacturer: WAC Lighting, Brink, WS-77618-AL Remarks: Mount vertically, **To be Owner Approved**
D4	Pendant mounted ceiling fan. Manufacturer: **To be determined by Owner**
D5	Wall mounted LED decorative sconce light fixture. Manufacturer: **To be determined by Owner**
D6	Ceiling surface mounted LED decorative light fixture. Manufacturer: **To be determined by Owner**
D7	Ceiling surface mounted LED decorative light fixture. Manufacturer: **To be determined by Owner**

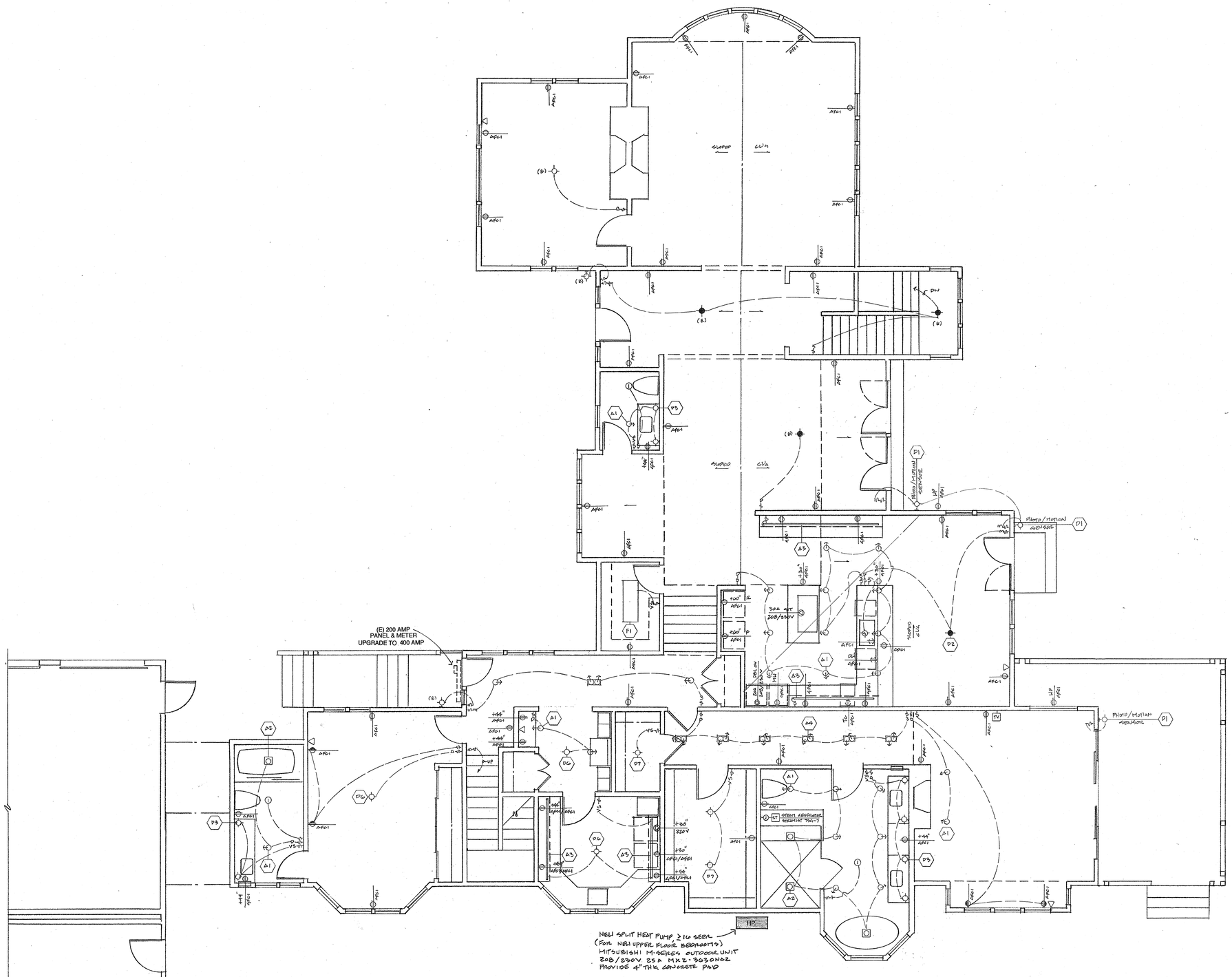

MAIN FLOOR - ELECTRICAL / LIGHTING SCHEMATIC
SCALE: 1/4" = 1'- 0"

Michael Helm, AIA Architect & Associates
200 Seventh Avenue, #110 Santa Cruz, California 95062 (831) 476-5386

REMODEL & ADDITIONS TO THE:
RENFREW RESIDENCE
14500 ARNERICH HILL ROAD – APN 537-12-012
LOS GATOS, CALIFORNIA

MAIN FLOOR - ELECTRICAL SCHEMATIC

11.14.22
1/4"=1'-0"
MH
2108

13

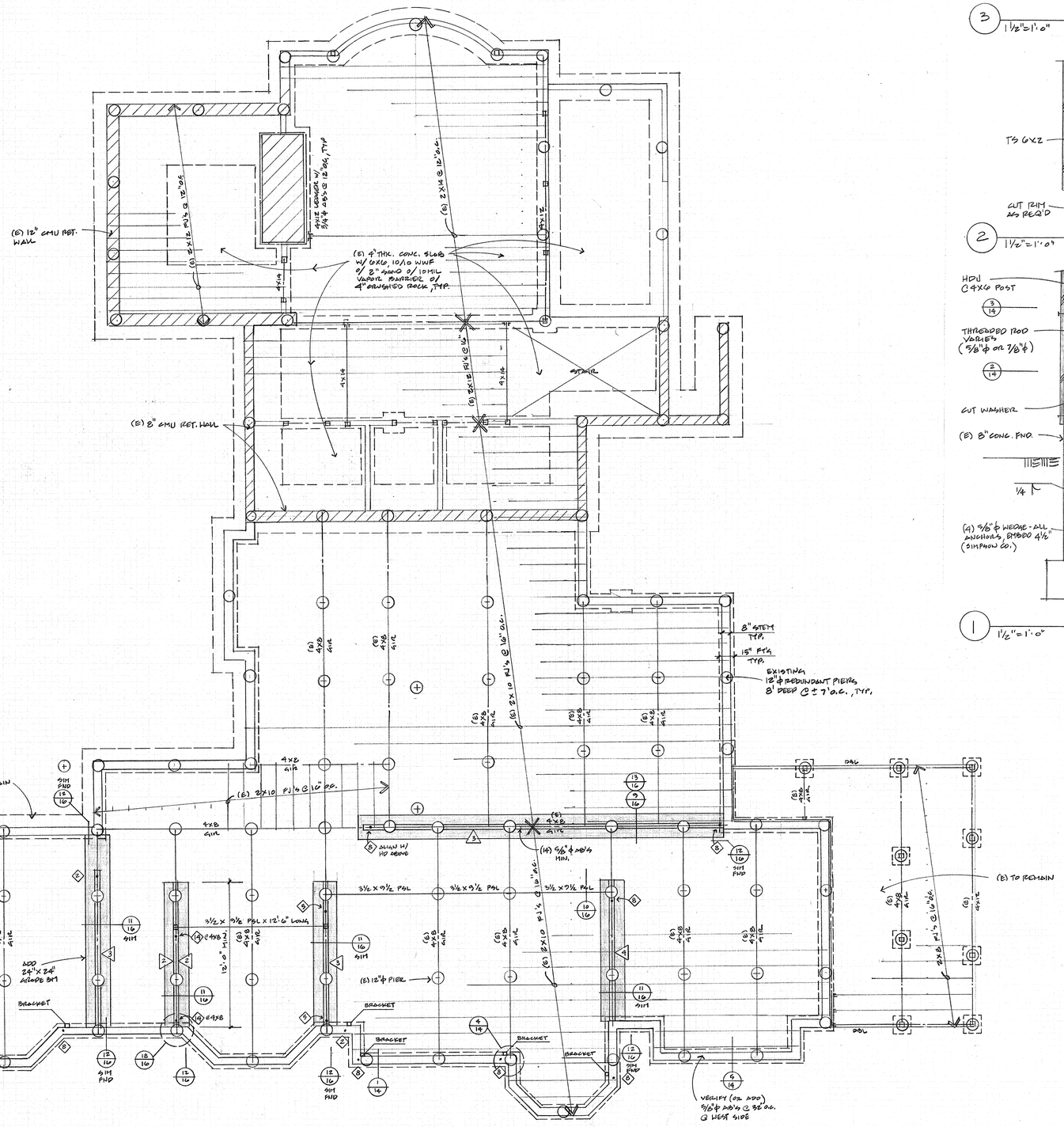

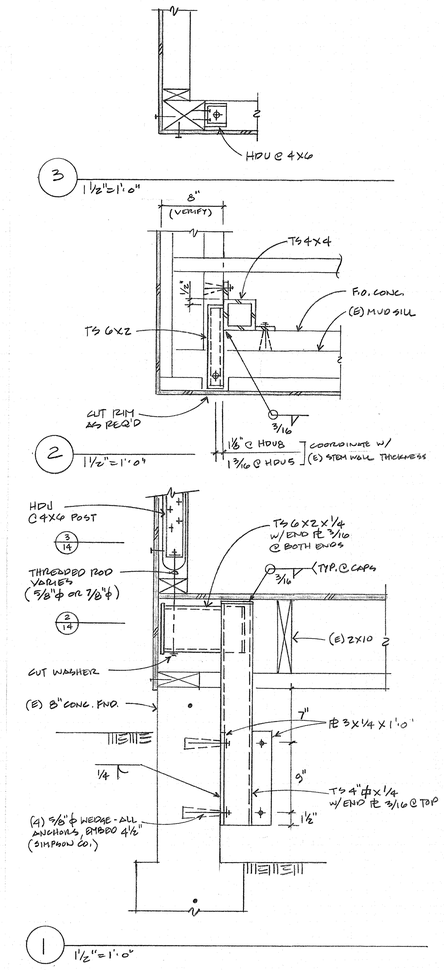

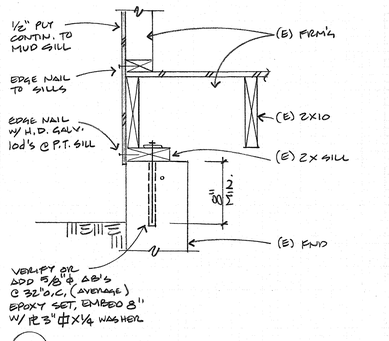

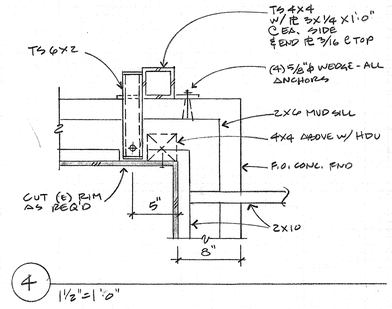

FOUNDATION / FLOOR FRAMING PLAN
SCALE: 1/4" = 1'-0"

ALL SOILS WORK AND FOUNDATION PLACEMENT SHALL COMPLY WITH THE RECOMMENDATIONS IN THE GEOTECHNICAL INVESTIGATION BY C2EARTH, PROJECT NO. 21137C-01R1, DATED JULY 29, 2022,

REVISIONS	BY

Michael Helm, AIA Architect & Associates
200 Seventh Avenue, #110 Santa Cruz, California 95062 (831) 476-5386

REMODEL & ADDITIONS TO THE:
RENFREW RESIDENCE
14500 ARNERICH HILL ROAD – APN 537-12-012
LOS GATOS, CALIFORNIA

FOUNDATION / FLOOR FRAMING PLAN

DATE	11.14.22
SCALE	1/4"=1'-0"
DRAWN	MAH
JOB	2108
SHEET	14
OF	SHEETS

STOCKDRAFTING FORM NO. 101-57

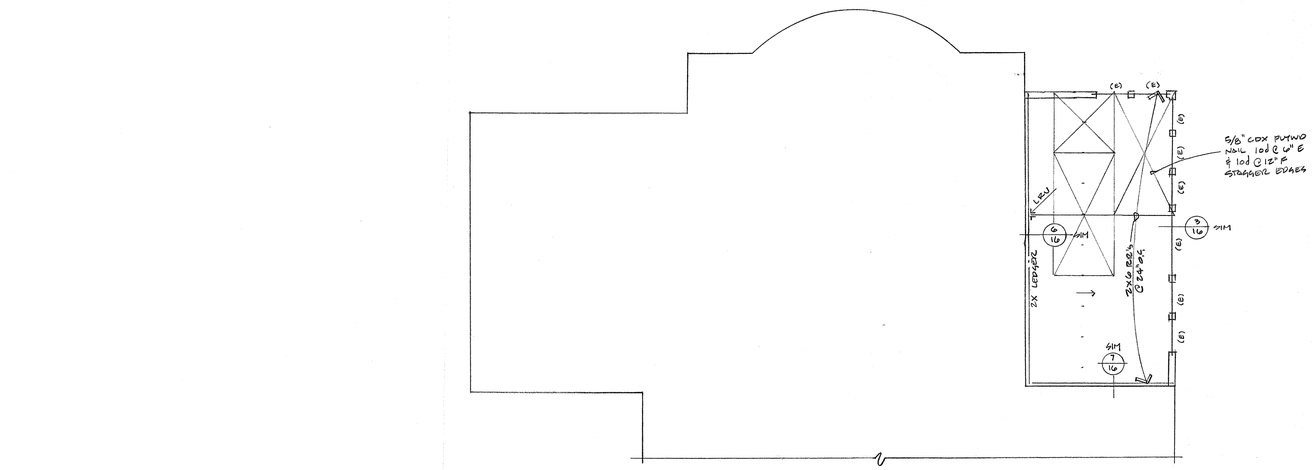

ROOF FRAMING PLAN
SCALE: 1/4" = 1'- 0"

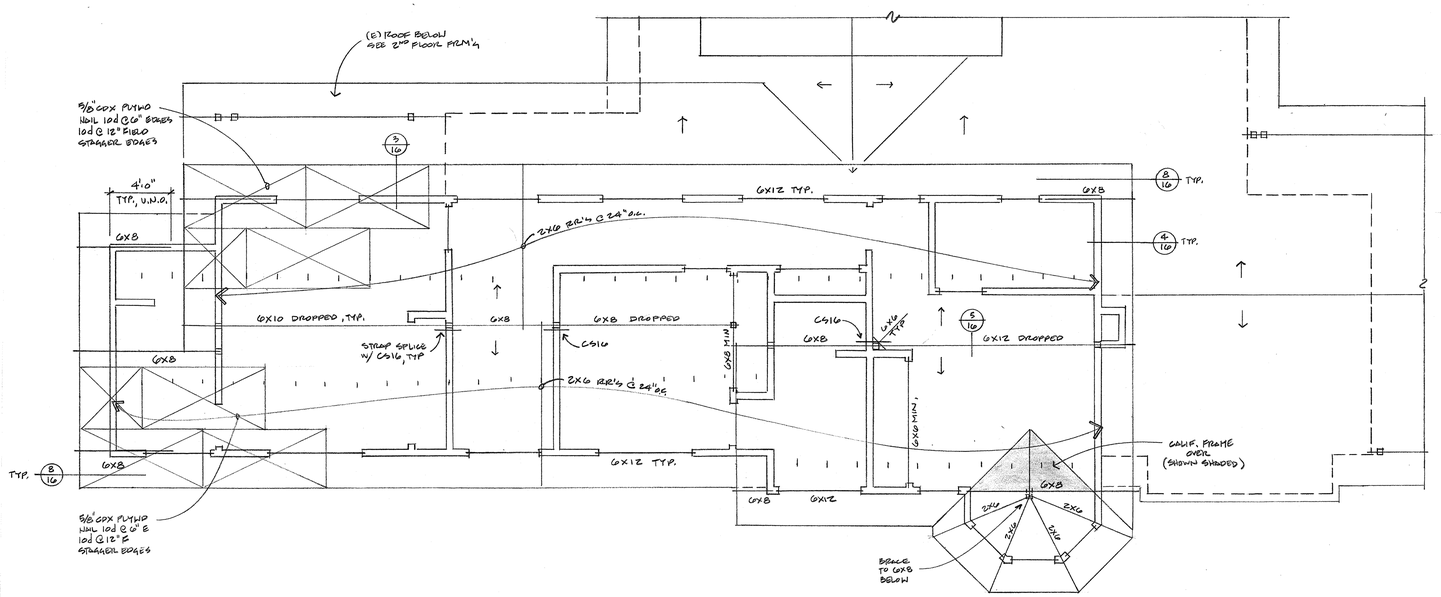

ROOF FRAMING PLAN
SCALE: 1/4" = 1'- 0"

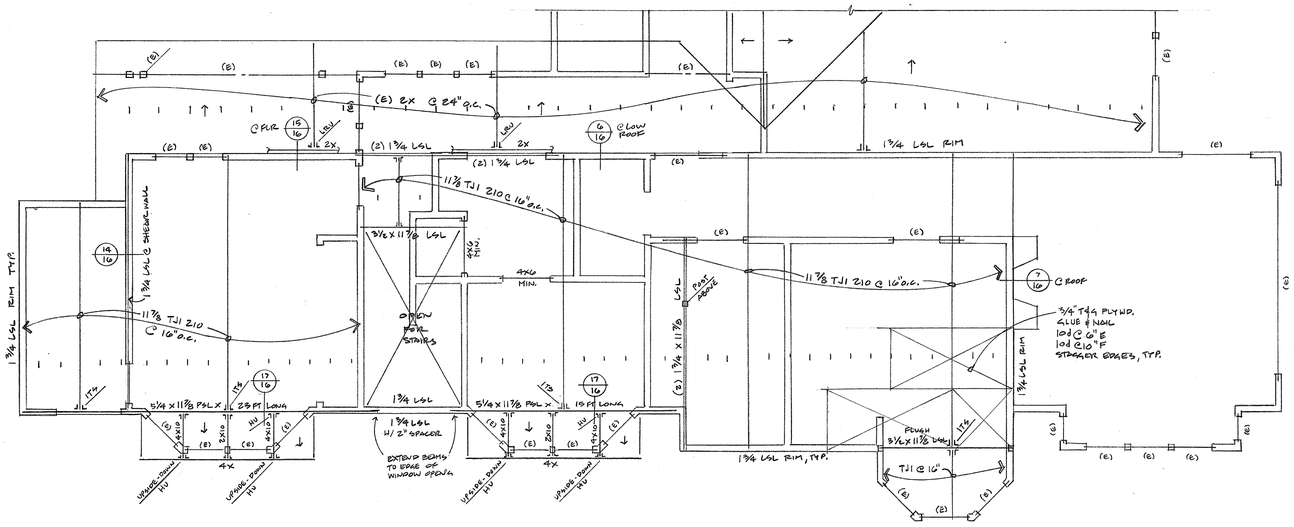

UPPER FLOOR FRAMING PLAN
SCALE: 1/4" = 1'-0"

Michael Helm, AIA Architect & Associates
200 Seventh Avenue, #110 Santa Cruz, California 95062 (831) 476-5386

REMODEL & ADDITIONS TO THE:
RENFREW RESIDENCE
14500 ARMERTH HILL ROAD - APN 537-12-012
LOS GATOS, CALIFORNIA

UPPER FLOOR FRAMING PLAN
ROOF FRAMING PLAN

11.14.22
1/4" = 1'-0"
MSH
2108

15

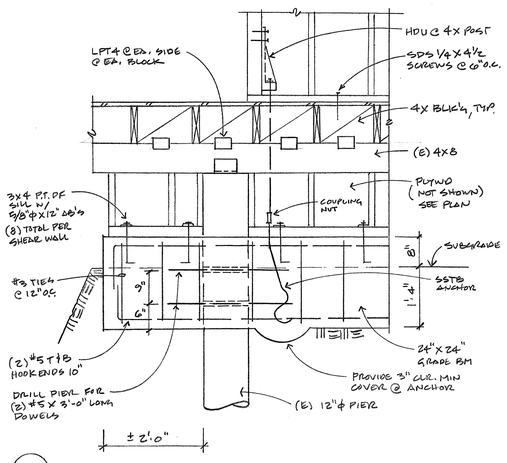

10 3/4"=1'-0"

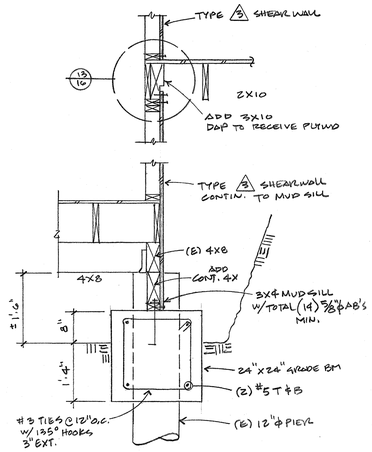

9 3/4"=1'-0"

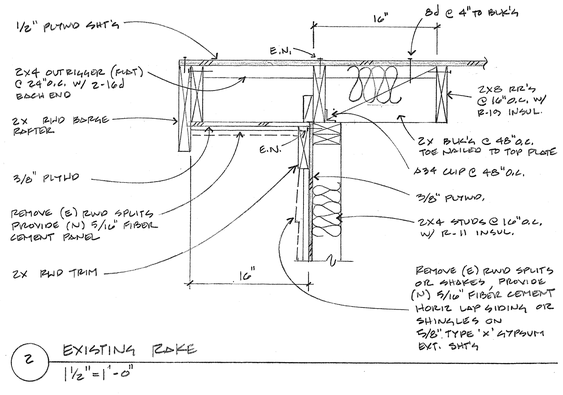

2 EXISTING RAKE
1 1/2"=1'-0"

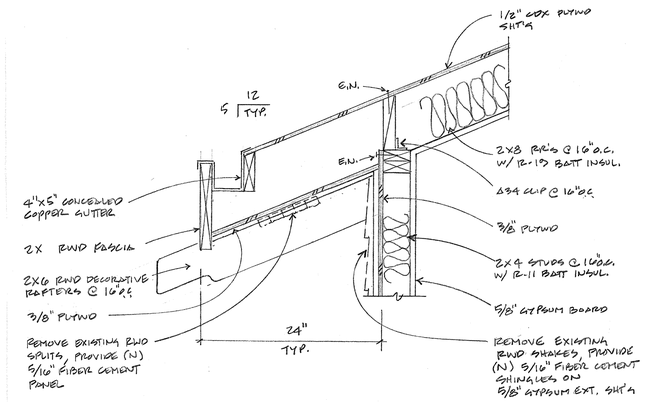

1 EXISTING EDVE
1 1/2"=1'-0"

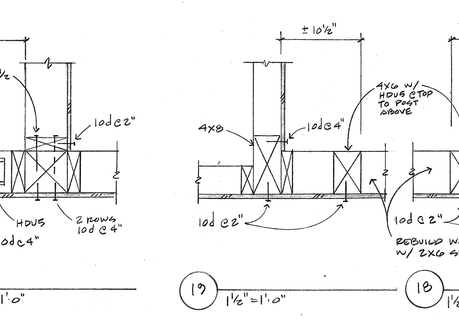

12 3/4"=1'-0"

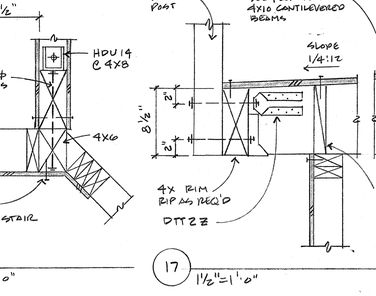

11 3/8"=1'-0"

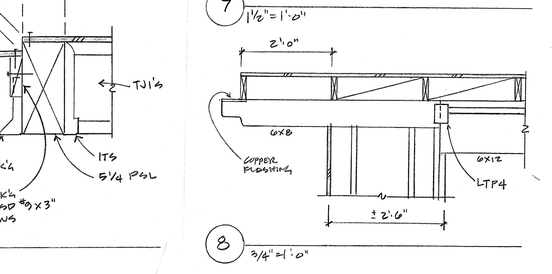

4 RAKE @ NEW CONSTRUCTION
1 1/2"=1'-0"

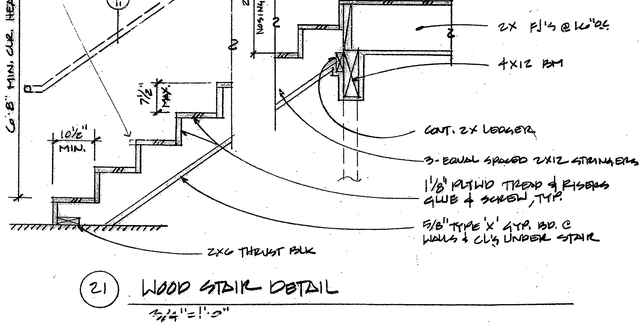

3 TYPICAL EAVE @ NEW CONSTRUCTION
1 1/2"=1'-0"

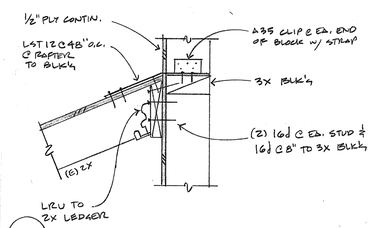

6 1/8"=1'-0"

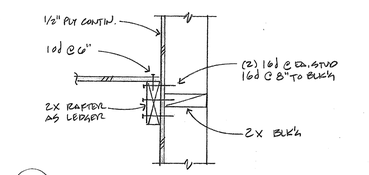

7 1 1/2"=1'-0"

8 3/4"=1'-0"

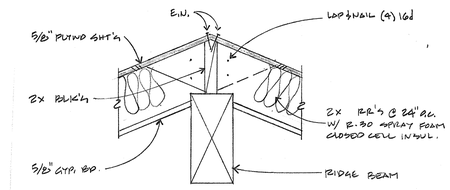

5 RIDGE @ NEW CONSTRUCTION
1 1/2"=1'-0"

21 WOOD STAIR DETAIL
3/4"=1'-0"

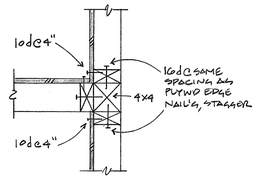

16 1 1/2"=1'-0"

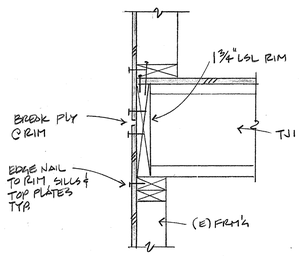

15 1 1/2"=1'-0"

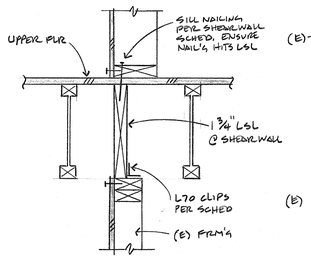

14 1 1/2"=1'-0"

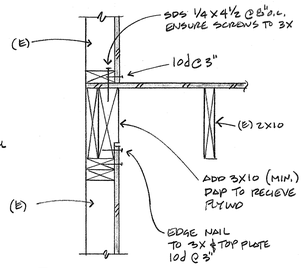

13 1 1/2"=1'-0"

20 1 1/2"=1'-0"

19 1 1/2"=1'-0"

18 1/2"=1'-0"

17 1 1/2"=1'-0"

Michael Helm, AIA Architect & Associates
200 Seventh Avenue, #110 Santa Cruz, California 95062 (831) 476-5386

REMODEL & ADDITIONS TO THE:
RENFREW RESIDENCE
14500 ARNERICH HILL ROAD APN 537-12-012
LOS GATOS, CALIFORNIA

CONSTRUCTION DETAILS

11.14.22
AS NOTED
MSH
2108

16

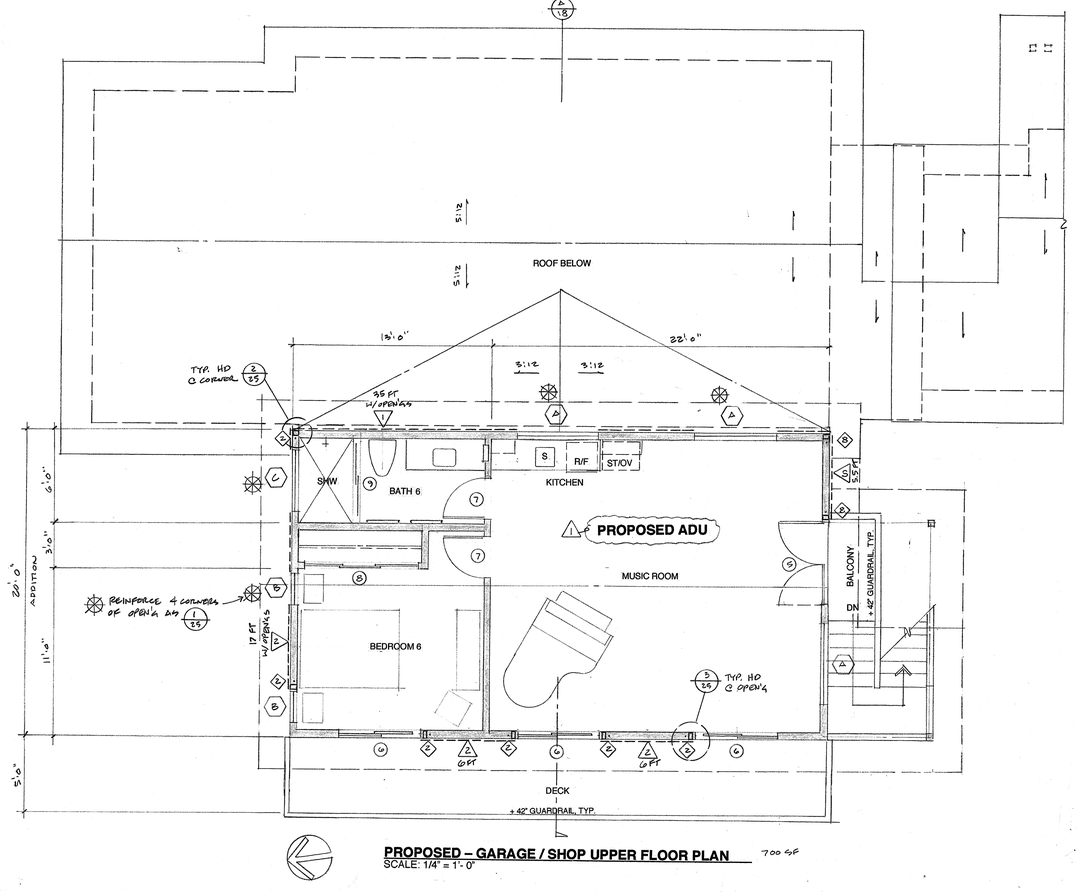

PROPOSED – GARAGE / SHOP UPPER FLOOR PLAN 700 SF
SCALE: 1/4" = 1'- 0"

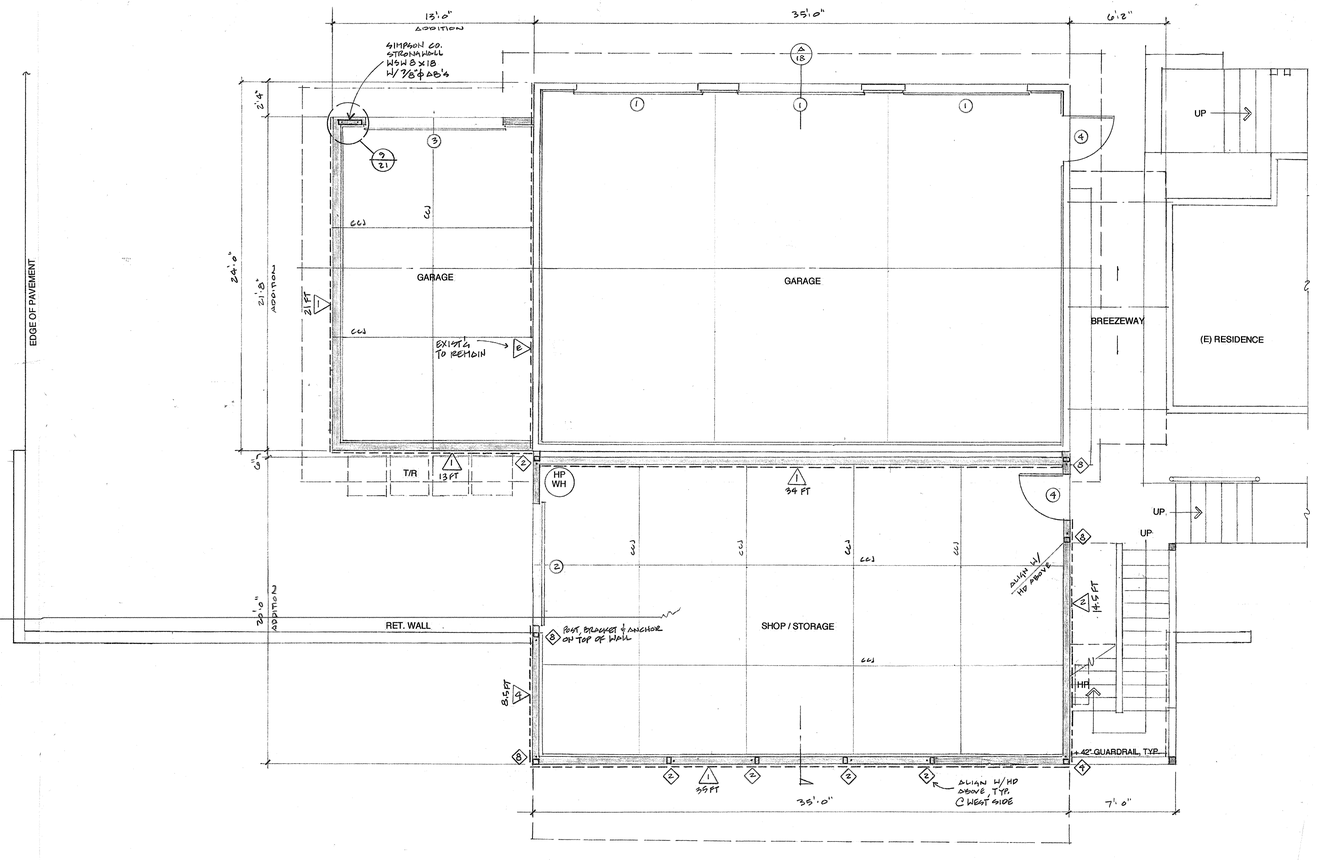

PROPOSED – GARAGE / SHOP LOWER FLOOR PLAN 700 SF
SCALE: 1/4" = 1'- 0"

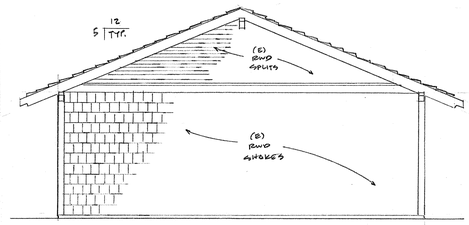

EXISTING – NORTH ELEVATION
SCALE: 1/4" = 1'- 0"

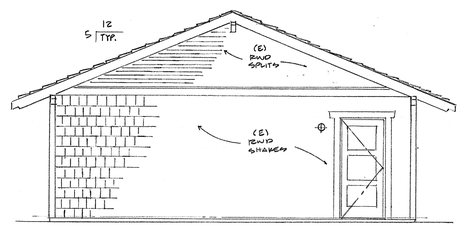

EXISTING – SOUTH ELEVATION
SCALE: 1/4" = 1'- 0"

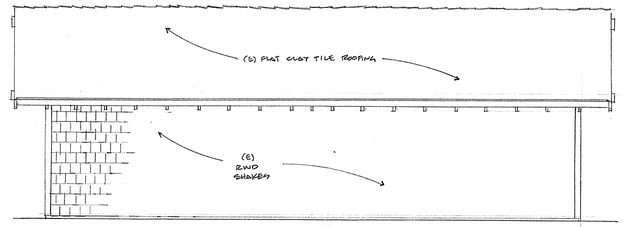

EXISTING – WEST ELEVATION
SCALE: 1/4" = 1'- 0"

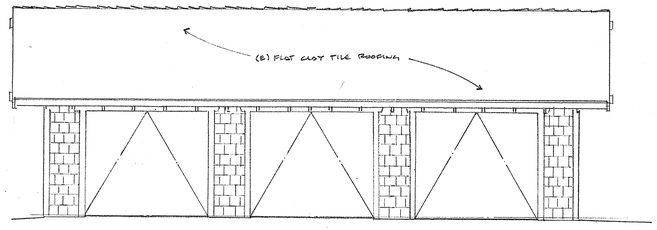

EXISTING – EAST ELEVATION
SCALE: 1/4" = 1'- 0"

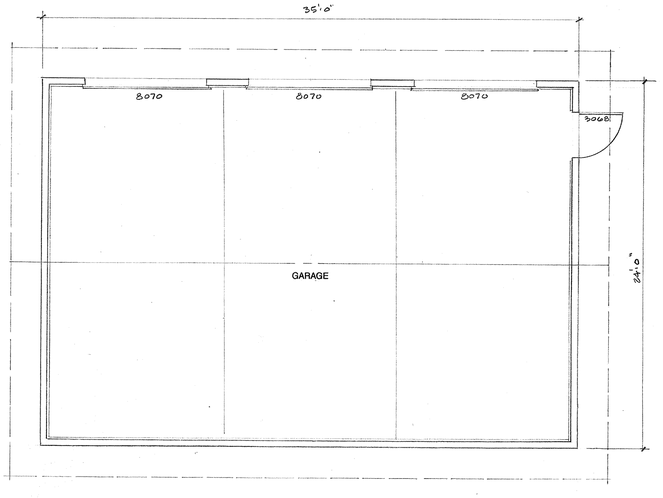

EXISTING – GARAGE FLOOR PLAN
SCALE: 1/4" = 1'- 0"

1	AK 11-28-22 MSH

Michael Helm, AIA Architect & Associates
200 Seventh Avenue, #110 Santa Cruz, California 95062 (831) 476-5386

REMODEL & ADDITIONS TO THE:
RENFREW RESIDENCE
14500 ARNERICH HILL ROAD – APN 537-12-012
LOS GATOS, CALIFORNIA

EXISTING - GARAGE FLOOR PLAN
- GARAGE EXT. ELEVATIONS
PROPOSED - GARAGE/SHOP FLR. PLANS

11.14.22
1/4" = 1'-0"
MSH
2108

17

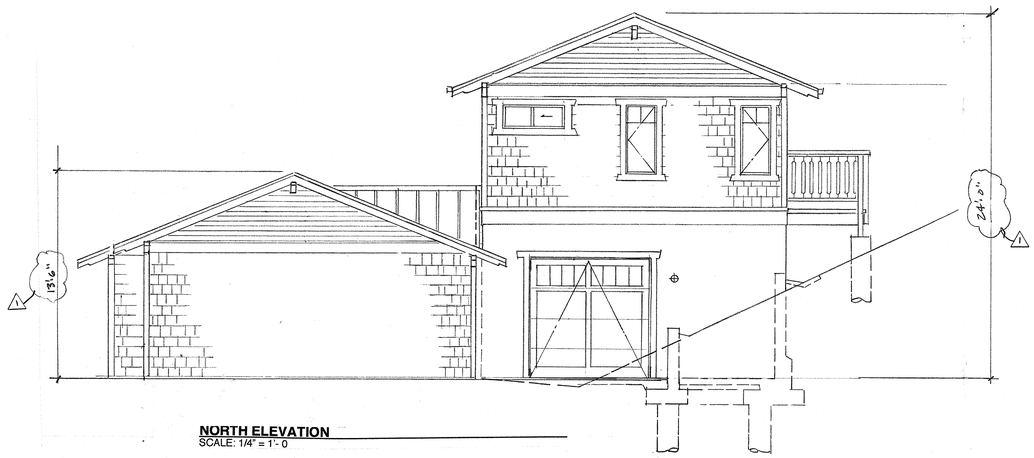

NORTH ELEVATION
SCALE: 1/4" = 1'- 0

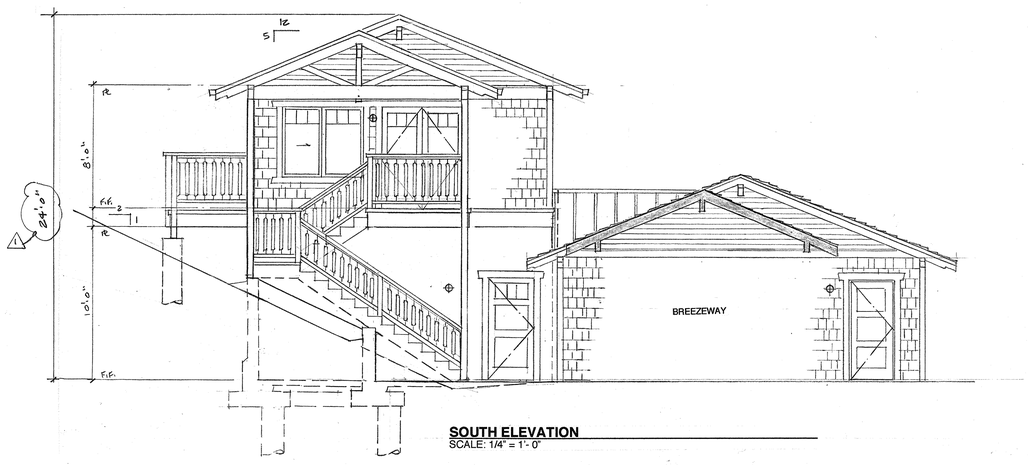

SOUTH ELEVATION
SCALE: 1/4" = 1'- 0"

STUCCO NOTE

3 coat, 7/8" Stucco finish over two layers of grade 'D' paper on 'TYVEK' house wrap on 7/16" CDX plywood or OSB sheathing, nailed w/10d @ 6" o.c. edges and 12" o.c. field, U.N.O., on 2 X 6 studs @ 16" o.c. with R-21 high density batt insulation. Provide a minimum 26 gauge galvanized corrosion resistant weep screed with a minimum vertical attachment of 3-1/2" provided at or below the foundation plate line at the exterior walls. The screed shall be placed a minimum of 4 inches above earth or 2 inches above paved areas. **Wall construction shall meet SFM12-7A-1 requirements.**

STANDING SEAM METAL ROOFING

Peterson Aluminum Corp., PAC-CLAD 18" wide snap-clad 24 gauge Standing Seam Metal Roofing. UL-580 Class 90 wind uplift, UL-Class A fire rated, installation per mfg. Specs over Dbl layer 30 lb. Felt over 5/8" CDX plywood sheathing nailed w/ 10d @ 6" o.c. edges and 12" o.c. field, U.N.O., to 2X Rafters @ 24" o.c. or 2X Pre-fabricated trusses @ 24" o.c. with R-30 closed cell polyurethane spray foam insulation. Underlayment shall comply with ASTM D226 Type I; ASTM Type I, II, III or IV; ASTM D6757, and shall bear a label indicating compliance to the standard designation. **Eave construction shall meet SFM 12-7A-3 requirements.**

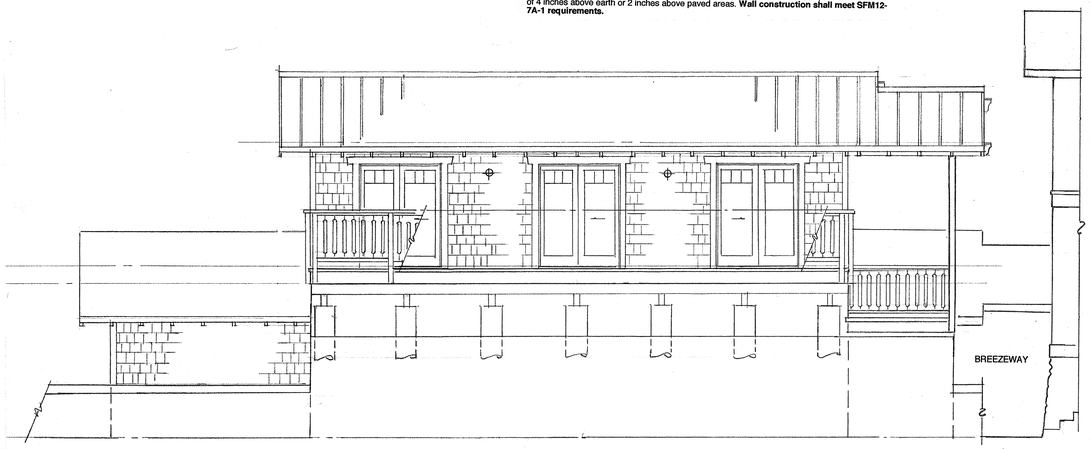

WEST ELEVATION
SCALE: 1/4" = 1'- 0"

Color/Materials Board

Roof PETERSON ALUM. CORP, 18" WIDE, 24GA. PAC-CLAD STANDING SEAM METAL ROOFING
Manufacture & Material / Product Name, Number: DARK BRONZE REFLECTIVITY 0.29

Door & Window Frames, Railings
JELD-WEN CLAD WOOD
Manufacture / Number
Color Name, LRV: CHESTNUT BRONZE LRV 6%

Trim JAMES HARDIE - FIBER CEMENT - PAINTED
Manufacture / Number: SHERWIN WILLIAMS
Color Name, LRV: OLIVE SW1166, LRV 30%

Exterior Walls JAMES HARDIE - FIBER CEMENT HORIZONTAL LAP OR SHINGLE SIDING - PAINTED
Manufacture / Number: SHERWIN WILLIAMS
Color Name, LRV: CARDAMOM SW2727, LRV 7%

Architectural Accents (Ex. Stone Veneer)
TAHOE RIVER ROCK (EXISTING TO REMAIN)
Manufacture / Number: N/A
Color Name, LRV: N/A

Retaining Walls (E) RIVER ROCK (SEE ABOVE)
(F) STUCCO FINISH - PAINTED
Manufacture / Number: SHERWIN WILLIAMS
Color Name, LRV: OLIVE SW1166, LRV 30%

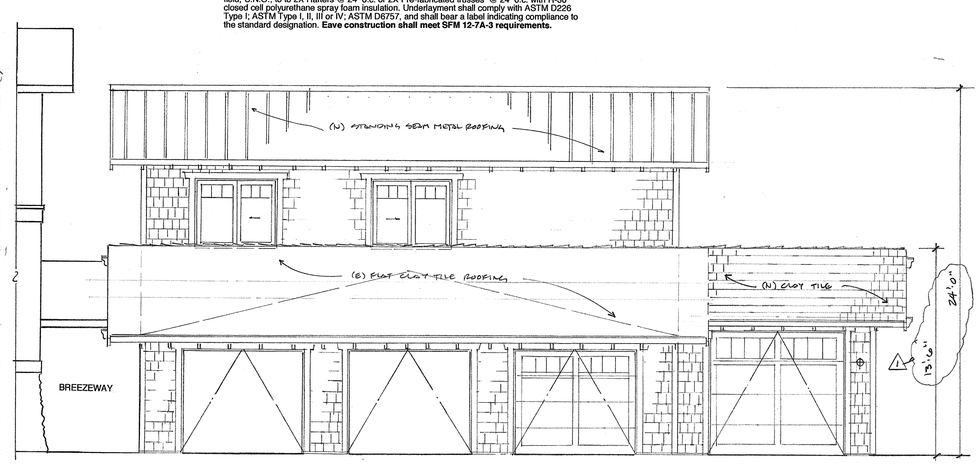

EAST ELEVATION
SCALE: 1/4" = 1'- 0"

PLUMBING FIXTURE MAXIMUM FLOW RATES

TOILET	1.28 GPF
LAVATORY FAUCETS	1.2 GPM @ 60 PSI
TUB / SHOWER VALVES	1.8 GPF @ 80 PSI
KITCHEN FAUCETS	1.8 GPM @ 60 PSI

PLUMBING FIXTURE CONNECTION SCHEDULE

SYMBOL	TYPE	WASTE	VENT	HOT	COLD
LV	LAVATORY	1-1/2"	1-1/2"	1/2"	1/2"
WC	TOILET	3"	2"	-	1/2"
T/SH	TUB / SHOWER	2"	1-1/2"	1/2"	1/2"
KS	KITCHEN SINK	2"	1-1/2"	1/2"	1/2"
WS	WASHER	1-1/2"	1-1/2"	1/2"	1/2"
HB	HOSE BIBB				3/4"

FINISH SCHEDULE NOTES

1. VERIFY ALL FINISHES WITH OWNER
2. ALL CLOSET FLOORING AND BASEBOARDS SHALL MATCH THE ADJACENT ROOM
3. PROVIDE A SMOOTH, HARD, NON-ABSORBENT SURFACE OVER MOISTURE RESISTANT UNDERLAYMENT TO A HEIGHT OF 72" ABOVE THE DRAIN OUTLET IN ALL SHOWER AND TUB LOCATIONS.
4. UNDERLYING BASE FOR ALL TILE SHALL BE CEMENT, FIBER-CEMENT OR GLASS MAT GYPSUM BACKER BOARDS IN COMPLIANCE WITH ASTM C1178, C1288 OR C1325 AND INSTALLED IN ACCORDANCE WITH THE MANUFACTURER RECOMMENDATIONS. IT SHALL BE USED AS A BASE FOR WALL TILE IN TUB AND SHOWER AREAS AND AS CEILING PANELS IN SHOWER AREAS.

VENTILATION NOTES

1. All **bathroom fans** are to be used for **Local Ventilation Exhaust**. Minimum 50 CFM fan tested at a static pressure of .25 wc and rated @ 3 sones or less required to be installed. Fan must be attached to a minimum 4" duct and no longer than 70' of **flex** duct. Subtract 15' of allowed length for each elbow.

DOOR SCHEDULE – SHOP / GARAGE

SYM	SIZE	TYPE	QUAN.	REMARKS
1	8070	'Carriage Style' Sectional Garage Door	3	Paint Grade w/ 4-lite **Tempered glass panel** w/ elec. auto opener
2	8080	'Carriage Style' Sectional Garage Door	1	Paint Grade with **Tempered glass panel** w/ elec. auto opener
3	9080	'Carriage Style' Sectional Garage Door	1	Paint Grade with **Tempered glass panel** w/ elec. auto opener
4	3068	Exterior S.C., 3-Panel	2	Paint Grade, with **Tempered glass panel**
5	Pair 2868	Exterior single lite French doors	1	Clad/Wood Sash, Low-E dbl. insulated **Tempered glass**
6	5468	Exterior single lite OX Sliding Patio Doors	3	Clad/Wood Sash, Low-E dbl. insulated **Tempered glass**
7	2868	Interior S.C., 3-Panel	2	Stain Grade, by Sun Mountain, Inc.
8	3W - 2868	Interior S.C., 3-Panel Sliding Bi-pass Closet Doors	1	Stain Grade, by Sun Mountain, Inc.
9	5670	Bi-Pass Sliding Shower Doors	1	3/8" Clear 'Frameless' **Tempered glass**, Provide shop drawings for approval

WINDOW SCHEDULE – SHOP / GARAGE

SYM	SIZE	TYPE	QUAN.	REMARKS
A	2046	OX Slider	3	Clad/Wood Sash, Low-E dbl. insulated **Tempered glass**
B	2046	Casement	2	Clad/Wood Sash, Low-E dbl. insulated **Tempered glass**
C	4016	OX Slider	1	Clad/Wood Sash, Low-E dbl. insulated **Tempered glass**

Jeld-Wen – Clad Wood sash windows & doors overall standards comply with ANSI/ AAMA/ WDMA/CSA101/1.S.2 / A440-05 / A440-08 / A40-11

a. All units are Gold Label tested & certified with label attached to frame per AAMA standards per CRC, Section 609.3, installation per AAMA 2400
b. All insulated glass units conform to ASTM E2188 / E2190, NFRC certified and labeled.
c. Safety Glazing testing and labeling per CRC, Sections 308.1 & 308.4
d. Energy testing and certification per CEnC, Section 110.6
e. Verify rough openings and window / door sizes prior to ordering.

Note: The NFRC label which states the required U-value and SGHC for all fenestration products shall not be removed prior to inspection or the removal by a building inspector and shall reflect the values listed in the energy report.

CONSTRUCTION SCHEDULE – GARAGE / SHOP

FOUNDATIONS	12" wide X 27" deep concrete grade beam with 2 - #5 bars T & B w/ #3 ties @ 6' o.c. on 18" diameter drilled piers X 8' deep (min.) CONCRETE SLABS: 5" thick concrete slab w/ #4 bars @ 16" o.c. each way, on 15 mil vapor barrier on 6" crushed rock. CONCRETE MIX: Substitute Portland Cement with recycled fiyash, 35% by volume, typical. Keep receipts for Inspector verification. TREATED LUMBER: Substitute ACQ pressure treatment for CCA products, typical. FORM BOARDS: Clean and re-use for scaffolding, forms, blocking, etc... FORM RELEASE AGENT: Use Non-toxic soy based 0-VOC form release agent by BIO-GUARD CO. or Architect approved equal.
FLOORS	TJI's @ 16" o.c., with ¾" T&G plywood subfloor glued and nailed w/ 10d @ 6" o.c. edges & 10" o.c. field, U.N.O. with R-19 batt insulation.
LOWER WALLS	7/8" Stucco finish over two layers of grade 'D' paper on 'TYVEK' house wrap on 7/16" CDX plywood or OSB sheathing, nailed w/10d @ 6" o.c. edges and 12" o.c. field, U.N.O., on 2 X 6 studs @ 16" o.c. with R-21 high density batt insulation, 1/2" gypsum wallboard interior finish, typical. Use low/No VOC exterior/interior paints. **Wall construction shall meet SFM12-7A-1 requirements.**
UPPER WALLS	5/16"-James Hardie fiber cement horizontal siding or shingles over 'TYVEK' house wrap on 5/8" Type 'X' exterior gypsum sheathing on 7/16" CDX plywood or OSB sheathing, nailed w/10d @ 6" o.c. edges and 12" o.c. field, U.N.O., on 2 X 6 studs @ 16" o.c. with R-23 high density batt insulation, 1/2" gypsum wallboard interior finish, typical. Use low/No VOC exterior/interior paints. **Wall construction shall meet SFM12-7A-1 requirements.**
ROOF	Class B (min.) standing seam metal roofing, install per mfg. specs over Dbl. layer 30 lb. felt over 5/8" CDX plywood sheathing nailed w/ 10d @ 6" o.c. edges and 12" o.c. field, U.N.O., to 2X Pre-fabricated trusses @ 24" o.c. with R- 30 closed cell polyurethane spray foam insulation. Underlayment shall comply with ASTM D226 Type I; ASTM Type I, II, III or IV; ASTM D6757, and shall bear a label indicating compliance to the standard designation. **Eave construction shall meet SFM 12-7A-3 requirements.**
GUTTERS & DOWNSPOUTS	16 oz. copper beveled gutters w/ 2" diameter round downspouts deposit into existing landscaped areas. **Gutters shall be provided with leaf/debris protection.**
ROOF / WALL FLASHINGS	16 oz. copper where shown or required. Pan flash all ext. door sills with 16 oz. copper solder all joints, typical
WINDOWS & EXT. GLASS DRS.	Jeld-Wen – Alum. Clad/Wood sash with Dbl. insulated **Tempered** Low-E glass, provide screens at all operable windows. **Exterior door assemblies shall conform to SFM 12-7A-1 requirements.**
INSULATION	FLOORS R-19 fiberglass batts EXT. WALLS R-23 high density fiberglass batts INT. WALLS 3-1/2" fiberglass sound batts ROOFS R-30 closed cell polyurethane spray foam
ROOF JACKS	Provide neoprene gaskets and 16 oz. copper roof jack / rain cap, typical. All exhaust vents shall be located a min. of 4' from or 1' above all roof or wall openings per CMC. All plumbing vents shall be located a min. of 10' from or 3' above all roof or wall openings per CPC.
WALL PENETRATIONS	Use weatherproofing wall jacks by QUICKFLASH or approved equal for plumbing, electrical and mechanical penetrations.
PAINTS, STAINS, ADHESIVES & SEALERS	Use Low / No VOC, water based products and solvent-free adhesives, typical.
PLUMBING	Install Low-flow toilets. Install Low-flow shower heads with chlorine filters.
CABINETS & TRIM	Use formaldehyde-free particle board and MDF by MEDITE or approved equal for all cabinets and trim applications

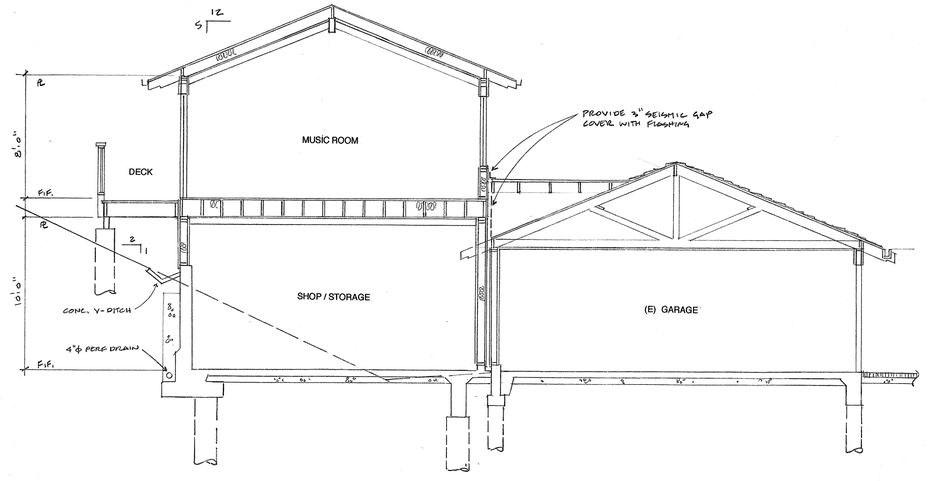

BUILDING SECTION
SCALE: 1/4" = 1'- 0"

Michael Helm, AIA Architect & Associates
200 Seventh Avenue, #110 Santa Cruz, California 95062 (831) 476-5386

REMODEL & ADDITIONS TO THE:
RENFREW RESIDENCE
14500 ARNERICH HILL ROAD – APN 537-12-012
LOS GATOS, CALIFORNIA

garage/shop - ext. elevations

11.14.22
1/4"=1'-0"
MEH
2108

18

M-SERIES — SUBMITTAL DATA: MXZ-3C30NAZ

MULTI-INDOOR INVERTER HEAT-PUMP SYSTEM — MITSUBISHI ELECTRIC

Job Name:

System Reference: Date:



Outdoor Unit: MXZ-3C24NA

ACCESSORIES
- o 3/8" x 1/2" Port Adapter (MAC-A454JP-E)
- o 1/2" x 3/8" Port Adapter (MAC-A456JP-E)
- o 1/2" x 5/8" Port Adapter (MAC-A458JP-E)
- o 1/4" x 3/8" Port Adapter (PAC-493PI)
- o 3/8" x 5/8" Port Adapter, (PAC-SG76RJ-E)
- o M-NET Adapter (PAC-IF013BNT-E)
- o Base Heater (PAC-645BH-E)

(For data on specific indoor units, see the MXZ-C Technical and Service Manual.)

Specifications			Unit Type	Model Name
				MXZ-3C30NA2
Cooling* (Non-ducted / Ducted)	Rated Capacity	Btu/h		28,400 / 27,400
	Capacity Range	Btu/h		12,600-28,400 / 12,600-27,400
	Rated Total Input	W		2,650 / 2,860
Heating at 47°F* (Non-ducted / Ducted)	Rated Capacity	Btu/h		28,600 / 27,600
	Capacity Range	Btu/h		11,400-36,000 / 11,400-35,000
	Rated Total Input	W		2,150 / 2,220
Heating at 17°F* (Non-ducted/Ducted)	Rated Capacity	Btu/h		16,000 / 15,100
	Rated Total Input	W		2,120 / 2,140
Electrical Requirements	Power Supply	Voltage, Phase, Hertz		208 / 230 V, 1-Phase, 60 Hz
	Recommended Fuse Breaker Size	A		30
	MCA	A		25
Voltage	Indoor - Outdoor S1-S2	V		AC 208 / 230
	Indoor - Outdoor S2-S3	V		DC 24
Compressor				INVERTER-driven Scroll Hermetic
Fan Motor (ECM)		F.L.A.		2.45
Sound Pressure Level	Cooling	dB(A)		52
	Heating			59
External Dimensions (H x W x D)		in (mm)		54-1/2 (1,384) x 37-3/8 (950) x 13 (330)
Net Weight		Lbs (kg)		154 (70)
External Finish				Munsell 1.0Y 9.2 / 0.2
Refrigerant Pipe O.D. — Eight Ports	Liquid (High Pressure)	In (mm)		1/4 (12.7)
	Gas (Low Pressure)			A: 1/2 (9.52) , B, C: 3/8 (9.52)
Max. Refrigerant Line Length		Ft (m)		230 (70)
Max. Piping Length for Each Indoor Unit		Ft (m)		82 (25)
Max. Refrigerant Pipe Height Difference	If IDU is Above ODU	Ft (m)		49 (15)
	If IDU is Below ODU			49 (15)
Connection Method				Flare Connection
Refrigerant				R410A

* Rating Conditions per AHRI Standard:
Cooling | Indoor: 80°F (27°C) DB/67°F (19°C) WB | Outdoor: 95°F (35°C) DB
Heating at 47°F | Indoor: 70°F (21°C) DB/60°F (16°C) WB | Outdoor: 47°F (8°C) DB/43°F (6°C) WB
Heating at 17°F | Indoor: 70°F (21°C) DB | Outdoor: 17°F (-8°C) DB/15°F (-9°C) WB

OPERATING RANGE:

	Outdoor
Cooling	14 to 115° F (-10 to 46° C) DB
Heating	5 to 60° F (-15 to 19° C) WB

ENERGY EFFICIENCIES:

Indoor Unit Type	SEER	EER	HSPF	COP @ 47°F	COP @ 17°F
Non-ducted (06 + 06 + 09)	19.0	10.6	10.6	3.90	2.77
Ducted and Mini-ducted	17.6	10.1	10.1	3.77	2.78
Ducted (08 + 09 + 09)	16.2	9.6	9.6	3.64	2.78

NOTES:
- Minimum of two Indoor Units must be connected to the MXZ-3C30NA2.
- Minimum installed capacity cannot be less than 12,000 Btu/h.
- Total connected capacity must not exceed 130% of outdoor unit capacity.
- System can operate with only one Indoor Unit turned on.
- Operation provided at 208/230V.
- For Reference:
  - MXZ-C Technical & Service Manual for detailed specifications and additional information per Indoor Unit Combination.
  - MXZ Series Multi-Zone Indoor/Outdoor Combination Table for allowed unit combinations.

MXZ CONNECTION RULES:
- Only 1 MXZ may be used on any system.
- When an MXZ is connected, total connected capacity must be 100% or less.
- When an MVZ is connected, no P-Series indoor units can be used (PCA, PLA, or PEAD).

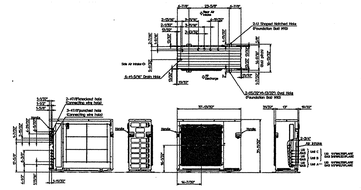

M-SERIES — SUBMITTAL DATA: MSZ-GL09NA-U1

9,000 BTU/H WALL-MOUNTED INDOOR UNIT FOR MXZ-C MULTI-ZONE HEAT-PUMP SYSTEMS — MITSUBISHI ELECTRIC

Job Name:

System Reference: Date:



Indoor Unit: MSZ-GL09NA-U1



Wireless Remote Controller

SPECIFICATIONS:

Rated Capacity*		
Cooling*	Btu/H	9,000
Heating at 47° F†	Btu/H	10,900

Rating Conditions per AHRI Standard:
* Cooling | Indoor: 80° F (27° C) DB / 67° F (19° C) WB, Outdoor: 95° F (35° C) DB / 75° F (24° C) WB
† Heating at 47°F | Indoor: 70° F (21° C) DB / 60° F (16° C) WB, Outdoor: 47° F (8° C) DB / 43° F (6° C) WB

For data on specific indoor units (all-ducted, all non-ducted, and both ducted and non-ducted) combinations, see the MXZ Technical and Service Manual.

Applications should be restricted to comfort cooling only; equipment cooling applications are not recommended for low ambient temperature conditions.

Electrical Power Requirements			208 / 230V, 1-Phase, 60 Hz
Minimum Circuit Ampacity (MCA)		A	1.0
Blower Motor (ECM)		FLA	0.76
Blower Motor Output		W	30
Field Drainage Size O.D.		In.(mm)	5/8 (15)
Air Flow Rate (Quiet / Lo / Med / Hi / Super Hi)			
Cooling	DRY	CFM	145-170-237-321-399
	WET		109-134-201-286-364
Heating	DRY		145-170-237-321-406
Sound Pressure Level (Quiet / Lo / Med / Hi / Super Hi)			
Cooling		dB(A)	19-22-30-37-43
Heating			19-22-30-37-43
External Dimensions (H x W x D)		In.(mm)	11-5/8 x 31-7/16 x 9-1/8 (295 x 798 x 232)
Net Weight		Lbs.(kg)	29 (12)
External Finish			Munsell 1.0Y 9.2 / 0.2
Refrigerant Piping (Flared)			
Liquid (High Pressure)		In.(mm)	1/4 (6.35)
Gas (Low Pressure)			3/8 (9.52)

ACCESSORIES:
Indoor Unit
- o Condensate Pump (BlueDiamond X07-711/721; 115/230V)
- o Condensate Pump (Sauermann SI30-115/230; 115/230V)
- o Anti-Allergy Enzyme Filter (MAC-408FT-E)
- o Platinum Catalyst Deodorizing Filter (MAC-306FT-E)
- o Drain Pan Level Sensor (DPLS-2)

Controls
- o Wireless Controller (MHK1)
- o Wired Remote Controller PAR-31MAA (Requires MAC-333IF-E)
- o Wireless Interface for kumo cloud™ (PAC-WHS01WF-E)
- o Thermostat Interface (PAC-US444CN-1)

MITSUBISHI ELECTRIC — COOLING & HEATING

1340 Satellite Boulevard. Suwanee, GA 30024
Toll Free: 800-433-4822 www.mylinac.com

© 2016 Mitsubishi Electric US, Inc

MSZ-GL09NA-U1

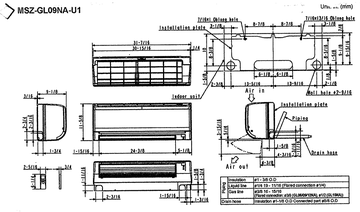

AO Smith | COMMERCIAL-GRADE RESIDENTIAL ELECTRIC WATER HEATERS

VOLTEX® HYBRID ELECTRIC HEAT PUMP WATER HEATER

The Voltex Hybrid Electric heat pump water heater from A. O. Smith is the most cost effective energy-efficient option available for consumers who want to save money on their utility bills. Voltex can reduce water heating costs up to 73% and provide payback in 2-3 years. With annual savings of $306 or more, there is no better way to go green than Voltex.



HOW DO THEY WORK?

Absorb ambient heat from the surrounding air to heat water using a compressor and "Environmentally-Friendly" R134a refrigerant
- Self-contained heat pump unit is integrated into the top of the tank
- Multiple operating modes to maximize efficiency and performance

QUALIFIES FOR MANY STATE AND LOCAL UTILITY REBATES - CHECK WWW.DSIREUSA.ORG

INCREASED ENERGY EFFICIENCY
- Improved efficiency designed in, to ensure available hot water at the lowest possible cost. Up to a 3.45 Uniform Energy Factor (UEF) Rating conserves energy and meets ENERGY STAR® qualifications

CHOICE OF OPERATING MODES
- Select from Efficiency, Hybrid, or Electric modes to match heating requirements to environmental conditions.
- Hybrid mode automatically adjusts between compressor and element, depending upon heat requirements.
- Vacation mode reduces operating costs and provides freeze protection during extended absence

BACKUP ELECTRIC ELEMENTS
- Long-lasting backup heating elements help heat water according to environmental conditions, demand, and the chosen operating mode

COREGARD™ ANODE ROD
- Our anode rods have a stainless steel core that extends the life of the anode rod allowing superior tank protection far longer than standard anode rods
- 66 and 80 gallon models have dual anodes for added protection.

DRY FIRE PROTECTION
- Control system checks to ensure the tank is full of water during start up to prevent dry firing the heating elements

ELECTRONIC USER INTERFACE
- User-friendly electronic interface allows easy control of temperature setting, operating mode, and communicates diagnostics
- Easy to read temperature display (see back) shows temperature in °F or °C
- Advanced diagnostics convey error messages for service purposes. The last four error messages are saved in the control system memory.

OTHER FEATURES
- Ideal for basements or garage installations; the compressor transfers heat to the water while dehumidifying and cooling the ambient air
- Washable air filter is easily removed for routine cleaning

OPTIONAL AIR DUCT ADAPTER KIT
- Permits installation in confined spaces

TEN YEAR LIMITED WARRANTY
- For complete information, consult written warranty or go to hotwater.com

Model Number	Nominal Capacity	Rated Storage Volume	UEF	First Hour Rating (Gallons)	Dimensions in Inches A	B	C	D	E	Approx. Shipping Weight (lbs)	Warranty Terms
HPTU-50N	50	46	3.45	66	63	22	40-5/8	3-3/8	40-1/2	196	10
HPTU-66N	66	67	3.45	79	61	27	38	4	38	289	10
HPTU-80N	80	82	3.45	86	69	27	46	4	46	307	10

Requires 30 amp breaker.
Tall TSP option not available.

ELECTRONIC USER INTERFACE
- User friendly, easy to read display.
- LEDs clearly indicate the current operating mode.
- Easily select operating mode:
  - Efficiency
  - Hybrid
  - Electric
  - Vacation
- Display communicates current status, mode and set point, and displays error messages when applicable.

EFFICIENCY MODE
- Utilizes the heat pump for all water heating.
- Automatically reverts to heating element if ambient air or water temperatures are outside optimal operating range for heat pump.

HYBRID MODE
- Utilizes the heat pump or heating element, depending on demand.

ELECTRIC MODE
- Standard electric water heater operation.

VACATION MODE
- One touch operation maintains tank temperature of 60°F (15.6°C) during vacation or extended absence to reduce operating costs and provide freeze protection.
- Programmable up to 99 days.

OTHER FEATURES:
- Sacrificial anode to protect against tank corrosion.
- Environmentally-friendly non-CFC foam insulation.
- Durable, enhanced-flow brass drain valve.
- CSA certified and ASME rated temperature & pressure relief valve.

OPERATING REQUIREMENTS:
- Requires provision for condensate draining; if a suitable drain is not available, a condensate pump is required.
- 208/240 VAC 60Hz single phase 30 amp power supply.

For Technical Information, call 800-527-1953. A. O. Smith Corporation reserves the right to make product changes or improvements without prior notice.
© April 2019 A. O. Smith Corporation. All Rights Reserved
www.hotwater.com | 800-527-1953 Toll-Free USA

ELECTRICAL SYMBOL LEGEND

- DUPLEX OUTLET, +12" ABOVE FIN. FLR., TAMPER RESISTANT, TYPICAL
- AFCI — DUPLEX OUTLET W/ ARC FAULT INTERRUPT CIRCUIT
- GFCI — DUPLEX OUTLET W/ GROUND FAULT INTERRUPT CIRCUIT
- AFCI GFCI — DUPLEX OUTLET W/ GROUND FAULT & ARC FAULT INTERRUPT CIRCUIT
- WP — DUPLEX OUTLET W/ WATERPROOF COVER
- DUPLEX OUTLET W/ ½ SWITCHED
- SPECIAL PURPOSE 220 V. OUTLET
- LIGHT SWITCH, +42" ABOVE FIN. FLR. TYPICAL
- LIGHT SWITCH, 3 WAY
- LIGHT SWITCH W/ DIMMER
- VS — LIGHT SWITCH W/ VACANCY SENSOR
- LIGHT, CEILING SURFACE MOUNTED
- LIGHT, WALL SURFACE MOUNTED
- LIGHT, PENDANT
- LIGHT, RECESSED DOWNLIGHT
- LIGHT, RECESSED WALL WASHER
- LIGHT, RECESSED ADJUSTABLE
- LIGHT, RECESSED STEP
- LIGHT, LINEAR STRIP
- FAN/ LIGHT COMBO
- EXHAUST FAN
- GARBAGE DISPOSER
- TELEPHONE OUTLET
- TV OUTLET
- DATA OUTLET
- SMOKE DETECTOR
- CO/D — COMBO SMOKE/ CO DETECTOR
- T — THERMOSTAT @ +60" ABOVE FIN. FLR.

LIGHTING FIXTURE SCHEDULE

Tag	Description
A1	Recessed 4" adjustable retractable LED downlight. Manufacturer: WAC Lighting, Precision Multiples, 3000K Housing, MT-4LD116N-S-30-BK Trim, MT-4LD116T-WT Remarks: Order with bar hangers
A2	Recessed 4" LED shower light with drop opal lens. Manufacturer: Halo, **To be determined** Lamp & Mfg: 3500K Remarks: Order with bar hangers
F1	Surface Mounted 1.5' X 4' LED Wrap Around Manufacturer: Lithonia, LBL4 LP835 Lamp & Mfg: 3500K, 41 watt light engine, 4564 Nom. Lumens
D1	Wall mounted LED exterior light fixture. Manufacturer: **To be determined by Owner** Remarks: Provide photo/motion sensor on exterior circuits, Verify location of sensor prior to installation Owner approval required prior to ordering.
D2	Pendant mounted LED decorative light fixture. Manufacturer: **To be determined by Owner**
D3	Wall mounted LED decorative bath strip light. Manufacturer: WAC Lighting, Brink, WS-77618-AL Remarks: Mount horizontally, **To be Owner Approved**
D4	Pendant mounted LED decorative light fixture. Manufacturer: **To be determined by Owner**
D5	Pendant mounted LED decorative exterior light fixture. Manufacturer: **To be determined by Owner**

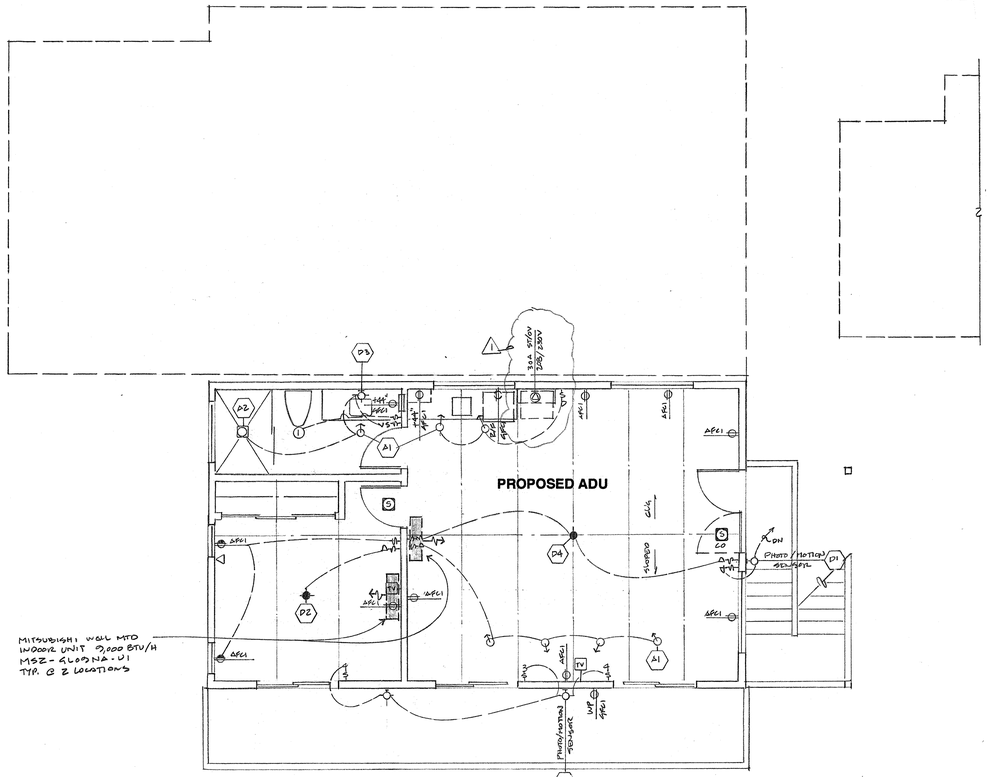

MUSIC / GUEST- ELECTRICAL / LIGHTING SCHEMATIC

SCALE: 1/4" = 1'- 0"

GARAGE / SHOP- ELECTRICAL / LIGHTING SCHEMATIC

SCALE: 1/4" = 1'- 0"

Provide a listed raceway to accommodate a dedicated 208/240-volt branch circuit for electric vehicle charging not less than 1" nominal inside diameter. The raceway shall originate at the main service or sub panel and shall terminate in a listed cabinet, box or enclosure in close proximity to the proposed location of the EV charger. Raceways are required to be continuous at enclosed, inaccessible or concealed areas and spaces. The raceway termination location shall be permanently and visibly marked as "EV CAPABLE". The service panel and/or subpanel shall provide capacity to install a 40-amp, minimum dedicated branch circuit and space(s) reserved to permit installation of a branch circuit overcurrent protective device. The service panel or subpanel shall identify the overcurrent protective device space(s) reserved for future EV charging as "EV CAPABLE". The EV Charging circuit must be rated for continuous duty at 125% of load. All Electrical Vehicle Supply Equipment (EVSE) shall be installed in accordance with the California Electrical Code.

Michael Helm, AIA Architect & Associates
200 Seventh Avenue, #110 Santa Cruz, California 95062 (831) 476-5386

REMODEL & ADDITIONS TO THE:
RENFREW RESIDENCE
14500 ARNERICH HILL ROAD - APN: 537-12-012
LOS GATOS, CALIFORNIA

GARAGE / SHOP ELECTRICAL SCHEMATIC
MUSIC / GUEST ELECTRICAL SCHEMATIC

11.14.22
1/4"=1'-0"
MSH
2108

19

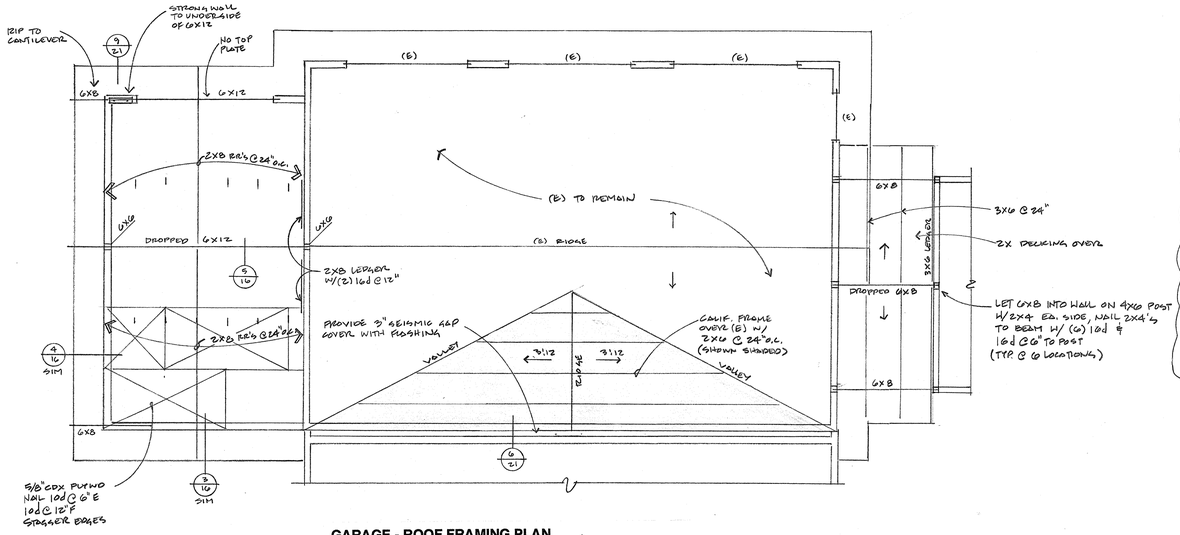

GARAGE - ROOF FRAMING PLAN
SCALE: 1/4" = 1'- 0"

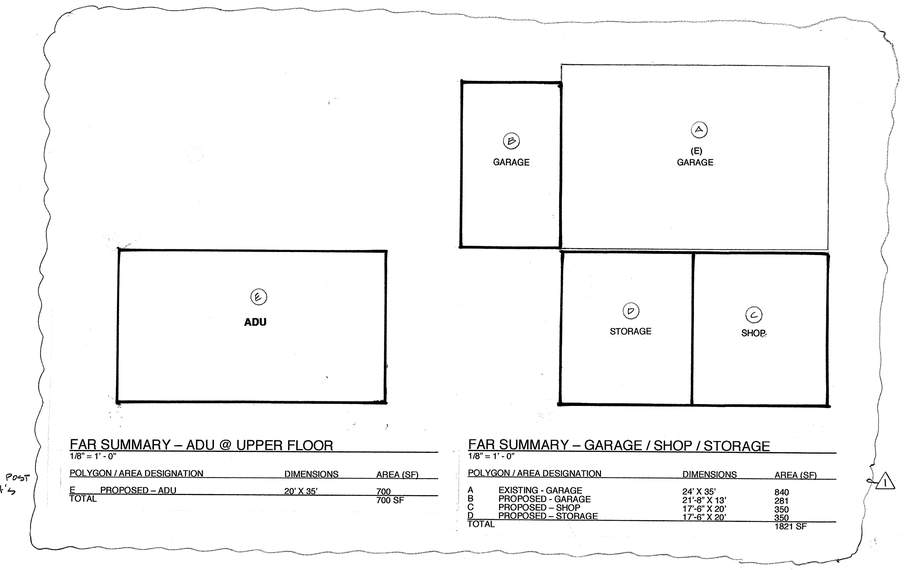

FAR SUMMARY – ADU @ UPPER FLOOR
1/8" = 1' - 0"

POLYGON / AREA DESIGNATION		DIMENSIONS	AREA (SF)
E	PROPOSED – ADU	20' X 35'	700
TOTAL			700 SF

FAR SUMMARY – GARAGE / SHOP / STORAGE
1/8" = 1' - 0"

POLYGON / AREA DESIGNATION		DIMENSIONS	AREA (SF)
A	EXISTING - GARAGE	24' X 35'	840
B	PROPOSED - GARAGE	21'-8" X 13'	281
C	PROPOSED – SHOP	17'-6" X 20'	350
D	PROPOSED – STORAGE	17'-6" X 20'	350
TOTAL			1821 SF

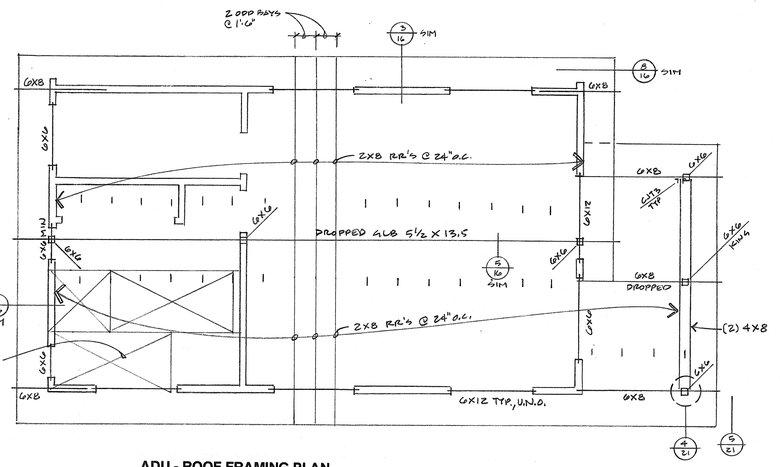

ADU - ROOF FRAMING PLAN
SCALE: 1/4" = 1'- 0"

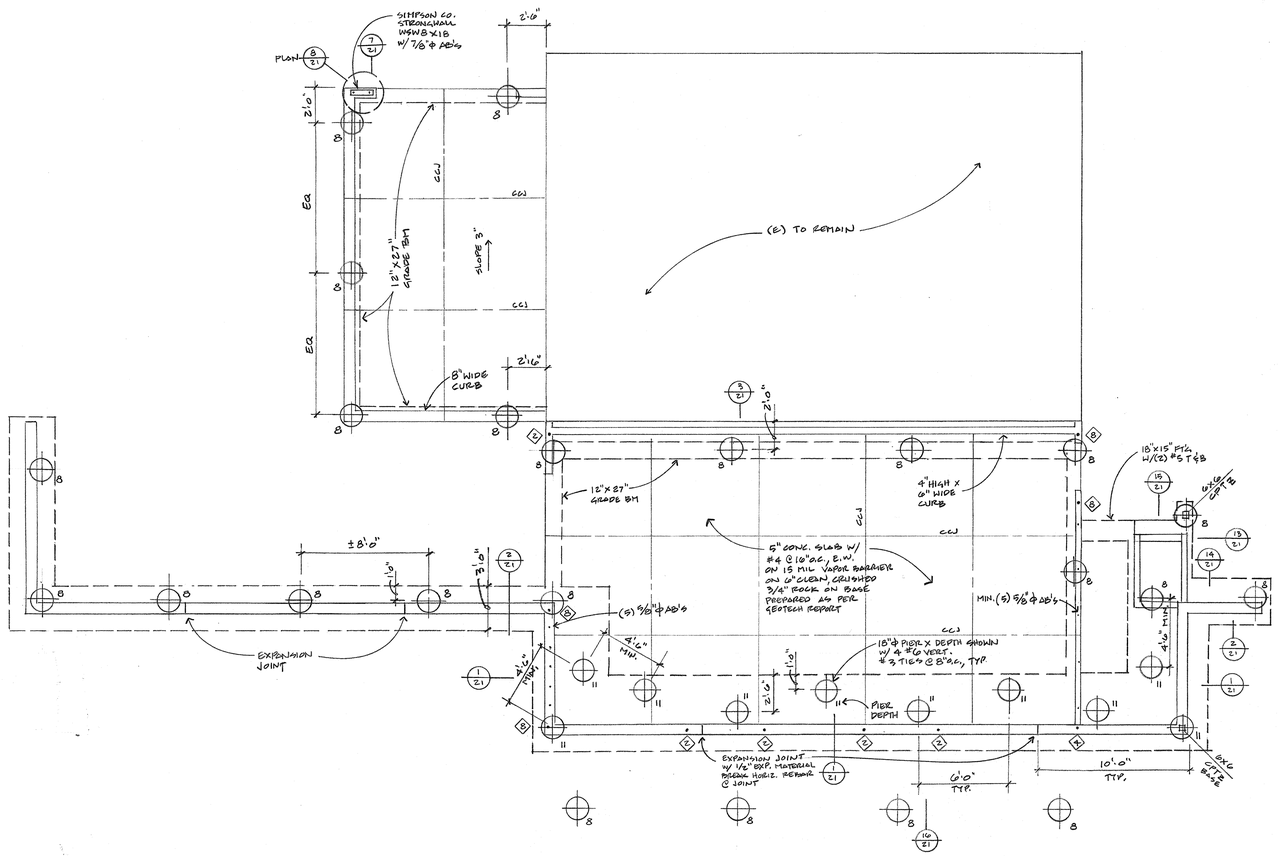

GARAGE / SHOP / STORAGE FOUNDATION PLAN
SCALE: 1/4" = 1'- 0"

ALL SOILS WORK AND FOUNDATION PLACEMENT SHALL COMPLY WITH THE RECOMMENDATIONS IN THE GEOTECHNICAL INVESTIGATION BY C2EARTH, PROJECT NO. 21137C-01R1, DATED JULY 29, 2022,

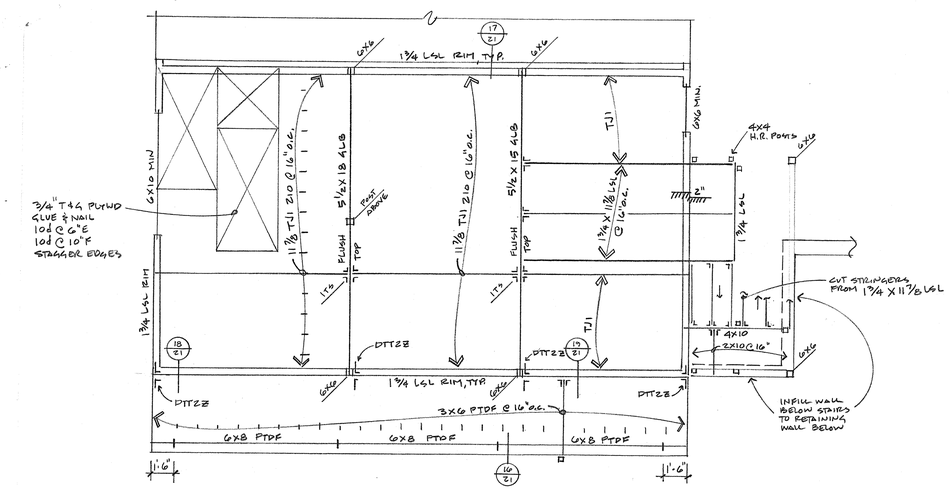

ADU - FLOOR FRAMING PLAN
SCALE: 1/4" = 1'- 0"

Michael Helm, AIA Architect & Associates
200 Seventh Avenue, #110 Santa Cruz, California 95062 (831) 476-5386

1	PLC 11-28-22	MSH

REMODEL & ADDITIONS TO THE:
RENFREW RESIDENCE
14500 ARNERICH HILL ROAD - APN 537-12-012
LOS GATOS, CALIFORNIA

GARAGE / SHOP - FOUNDATION
GARAGE / SHOP - ROOF FRAMING
ADU - FLOOR FRAMING
ADU - ROOF FRAMING

11.14.22
1/4"=1'-0"
MSH
2108

20

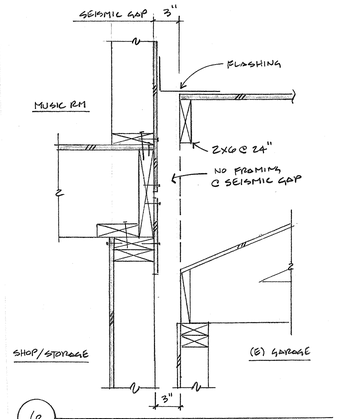

6 1½"=1'-0"

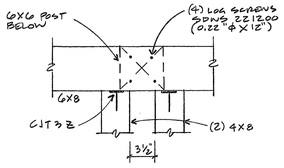

4 1½"=1'-0"

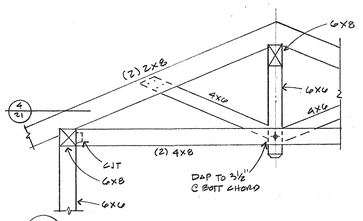

5 ½"=1'-0"

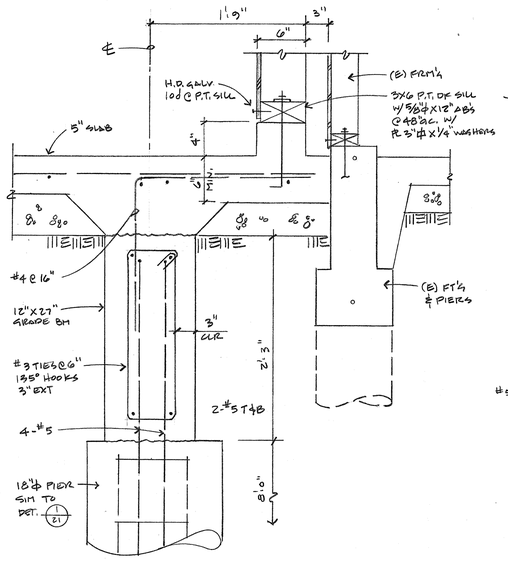

3 1½"=1'-0"

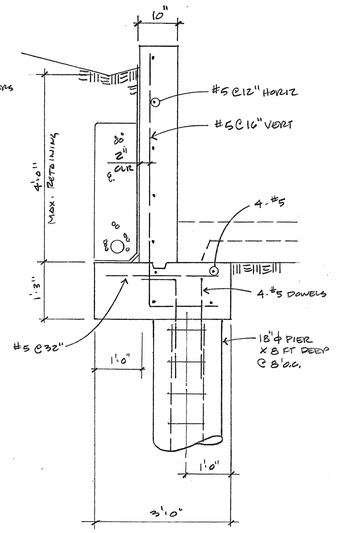

2 ¾"=1'-0"

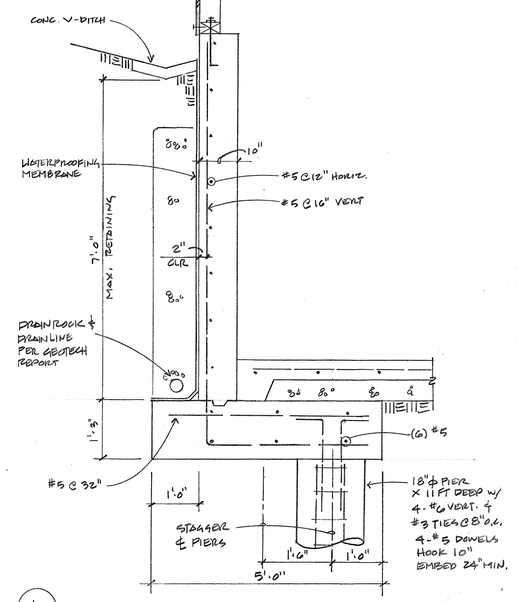

1 ¾"=1'-0"

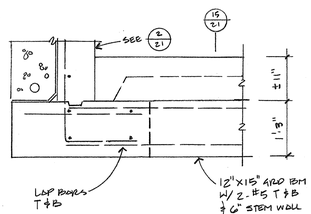

14 ¾"=1'-0"

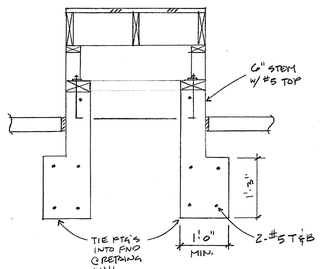

13 ¾"=1'-0"

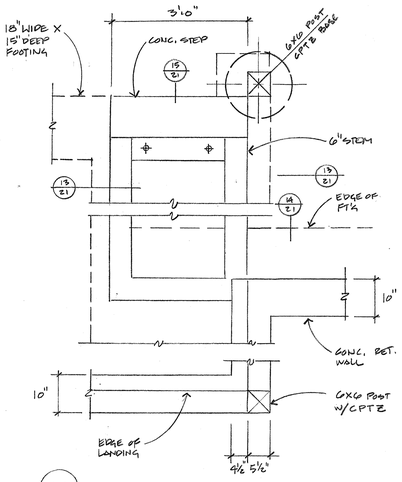

12 ¾"=1'-0"

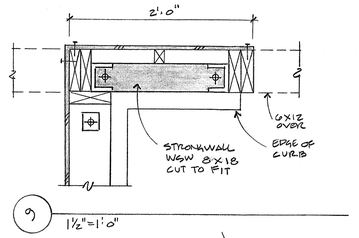

9 1½"=1'-0"

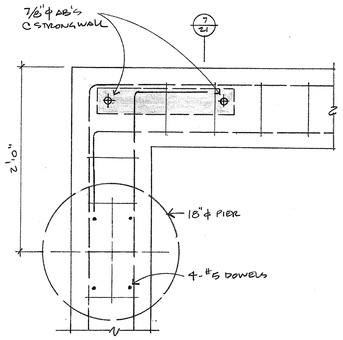

8 1½"=1'-0"

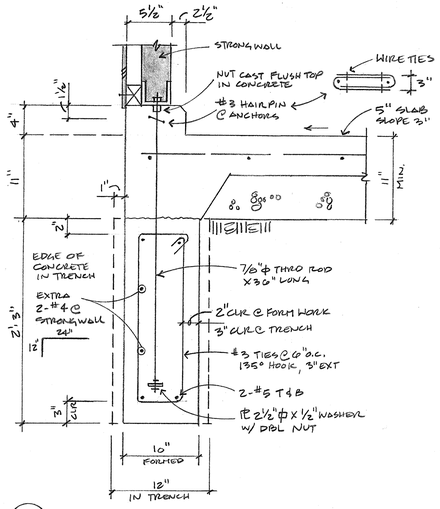

7 1½"=1'-0"

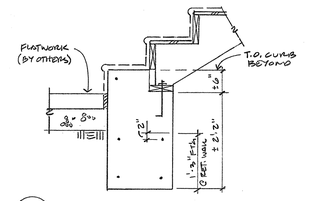

15 ¾"=1'-0"

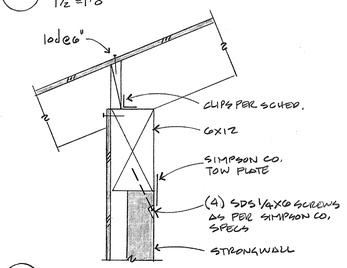

10 1½"=1'-0"

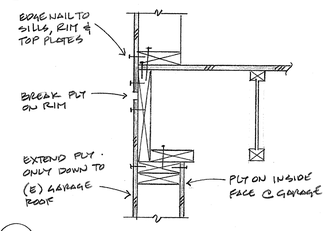

17 1½"=1'-0"

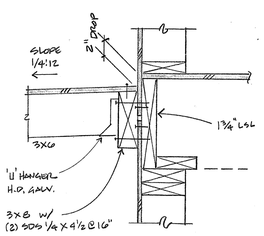

19 1½"=1'-0"

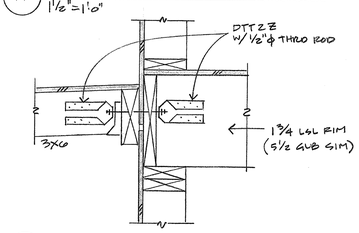

18 1½"=1'-0"

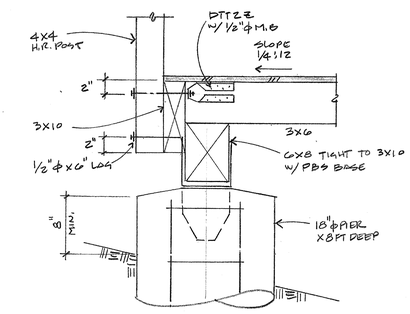

16 1½"=1'-0"

Michael Helm, AIA Architect & Associates
200 Seventh Avenue, #110 Santa Cruz, California 95062 (831) 476-5386

REMODEL & ADDITIONS TO THE:
RENFREW RESIDENCE
14500 ARMERICH HILL ROAD – APN 537-12-012
LOS GATOS, CALIFORNIA

CONSTRUCTION DETAILS

11.14.22
AS NOTED
MSH
2108

21

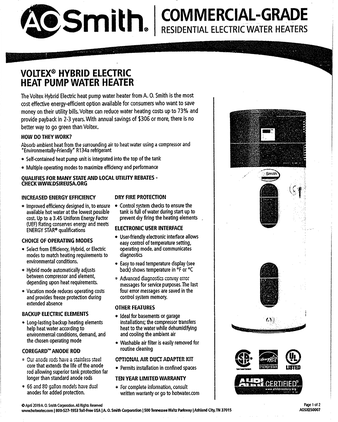

A.O. Smith | COMMERCIAL-GRADE RESIDENTIAL ELECTRIC WATER HEATERS

VOLTEX® HYBRID ELECTRIC HEAT PUMP WATER HEATER

The Voltex Hybrid Electric heat pump water heater from A. O. Smith is the most cost effective energy-efficient option available for consumers who want to save money on their utility bills. Voltex can reduce water heating costs up to 73% and provide payback in 2-3 years. With annual savings of $306 or more, there is no better way to go green than Voltex.

HOW DO THEY WORK?

Absorb ambient heat from the surrounding air to heat water using a compressor and "Environmentally-Friendly" R134a refrigerant

- Self-contained heat pump unit is integrated into the top of the tank
- Multiple operating modes to maximize efficiency and performance

QUALIFIES FOR MANY STATE AND LOCAL UTILITY REBATES - CHECK WWW.DSIREUSA.ORG

INCREASED ENERGY EFFICIENCY

- Improved efficiency designed in, to ensure available hot water at the lowest possible cost. Up to a 2.45 Uniform Energy Factor (UEF) Rating conserves energy and meets ENERGY STAR® qualifications

CHOICE OF OPERATING MODES

- Select from Efficiency, Hybrid, or Electric modes to match heating requirements to environmental conditions.
- Hybrid mode automatically adjusts between compressor and element, depending upon heat requirements.
- Vacation mode reduces operating costs and provides freeze protection during extended absence

BACKUP ELECTRIC ELEMENTS

- Long-lasting backup heating elements help heat water according to environmental conditions, demand, and the chosen operating mode

CORECARD™ ANODE ROD

- Our anode rods have a stainless steel core that extends the life of the anode rod allowing superior tank protection far longer than standard anode rods
- 66 and 80 gallon models have dual anodes for added protection.

DRY FIRE PROTECTION

- Control system checks to ensure the tank is full of water during start up to prevent dry firing the heating elements

ELECTRONIC USER INTERFACE

- User-friendly electronic interface allows easy control of temperature setting, operating mode, and communicates diagnostics
- Easy to read temperature display (see back) shows temperature in °F or °C
- Advanced diagnostics convey error messages for service purposes. The last four error messages are saved in the control system memory.

OTHER FEATURES

- Ideal for basements or garage installations; the compressor transfers heat to the water while dehumidifying and cooling the ambient air
- Washable air filter is easily removed for routine cleaning

OPTIONAL AIR DUCT ADAPTER KIT

- Permits installation in confined spaces

TEN YEAR LIMITED WARRANTY

- For complete information, consult written warranty or go to hotwater.com

© April 2014, A. O. Smith Corporation. All Rights Reserved
www.hotwater.com | 800-527-1953 Toll-Free USA | A. O. Smith Corporation | 500 Tennessee Waltz Parkway | Ashland City, TN 37015

A.O. Smith | COMMERCIAL-GRADE RESIDENTIAL ELECTRIC WATER HEATERS

Model Number	Nominal Capacity	Rated Storage Volume	UEF	First Hour Rating (FHR)	Dimensions in Inches					Approx. Shipping Weight (lbs.)	Warranty Term
					A	B	C	D	E		
EPTH-50N	50	46	2.45	68	63	22	49-5/8	3-3/4	49-1/2	196	10
EPTH-66N	66	62	2.45	79	81	27	38	4	38	269	10
EPTH-80N	80	82	2.45	86	89	27	46	4	46	307	10

Hybrid is the only option. Top T&P option not available.

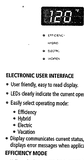

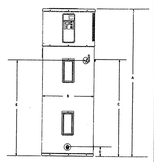

ELECTRONIC USER INTERFACE

- User friendly, easy to read display.
- LEDs clearly indicate the current operating mode.
- Easily select operating mode:
  - Efficiency
  - Hybrid
  - Electric
  - Vacation
- Display communicates current status, mode and set point, and displays error messages when applicable.
- Easy to read temperature display (see back) shows temperature in °F or °C
- Advanced diagnostics convey error messages for service purposes. The last four error messages are saved in the control system memory.

EFFICIENCY MODE

- Utilizes the heat pump for all water heating.
- Automatically reverts to heating element if ambient air or water temperatures are outside optimal operating range for heat pump.

HYBRID MODE

- Utilizes the heat pump or heating element, depending on demand.

ELECTRIC MODE

- Standard electric water heater operation.

VACATION MODE

- One touch operation maintains tank temperature of 60°F (15.6°C) during vacation or extended absence to reduce operating costs and provide freeze protection.
- Programmable up to 99 days.

OTHER FEATURES:

- Sacrificial anode to protect against tank corrosion.
- Environmentally-friendly non-CFC foam insulation.
- Durable, enhanced-flow brass drain valve.
- CSA certified and ASME rated temperature & pressure relief valve.

OPERATING REQUIREMENTS:

- Requires provision for condensate draining; if a suitable drain is not available, a condensate pump is required.
- 208/240 VAC 60Hz single phase 30 amp power supply.

For Technical Information, call 800-527-1953, A. O. Smith Corporation reserves the right to make product changes as improvements without prior notice.

© April 2014, A. O. Smith Corporation. All Rights Reserved
www.hotwater.com | 800-527-1953 Toll-Free USA

ELECTRICAL SYMBOL LEGEND

- DUPLEX OUTLET, +12" ABOVE FIN. FLR.,TAMPER RESISTANT, TYPICAL
- DUPLEX OUTLET W/ ARC FAULT INTERRUPT CIRCUIT
- DUPLEX OUTLET W/ GROUND FAULT INTERRUPT CIRCUIT
- DUPLEX OUTLET W/ GROUND FAULT & ARC FAULT INTERRUPT CIRCUIT
- DUPLEX OUTLET W/ WATERPROOF COVER
- DUPLEX OUTLET W/ ½ SWITCHED
- SPECIAL PURPOSE 220 V. OUTLET
- LIGHT SWITCH, +42" ABOVE FIN. FLR. TYPICAL
- LIGHT SWITCH, 3 WAY
- LIGHT SWITCH W/ DIMMER
- LIGHT SWITCH W/ VACANCY SENSOR
- LIGHT, CEILING SURFACE MOUNTED
- LIGHT, WALL SURFACE MOUNTED
- LIGHT, PENDANT
- LIGHT, RECESSED DOWNLIGHT
- LIGHT, RECESSED WALL WASHER
- LIGHT, RECESSED ADJUSTABLE
- LIGHT, RECESSED STEP
- LIGHT, LINEAR STRIP
- FAN/ LIGHT COMBO
- EXHAUST FAN
- GARBAGE DISPOSER
- TELEPHONE OUTLET
- TV OUTLET
- DATA OUTLET
- SMOKE DETECTOR
- COMBO SMOKE/ CO DETECTOR
- THERMOSTAT @ +60" ABOVE FIN. FLR.

LIGHTING FIXTURE SCHEDULE – POOL CABANA

Tag	Description
A1	Surface mounted Monopoint LED light fixture with 2.7" round canopy with piston head. Manufacturer: Pure Edge Lighting, 3000K
A2	Recessed 4" LED shower light with drop opal lens. Manufacturer: Halo, **To be determined** Lamp & Mfg: 3500K Remarks: Order with bar hangers
A3	Surface mounted under cabinet task LED light. Manufacturer: WAC Lighting, Line, 3000K Lamp & Mfg: 30" LN-LED30-30AL 24" LN-LED24-30-AL 12.25" LN-LED12-30-AL
F1	Surface Mounted 1.5' X 4' LED Wrap Around Manufacturer: Lithonia, LBL4 LP835 Lamp & Mfg: 3500K, 41 watt light engine, 4564 Nom. Lumens
D1	Pendant mounted LED decorative light fixture. Manufacturer: **To be determined by Owner** Remarks: Owner approval required prior to ordering.
D2	Ceiling mounted LED decorative light fixture.
D3	Manufacturer: **To be determined by Owner** Remarks: Owner approval required prior to ordering. Wall mounted LED decorative bath strip light. Manufacturer: WAC Lighting, Brink, WS-77618-AL Remarks: Mount vertically, **To be Owner Approved**
D4	Pendant mounted ceiling fan. Manufacturer: **To be determined by Owner** Remarks: Owner approval required prior to ordering.

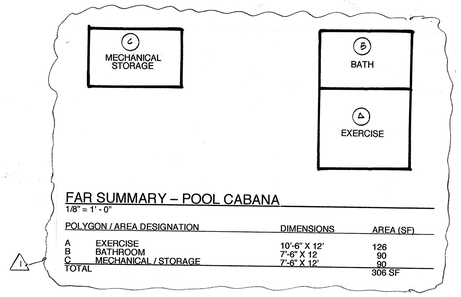

FAR SUMMARY – POOL CABANA

1/8" = 1'-0"

POLYGON / AREA DESIGNATION		DIMENSIONS	AREA (SF)
A	EXERCISE	10'-6" X 12'	126
B	BATHROOM	7'-6" X 12	90
C	MECHANICAL / STORAGE	7'-6" X 12'	90
TOTAL			306 SF

Color/Materials Board

Roof Peterson Alum. Corp., 18" wide, 24ga. PAC-CLAD Standing Seam Metal Roofing
Manufacture & Material / Product Name, Number: Dark Bronze, Reflectivity 0.29

Door & Window Frames, Railings
ALCO-WOOD CLAD-WOOD
Manufacture / Number
Color Name, LRV: Chestnut Bronze LRV 6%

Trim James Hardie - Fiber Cement - Painted
Manufacture / Number: Sherwin Williams
Color Name, LRV: Olive Sw1146, LRV 30%

Exterior Walls James Hardie - Fiber Cement
Horizontal Lap or Shingle Siding - Painted
Manufacture / Number: Sherwin Williams
Color Name, LRV: Cardamom SW2787, LRV 7%

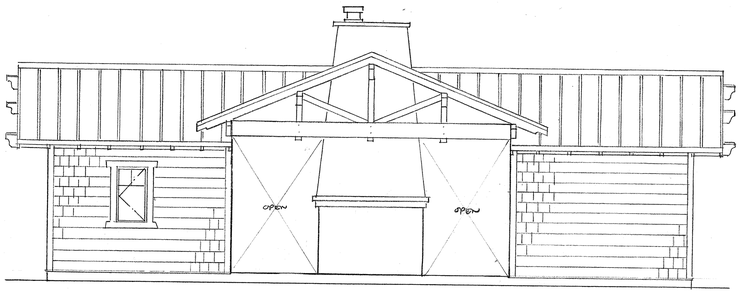

EAST ELEVATION

SCALE: 1/4" = 1'- 0"

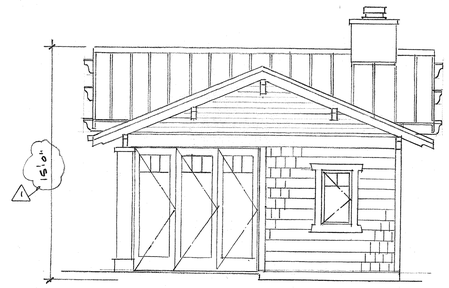

SOUTH ELEVATION

SCALE: 1/4" = 1'- 0"

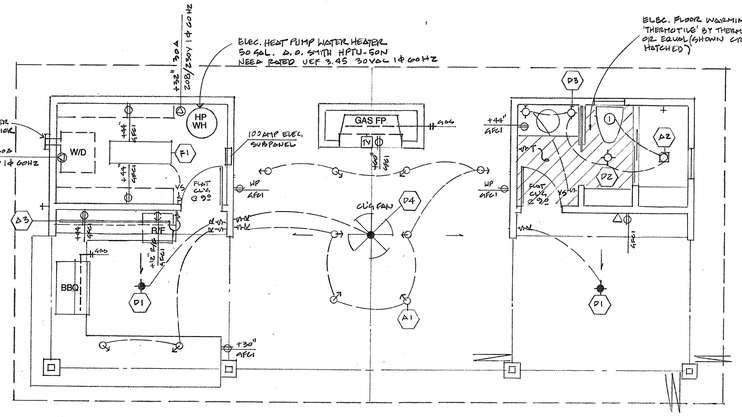

ELECTRICAL SCHEMATIC

SCALE: 1/4" = 1'- 0"

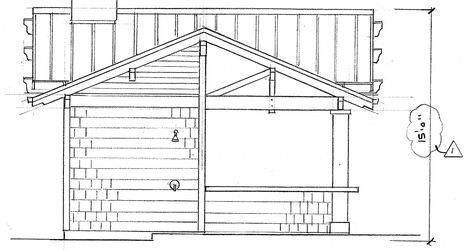

NORTH ELEVATION

SCALE: 1/4" = 1'- 0"

STANDING SEAM METAL ROOFING

Peterson Aluminum Corp., PAC-CLAD 18" wide snap-clad 24 gauge Standing Seam Metal Roofing, UL-580 Class 90 wind uplift, UL-Class A fire rated, installation per mfg. Specs over Dbl layer 30 lb. Felt over 5/8" CDX plywood sheathing nailed w/ 10d @ 6" o.c. edges and 12" o.c. field, U.N.O., to to 2X Rafters @ 24" o.c. or 2X Pre-fabricated trusses @ 24" o.c. with R-30 closed cell polyurethane spray foam insulation. Underlayment shall comply with ASTM D226 Type I; ASTM Type I, II, III or IV; ASTM D6757, and shall bear a label indicating compliance to the standard designation. **Eave construction shall meet SFM 12-7A-3 requirements.**

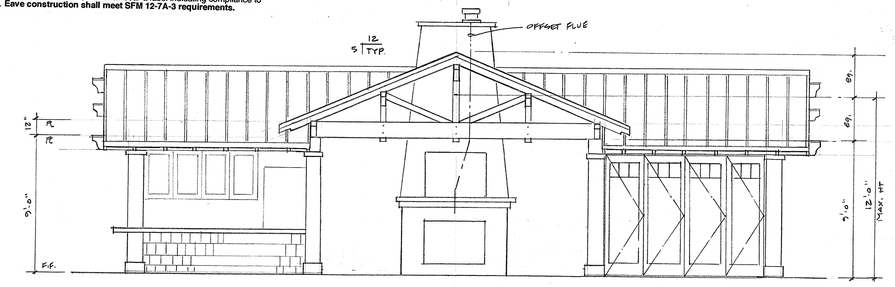

WEST ELEVATION

SCALE: 1/4" = 1'- 0"

PLUMBING NOTES

1. The Plumbing System shall be installed in accordance with the latest edition of the Plumbing Code. Provide all equipment as shown on drawings and as needed for a complete and working system. Use Manufacturer as scheduled or Equal approved by the Architect. Install all equipment in accordance with the Manufacturer's instructions and within all applicable codes and standards.
2. Provide clean outs for every aggregate change in direction exceeding 135 degrees. If the water supply pressure exceeds 80 PSI, install an approved pressure regulator in an accessible location to reduce the service pressure to 60 PSI or less. Hose bibbs shall be protected by a backflow prevention device. Pressure relief valve shall extend to the outside of the building and terminate not more than two feet nor less than six inches above the ground and pointed downward.
3. Waste lines shall be ABS. Water supply piping shall be Type L copper below grade and Type L copper or PEX tubing within the building. Gas piping shall be Schedule 40 black iron.
4. For the purpose of clarity and legibility, these drawings are essentially diagrammatic to the extent that many offsets, bends, special fittings and exact locations are not indicated. Contractor shall verify all conditions at the site before proceeding with installation. It is the responsibility of the Contractor to install the system such that the integrity of the building is maintained.
5. Provide pressure balance, thermostatic or combination pressure balance/thermostatic mixing valves at showers and tub-showers that provide scald and thermal shock protection (120 F max.). Verify at rough plumbing inspection per CPC sec. 408.3.
6. All building water supply systems in which quick acting valves (washing machines, dishwashers, etc., are installed, shall be provided with devices to absorb high pressures resulting from the quick closing of these valves.
7. Water lines shall be insulated per CA Energy Code as follows;
   Install a minimum 1.5 inch thick insulation on all hot water pipes, all piping with a nominal diameter of 3/4 inch or larger, piping associated with recirculation systems regardless of pipe diameter, and cold water pipes for the first 5 feet from a storage tank, piping buried below grade, all hot water pipes from heating source to kitchen fixtures. Hot water pipes buried below grade must be installed in a waterproof and non-crushable casing or sleeve. Insulation outside conditioned space shall be protected per CEnC 150.0(j)2., Table 120.3-A, CPC 609.11
8. Provide "DSA Certified" earthquake actuated shut-off valve at gas meter or regulator.
9. No domestic dishwashing machine shall be directly connected to a drainage system or food waste disposer without the use of an approved dishwasher air gap fitting on the discharge side of the dishwashing machine. Listed air gaps shall be installed with the flood-level (FL) marking at or above the flood level of the sink or drainboard, whichever is higher. CPC 807.3
10. Control valves and shower heads shall be located on the sidewall of shower compartment or otherwise arranged so that the shower head does not discharge directly at the entrance to the compartment and the bather can adjust the valves prior to stepping into the shower spray per CPC 408.9

PLUMBING FIXTURE MAXIMUM FLOW RATES

TOILET	1.28 GPF
LAVATORY FAUCETS	1.2 GPM @ 60 PSI
TUB / SHOWER VALVES	1.8 GPF @ 80 PSI
KITCHEN FAUCETS	1.8 GPM @ 60 PSI

PLUMBING FIXTURE CONNECTION SCHEDULE

SYMBOL	TYPE	WASTE	VENT	HOT	COLD
LV	LAVATORY	1-1/2"	1-1/2"	1/2"	1/2"
WC	TOILET	3"	2"	-	1/2"
T/SH	TUB / SHOWER	2"	1-1/2"	1/2"	1/2"
KS	KITCHEN SINK	2"	1-1/2"	1/2"	1/2"
WS	WASHER	1-1/2"	1-1/2"	1/2"	1/2"
HB	HOSE BIBB				3/4"

DOOR SCHEDULE – POOL CABANA

SYM	SIZE	TYPE	QUAN.	REMARKS
1	2868	Exterior S.C., 3-Panel	1	Stain Grade, by Sun Mountain, Inc.
2	2868	Interior S.C., 3-Panel	1	Stain Grade, by Sun Mountain, Inc.
3	2868	Interior S.C., 3-Panel Pocket Door	1	Stain Grade, by Sun Mountain, Inc.
4	8070	Exterior, 3W Bi-fold	2	Clad/Wood Sash, Low-E dbl. insulated **Tempered glass**
5	10870	Exterior, 4W Bi-fold	1	Clad/Wood Sash, Low-E dbl. insulated **Tempered glass**
6	5470	Bi-Pass Sliding Shower Doors	1	3/8" Clear 'Frameless' Tempered glass, Provide shop drawings for approval

WINDOW SCHEDULE– POOL CABANA

SYM	SIZE	TYPE	QUAN.	REMARKS
A	2036	Casement	2	Clad/Wood Sash, Low-E dbl. insulated **Tempered glass**

Jeld-Wen – Clad Wood sash windows & doors overall standards comply with ANSI/ AAMA/ WDMA/CSA101/I.S.2 / A440-05 / A440-08 / A40-11

a. All units are Gold Label tested & certified with label attached to frame per AAMA standards per CRC, Section 609.3, installation per AAMA 2400
b. All insulated glass units conform to ASTM E2188 / E2190, NFRC certified and labeled.
c. Safety Glazing testing and labeling per CRC, Sections 308.1 & 308.4
d. Energy testing and certification per CEnC, Section 110.6
e. Verify rough openings and window / door sizes prior to ordering.

Note: The NFRC label which states the required U-value and SGHC for all fenestration products shall not be removed prior to inspection or the removal by a building inspector and shall reflect the values listed in the energy report.

FINISH SCHEDULE NOTES

1. VERIFY ALL FINISHES WITH OWNER
2. ALL CLOSET FLOORING AND BASEBOARDS SHALL MATCH THE ADJACENT ROOM
3. PROVIDE A SMOOTH, HARD, NON-ABSORBENT SURFACE OVER MOISTURE RESISTANT UNDERLAYMENT TO A HEIGHT OF 72" ABOVE THE DRAIN OUTLET IN ALL SHOWER AND TUB LOCATIONS.
4. UNDERLYING BASE FOR ALL TILE SHALL BE CEMENT, FIBER-CEMENT OR GLASS MAT GYPSUM BACKER BOARDS IN COMPLIANCE WITH ASTM C1178, C1288 OR C1325 AND INSTALLED IN ACCORDANCE WITH THE MANUFACTURER RECOMMENDATIONS. IT SHALL BE USED AS A BASE FOR WALL TILE IN TUB AND SHOWER AREAS AND AS CEILING PANELS IN SHOWER AREAS.

VENTILATION NOTES

1. All **bathroom fans** are to be used for **Local Ventilation Exhaust**. Minimum 50 CFM fan tested at a static pressure of .25 wc and rated @ 3 sones or less required to be installed. Fan must be attached to a minimum 4" duct and no longer than 70' of **flex** duct. Subtract 15' of allowed length for each elbow.

CONSTRUCTION SCHEDULE – POOL CABANA

FOUNDATIONS	12" wide X 27" deep concrete grade beam with 2 - #5 bars T & B w/ #3 ties @ 6' o.c. on 18" diameter drilled piers X 8' deep (min.) CONCRETE SLABS: 5" thick concrete slab w/ #4 bars @ 16" o.c. each way, on 15 mil vapor barrier on 6" crushed rock. CONCRETE MIX: Substitute Portland Cement with recycled flyash, 35% by volume, typical. Keep receipts for Inspector verification. TREATED LUMBER: Substitute ACQ pressure treatment for CCA products, typical. FORM BOARDS: Clean and re-use for scaffolding, forms, blocking, etc… FORM RELEASE AGENT: Use Non-toxic soy based 0-VOC form release agent by BIO-GUARD CO. or Architect approved equal.
FLOORS	Flagstone on mortar bed on 5" thick concrete slab w/ #4 bars @ 16" o.c. each way, on 15 mil vapor barrier on 6" crushed rock.
WALLS	5/16" James Hardie fiber cement horizontal siding over 'TYVEK' house wrap on 5/8" Type 'X' exterior gypsum sheathing on 7/16" CDX plywood or OSB sheathing, nailed w/10d @ 6" o.c. edges and 12" o.c. field, U.N.O., on 2 X 6 studs @ 16" o.c. with R-23 high density batt insulation, 1/2" gypsum wallboard interior finish, typical. Use low/No VOC exterior/interior paints. **Wall construction shall meet SFM12-7A-1 requirements.**
ROOF	Class B (min.) standing seam metal roofing, install per mfg. specs over Dbl. layer 30 lb. felt over 1/2" CDX plywood sheathing, w/ #6 X 1-1/2" screws @ 6" o.c. edges & 12" o.c. field over 2X decking on 3X6 Rafters @ 24" o.c.. Underlayment shall comply with ASTM D226 Type I; ASTM Type I, II, III or IV; ASTM D6757, and shall bear a label indicating compliance to the standard designation.
GUTTERS & DOWNSPOUTS	16 oz. copper beveled gutters w/ 2" diameter round downspouts deposit into existing landscaped areas. **Gutters shall be provided with leaf/debris protection.**
ROOF / WALL FLASHINGS	16 oz. copper where shown or required. Pan flash all ext. door sills with 16 oz. copper solder all joints, typical
WINDOWS & EXT. GLASS DRS.	Jeld-Wen – Alum. Clad/Wood sash with Dbl. insulated **Tempered** Low-E glass, provide screens at all operable windows. **Exterior door assemblies shall conform to SFM 12-7A-1 requirements.**
INSULATION	EXT. WALLS R-23 high density fiberglass batts
ROOF JACKS	Provide neoprene gaskets and 16 oz. copper roof jack / rain cap, typical. All exhaust vents shall be located a min. of 4' from or 1' above all roof or wall openings per CMC. All plumbing vents shall be located a min. of 10' from or 3' above all roof or wall openings per CPC.
WALL PENETRATIONS	Use weatherproofing wall jacks by QUICKFLASH or approved equal for plumbing, electrical and mechanical penetrations.
PAINTS, STAINS, ADHESIVES & SEALERS	Use Low / No VOC, water based products and solvent-free adhesives, typical.
PLUMBING	Install Low-flow toilets. Install Low-flow shower heads with chlorine filters.
CABINETS & TRIM	Use formaldehyde-free particle board and MDF by MEDITE or approved equal for all cabinets and trim applications

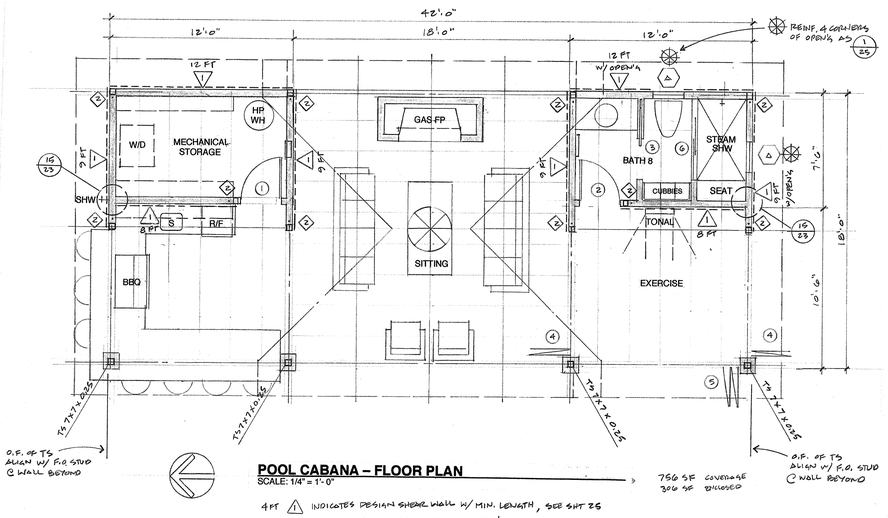

POOL CABANA – FLOOR PLAN

SCALE: 1/4" = 1'- 0"

750 SF COVERAGE
306 SF ENCLOSED

4PT ⚠1 INDICATES DESIGN SHEAR WALL W/ MIN. LENGTH, SEE SHT 25
⚠2 INDICATES HOLDOWN BRACKET, ANCHOR 4 POINT, SEE SHT 25

1	11.22.22
2	MSH

Michael Helm, AIA Architect & Associates
200 Seventh Avenue, #110 Santa Cruz, California 95062 (831) 476-5386

REMODEL & ADDITIONS TO THE:
RENFREW RESIDENCE
14500 ARNERICH HILL ROAD – APN 537-12-012
LOS GATOS, CALIFORNIA

CABANA - FLOOR PLAN EXTERIOR ELEVATIONS

11.14.22
1/4"=1'-0"
MSH
2108

22

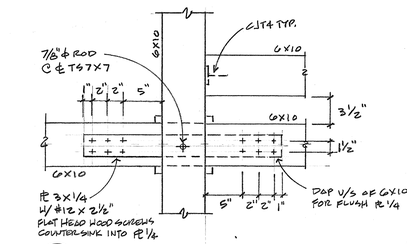

11 1½"=1'-0"

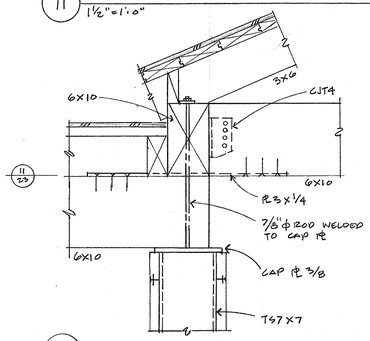

12 1½"=1'-0"

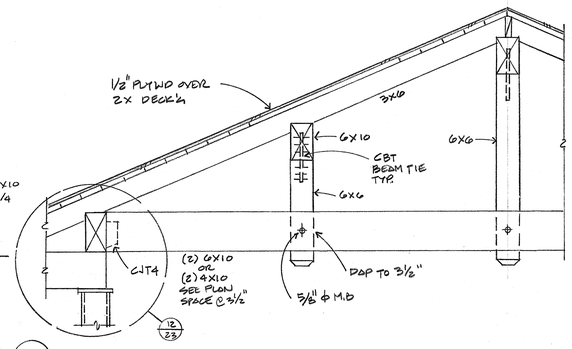

7 3/4"=1'-0"

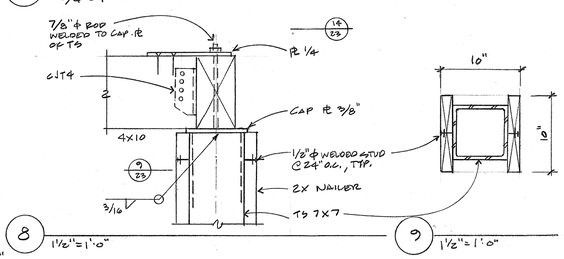

8 1½"=1'-0" 9 1½"=1'-0"

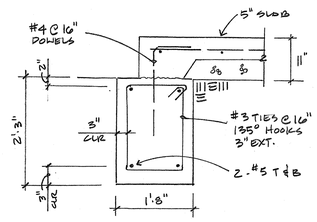

4 3/4"=1'-0"

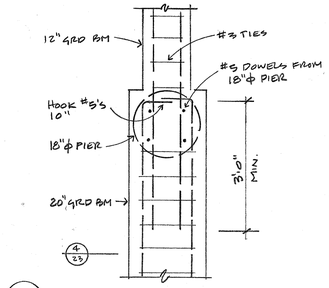

5 3/4"=1'-0"

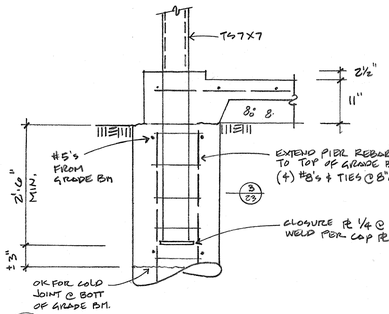

2 3/4"=1'-0"

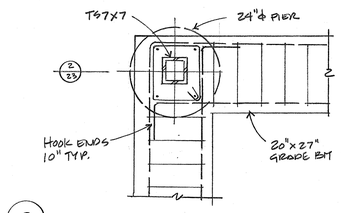

3 3/4"=1'-0"

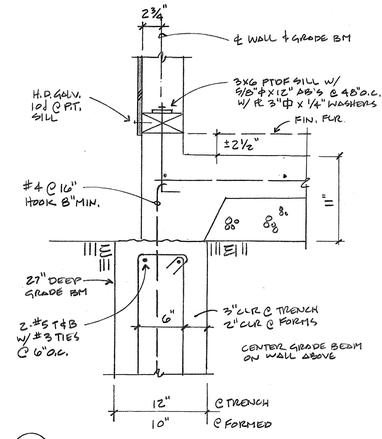

1 1½"=1'-0"

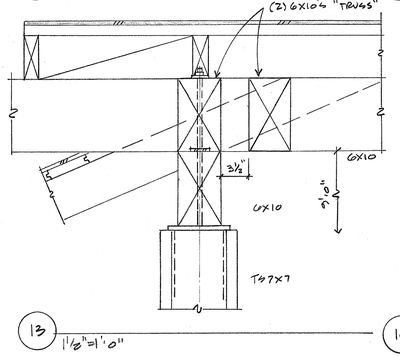

13 1½"=1'-0"

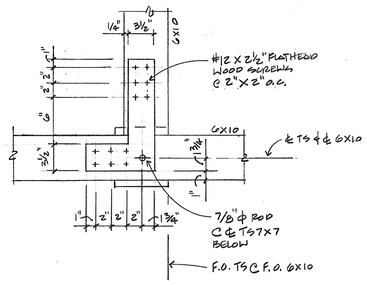

10 1½"=1'-0"

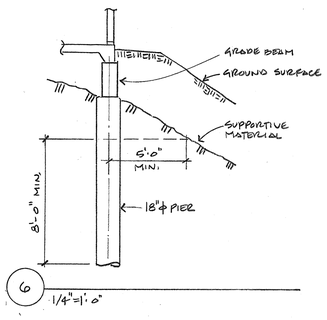

6 1/4"=1'-0"

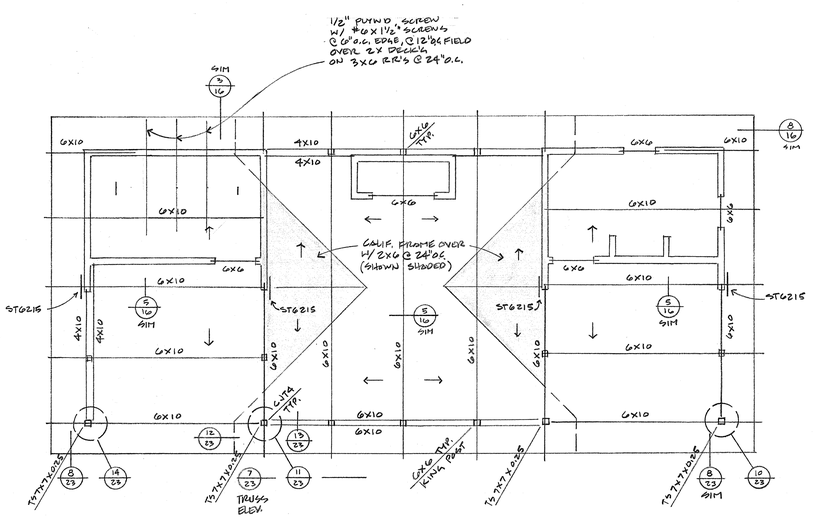

POOL CABANA - ROOF FRAMING PLAN
SCALE: 1/4" = 1'-0"

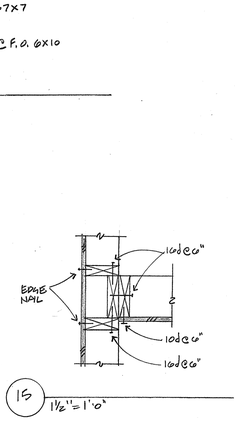

15 1½"=1'-0"

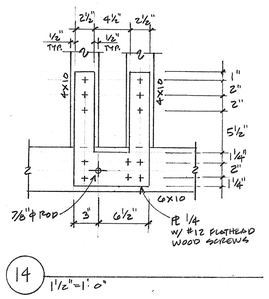

14 1½"=1'-0"

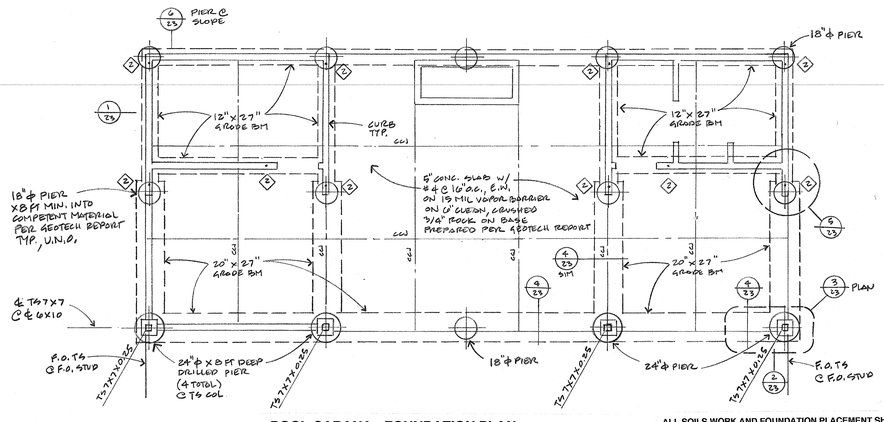

POOL CABANA - FOUNDATION PLAN
SCALE: 1/4" = 1'-0"

ALL SOILS WORK AND FOUNDATION PLACEMENT SHALL COMPLY WITH THE RECOMMENDATIONS IN THE GEOTECHNICAL INVESTIGATION BY C2EARTH, PROJECT NO. 21137C-01R1, DATED JULY 29, 2022,

Michael Helm, AIA Architect & Associates
200 Seventh Avenue, #110 Santa Cruz, California 95062 (831) 476-5386

REMODEL & ADDITIONS TO THE
RENFREW RESIDENCE
14500 ARNERICH HILL ROAD – APN 537-12-012
LOS GATOS, CALIFORNIA

Pool Cabana - Foundations Plan
Pool Cabana - Roof Framing

11.14.22
1/4"=1'-0"
MSH
2108

23

QUIK-SHIELD® 118

Ultra-Efficient Closed-Cell Spray Foam

QUIK-SHIELD® 118 is the first Ultra-Efficient closed-cell, spray foam on the market today. It is specially formulated to increase jobsite efficiency, decrease labor and overhead costs, reduce jobsite risk, and deliver the lowest cost installed.

FEATURE-RICH:
- Ultra lift—up to 8" applications
- Robust Formulation
- ✓ Long-Range Application

EXCEPTIONAL CONTRACTOR VALUE:
- Up to 50% increase in jobsite efficiency
- Keeps making good foam, even under adverse conditions
- Up to 20' application range

APPROVALS/ COMPLIANCE:
- CCRR-1093
- IBC, IRC, IECC: 2009, 2012, 2015
- AC377 compliant
- Appendix X compliant - no ignition barrier needed
- Type-IV construction
- Class 1= ASTM E-84
- E-84, NFPA 285, E-119

***TYPICAL PHYSICAL PROPERTIES*:**	***PROCEDURE***	***VALUES***
Core Density (minimum, lb/ft³)	D-1622	1.8 - 2.0
Water Vapor Permeance at 1.2" (perms/in)	E-96	0.93
Water Absorption (%)	D-2842	1
Dimensional Stability (%)	D-2126	<3
Tensile Strength (psi)	D-1623	>32
Compressive Strength (psi)	D-1621	25
Air Leakage (L/s.m²)	E-283	<0.02
Air Permeance at 1" (L/s.m²)	E2178-13	<0.02
THERMAL BARRIER		
DC 315 (wet mils)	NFPA 286	20
RELATIVE INSULATION VALUES (aged):		
R-value at 1"		6.3
R-value per inch at >3.5"		6.5

INDUSTRY LEADING TEMPERATURES:
- Continuous use temperature can be as high as 250°F (121° C) and it is dimensionally stable down to -60°F (-51° C).
- Solid performance in all climates, including extreme heat and cold, and high humidity.

PACKAGING:
275 Gallon Tote
55 Gallon Drum

HANDLING PROPERTIES at 77°F (25°C):	***A SIDE (ISO)***	***B SIDE (RESIN)***
Viscosity, cps	250±50	550±100
Specific Gravity	1.23	1.22

FINISHED PRODUCT COLOR:
White to off-white (UV exposure will cause discoloration, discoloration by itself is not a sign of product damage)

RECOMMENDED PROCESSING INFORMATION (ADDITIONAL DETAILS ON BACK):

Dispensing Ratio	1:1
Hose Heaters	115-140°F (46-60° C)
Primary Heaters (A&B)	115-140°F (46-60° C)
Dynamic Pressure (A&B)	1000 psi minimum
Static Pressure (A&B)	1100-1600 psi
Ambient Temperature	25 - 130°F (-4 - 54° C)
Drum Conditioning Temperature	55 - 80°F (12 - 27° C)

† Temperature outside the range are possible, contact SWD for more information

LEED INFORMATION:
- Quik-Shield® 118 has a minimum of 9% total renewable/recycle content
- 2.3% pre-consumer recycled
- 5.2% post-consumer recycled
- 1.6% rapidly renewable
- IEQ Credit- Low Emitting Materials

MIXING (ADDITIONAL DETAILS ON BACK):
- Do not mix
- Do not recirculate

RECOMMENDED STORAGE AND SHELF LIFE (ADDITIONAL DETAILS ON BACK):
- Storage temperatures 40-100°F** (4-38° C). See back for preconditioning of material.
- Shelf life from date of manufacture (unopened containers):
  - *A-Side (iso): 12 months*
  - *B-Side (resin): 6 months*
- Keep container tightly sealed.
- Store out of direct sunlight, in a cool dry place, avoid freezing.

*Properties achieved in a lab environment at 77°F. Field conditions may cause variation in properties.

** Caution: if the drum temperature is 80°F (26.6°C) or higher, use caution when opening the drum! The contents will be under pressure.

PREPARATION OF SUBSTRATES

Providing the proper substrate is the responsibility of the owner, the owner's appointed representative, the contractor, and/or inspector. The following are manufacturer's recommendations. However, other preparation techniques may be required given unique/specialized application circumstances. Contact SWD for technical questions.

It is recommended to remove dust, dirt, oil, paint, and alternative polymers from all surfaces prior to applying SWD products.

See SWD specifications or SPFA guidelines for further details on substrate prep.

WOOD
- Ensure wood is relatively dry and protect surfaces from contamination.
- Water or oil present may cause poor adhesion or excessive foaming.
- Fill large voids with appropriate backer rods or appropriate fillers.
- If additional information is required, contact an SWD representative for more details.

STEEL & OTHER METALS
- It is the responsibility of the contractor/end user to determine proper adhesion and suitability through field testing. Blasting and/or priming is not always required. If additional information is required, contact an SWD representative for more details.

CONCRETE
- If applying foam to concrete, the concrete surface should be structurally sound, clean, and dry/cured (typically 28 days).
- Fill large voids with appropriate backer rods or appropriate fillers.
- Blasting and/or priming is not always required. It is the responsibility of the contractor/end user to determine proper adhesion and suitability. If additional information is required, contact an SWD representative for more details.

PREVIOUSLY APPLIED FOAM or OTHER POLYMERS
- As practical, remove previously applied foam and other polymer products. Application of product over existing materials should be performed only after adhesion/compatibility is verified by the contractor and accepted by the building owner or owner's appointed representative.

WIRING & PLUMBING:
- Quik-Shield® 118 is fully compatible with CPVC piping systems (Paschal Engineering Study for the SPFA)
- Quik-Shield® 118 is compatible with typical electrical wiring coverings.

PROCESSING

1. It is recommended to precondition material to 55-80°F prior to application. Material may thicken at lower temperatures which can cavitate pumps.
2. Do not mix.
3. Product should be sprayed with a high pressure plural-component proportioner capable of a minimum of 1000psi dynamic pressure and a maximum pressure differential of 200psi between resin and isocyanate.
4. Static pressure is typically set between 1100 and 1600psi.
5. Primary heaters and hose heaters are typically set between 115 - 140°F. Higher temperatures are utilized in winter months, lower temperatures are utilized in summer months.
6. Proper application temperature setting is the responsibility of the end user. Equipment temperature varies and can be dependent on equipment, hose length, elevation, ambient temperature, substrate temperature humidity, and other factors. If additional information is required, contact an SWD representative for more details.

APPLICATION

1. Clean surfaces according to "Preparation of Substrates" section.
2. If priming, follow manufacturer recommendations. Ensure primer is adequately cured prior to application.
3. Substrate temperatures should be between 25-130°F. Flashing is recommended at lower temperatures. Higher and lower application temperatures are possible, contact an SWD representative for more details.
4. Flush an adequate amount of material through the lines/gun prior to spraying desired surface when changing between systems. Flush amount will be dependent on prior system used. If additional information is required, contact an SWD representative for more details.
5. Do not recirculate.
6. Do not exceed a 8 inch lift per pass. It is the responsibility of the contractor to determine when the first layer has cooled sufficiently for additional passes. SWD recommends waiting a minimum of 20 minutes.
7. Before application, test material to ensure that material sprays, cures, and hardens properly.
8. Inspect applied material intermittently to ensure no problems exist. If problems are detected, discontinue application and inspect all substrates, equipment, gun, and liquid material for problem source(s).

CLEANING AND MAINTENANCE

1. Spray equipment must be maintained in proper operating condition. Failure to adequately maintain spray equipment may result in poor product performance. Refer to your equipment manufacturer's maintenance procedures for more details.
2. Contact SWD for long-term equipment storage recommendations.

ARCHITECTURAL SPECIFICATIONS

GENERAL REQUIREMENTS

The Work under this contract includes furnishing all labor, equipment's, appliances, and materials required for construction of this home in strict accordance with these specifications and the applicable drawings subject to the terms of the contract.

GENERAL CONDITIONS

1. Before commencing any work under this contract, the CONTRACTOR shall have in his possession the necessary and required insurance as governed by the State of California; policies as follows:

   a. Workmen's Compensation Insurance's: This policy shall cover the full liability of the contractor and his workmen. Each sub-contractor shall be required to provide the same for his workmen.

   b. Public Liability Insurance: This policy shall cover the full liability and claims for damages for personal injury including accidental death.

2. The Construction of this building shall comply with all applicable requirements and regulations set forth by the latest of the California Building Code; and all applicable requirements and regulations set forth by Labor Codes and local Ordinances.

3. The CONTRACTOR shall inspect the site and familiarize himself with all local conditions and take full responsibility for maintaining ingress to and egress from the site at all times.

4. Temporary water and electricity shall be provided by the CONTRACTOR and he shall pay all installation and meter charges.

5. Temporary toilet facilities shall be installed and maintained by the CONTRACTOR.

6. The CONTRACTOR shall provide, procure, and pay for all building permits required for the execution of the contract and the completion of the job.

7. During the execution of the work called for on the plans and in these specifications, the CONTRACTOR will be held responsible for any and all damage to existing adjacent property, structures, sidewalks, curbs, and gutters.

8. Upon the completion of the work, the building shall be broom cleaned and ready for occupancy. Finished surfaces scratched or damaged shall be refinished, resurfaced or replaced, as the case may be. The entire premises shall be clean and free from all debris and evidence of construction. Temporary facilities, construction and equipment shall be removed.

9. All concrete slabs, walls and driveways shall be adequately protected from damage from any source until acceptance of the work.

10. The CONTRACTOR shall check and verify drawings as to scale and dimensions; and if errors appear in the drawings or conflicts in these specifications, the CONTRACTOR shall bring them to the attention of the OWNER.

11. THE CONTRACTOR shall layout the building in accordance with the general location of the building as shown on the drawings. The CONTRACTOR shall furnish all engineering services necessary to the proper layout and construction of the building.

12. The CONTRACTOR shall make no deviations from the drawings unless such deviations are approved by the OWNER.

EXCAVATION, GRADING, AND PAVING

See plans for extent of work. In general, this consists of preparing the site, excavation of foundation trenches, all fills and backfills, removal of excess material to area designated, spreading same and finish grading and paving on areas designated. Slope finish grade to drain away from building. All filled areas are to be keyed into hillside and compacted as required.

CONCRETE WORK

1. MATERIALS

The quality of the materials used in the concrete and the quality of the concrete shall conform to the physical and chemical properties as specified in C.B.C.

a. Reinforcing wire Welded wire fabric 6" x 6" #10 (ASTM A185)
b. Design mix for 2,500 pounds per square inch concrete at 28 days. (unless noted otherwise)
c. Bill anchors to be 5/8" x 12" anchor bolts embedded 9" minimum, and located 3'-0" O.C. for two story structures and 4'-0" O.C. for single story structures. Place anchors within 12" of corners.
d. Reinforcing steel shall be deformed, intermediate grade, conforming to ASTM A615-40

FIREPLACE AND BLOCK WORK

See plans for extent of masonry work to be included in this building OWNER is to select type of rocks or bricks prior to construction. The Masonry Contractor will design the lintel and flue as required by code.

FRAMING MATERIALS

All framing lumber shall be graded in conformance with the West Coast Lumber Inspection Bureau Grading Rules No. 16 as amended to date. Grades to be as follows unless noted otherwise on the plans:

1. Mudsills-foundation grade redwood or equivalent treated materials.
2. Posts and Beams- 4" & thicker D.F. #1(Para. 130-b) F.O.H.C.
3. Joists and rafters- 2" to 4" thick, 6" & wider construction grade Douglas Fir #2 (Para. 123-c)
4. Girders- construction grade Douglas Fir #1
5. Studs- construction grade Douglas Fir #2 (Para 121-c)
6. Plywood Flooring - 3/4" Douglas Fir T & G exterior plywood CDX
7. Sub-flooring- Douglas Fir 2" x 6" T & G utility decking
8. Exposed beams- Douglas Fir #1 select F.O.H.C. (Para. 130-b)
9. Exposed ceiling -select Pine T & G decking
10. Exterior decking- select "A" grade Redwood
11. Sheathing Paper- #30 Bldg. paper Kraft type or equal

GENERAL FRAMING NOTES

1. Floors to be level within 3/16" ± all around.
2. Structural members shall not be cut for pipes, etc. unless specifically shown or noted.
3. Provide washers for all bolts.
4. Use aluminum or galvanized nails for all exterior siding or trim.
5. Use anchor hold type nails for all plywood flooring.
6. All plywood floors and exterior decking to be glued with P.L-400 or equal.
7. Use cement coated 16d sinker nails for framing.
8. Provide an 18" x 24" minimum access area to underside of home.
9. Provide access for bath sub trap; 20' maximum distance to all plumbing in crawl area.
10. All stairways to have a maximum rise of 8" and a minimum tread width of 10". Provide headroom clearance of 7'-0" min. Install handrails as required 34" to 38" above treads.
11. Unless indicated otherwise all headers are to be 4" x 12" D.F. #2.
12. Double floor joists under all parallel wall partitions.
13. All required handrails are to be 36" high and constructed to withstand a horizontal force of 20 pounds per lineal foot, applied at the top of the railing. Maximum spacing in handrails shall not exceed 6".
14. Provide an attic access of a t least 22" x 30".
15. Open flame for furnace and water heater shall be 18" above floor level if they are to be located in the garage.
16. Provide combustion air for furnace and water heaters required. Combustion air intakes to be located within 6" of floor and ceiling. Provide 6" clearance between furnace and combustibles.
17. If home has an underfloor crawl area, provide 2 square feet of vent space per each 25 linear feet of exterior wall.
18. Provide fire blocking at floor, ceiling, coves, and mid-height of walls over 10'-0" in height.
19. Provide 50 square inches of fixed vents per car to outside air within 6" of garage floor.

TRIM WORK

All external fascias shall be scarfed. No butt joints or spaced boards will be allowed. All trim connections should be tight and fit flush against the exterior.

All exterior redwood decking is to be installed in a craftsmanlike manner. Sand all mitered corners and exposed edges. Remove all sharp edges from handrails.

WOOD BASE:

CLOSETS:

a. Shelves - 3/4" plywood or particle board with glued-on solid edge or plastic lid. Solid pine shelves may be used as a substitute.
b. Clothes Pole-Hardwood 1-5/8" diameter. Provide an intermediate support for spans longer than 4'-0".
c. Hook Strip - 1" x 4" acts also as shelf support.
d. Floor:

UNDERLAYMENT: Use 3/8" particle board under all resilient flooring except for slab areas. Nail 3" at edge 1/2" in and 6" in field each way.

DRYWALL:

Includes a complete gypsum board wall and ceiling installation as indicated on the drawings. Wall board shall be 5/8" recessed edge type board such as manufactured by U.S. Gypsum Co. or equal. Nails 5d-13 1/2 gauge, cement coated, flathead, 1 5/8" long. Taping, "Perfatape" joint reinforcing tape and cement as manufactured by U.S. Gypsum Co. Use 5/8", type"X" one hour fire-rated gypsum board between garage and home where indicated on the drawings, and under stairways.

All Exterior corners to have metal edges. The best workmanship and construction practices are required. In the event the Drywall Contractor finds crooked walls or bad joints occurring in the frame structure then these should not be covered but brought to the attention of the CONTRACTOR so they may be fixed prior to covering with drywall. Special care must be taken to protect and preserve the finish wood surfaces. All doors and window sills to be trimmed flush with openings. All scraps to be hauled away within 5 days of hanging. Do not break joints at places in stairwells, header connections, or at places on two story high walls. All recessed kitchen lights to have clean straight lines. Keep sheetrock within 3/16" of all rough in boxes.

THERMAL INSULATION:

Roof: R-30 CLOSED CELL SPRAY POLYURETHANE FOAM
Ceiling: R-30 BATTS
Walls: R-23 HIGH DENSITY BATTS
Floor: R-19 BATTS
Weather-stripping: At all windows and doors, typical.

Special Notes: Provide 3-1/2" sound insulation between floors and in walls around all bathrooms, all bedrooms and laundry room.

SHEET METAL:

All sheet metal shall be 16 Oz. Copper unless indicated otherwise on the drawings. Sheet metal work includes chimney saddles, gutters, downspouts, flashing, counter flashing and all other sheet metal not specifically a part of other trades. Fabrication and installation in accordance with the best workmanship standards is required. Soldered joints shall have continuous solder and be watertight. Free edges projecting from adjoining surfaces shall have metal bent on itself. Nails shall be copper.

Downspouts shall be of round design unless noted otherwise. Offsets shall be fully soldered. Connection to gutter shall be rigid and watertight. Fascia gutter to be straight with all intersection soldered. Do not use short pieces.

Provide vents to kitchen fans, bath fans, gas ranges, gas heaters, and any other areas indicated on the drawings.

SPECIAL NOTES:

ROOFING:

SPECIAL NOTES: MATCH (E) FLAT CLAY TILE

METAL ROOFING COLOR TO BE OWNER/ARCHITECT APPROVED

DOORS:

See drawings for size, location, and type of doors needed. Interior doors shall be 1 3/4" solid core type unless indicated otherwise. Provide 1 3/4" solid core door with self-closing hinge between home and garage. Sliding doors shall have tempered glass panels with operable screen panel. Sizes as indicated on drawings. Pocket door frames to be Nordal or equal.

SPECIAL NOTES:

WINDOWS:

JELD-WEN

See drawings for size and location of windows. Windows to be A or approved equal. Provide screens for all openings. Windows shall be straight, plumb, and true, and shall operate easily without binding.

SPECIAL NOTES:

FIXED GLASS:

See drawings for size and location of fixed glass. All glazing shall be guaranteed water tight and any glass which leaks shall be re-glazed. Size glass to meet minimum C. B. C. requirements.

SPECIAL NOTES:

SHOWER DOORS AND MIRRORS:

See drawings for size and location of shower doors and mirrors. Shower doors to have approved shatter-proof glass. Mirrors to be 1/4" polished plate glass.

SPECIAL NOTES: 3/8" CLR FRAMELESS STAR-FIRE TEMP. GL.
PROVIDE SHOP DWG'S FOR APPROVAL

HARDWARE:

An allowance of $ 5,000 is to be made for finish hardware. This is to include all door knobs, cabinet handles, door, pulls, towel bars, paper holders, etc.

SPECIAL NOTES: TO BE OWNER APPROVED
EMTEK OR EQUAL

PAINTING:

MATERIALS: Paint materials shall be as manufactured by the Kelly-Moore Co. or an approved equal, unless otherwise noted.

WORKMANSHIP: No painting or finishing shall be done under conditions which jeopardize the quality of the work. Surfaces to be finished shall be in proper condition to receive same. Each coat shall be applied at the proper consistency, free of runs, sags, brush marks, spattering, or any other evidence of poor workmanship. Surfaces shall be sanded smooth. Nail holes and imperfections in the wood shall be filled with material of the same color as the finish. All items having factory finish will not be painted. All other surfaces shall be painted or finished whether specifically mentioned herein or not.

EXTERIOR SURFACES: Wood siding, trim, fascia, decks, beams, railings, treat with a semi-transparent or heavy body penetrating stain unless noted otherwise. Exterior doors use two coats of exterior type spar varnish. Prime all galvanized metal and coat with exterior flat enamel.

INTERIOR SURFACES: Natural woods use semi-transparent stain and sealer. Cabinets and wood doors to be sanded, stained, sealed, and lacquered. Drywall in kitchen and bath areas to be sealed and stippled. Other drywall areas to have one coat of interior flat latex wall finish. Special care should be taken to preserve natural woodwork. Work shall be neat, clean and accurate so as not to damage finish of natural wood surfaces. All surfaces not intended to have paint shall be left in clean condition.

SPECIAL NOTES:

TILE:

Tile shall be installed in accordance with the best methods and construction practices. Tiles are to be soaked before applying and joints are to be kept neat, symmetrical and all lines true and straight. Joints and tile shall be thoroughly washed. Owner to select color.

SPECIAL NOTES: TO BE OWNER APPROVED

FLOORING MATERIALS:

An allowance of $ 85/SQ.YD. is to be made for floor coverings. This is to include all resilient flooring, carpets, and wood floors used in the project. Ceramic tile floors are not included in this allowance.

SPECIAL NOTES:

KITCHEN APPLIANCES:

Furnish and install the following:
ENERGY STAR COMPLIANT TO BE OWNER APPROVED

PLUMBING:

The Plumbing Contractor shall design and install a complete plumbing system as indicated on the drawings. Pipes shall be sized adequately to accommodate the fixtures served. The Plumbing Contractor shall make all necessary connections to utilities shown on plot plan and install all piping, etc. required. Stop valves should be at each fixture or appliance. Plumb system for future soft water system. Plumb for a least 4 exterior hose bibs or more if the size of the house indicates. Provide plumbing for automatic dishwasher. Provide a pressure relief valve at water heater. Provide a pressure reducer if water pressure exceeds 50 PSI.

SPECIAL NOTES:

ELECTRICAL:

The Electrical Contractor will design his system for a complete and operating system. The drawings show only the location and type of outlets, lighting, including control switches. No extra charges will be paid for furnishing items not specified in the plans but required by the local electrical codes. Provide doorbell as standard item. Provide all recessed, under counter, and soffit lighting if indicated on plans.

ELECTRICAL FIXTURES:

Provide an allowance of $ 100/PER for fixtures not specified on plans and normal installation.

HEATING SYSTEM:

This system to be designed and installed by the Contractor doing the installation. Type of system:

ELECTRIC HEAT PUMP (SEE MECHANICAL SCHEMATICS)

GENERAL NOTES:

1. The CONTRACTOR and all sub-contractors shall guarantee and be responsible for and make good all defects due to faults of labor or materials in the work included in the contract for one year following the completion of the structure.

2. All sub-contractors will be responsible for damages caused by: poor workmanship, system failures, breakage, or their employees' irresponsibilities that cause additional time and expense to the general contractor. Sub-contractors will be charged for such items as they may occur for a period of one year after the home is completed.

Michael Helm, AIA Architect & Associates
200 Seventh Avenue, #110 Santa Cruz, California 95062 (831) 476-5386

REMODEL & ADDITIONS TO THE:
RENFREW RESIDENCE
14500 ARNERICH HILL ROAD - APN 537-12-012
LOS GATOS, CALIFORNIA

ARCHITECTURAL SPECIFICATIONS

11.14.22
NTS
MSH
2108

24

GENERAL

WHERE NOTED, SPECIAL INSPECTION AND TESTING SHALL BE PROVIDED BY A QUALIFIED INDEPENDANT SPECIAL INSPECTION AND TESTING AGENCY. THE SPECIAL INSPECTION AND TESTING AGENCY SHALL BE SELECTED FROM THE BUILDING DEPARTMENT'S APPROVED RECOGNITION LIST. SITE VISITS BY GEORGE REYNOLDS AND ASSOCIATES, STRUCTURAL ENGINEERS ARE NOT SPECIAL INSPECTIONS.

NO STRUCTURAL MEMBER SHALL BE CUT OR NOTCHED UNLESS SPECIFICALLY SHOWN, NOTED, OR APPROVED BY THE STRUCTURAL ENGINEER. ALL WORK SHALL COMPLY WITH THE 2019 CALIFORNIA BUILDING CODE, AND ALL APPLICABLE LOCAL CODES AND ORDINANCES.

CONTRACTOR SHALL SUBMIT COPIES OF TEST AND INSPECTION REPORTS TO THE ENGINEER AND BUILDING DEPARTMENT.

FOUNDATIONS

ALL GRADING AND SITE WORK SHALL BE DONE IN ACCORDANCE WITH THE GEOTECHNICAL REPORT BY G2 EARTH, REPORT #14953 (JULY 2022)

THE CONTRACTOR SHALL NOTIFY THE GEOTECHNICAL ENGINEER'S OFFICE A MINIMUM OF 48 HOURS PRIOR TO ALL FOOTING EXCAVATIONS TO ENSURE THAT THE ANTICIPATED SOIL AND ROCK CONDITIONS ARE CONSISTENT WITH THOSE NOTED IN THE GEOTECHNICAL REPORT. THE GEOTECHNICAL ENGINEER IS TO BE RETAINED TO PROVIDE OBSERVATION OF THE SITE PREPARATION AND RECOMPACTION, THE FOOTING EXCAVATIONS, AND THE PLACEMENT AND COMPACTION OF THE BASE ROCK.

THE GEOTECHNICAL ENGINEER SHALL PROVIDE A LETTER OF ACCEPTANCE FOR ALL FOUNDATION PREPARATION, BACKFILL, COMPACTION , ETC., PRIOR TO THE PLACEMENT OF ANY FOUNDATION CONCRETE. HE SHALL ALSO PREPARE A FINAL COMPREHENSIVE REPORT FOR THE BUILDING DEPARTMENT STATING THAT ALL WORK WAS DONE PER HIS GEOTECHNICAL REPORT, AND WHAT, IF ANY CHANGES WERE DONE DURING FOUNDATION CONSTRUCTION THAT WERE DIFFERENT FROM THE REVIEWED GEOTECHNICAL REPORT.

THE CONTRACTOR SHALL DIRECTLY CONTACT THE GEOTECHNICAL ENGINEER TO COORDINATE SITE VISITS, OBSERVATIONS, TESTS, ETC. THAT ARE REQUIRED BY THEIR OFFICE.

EXCAVATIONS SHALL CONFORM AS NEARLY AS POSSIBLE TO THE NEAT LINES REQUIRED BY THE SIZE AND SHAPE OF THE FOOTINGS SHOWN ON THE DRAWINGS. FOOTINGS SHALL BE CAST IN EARTH TRENCHES WITHOUT FORMING. OVER EXCAVATION SHALL BE BACK FILLED WITH CONCRETE. WET TRENCHES IMMEDIATELY BEFORE PLACING CONCRETE.

IF FILL IS REQUIRED, IT SHALL BE COMPACTED WITH OBSERVATION AND COMPACTION TESTING PERFORMED BY A REPRESENTATIVE OF THE GEOTECHNICAL ENGINEER. PROVIDE NON-EXPANSIVE FILL AND PERFORM GRADING IN ACCORDANCE WITH GEOTECHNICAL REQUIREMENTS.

CONTRACTOR SHALL BE RESPONSIBLE FOR ALL TEMPORARY SLOPES, TRENCHES, AND FOUNDATIONS EXCAVATED AT THE SITE AND THE DESIGN OF ANY REQUIRED TEMPORARY SHORING. SHORING, BRACING, AND BENCHING SHALL BE PERFORMED BY THE CONTRACTOR IN ACCORDANCE WITH THE STRICTEST GOVERNING SAFETY STANDARDS.

ALL FILL AREAS UNDER BUILDING AND PARKING AREAS SHALL BE COMPACTED TO MINIMUM 90% DENSITY AND CERTIFIED BY A GEOTECHNICAL ENGINEER. PROVIDE NON-EXPANSIVE FILL AND PERFORM GRADING IN ACCORDANCE WITH GEOTECHNICAL REQUIREMENTS.

DEEP EXCAVATIONS SHALL BE CUT AND SUPPORTED PER DIRECTION OF GEOTECHNICAL ENGINEER. DRILLED PIER HOLES SHALL BE INSPECTED BY THE GEOTECHNICAL ENGINEER, WHO WILL DETERMINE THEIR FINAL DEPTH. NOTIFY STRUCTURAL ENGINEER BEFORE SHORTENING ANY PIERS. ALL GROUND WATER SHALL BE REMOVED FROM THE PIER HOLES PRIOR TO PLACING CONCRETE.

FOOTING EXCAVATIONS SHALL BE OBSERVED BY THE PROJECT GEOTECHNICAL ENGINEER PRIOR TO PLACING REINFORCING STEEL.

FOOTINGS SHALL NOT HAVE PLUMBING, CONDUIT, OR OTHER PENETRATIONS WITHOUT THE PRIOR APPROVAL BY GEORGE REYNOLDS AND ASSOCIATES, STRUCTURAL ENGINEERS. SUPPLEMENTAL REINFORCING AND / OR OTHER MODIFICATIONS SHALL BE REQUIRED FOR FOOTING PENETRATIONS PER THE DIRECTION OF GEORGE REYNOLDS AND ASSOCIATES, STRUCTURAL ENGINEERS.

DO NOT BACK FILL STEM WALL / PIERS OR REMOVE SHORING UNTIL 75% DESIGN STRENGTH HAS BEEN OBTAINED.

FOOTINGS SHALL NOT BE EXPOSED AT THE LOWEST FINISH GRADE.

DIMENSIONS

DIMENSIONS, UNLESS OTHERWISE SHOWN, ARE TO THE CENTER LINE OF COLUMNS AND BEAMS OR ROUGH CONCRETE SURFACES.

CONTRACTOR SHALL VERIFY, AND BE RESPONSIBLE FOR, ALL DIMENSIONS AND CONDITIONS ON THE JOB. NOTIFY THIS OFFICE OF ANY VARIATIONS FROM THE DIMENSIONS AND CONDITIONS SHOWN ON THESE DRAWINGS PRIOR TO ANY CONSTRUCTION.

CONCRETE

CONCRETE WORK SHALL CONFORM TO ALL REQUIREMENTS OF ACI 318-(LATEST EDITION), "BUILDING CODE REQUIREMENTS FOR STRUCTURAL CONCRETE", EXCEPT AS MODIFIED BELOW:

ALL CONCRETE SHALL BE REGULAR WEIGHT HARD ROCK, AND HAVE A MINIMUM 28-DAY COMPRESSIVE STRENGTH OF 3000 PSI (FOR QUALITY CONTROL ONLY). MAXIMUM SLUMP SHALL BE FOUR INCHES. USE TYPE II CEMENT PER ASTM C150. MAXIMUM AGGREGATE SIZE SHALL BE ¾ INCH.

THE WATER / CEMENT RATIO FOR ALL CONCRETE POURED DIRECTLY ONTO THE VAPOR BARRIER SHALL BE 0.45

CONCRETE FOR SITE FLATWORK SHALL HAVE A MINIMUM OF 2500 PSI, 28-DAY COMPRESSIVE STRENGTH. SPECIAL INSPECTION IS NOT REQUIRED FOR CONCRETE OR SITE FLATWORK, UNLESS NOTED OTHERWISE.

PLACE CONCRETE IN LAYERS NOT EXCEEDING 18 INCHES IN DEPTH. FREE FALL OF CONCRETE SHOULD NOT EXCEED 5 FEET IN UNEXPOSED WORK NOR 3 FEET IN EXPOSED WORK. PLACE CONCRETE IN LEVEL LIFTS THROUGHOUT FORM WORK RECEIVING THE MATERIAL.

ALL CONCRETE WORK SHALL BE CAST-IN-PLACE UNLESS NOTED OTHERWISE. ALL FORMS SHALL BE THOROUGHLY MOISTENED BEFORE CONCRETE IS PLACED.

BEFORE DEPOSITING NEW CONCRETE ON OR AGAINST SET CONCRETE, CLEAN, SATURATE, AND SLUSH A COAT OF CONCRESIVE LIQUID 1001LPL BY MASTER BUILDERS OVER THE EXISTING CONCRETE, PER MANUFACTURER'S INSTRUCTIONS.

CONSTRUCTION JOINT CONTACT SURFACES SHALL BE ROUGHENED TO ¼".

CONSOLIDATE ALL CONCRETE BY VIBRATION, SPADING, RODDING OR FORKING. THOROUGHLY WORK CONCRETE AROUND REINFORCEMENT AND EMBEDDED ITEMS, ELIMINATE ALL AIR OR STONE POCKETS WHICH MAY CAUSE HONEYCOMBING, PITTING OR PLANES OF WEAKNESS.

OPERATE VIBRATORS ONLY WITH EXPERIENCED PERSONNEL. LIMIT DURATION OF VIBRATION TO THAT NECESSARY TO PRODUCE SATISFACTORY CONSOLIDATION WITHOUT CAUSING OBJECTIONABLE SEGREGATION. DO NOT INSERT VIBRATOR INTO LOWER COURSES THAT HAVE BEGUN TO SET. UNDER NO CONDITION IS VIBRATOR TO BE PLACED AGAINST REINFORCING STEEL.

MINIMUM ANCHOR BOLT IS 5/8" DIA. X 12" @ 48" O.C. WITH A MINIMUM OF TWO BOLTS PER SILL PIECE, WITHIN 12" OF EACH END, BUT NO CLOSER THAN 4" FROM EACH END. ANCHOR BOLTS LESS THAN 1-1/2" FROM SILL EDGE SHALL BE REPLACED WITH EPOXY SET ANCHOR BOLT (EMBED 6" MIN). PROVIDE PL 3" SQUARE x ¼" WASHER WITH ALL ANCHOR BOLTS. ALL BOLTS & PLATES SHALL BE HOT DIP GALVANIZED. MINIMUM ANCHOR BOLT EMBEDMENT SHALL BE 8 INCHES.

SET ALL POST BASES FLUSH WITH TOP OF CONCRETE.

EXPANSION ANCHOR BOLTS AND POWER DRIVEN NAILS SHALL NOT BE INSTALLED UNTIL CONCRETE HAS REACHED DESIGN STRENGTH.

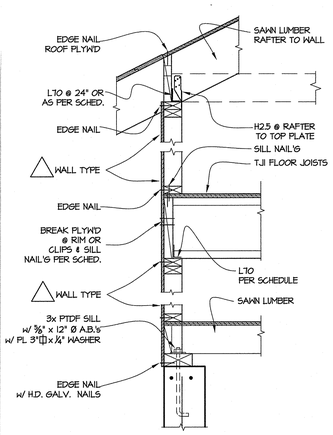

7 TYPICAL SHEAR TRANSFER DETAILS

REINFORCING STEEL

FURNISH AND ERECT REINFORCING STEEL IN ACCORDANCE WITH THE ACI MANUAL OF STANDARD PRACTICE FOR DETAILING REINFORCED CONCRETE STRUCTURES.

USE DEFORMED REINFORCED BAR PER ASTM A615. FOR #3 BAR AND SMALLER, USE GRADE 40. FOR #4 BAR AND LARGER, USE GRADE 60.

ALL REINFORCEMENT SHALL BE CONTINUOUS. STAGGER SPLICES IN ADJACENT BARS. CONTACT SPLICES SHALL LAP 40 DIAMETERS MINIMUM.

HOLD REINFORCEMENT IN ITS TRUE HORIZONTAL AND / OR VERTICAL POSITION WITH DEVICES SUFFICIENT TO PREVENT DISPLACEMENT.

REINFORCING STEEL SHALL NOT BE WELDED. NO EXCEPTIONS.

SUPPORT HORIZONTAL STEEL AT BOTTOM OF FOOTING ON MORTAR BLOCKS. MINIMUM 3-INCH CLEARANCE FOR SURFACES POURED AGAINST EARTH, 2" CLEARANCE AT FORMED SURFACES EXPOSED TO EARTH, AND MINIMUM 1.5 INCH U.N.O.

STRUCTURAL STEEL

ALL STRUCTURAL STEEL SHALL BE FABRICATED AND ERECTED IN CONFORMANCE WITH THE AISC MANUAL OF STEEL CONSTRUCTION (LATEST EDITION).

ALL STRUCTURAL STEEL WIDE FLANGE SHAPES SHALL CONFORM TO ASTM A-572 GRADE 50, WITH SPECIAL REQUIREMENTS PER AISC TECHNICAL BULLETIN #3, DATED MARCH PART. ALL STEEL CHANNELS, ANGLES, PLATES, AND BARS SHALL CONFORM TO ASTM A-36. ALL TUBE COLUMNS SHALL CONFORM TO ASTM A-500, GRADE B. ALL PIPE COLUMNS SHALL CONFORM TO ASTM A-53 GRADE B.

THE ALIGNMENT OF COLUMNS SHALL BE WITHIN THE TOLERANCES SPECIFIED IN THE AISC CODE OF STANDARD PRACTICE FOR STEEL BUILDINGS AND BRIDGES.

PROVIDE SPECIAL INSPECTION FOR ALL WELDING CONFORMING TO C.B.C. SECTION 1704.3 ALL WELDED MOMENT CONNECTIONS SHALL BE INSPECTED AND NONDESTRUCTIVE TESTED AS PER C.B.C. SECTIONS 1705.3.2 AND SECTION 1705. ALL WELDING SHALL BE MADE BY E70XX LOW HYDROGEN ELECTRODES.

WELD SIZES SHOWN ARE MINIMUM AND MAY HAVE TO BE INCREASED ACCORDING TO THE LIMITATIONS STATED IN THE 14TH AISC SECTION J2.

METAL PRIMER SHALL CONFORM WITH FEDERAL SPECIFICATION TT-P-645A FOR SHOP COAT PAINT. APPLY ONE COAT TO ALL SURFACES EXCEPT AT AREAS OF FIELD WELDING, HIGH STRENGTH BOLTING AND WHERE EMBEDDED IN CONCRETE. FIELD PAINT ALL EXPOSED FIELD WELDS.

ALL ANCHOR BOLTS AND THREADED RODS SHALL BE A307 STEEL, U.N.O.

ALL BOLTED STEEL CONNECTIONS SHALL BE MADE WITH A325N BOLTS U.N.O.

ALL NUTS SHALL BE INSTALLED OVER PLATE WASHERS OR HEAVY CUT WASHERS.

ALL STRUCTURAL STEEL TO BE EMBEDDED IN CONCRETE OR TO RECEIVE FIREPROOFING MATERIAL SHALL BE CLEAN AND FREE OF PAINT, OIL, OR DIRT.

PROVIDE ENGINEER WITH STEEL SHOP DRAWINGS TO AVOID ERRORS.

ALL WELDING SHALL BE ELECTRIC ARC PER AWS D1.1 LATEST EDITION, WITH E70XX ELECTRODE.

PROVIDE WELDERS CERTIFIED FOR THE TYPE OF WELD CALLED FOR ON DRAWING AS PER CALIFORNIA BUILDING CODE (C.B.C. 1704.3) REQUIREMENTS.

REFER TO SHEAR TRANSFER DETAILS							
SHEAR WALL TYPE	PLYWD	EDGE NAIL'G	FIELD NAIL'G	SHEAR TRANSFER		BLK'G @ FLOOR	ANCHOR BOLTS
				SILL NAIL	L70 CLIPS		
1	½" CDX	10d @ 6"	10d @ 12"	16d @ 4"	24" O.C.	2x	⅝" Ø @ 48"
2*	½" CDX	10d @ 4"	10d @ 12"	16d @ 3"	16" O.C.	4x	⅝" Ø @ 32"
3*	½" CDX	10d @ 3"	10d @ 12"	(2) x 16d @ 4"	12" O.C.	4x	⅝" Ø @ 24"
4*	½" CDX	10d @ 2"	10d @ 12"	(2) x 16d @ 4"	10" O.C.	4x	⅝" Ø @ 18"
5*	¾" CDX	10d @ 2"	10d @ 12"	SEE DETAILS →			

NOTE: - BLOCK ALL EDGES OF PLYWD
* - PROVIDE 3x (MIN.) STUDS & BLK'G @ ALL PLYWD BUTT JOINTS AS PER DETAIL 5/25
- DO NOT BREAK PLYWD SKIN BY OVERDRIVING NAILS
- PRE-DRILL AS REQ'D TO AVOID SPLITTING SILLS, ETC.
- SHEAR TRANSFER BLOCKS & CLIPS MAY BE OMITTED IF PLYWD @ SHEAR WALL IS CONTINUOUS PAST FLOOR FRAMING (I.E. @ EXTERIOR WALLS)

6 SHEAR WALL SCHEDULE

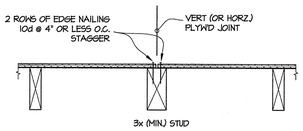

5 PLYW'D JOINT DETAIL

27	MST27 @ 4x POST. LAP & NAIL TO BEAM IN FLOOR BELOW
2	HDU2 @ 4x POST w/ ⅝" Ø THROUGH FLOOR TO BRACKET @ POST BELOW OR SSTB24 ANCHOR @ NEW END OR ⅝" Ø ROD TO CUSTOM BRACKET AS DETAIL 1, 2, & 4 ON SHT 14
5	HDU5 @ 4x POST w/ ⅝" Ø THROUGH FLOOR TO BRACKET @ POST BELOW OR SSTB24 ANCHOR @ NEW END OR ⅝" Ø ROD TO CUSTOM BRACKET AS DETAIL 1, 2, & 4 ON SHT 14
8	HDU8 @ 4x POST w/ ⅞" Ø ROD THROUGH FLOOR TO BRACKET @ POST BELOW OR SSTB28 ANCHOR @ NEW FOUNDATION OR ⅞" Ø ROD TO CUSTOM BRACKET AS DETAILS 1, 2 & 4 ON SHT. 14
14	HDU14 @ 4x8 POST w/ SBI x 30 ANCHOR AS DETAIL 12/18

1. LOCATE HD's AT ENDS OF SHEAR PANELS
2. EDGE NAIL SHEAR WALL PLYWD TO ALL POSTS @ HD's
3. HARDMOUNT ANCHORS TO FORMWORK PRIOR TO CONCRETE POUR
4. USE SIMPSON CO. "SET-XP" EPOXY OR APPROVED EQUAL (AS REQ'D)

4 HOLDOWN SCHEDULE

TIMBER

ALL WOOD BOLT CONNECTIONS SHALL HAVE A WASHER UNLESS A STEEL PLATE IS SPECIFIED. NO COUNTERSINKING PERMITTED WITHOUT ENGINEER'S APPROVAL.

LUMBER SHALL CONFORM TO GRADING RULES OF WWPA, W.C.L.I.B. RULES #17, OR OTHER PER C.B.C. 2303.1. MAXIMUM MOISTURE CONTENT SHALL NOT EXCEED 19%.

ALL EXPOSED JOISTS, BEAMS, & GLULAMS SHALL HAVE A PRESSURE PRESERVATIVE TREATMENT UNLESS ALL-HEART REDWOOD IS SPECIFIED.

ALL FIELD CUTS AND DRILLED HOLES FOR EXPOSED MEMBERS SHALL BE TREATED IN ACCORDANCE WITH AMERICAN WOOD PRESERVERS ASSOCIATION AWPA M4.

LUMBER SHALL BE GRADE MARKED DOUGLAS FIR:

JOISTS, LEDGERS, PURLINS, AND BEAMS	NO.1 OR BETTER
RAFTERS AND POSTS	NO.1 OR BETTER
STUDS, SILLS, & PLATES	NO.2 OR BETTER

ALL SILLS AND FRAMING MEMBERS IN CONTACT WITH CONCRETE SHALL BE PRESSURE-TREATED DOUGLAS FIR. THE PRESERVATIVE TREATMENT UTILIZED SHALL BE PERFORMED IN ACCORDANCE WITH AWPA STANDARD C-2.

THE MANUFACTURE AND FABRICATION OF ANY STRUCTURAL GLUED LAMINATED TIMBER SHALL BE UNDER THE SUPERVISION OF QUALIFIED PERSONNEL. PROVIDE APA-EWS CERTIFICATES TO THE APPLICABLE BUILDING INSPECTOR.

PROVIDE A.I.T.C. CERTIFICATE WITH ALL GLULAM BEAMS. PROVIDE NO CAMBER WITH GLULAM BEAMS UNLESS NOTED OTHERWISE. PROVIDE (24F-V4) STRESS GRADE UNLESS NOTED OTHERWISE.

ALL HANGERS, ETC. SHALL BE ATTACHED DIRECTLY TO THE FRAMING MEMBERS. DO NOT NAIL HARDWARE OVER PLYWOOD OR SHIMS, U.N.O.

OSB PANELS MAY BE USED IN LIEU OF PLYWOOD FOR GREEN POINTS OR ECONOMIC REASONS. ALL NOTES FOR PLYWOOD APPLY TO SUBSTITUTED OSB PANELS.

ALL PLYWOOD SHEATHING APPLIED TO WALLS, FLOORS, AND / OR ROOFS SHALL HAVE A ⅛-INCH GAP BETWEEN ADJACENT SHEETS.

TYPICAL PLYWOOD NAILING: SET ALL NAIL GUNS TO AVOID BREAKING THE TOP PLYWOOD LAYER. USE A HAMMER TO SEAT NAILS FLUSH TO THE PLYWOOD. NAILS THAT BREAK THE SURFACE OF THE PLYWOOD ARE UNACCEPTABLE AND REQUIRE SUPPLEMENTAL NAILS. NAILS SHALL BE ⅜" MINIMUM FROM THE PLYWOOD EDGES AND SHALL BE INSTALLED PERPENDICULAR TO THE PLYWOOD SURFACE. NAILS LOCATED TOO CLOSE TO A PANEL EDGE ARE UNACCEPTABLE AND REQUIRE SUPPLEMENTAL NAILS. NUMEROUS NAILING VIOLATIONS WILL VOID THE SHEET AND REQUIRE THE PANEL TO BE REPLACED.

ROOF PLYWOOD SHALL BE OF THICKNESS AS PER PLANS WITH A MIN. A.P.A. RATING OF 24 / 0 U.N.O. MIN. NAILING IS TO BE 10d @ 6" O.C. INTERMEDIATE FRAMING U.N.O. UNSUPPORTED PLY EDGES SHALL BE SUPPORTED BY BLOCKING OR PLYWOOD CLIPS.

FLOOR AND DECK PLYWOOD SHALL BE ¾" WITH A MIN. A.P.A. RATING OF 40 / 20, U.N.O. WHERE NOTED ON THE PLANS, DECK PLYWOOD SHALL HAVE A C-C EXTERIOR EXPOSURE RATING. OTHERWISE, EXPOSURE 1 CDX PLYWOOD SHALL BE USED. MIN. NAILING IS TO BE 10d @ 6" O.C. EACH EDGE, EACH SHEET, AND 10d @ 10" O.C. AT INTERMEDIATE FRAMING U.N.O. UNSUPPORTED PLYWOOD EDGES SHALL BE EITHER T&G OR SUPPORTED BY BLOCKING. FLOOR PLYWOOD SHALL BE GLUED TO SUPPORTING JOISTS AND BLOCKING.

ALL ROOF AND FLOOR PLYWOOD SHALL BE APPLIED WITH THE FACE GRAIN ORIENTED PERPENDICULAR TO THE DIRECTION OF THE SUPPORTIVE FRAMING U.N.O.

ALL FLOORS AND ROOFS SHALL BE CONSTRUCTED WITH PLYWOOD SHEETS NOT LESS THAN FOUR FEET BY EIGHT FEET. EACH PANEL SHALL BE AT LEAST 24 INCHES IN WIDTH. THE ADJACENT SHEET MAY HAVE TO BE TRIMMED TO ACCOMMODATE THIS REQUIREMENT. PANELS LESS THAN 24 INCHES IN WIDTH SHALL HAVE ALL EDGES SUPPORTED BY EITHER FRAMING MEMBERS OR BLOCKING.

ALL ROOF OR FLOOR FRAMING SHALL BE 8-INCH NOMINAL OR WIDER AND NAILS SHALL BE STAGGERED WHERE DIAPHRAGM NAILS ARE SPACED 2 INCHES, 2 ½ AND 3 INCHES ON CENTER AS PER TABLE 2306.2(1) OF THE 2019 C.B.C.

THE EDGES OF ALL SHEAR WALL PLYWOOD PANELS SHALL BE BLOCKED WITH A MINIMUM OF 2x MATERIAL. EACH PANEL SHALL BE AT LEAST 24 INCHES IN WIDTH -- THE ADJACENT SHEET MAY HAVE TO BE TRIMMED TO ACCOMMODATE THIS REQUIREMENT. ALL SHEAR WALL PANEL EDGES SHALL BE BACKED WITH 3x MATERIAL WHERE DESIGNATED, PER C.B.C. TABLE 2306.3

PLYWOOD SHEAR WALL HOLDOWN LOCATIONS: THE NEW HOLDOWN LOCATIONS SHOWN ON THE PLANS ARE APPROXIMATE. THE HOLDOWNS AND HOLDOWN STUDS SHALL BE LOCATED AS CLOSE TO THE SHEAR WALL ENDS AS POSSIBLE, U.N.O. HOLDOWNS AND HOLDOWN STUDS SHALL NOT BE LOCATED GREATER THAN 12-INCHES FROM THE END OF THE SHEAR WALL, U.N.O.

ALL SOLID-SAWN RECTANGULAR LUMBER BEAMS, RAFTERS AND JOISTS SHALL BE SUPPORTED LATERALLY TO PREVENT ROTATION OR LATERAL DISPLACEMENT IN ACCORDANCE WITH N.D.S. 3.3.3

ROOF JOISTS OR RAFTERS OF MORE THAN 8-INCH DEPTH SHALL BE PROVIDED WITH BRIDGING EVERY 10 FEET. BRIDGING SHALL BE IN ACCORDANCE WITH N.D.S. 3.3.3

ALL BLOCKING SHALL BE FIRMLY ATTACHED TO THE SUPPORTING FRAMING WITH TOE NAILS OR FRAMING CLIPS.

USE COMMON NAILS. WHERE NOT SPECIFIED OTHERWISE, THE NAILING REQUIREMENTS OF CBC PERTAIN.

USE STRONG-TIE METAL CONNECTORS BY SIMPSON CO., OR APPROVED EQUAL. PROVIDE NAILING AS PER SIMPSON CO. SPECIFICATIONS.

ALL FRAMING HARDWARE AND FASTENERS EXPOSED TO WEATHER OR AT PRESSURE TREATED LUMBER SHALL BE HOT-DIPPED GALVANIZED 2.0 oz/S.F., STAINLESS STEEL OR SILICON BRONZE.

BOLT HOLES SHALL BE NOMINAL DIAMETER OF BOLT PLUS 1/16 INCH. ALL WOOD BOLT CONNECTIONS SHALL HAVE A WASHER UNLESS STEEL PLATE IS SPECIFIED. DO NOT COUNTERSINK.

TYPICAL TOP PLATE SPLICE: MINIMUM LAP SHALL BE FOUR FEET LONG NAILED WITH 16d @ 4" O.C. UNLESS NOTED OTHERWISE.

PROVIDE DOUBLE JOIST UNDER ALL PARALLEL WALLS U.N.O.

FOR SHEAR WALL NAILING, ANCHOR BOLTS, AND SHEAR TRANSFER NAILING, SEE SHEAR WALL SCHEDULE.

MANUFACTURED WOOD PRODUCTS SUPPLIED BY (WEYERHAEUSER ILEVEL (OR APPROVED EQUAL) SHALL BE "SILENT FLOOR SYSTEM" TJI FLOOR JOISTS, (1.5E & 1.3E) TIMBERSTRAND LSL BEAMS, (1.9E) MICRO.LAM LVL, AND (2.0E) PARALLAM PSL IN THE PLANS. PROVIDE ALL BLOCKING, BRACING, WEB STIFFENER'S & FILLER BLOCKS @ WEBS AS REQUIRED BY MANUFACTURER & BUILDING CODE FOR A COMPLETE STRUCTURAL SYSTEM.

GLULAM BEAMS (24 F-V4) OF WIDTHS 3 ½" & 5 ½" SHALL BE "X-BEAMS" AS SUPPLIED BY ROSBORO SPRINGFIELD, OR. PHONE: 1-888-323-2304, info@rosboro.com OR APPROVED EQUAL

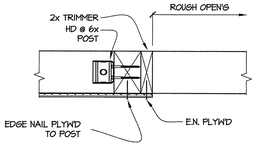

3 TYPICAL PHD @ OPEN'G

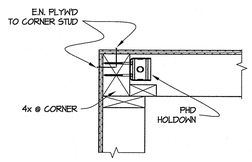

2 TYPICAL PHD @ CORNER

EPOXY CONNECTIONS

USE "SIMPSON" SET-XP EPOXY FOR ALL EPOXYSET THREADED RODS, BOLTS, AND / OR REINFORCING BARS SET INTO CONCRETE. EPOXY INJECTION SHALL BE PERFORMED IN ACCORDANCE WITH THE MANUFACTURER'S PROCEDURES. PROVIDE SPECIAL INSPECTION DURING THE INSTALLATION OF THE ANCHORS, IN ACCORDANCE WITH SECTION 1704.4 OF THE 2019 C.B.C.

"SIMPSON" SET ET, ETIF, AND / OR ETR EPOXY SHALL NOT BE USED IN SUBSTITUTION FOR "SIMPSON" SET-XP EPOXY. THE USE OF "SIMPSON" ET, ETIF, AND / OR ETR EPOXY IS UNACCEPTABLE AND WILL BE REJECTED.

OMISSIONS

CONTRACTOR SHALL FAMILIARIZE HIMSELF / HERSELF WITH ALL CONDITIONS OF THE PROJECT AND BE RESPONSIBLE FOR ALL WORK REQUIRED TO COMPLETE THE PROJECT EVEN IF NOT SPECIFICALLY MENTIONED ON DRAWINGS.

IN THE EVENT THAT CERTAIN FEATURES OF THE WORK ARE NOT FULLY SHOWN ON THE DRAWINGS OR CALLED FOR IN THE GENERAL NOTES, THEN THEIR CONSTRUCTION SHALL BE OF THE SAME CHARACTER AS FOR SIMILAR CONDITIONS THAT ARE SHOWN OR CALLED FOR.

SPECIAL INSPECTIONS & TESTING

1. SPECIAL GRADING, EXCAVATION, AND FILLING
   - ☒ PERIODIC INSPECTION - PER GEOTECHNICAL ENGINEER
   - ☒ SUBGRADE TESTS
   - ☒ COMPACTION TESTS
2. STRUCTURAL WELDING
   PERIODIC VISUAL INSPECTION
   - ☒ FILLET WELDS ≤ ¾"

   CONTINUOUS VISUAL INSPECTION
   - ☒ ALL WELDING > 5/16"
   - ☐ REINFORCING STEEL - NOT PERMITTED
   - ☐ OTHER
3. SHEAR WALL NAIL'G:
   - ☒ ALL WALLS NAILED @ 4" O.C. OR LESS

NOTES:
A. SPECIAL INSPECTIONS DO NOT NEGATE THE C.B.C. REQUIREMENTS FOR THE APPLICABLE BUILDING DEPARTMENT INSPECTIONS.
B. REFER TO THE GENERAL NOTES FOR MORE INFORMATION.
C. SITE VISITS BY G. REYNOLDS AND ASSOC. WILL ONLY BE CONSIDERED "SPECIAL INSPECTIONS" WHEN ALLOWED BY THE BUILDING DEPT. (LIMITED TO INSPECTIONS OF EPOXY SET ANCHORS AND NAILING OF PLYWOOD SHEAR WALLS) AND ARRANGED WITH THE OWNER / CONTRACTOR PRIOR TO THE SITE VISIT.

PROJECT DESIGN INFORMATION:

ROOF LIVE LOAD:	20 PSF
FLOOR LIVE LOAD.	40 PSF
ALLOWABLE SOIL BEARG CAPACITY: PER GEOTECH. REPORT	PIER & GRADE BEAM (SEE REPORT)

WIND AND EARTHQUAKE DESIGN DATA
PURSUANT TO 2019 CBC SECTIONS 1603.1.4 AND 1603.1.5

BASIC WIND SPEED:	110 MPH
WIND EXPOSURE:	'B'
RISK CATEGORY	I I
SEISMIC IMPORTANCE FACTOR	1.0
Ss	2.447
S1	0.888
SITE CLASS	D
Sds	1.458
SITE DESIGN CATEGORY	D
DESIGN BASE SHEAR BEDROOM ADD.	24,300 LBS
MUSIC / SHOP	12,850 LBS
CABANA	6,100 LBS
Cs	0.30
R	6.5
ANALYSIS PROCEDURE USED.	ASD

BASIC SEISMIC FORCE-RESISTING SYSTEM: LIGHT FRAMED WALLS SHEATHED WITH WOOD STRUCTURAL PANELS

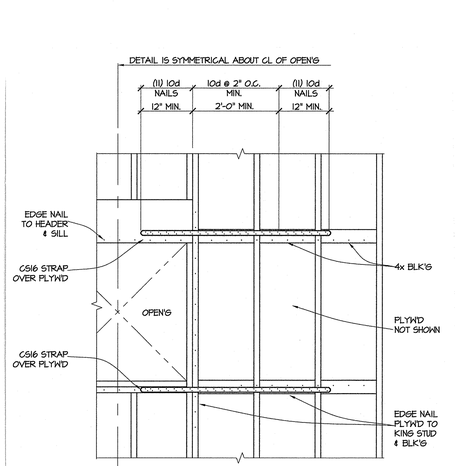

1 REINFORCED OPEN'G

Michael Helm, AIA Architect & Associates
200 Seventh Avenue, #110 Santa Cruz, California 95062 (831) 476-5386

GRReynolds & Associates
STRUCTURAL ENGINEERS
831 426 3837
111 Youngdale Avenue
Santa Cruz, CA 95060

REMODEL & ADDITIONS TO THE:
RENFREW RESIDENCE
14500 ARNERICH HILL ROAD – APN 537-12-012
LOS GATOS, CALIFORNIA

STRUCTURAL SPECIFICATIONS & NOTES

11.14.22
NTS
MSH GR
2108/2221

25

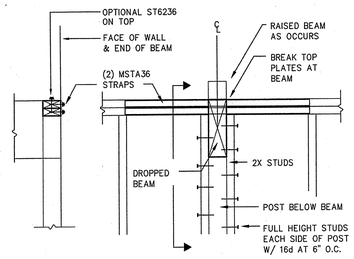

14 — TYPICAL TOP PLATE SPLICE AT BEAM CONNECTION

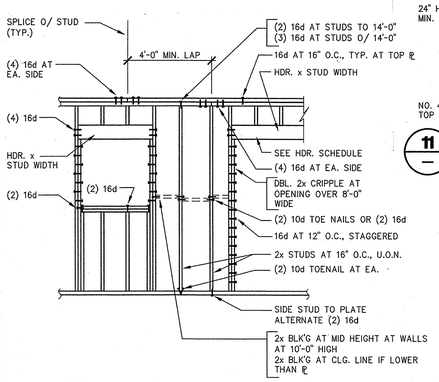

15 — TYPICAL STUD WALL DETAIL

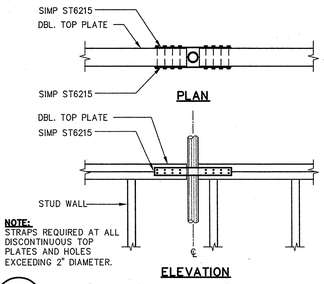

NOTE:
STRAPS REQUIRED AT ALL DISCONTINUOUS TOP PLATES AND HOLES EXCEEDING 2" DIAMETER.

10 — TYPICAL TOP PLATE STRAPS

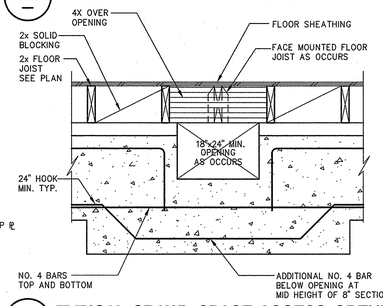

11 — TYPICAL CRAWL SPACE ACCESS OPENING

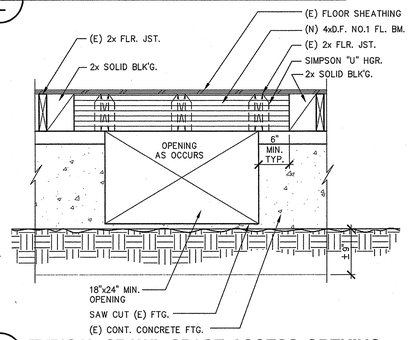

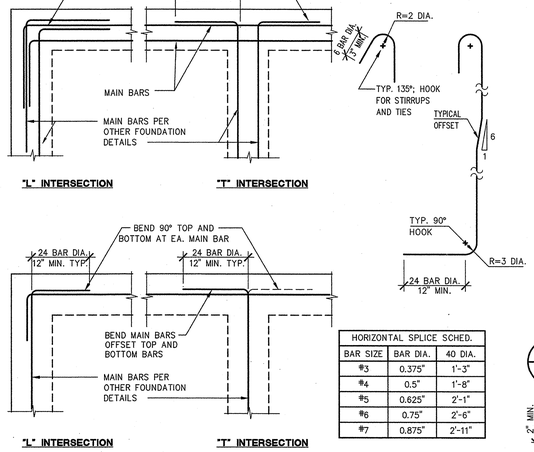

HORIZONTAL SPLICE SCHED.		
BAR SIZE	BAR DIA.	40 DIA.
#3	0.375"	1'-3"
#4	0.5"	1'-8"
#5	0.625"	2'-1"
#6	0.75"	2'-6"
#7	0.875"	2'-11"

7 — TYP. HORIZONTAL CONCRETE REINFORCEMENT

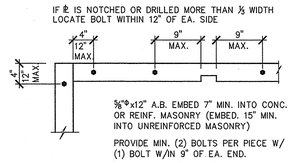

⅝"Ø x12" A.B. EMBED 7" MIN. INTO CONC. OR REINF. MASONRY (EMBED. 15" MIN. INTO UNREINFORCED MASONRY)

PROVIDE MIN. (2) BOLTS PER PIECE W/ (1) BOLT W/IN 9" OF EA. END.

SPACE A.B.'s AT 48" O.C. FOR ONE STORY AND 48" O.C. AT TWO STORY BUILDING AREAS.

A NUT AND 3"x3"x¼" STL. PLATE WASHER ON EA. BOLT

MUDSILL SHALL BE 3x P.T.D.F. No. 1 (U.O.N.)

8 — SILL PLATE DETAIL

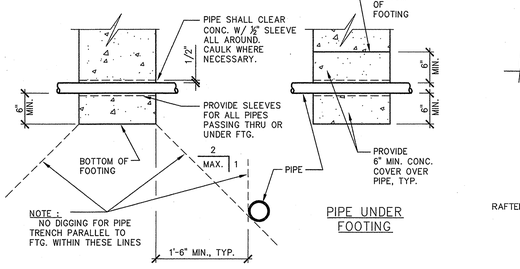

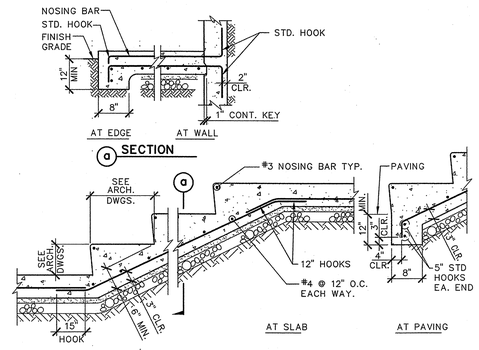

4 — SLAB ON GRADE

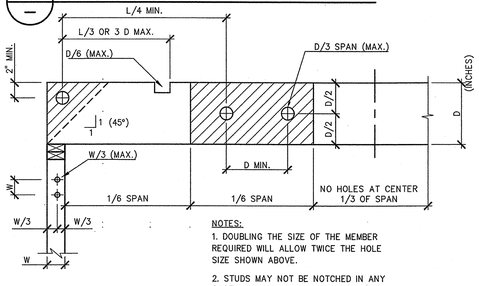

NOTES:
1. DOUBLING THE SIZE OF THE MEMBER REQUIRED WILL ALLOW TWICE THE HOLE SIZE SHOWN ABOVE.
2. STUDS MAY NOT BE NOTCHED IN ANY CASE.

5 — HOLES & NOTCHES AT JOIST & STUD

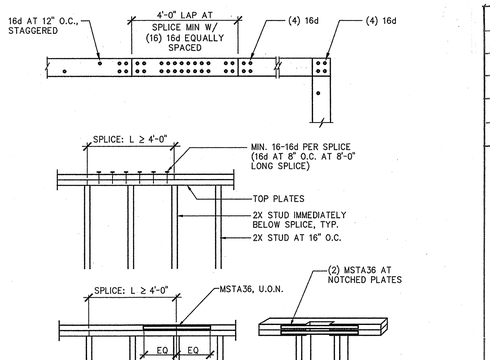

1 — TYPICAL TOP PLATE SPLICE

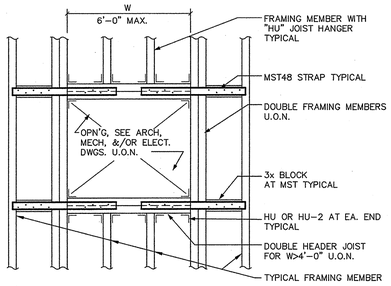

2 — OPENING IN FRAME AROUND HORIZ. DIAPHRAGM SEE PLAN FOR LOCATION

1.55E TIMBERSTRAND® LSL HEADERS AND BEAMS

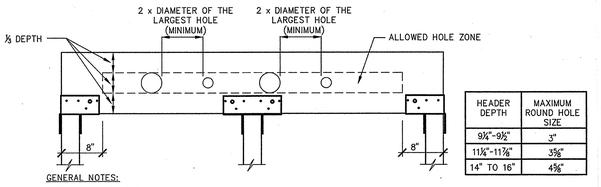

HEADER DEPTH	MAXIMUM ROUND HOLE SIZE
9¼"-9½"	3"
11⅞"-11⅞"	3⅝"
14" TO 16"	4⅝"

GENERAL NOTES:
No rectangular holes
No holes in headers or beams in plank orientation

SEE ILLUSTRATION FOR ALLOWED HOLE ZONE

PSL AND LVL BEAMS

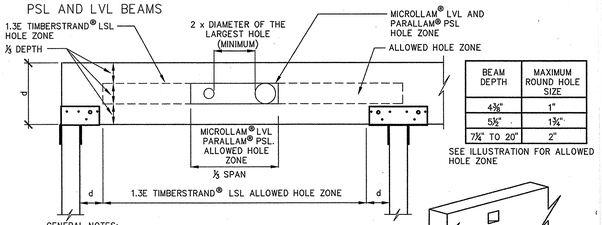

BEAM DEPTH	MAXIMUM ROUND HOLE SIZE
4⅜"	1"
5¼"	1¾"
7¼" TO 20"	2"

SEE ILLUSTRATION FOR ALLOWED HOLE ZONE

GENERAL NOTES:
Allowed hole zone suitable for uniformly loaded headers and beams only.
No rectangular holes
No holes in cantilevers.
No holes in headers or beams in plank orientation

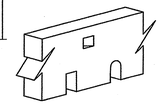

DO NOT cut, notch, or drill holes in headers except as indicated in the illustrations and tables above.

3 — ALLOWABLE HOLES

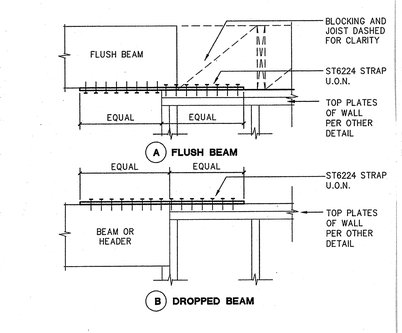

16 — TYPICAL SHEAR COLLECTOR STRAP

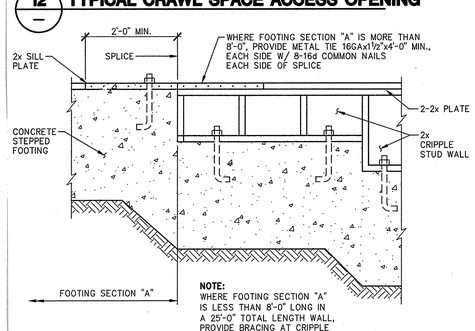

13 — STEPPED FOOTING CONNECTION

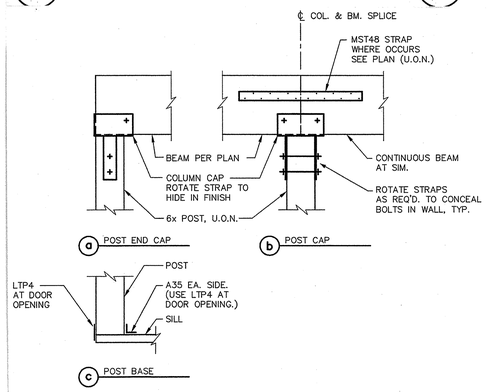

21 — BEAM AND POST CONNECTION

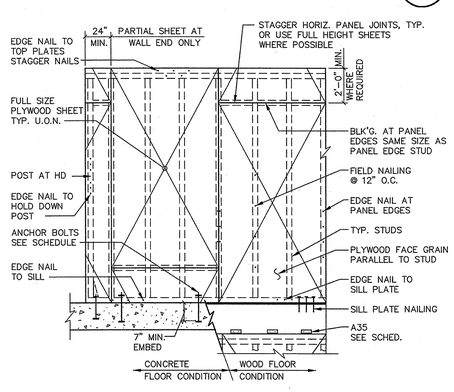

22 — SHEAR WALL FRAMING ELEVATION

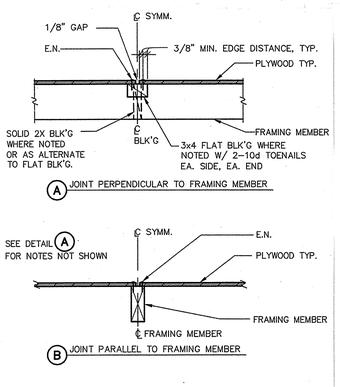

9 — PIPE THRU FTG. AND PARALLEL TO FTG.

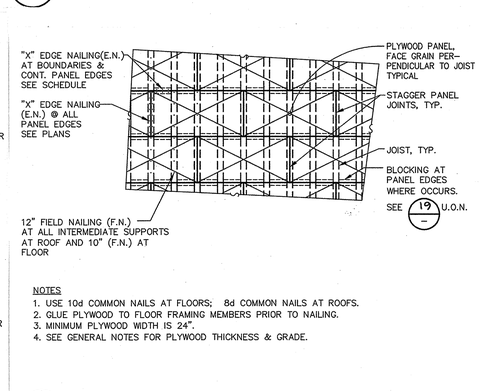

NOTES
1. USE 10d COMMON NAILS AT FLOORS; 8d COMMON NAILS AT ROOFS.
2. GLUE PLYWOOD TO FLOOR FRAMING MEMBERS PRIOR TO NAILING.
3. MINIMUM PLYWOOD WIDTH IS 24".
4. SEE GENERAL NOTES FOR PLYWOOD THICKNESS & GRADE.

6 — TYPICAL CALIFORNIA FRAMING

18 — PLYWOOD SHEATHING AT ROOF AND FLOORS REQUIRING SPECIAL BLOCKING AND EDGE NAIL SEE PLAN FOR LOCATION

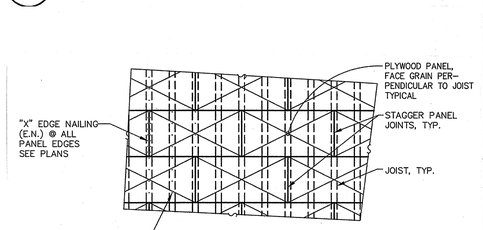

NOTES
1. USE 10d COMMON NAILS AT FLOORS; 8d COMMON NAILS AT ROOFS.
2. GLUE PLYWOOD TO FLOOR FRAMING MEMBERS PRIOR TO NAILING.
3. MINIMUM PLYWOOD WIDTH IS 24".
4. SEE GENERAL NOTES FOR PLYWOOD THICKNESS & GRADE.

17 — PLYWOOD SHEATHING AT ROOF AND FLOORS UNBLOCKED

Michael Helm, AIA Architect & Associates
200 Seventh Avenue, #110 Santa Cruz, California 95062 (831) 476-5386

REMODEL & ADDITIONS TO THE:
RENFREW RESIDENCE
14500 ARNERICH HILL ROAD—APN 537-12-012
LOS GATOS, CALIFORNIA

CONSTRUCTION DETAILS

11.14.22
AS NOTED
MSH
2108

CERTIFICATE OF COMPLIANCE — CF1R-PRF-01E (Page 5 of 10)

Project Name: Renfrew Residence
Calculation Description: Title 24 Analysis
Calculation Date/Time: 2022-09-06T15:09:07-07:00
Input File Name: 22-570 Renfrew E+A+A.ribd19c

OPAQUE SURFACE CONSTRUCTIONS

01 Construction Name	02 Surface Type	03 Construction Type	04 Framing	05 Total Cavity R-value	05 Interior / Exterior Continuous R-value	06 U-factor	08 Assembly Layers
R-11 Wall	Exterior Walls	Wood Framed Wall	2x4 @ 16 in. O.C.	R-11	None / None	0.103	Inside Finish: Gypsum Board Cavity / Frame: R-11 / 2x4 Exterior Finish: Wood Siding/sheathing/decking
R-23 Wall	Exterior Walls	Wood Framed Wall	2x6 @ 16 in. O.C.	R-23	None / None	0.066	Inside Finish: Gypsum Board Cavity / Frame: R-23 / 2x6 Exterior Finish: All Other Siding
R-19 Roof	Cathedral Ceilings	Wood Framed Ceiling	2x8 @ 16 in. O.C.	R-19	None / None	0.053	Roofing: 15 PSF (Heavy Ballast or Pavers) Roof Deck: Wood Siding/sheathing/decking Cavity / Frame: R-19 / 2x8 Inside Finish: Gypsum Board
R-30 Roof	Cathedral Ceilings	Wood Framed Ceiling	2x10 @ 16 in. O.C.	R-30	None / None	0.037	Roofing: 15 PSF (Heavy Ballast or Pavers) Roof Deck: Wood Siding/sheathing/decking Cavity / Frame: R-30 / 2x10 Inside Finish: Gypsum Board
R-19 Floor Crawlspace	Floors Over Crawlspace	Wood Framed Floor	2x8 @ 16 in. O.C.	R-19	None / None	0.047	Floor Surface: Carpeted Floor Deck: Wood Siding/sheathing/decking Cavity / Frame: R-19 / 2x8
R-19 Floor No Crawlspace	Interior Floors	Wood Framed Floor	2x8 @ 16 in. O.C.	R-19	None / None	0.046	Floor Surface: Carpeted Floor Deck: Wood Siding/sheathing/decking Cavity / Frame: R-19 / 2x8 Ceiling Below Finish: Gypsum Board

Registration Number: 222-P01100337A-000-000-0000000-0000
Registration Date/Time: 2022-10-14 10:49:25
HERS Provider: CalCERTS Inc.
CA Building Energy Efficiency Standards - 2019 Residential Compliance
Report Version: 2019.2.000
Schema Version: rev 20200901
Report Generated: 2022-09-06 15:02:01

CERTIFICATE OF COMPLIANCE — CF1R-PRF-01E (Page 4 of 10)

Project Name: Renfrew Residence
Calculation Description: Title 24 Analysis
Calculation Date/Time: 2022-09-06T15:09:07-07:00
Input File Name: 22-570 Renfrew E+A+A.ribd19c

OPAQUE SURFACES - CATHEDRAL CEILINGS

01 Name	02 Zone	03 Construction	04 Azimuth	05 Orientation	06 Area (ft²)	07 Skylight Area (ft²)	08 Roof Rise (x In 12)	09 Roof Reflectance	10 Roof Emittance	11 Cool Roof	12 Status	13 Verified Existing Condition	14 Existing Construction
Roof	Addition Only	R-30 Roof	0	n/a	1225.1	0	5	0.1	0.85	No	New	n/a	

FENESTRATION / GLAZING

01 Name	02 Type	03 Surface	04 Orientation	05 Azimuth	06 Width (ft)	07 Height (ft)	08 Mult.	09 Area (ft²)	10 U-factor	11 U-factor Source	12 SHGC	13 SHGC Source	14 Exterior Shading	15 Status	16 Verified Existing Condition
FG/A	Window	FWall/E	Front	8			1	216.2	0.32	NFRC	0.26	NFRC	Bug Screen	Altered	No
LG/A	Window	LWall/E	Left	98			1	220.3	0.32	NFRC	0.26	NFRC	Bug Screen	Altered	No
BG/A	Window	BWall/E	Back	188			1	298.8	0.32	NFRC	0.26	NFRC	Bug Screen	Altered	No
BG/N	Window	BWall/E	Back	188			1	104.9	0.32	NFRC	0.26	NFRC	Bug Screen	New	n/a
RG/A	Window	RWall/E	Right	278			1	162.9	0.32	NFRC	0.26	NFRC	Bug Screen	Altered	No
RG/N	Window	RWall/E	Right	278			1	16	0.32	NFRC	0.26	NFRC	Bug Screen	New	n/a
LG	Window	LWall	Left	98			1	87.5	0.32	NFRC	0.26	NFRC	Bug Screen	New	n/a
BG	Window	RWall	Right	278			1	186.3	0.32	NFRC	0.26	NFRC	Bug Screen	New	n/a

SLAB FLOORS

01 Name	02 Zone	03 Area (ft²)	04 Perimeter (ft)	05 Edge Insul. R-value and Depth	06 Edge Insul. R-value and Depth	07 Carpeted Fraction	08 Heated	09 Status	10 Verified Existing Condition
Slab-on-Grade/E	Existing House	1452	171.5	none	0	80%	No	Existing	No

Registration Number: 222-P01100337A-000-000-0000000-0000
Registration Date/Time: 2022-10-14 10:49:25
HERS Provider: CalCERTS Inc.
CA Building Energy Efficiency Standards - 2019 Residential Compliance
Report Version: 2019.2.000
Schema Version: rev 20200901
Report Generated: 2022-09-06 15:02:01

CERTIFICATE OF COMPLIANCE — CF1R-PRF-01E (Page 3 of 10)

Project Name: Renfrew Residence
Calculation Description: Title 24 Analysis
Calculation Date/Time: 2022-09-06T15:09:07-07:00
Input File Name: 22-570 Renfrew E+A+A.ribd19c

ZONE INFORMATION

01 Zone Name	02 Zone Type	03 HVAC System Name	04 Zone Floor Area (ft²)	05 Avg. Ceiling Height	06 Water Heating System 1	07 Water Heating System 2
Existing House	Conditioned	Ducted Heatpumps1	5272	10.63	DHW Sys 1	N/A
Addition Only	Conditioned	Ductless Heatpumps2	1129	9.75	DHW Sys 1	N/A

OPAQUE SURFACES

01 Name	02 Zone	03 Construction	04 Azimuth	05 Orientation	06 Gross Area (ft²)	07 Window and Door Area (ft2)	08 Tilt (deg)	09 Wall Exceptions	10 Status	11 Verified Existing Condition
FWall/E	Existing House	R-11 Wall	8	Front	1210.8	216.2	90	none	Existing	No
LWall/E	Existing House	R-11 Wall	98	Left	1534.5	220.3	90	none	Existing	No
BWall/E	Existing House	R-11 Wall	188	Back	1230.8	398.1	90	none	Existing	No
RWall/E	Existing House	R-11 Wall	278	Right	1534.5	178.9	90	none	Existing	No
FWall	Addition Only	R-23 Wall	8	Front	234	0	90	none	New	n/a
LWall	Addition Only	R-23 Wall	98	Left	462.6	87.5	90	none	New	n/a
BWall	Addition Only	R-23 Wall	188	Back	234	0	90	none	New	n/a
RWall	Addition Only	R-23 Wall	278	Right	462.6	186.3	90	none	New	n/a
Raised Floor/E	Existing House	R-19 Floor Over Crawlspace	n/a	n/a	2561	n/a	n/a		Existing	No
Partition Floor	Addition Only	R-19 Floor No Crawlspace	n/a	n/a	1129	n/a	n/a		New	n/a

OPAQUE SURFACES - CATHEDRAL CEILINGS

01 Name	02 Zone	03 Construction	04 Azimuth	05 Orientation	06 Area (ft²)	07 Skylight Area (ft²)	08 Roof Rise (x In 12)	09 Roof Reflectance	10 Roof Emittance	11 Cool Roof	12 Status	13 Verified Existing Condition	14 Existing Construction
Roof/E	Existing House	R-19 Roof	0	n/a	3129.5	0	5	0.1	0.85	No	Existing	No	

Registration Number: 222-P01100337A-000-000-0000000-0000
Registration Date/Time: 2022-09-06T15:09:07-07:00
HERS Provider: CalCERTS Inc.
CA Building Energy Efficiency Standards - 2019 Residential Compliance
Report Version: 2019.2.000
Schema Version: rev 20200901
Report Generated: 2022-09-06 15:02:01

CERTIFICATE OF COMPLIANCE — CF1R-PRF-01E (Page 2 of 10)

Project Name: Renfrew Residence
Calculation Description: Title 24 Analysis
Calculation Date/Time: 2022-09-06T15:09:07-07:00
Input File Name: 22-570 Renfrew E+A+A.ribd19c

REQUIRED SPECIAL FEATURES

The following are features that must be installed as condition for meeting the modeled energy performance for this computer analysis.

- Ducts in crawl space
- Variable capacity heat pump compliance option (verification details from VCHP Staff report, Appendix B, and RA3)
- Recirculating with non-demand control (continuous pumping)

HERS FEATURE SUMMARY

The following is a summary of the features that must be field-verified by a certified HERS Rater as a condition for meeting the modeled energy performance for this computer analysis. Additional detail is provided in the building tables below. Registered CF2Rs and CF3Rs are required to be completed in the HERS Registry

Building-level Verifications:
- Indoor air quality ventilation

Cooling System Verifications:
- Minimum Airflow
- Verified SEER
- Verified Refrigerant Charge
- Airflow in habitable rooms (ECS.1.4.1.7)
- Fan Efficacy Watts/CFM

Heating System Verifications:
- Verified HSPF
- Verified heat pump rated heating capacity
- Wall-mounted thermostat in zones greater than 150 ft2 (RA3.4.5)
- Ductless indoor units located entirely in conditioned space (RA3.1.4.1.8)

HVAC Distribution System Verifications:
- Duct leakage testing

Domestic Hot Water System Verifications:
- -- None --

BUILDING - FEATURES INFORMATION

01 Project Name	02 Conditioned Floor Area (ft²)	03 Number of Dwelling Units	04 Number of Bedrooms	05 Number of Zones	06 Number of Ventilation Cooling Systems	07 Number of Water Heating Systems
Renfrew Residence	6401	1	5	2	0	1

Registration Number: 222-P01100337A-000-000-0000000-0000
Registration Date/Time: 2022-10-14 10:49:25
HERS Provider: CalCERTS Inc.
CA Building Energy Efficiency Standards - 2019 Residential Compliance
Report Version: 2019.2.000
Schema Version: rev 20200901
Report Generated: 2022-09-06 15:02:01

CERTIFICATE OF COMPLIANCE — CF1R-PRF-01E (Page 1 of 10)

Project Name: Renfrew Residence
Calculation Description: Title 24 Analysis
Calculation Date/Time: 2022-09-06T15:09:07-07:00
Input File Name: 22-570 Renfrew E+A+A.ribd19c

GENERAL INFORMATION

01	Project Name	Renfrew Residence	
02	Run Title	Title 24 Analysis	
03	Project Location	14500 Arnerich Hill Road	
04	City	Los Gatos	05 Standards Version: 2019
06	Zip code	95032	07 Software Version: EnergyPro 8.3
08	Climate Zone	4	09 Front Orientation (deg/ Cardinal): 8
10	Building Type	Single family	11 Number of Dwelling Units: 1
12	Project Scope	Addition/Alteration	13 Number of Bedrooms: 5
14	Addition Cond. Floor Area (ft²):	1129	15 Number of Stories: 1
16	Existing Cond. Floor Area (ft²):	5272	17 Fenestration Average U-factor: 0.32
18	Total Cond. Floor Area (ft²):	6401	19 Glazing Percentage (%): 20.11%
20	ADU Bedroom Count:	n/a	21 ADU Conditioned Floor Area: n/a
22	Is Natural Gas Available?	No	

COMPLIANCE RESULTS

01	Building Complies with Computer Performance
02	This building incorporates features that require field testing and/or verification by a certified HERS rater under the supervision of a CEC-approved HERS provider.
03	This building incorporates one or more Special Features shown below

ENERGY USE SUMMARY

Energy Use (kTDV/ft²-yr)	Standard Design	Proposed Design	Compliance Margin	Percent Improvement
Space Heating	49.45	30.39	19.06	38.5
Space Cooling	14.94	11.44	3.5	23.4
IAQ Ventilation	2.67	2.67	0	0
Water Heating	40.19	40.2	-0.01	0
Self Utilization/Flexibility Credit	n/a	0	0	n/a
Compliance Energy Total	107.25	84.7	22.55	21

Registration Number: 222-P01100337A-000-000-0000000-0000
Registration Date/Time: 2022-10-14 10:49:25
HERS Provider: CalCERTS Inc.
CA Building Energy Efficiency Standards - 2019 Residential Compliance
Report Version: 2019.2.000
Schema Version: rev 20200901
Report Generated: 2022-09-06 15:02:01

CERTIFICATE OF COMPLIANCE — CF1R-PRF-01E (Page 10 of 10)

Project Name: Renfrew Residence
Calculation Description: Title 24 Analysis
Calculation Date/Time: 2022-09-06T15:09:07-07:00
Input File Name: 22-570 Renfrew E+A+A.ribd19c

DOCUMENTATION AUTHOR'S DECLARATION STATEMENT

I, I certify that this Certificate of Compliance documentation is accurate and complete.

Documentation Author Name: Michael Hafner	Documentation Author Signature: Michael Hafner
Company: Monterey Energy Group	Signature Date: 2022-10-14 10:49:25
Address: 26465 Carmel Rancho Blvd. #8	CEA/ HERS Certification Identification (if applicable): R16-18-20117
City/State/Zip: Carmel, CA 93923	Phone: 831-372-8328

RESPONSIBLE PERSON'S DECLARATION STATEMENT

I certify the following under penalty of perjury, under the laws of the State of California:
1. I am eligible under Division 3 of the Business and Professions Code to accept responsibility for the building design identified on this Certificate of Compliance.
2. I certify that the energy features and performance specifications identified on this Certificate of Compliance conform to the requirements of Title 24, Part 1 and Part 6 of the California Code of Regulations.
3. The building design features or system design features identified on this Certificate of Compliance are consistent with the information provided on other applicable compliance documents, worksheets, calculations, plans and specifications submitted to the enforcement agency for approval with this building permit application.

Responsible Designer Name: Michael Hafner	Responsible Designer Signature: Michael Hafner
Company: Monterey Energy Group	Date Signed: 2022-10-14 10:49:25
Address: 26465 Carmel Rancho Blvd. #8	License: R16-18-20117
City/State/Zip: Carmel, CA 93923	Phone: 831-372-8328

Digitally signed by CalCERTS. This digital signature is provided in order to secure the content of this registered document, and in no way implies Registration Provider responsibility for the accuracy of the information.

Easy to Verify at CalCERTS.com

Registration Number: 222-P01100337A-000-000-0000000-0000
Registration Date/Time: 2022-10-14 10:49:25
HERS Provider: CalCERTS Inc.
CA Building Energy Efficiency Standards - 2019 Residential Compliance
Report Version: 2019.2.000
Schema Version: rev 20200901
Report Generated: 2022-09-06 15:02:01

CERTIFICATE OF COMPLIANCE — CF1R-PRF-01E (Page 9 of 10)

Project Name: Renfrew Residence
Calculation Description: Title 24 Analysis
Calculation Date/Time: 2022-09-06T15:09:07-07:00
Input File Name: 22-570 Renfrew E+A+A.ribd19c

HVAC DISTRIBUTION - HERS VERIFICATION

01 Name	02 Duct Leakage Verification	03 Duct Leakage Target (%)	04 Verified Duct Location	05 Verified Duct Design	06 Buried Ducts	07 Deeply Buried Ducts	08 Low-leakage Air Handler	09 Low Leakage Ducts Entirely in Conditioned Space
Air Distribution System 1-hers-dist	Yes	5.0	Not Required	Not Required	Not Required	Credit not taken	Not Required	No

HVAC - FAN SYSTEMS

01	02	03 Fan Power (Watts/CFM)	04 Name
HVAC Fan 1	HVAC Fan	0.58	HVAC Fan 1-hers-fan

HVAC FAN SYSTEMS - HERS VERIFICATION

01 Name	02 Verified Fan Watt Draw	03 Required Fan Efficacy (Watts/CFM)
HVAC Fan 1-hers-fan	Required	0.58

IAQ (INDOOR AIR QUALITY) FANS

01 Dwelling Unit	02 IAQ CFM	03 IAQ Watts/CFM	04 IAQ Fan Type	05 IAQ Recovery Effectiveness - SRE	06 IAQ Recovery Effectiveness - ASRE	07 HERS Verification
Sfam IAQVentRpt	201	0.35	Exhaust	n/a	n/a	Yes

HERS RATER VERIFICATION OF EXISTING CONDITIONS

Registration Number: 222-P01100337A-000-000-0000000-0000
Registration Date/Time: 2022-10-14 10:49:25
HERS Provider: CalCERTS Inc.
CA Building Energy Efficiency Standards - 2019 Residential Compliance
Report Version: 2019.2.000
Schema Version: rev 20200901
Report Generated: 2022-09-06 15:02:01

CERTIFICATE OF COMPLIANCE — CF1R-PRF-01E (Page 8 of 10)

Project Name: Renfrew Residence
Calculation Description: Title 24 Analysis
Calculation Date/Time: 2022-09-06T15:09:07-07:00
Input File Name: 22-570 Renfrew E+A+A.ribd19c

HVAC HEAT PUMPS - HERS VERIFICATION

01 Name	02 Verified Airflow	03 Airflow Target	04 Verified EER	05 Verified SEER	06 Verified Refrigerant Charge	07 Verified HSPF	08 Verified Heating Cap 47	09 Verified Heating Cap 17
Heat Pump System 1-hers-hpump	Not Required	0	Not Required	Not Required	Yes	Yes	Yes	Yes
Heat Pump System 2-hers-hpump	Not Required	0	Not Required	Not Required	Yes	Yes	Yes	Yes

VARIABLE CAPACITY HEAT PUMP COMPLIANCE OPTION - HERS VERIFICATION

01 Name	02 Certified Low-Static VCHP System	03 Airflow to Habitable Rooms	04 Ductless Units in Conditioned Space	05 Wall Mount Thermostat	06 Air Filter Sizing & Pressure Drop Rating	07 Low Leakage Ducts in Conditioned Space	08 Minimum Airflow per RA3.3 and NCS.3.3.4.1	09 Certified non-continuous Fan	10 Indoor Fan not Running Continuously
Heat Pump System 1	Not required	Required	Required	Required	Not required	Not required	Not required	Not required	Not required

HVAC - DISTRIBUTION SYSTEMS

01 Name	02 Type	03 Design Type	04 Supply	05 Return	06 Supply	07 Return	08 Supply	09 Return	10 Bypass Duct	11 Duct Leakage	12 HERS Verification	13 Status	14 Verified Existing Condition	15 Existing Distribution system	16 New Ducts 40 ft
			Duct loc. & value		Duct Location		Surface Area								
Air Distribution System 1	Unconditioned crawl space	Non-Verified	R-8	R-8	Crawl Space	Crawl Space	n/a	n/a	No Bypass Duct	Sealed and Tested	Air Distribution System 1-hers-dist	Altered	No	n/a	n/a

Registration Number: 222-P01100337A-000-000-0000000-0000
Registration Date/Time: 2022-10-14 10:49:25
HERS Provider: CalCERTS Inc.
CA Building Energy Efficiency Standards - 2019 Residential Compliance
Report Version: 2019.2.000
Schema Version: rev 20200901
Report Generated: 2022-09-06 15:02:01

CERTIFICATE OF COMPLIANCE — CF1R-PRF-01E (Page 7 of 10)

Project Name: Renfrew Residence
Calculation Description: Title 24 Analysis
Calculation Date/Time: 2022-09-06T15:09:07-07:00
Input File Name: 22-570 Renfrew E+A+A.ribd19c

WATER HEATING - HERS VERIFICATION

01 Name	02 Pipe Insulation	03 Parallel Piping	04 Compact Distribution	05 Compact Distribution Type	06 Recirculation Control	07 Central DHW Distribution	08 Shower Drain Water Heat Recovery
DHW Sys 1 - 1/2	Not Required	Not Required	Not Required	None	Not Required	Not Required	Not Required

SPACE CONDITIONING SYSTEMS

01 Name	02 System Type	03 Heating Unit Name	04 Cooling Unit Name	05 Fan Name	06 Distribution Name	07 Required Thermostat Type	08 Status	09 Verified Existing Condition	10 Heating Equipment Count	11 Cooling Equipment Count
Ducted Heatpumps1	Heat pump heating cooling	Heat Pump System 1	Heat Pump System 1	n/a	n/a	Setback	New	NA	2	2
Ductless Heatpumps2	Heat pump heating cooling	Heat Pump System 2	Heat Pump System 2	n/a	n/a	Setback	New	NA	3	3

HVAC - HEAT PUMPS

01 Name	02 System Type	03 Number of Units	04 Heating HSPF/COP	05 Heating Cap 47	06 Heating Cap 17	07 Cooling SEER	08 Cooling EER/CEER	09 Zonally Controlled	10 Compressor Type	11 HERS Verification
Heat Pump System 1	VCHP-ductless	2	8.5	27000	23580	14	10	Not Zonal	Single Speed	Heat Pump System 1-hers-hpump

HVAC HEAT PUMPS - HERS VERIFICATION

01 Name	02 Verified Airflow	03 Airflow Target	04 Verified EER	05 Verified SEER	06 Verified Refrigerant Charge	07 Verified HSPF	08 Verified Heating Cap 47	09 Verified Heating Cap 17
Heat Pump System 1-hers-hpump	Not Required	0	Not Required	Not Required	Yes	Yes	Yes	Yes

VARIABLE CAPACITY HEAT PUMP COMPLIANCE OPTION - HERS VERIFICATION

01 Name	02 Certified Low-Static VCHP System	03 Airflow to Habitable Rooms	04 Ductless Units in Conditioned Space	05 Wall Mount Thermostat	06 Air Filter Sizing & Pressure Drop Rating	07 Low Leakage Ducts in Conditioned Space	08 Minimum Airflow per RA3.3 and NCS.3.3.4.1	09 Certified non-continuous Fan	10 Indoor Fan not Running Continuously
Heat Pump System 1	Not required	Required	Required	Required	Not required	Not required	Not required	Not required	Not required

Registration Number: 222-P01100337A-000-000-0000000-0000
Registration Date/Time: 2022-10-14 10:49:25
HERS Provider: CalCERTS Inc.
CA Building Energy Efficiency Standards - 2019 Residential Compliance
Report Version: 2019.2.000
Schema Version: rev 20200901
Report Generated: 2022-09-06 15:02:01

CERTIFICATE OF COMPLIANCE — CF1R-PRF-01E (Page 6 of 10)

Project Name: Renfrew Residence
Calculation Description: Title 24 Analysis
Calculation Date/Time: 2022-09-06T15:09:07-07:00
Input File Name: 22-570 Renfrew E+A+A.ribd19c

BUILDING ENVELOPE - HERS VERIFICATION

01 Quality Insulation Installation (QII)	02 High R-value Spray Foam Insulation	03 Building Envelope Air Leakage	04 CFM50
Required	Not Required	Not Required	n/a

WATER HEATING SYSTEMS

01 Name	02 System Type	03 Distribution Type	04 Water Heater Name (#)	05 Solar Heating System	06 Compact Distribution	07 HERS Verification
DHW Sys 1	Domestic Hot Water (DHW)	Standard Distribution System	DHW Heater 1 (1)	n/a	None	n/a

WATER HEATERS

01 Name	02 Heating Element Type	03 Tank Type	04 # of Units	05 Tank Vol. (gal)	06 Energy Factor or Efficiency	07 Input Rating or Pilot	08 Tank Insulation R-value (hr/Btu)	09 Standby Loss or Recovery Eff	10 1st Hr. Rating or Flow Rate	11 NEEA Heat Pump Brand or Model	12 Tank Location or Ambient Condition	13 Status	14 Verified Existing Condition
DHW Heater 1	Heat Pump	n/a	1	50	NEEA Rated	<= 12 kW	n/a	n/a	n/a	Rheem/PROHBD T2 RH37515 (50 gal)	Garage	New	n/a

WATER HEATING - HERS VERIFICATION

01 Name	02 Pipe Insulation	03 Parallel Piping	04 Compact Distribution	05 Compact Distribution Type	06 Recirculation Control	07 Central DHW Distribution	08 Shower Drain Water Heat Recovery
DHW Sys 1 - 1/1	Not Required	Not Required	Not Required	None	Not Required	Not Required	Not Required

Registration Number: 222-P01100337A-000-000-0000000-0000
Registration Date/Time: 2022-10-14 10:49:25
HERS Provider: CalCERTS Inc.
CA Building Energy Efficiency Standards - 2019 Residential Compliance
Report Version: 2019.2.000
Schema Version: rev 20200901
Report Generated: 2022-09-06 15:02:01

CERTIFICATE OF COMPLIANCE — CF1R-PRF-01E (Page 1 of 10)

Project Name: Renfrew Residence
Calculation Description: Title 24 Analysis
Calculation Date/Time: 2022-09-06T15:09:07-07:00
Input File Name: 22-570 Renfrew E+A+A.ribd19c

GENERAL INFORMATION

01	Project Name	Renfrew Residence	
02	Run Title	Title 24 Analysis	
03	Project Location	14500 Arnerich Hill Road	
04	City	Los Gatos	05 Standards Version: 2019
06	Zip code	95032	07 Software Version: EnergyPro 8.3
08	Climate Zone	4	09 Front Orientation (deg/ Cardinal): 8
10	Building Type	Single family	11 Number of Dwelling Units: 1
12	Project Scope	Addition/Alteration	13 Number of Bedrooms: 5
14	Addition Cond. Floor Area (ft²):	1129	15 Number of Stories: 1
16	Existing Cond. Floor Area (ft²):	5272	17 Fenestration Average U-factor: 0.32
18	Total Cond. Floor Area (ft²):	6401	19 Glazing Percentage (%): 20.11%
20	ADU Bedroom Count:	n/a	21 ADU Conditioned Floor Area: n/a
22	Is Natural Gas Available?	No	

COMPLIANCE RESULTS

01	Building Complies with Computer Performance
02	This building incorporates features that require field testing and/or verification by a certified HERS rater under the supervision of a CEC-approved HERS provider.
03	This building incorporates one or more Special Features shown below

ENERGY USE SUMMARY

Energy Use (kTDV/ft²-yr)	Standard Design	Proposed Design	Compliance Margin	Percent Improvement
Space Heating	49.45	30.39	19.06	38.5
Space Cooling	14.94	11.44	3.5	23.4
IAQ Ventilation	2.67	2.67	0	0
Water Heating	40.19	40.2	-0.01	0
Self Utilization/Flexibility Credit	n/a	0	0	n/a
Compliance Energy Total	107.25	84.7	22.55	21

Registration Number: 222-P01100337A-000-000-0000000-0000
Registration Date/Time: 2022-10-14 10:49:25
HERS Provider: CalCERTS Inc.
CA Building Energy Efficiency Standards - 2019 Residential Compliance
Report Version: 2019.2.000
Schema Version: rev 20200901
Report Generated: 2022-09-06 15:02:01

MAIN RESIDENCE
ENERGY COMPLIANCE

CERTIFICATE OF COMPLIANCE — CF1R-PRF-01E (Page 4 of 8)

Project Name: Renfrew Music Room Addition
Calculation Description: Title 24 Analysis
Calculation Date/Time: 2022-10-14T10:46:58-07:00
Input File Name: 22-571 Renfrew Music Room Add..ribd19x

ATTIC

01 Name	02 Construction Type	03 Roof Rise (x In 12)	04 Roof Reflectance	05 Roof Emittance	06 Radiant Barrier	07 Cool Roof
Attic _Garage_	Attic Garage Roof Cons	Ventilated	5	0.1	0.85	No

FENESTRATION / GLAZING

01 Name	02 Type	03 Surface	04 Orientation	05 Azimuth	06 Width (ft)	07 Height (ft)	08 Mult.	09 Area (ft²)	10 U-factor	11 U-factor Source	12 SHGC	13 SHGC Source	14 Exterior Shading
A/A	Window	FWall	Front	98	5	4.5	2	45	0.3	NFRC	0.24	NFRC	Bug Screen
S/A	Window	LWall	Left	188			1	55.8	0.3	NFRC	0.24	NFRC	Bug Screen
G/G/G	Window	BWall	Back	278	5.33	6.66	3	106.4 g	0.3	NFRC	0.24	NFRC	Bug Screen
B/B/C	Window	RWall	Right	8			1	24	0.3	NFRC	0.24	NFRC	Bug Screen

OVERHANGS AND FINS

01 Window	02 Overhang					03 Left Fin				04 Right Fin			
	Depth	Dist Up	Left Extent	Right Extent	Flap Ht.	Depth	Top Up	Dist L	Bot Up	Depth	Top Up	Dist R	Bot Up
A/A	2	1	0	0	0	0	0	0	0	0	0	0	0
G/G/G	2	1	0	0	0	0	0	0	0	0	0	0	0

SLAB FLOORS

01 Name	02 Zone	03 Area (ft²)	04 Perimeter (ft)	05 Edge Insul. R-value and Depth	06 Edge Insul. R-value and Depth	07 Carpeted Fraction	08 Heated
Slab-on-Grade/E	__Garage__	1821	185	none	0	0%	No

Registration Number: 222-P01100337A-000-000-0000000-0000
Registration Date/Time: 2022-10-14 10:46:20
HERS Provider: CalCERTS Inc.
CA Building Energy Efficiency Standards - 2019 Residential Compliance
Report Version: 2019.2.000
Schema Version: rev 20200901
Report Generated: 2022-10-14 10:39:48

CERTIFICATE OF COMPLIANCE — CF1R-PRF-01E (Page 3 of 8)

Project Name: Renfrew Music Room Addition
Calculation Description: Title 24 Analysis
Calculation Date/Time: 2022-10-14T10:46:58-07:00
Input File Name: 22-571 Renfrew Music Room Add..ribd19x

ZONE INFORMATION

01 Zone Name	02 Zone Type	03 HVAC System Name	04 Zone Floor Area (ft²)	05 Avg. Ceiling Height	06 Water Heating System 1	07 Water Heating System 2
Entire Music Room	Conditioned	Ductless Heatpumps1	700	10	DHW Sys 1	N/A

OPAQUE SURFACES

01 Name	02 Zone	03 Construction	04 Azimuth	05 Orientation	06 Gross Area (ft²)	07 Window and Door Area (ft2)	08 Tilt (deg)	09 Wall Exceptions	10 Status
FWall	Entire Music Room	R-23 Wall	98	Front	280	45	90	none	New
LWall	Entire Music Room	R-23 Wall	188	Left	200	55.8	90	none	New
BWall	Entire Music Room	R-23 Wall	278	Back	280	106.498	90	none	New
RWall	Entire Music Room	R-23 Wall	8	Right	200	24	90	none	New
Attic/E	__Garage__	R-0 Attic	n/a	n/a	1121	n/a	n/a		Existing
Partition Floor	Entire Music Room	R-19 Floor No Crawlspace	n/a	n/a	700	n/a	n/a		New
FWall/E	__Garage__	R-0 Garage Wall	98	Front	454	0	90	none	Existing
LWall/E	__Garage__	R-0 Garage Wall	188	Left	397	0	90	none	Existing
BWall/E	__Garage__	R-0 Garage Wall	278	Back	454	0	90	none	Existing
RWall/E	__Garage__	R-0 Garage Wall	8	Right	397	0	90	none	Existing

OPAQUE SURFACES - CATHEDRAL CEILINGS

01 Name	02 Zone	03 Construction	04 Azimuth	05 Orientation	06 Area (ft²)	07 Skylight Area (ft²)	08 Roof Rise (x In 12)	09 Roof Reflectance	10 Roof Emittance	11 Cool Roof
Roof	Entire Music Room	R-38 Roof	0	n/a	759.6	0	5	0.1	0.85	No

Registration Number: 222-P01100337A-000-000-0000000-0000
Registration Date/Time: 2022-10-14 10:46:20
HERS Provider: CalCERTS Inc.
CA Building Energy Efficiency Standards - 2019 Residential Compliance
Report Version: 2019.2.000
Schema Version: rev 20200901
Report Generated: 2022-10-14 10:39:48

CERTIFICATE OF COMPLIANCE — CF1R-PRF-01E (Page 2 of 8)

Project Name: Renfrew Music Room Addition
Calculation Description: Title 24 Analysis
Calculation Date/Time: 2022-10-14T10:46:58-07:00
Input File Name: 22-571 Renfrew Music Room Add..ribd19x

ENERGY USE SUMMARY

Energy Use (kTDV/ft²-yr)	Standard Design	Proposed Design	Compliance Margin	Percent Improvement
Space Heating	17.05	16.52	0.53	3.1
Space Cooling	16.9	23.51	-6.61	-39.1
IAQ Ventilation	0	0	0	
Water Heating	31.5	24.15	7.35	23.3
Self Utilization/Flexibility Credit	n/a	0	0	n/a
Compliance Energy Total	65.45	64.18	1.27	1.9

REQUIRED SPECIAL FEATURES

The following are features that must be installed as condition for meeting the modeled energy performance

2019 Low-Rise Residential Mandatory Measures Summary

*NOTE: Low-rise residential buildings subject to the Energy Standards must comply with all applicable mandatory measures, regardless of the compliance approach used. Review the respective section for more information. *Exceptions may apply.*
(Original 08/2019)

Building Envelope Measures:	
§ 110.6(a)1:	**Air Leakage.** Manufactured fenestration, exterior doors, and exterior pet doors must limit air leakage to 0.3 cfm per square foot or less when tested per NFRC-400, ASTM E283 or AAMA/WDMA/CSA 101/I.S.2/A440-2011.*
§ 110.6(a)5:	**Labeling.** Fenestration products and exterior doors must have a label meeting the requirements of Section 10-111(a).
§ 110.6(b):	**Field fabricated exterior doors and fenestration** products must use U-factors and solar heat gain coefficient (SHGC) values from Tables 110.6-A, 110.6-B, or JA4.5 for exterior doors. They must be caulked and/or weather stripped.*
§ 110.7:	**Air Leakage.** All joints, penetrations, and other openings in the building envelope that are potential sources of air leakage must be caulked, gasketed, or weather stripped.
§ 110.8(a):	**Insulation Certification by Manufacturers.** Insulation must be certified by the Department of Consumer Affairs, Bureau of Household Goods and Services (BHGS).
§ 110.8(g):	**Insulation Requirements for Heated Slab Floors.** Heated slab floors must be insulated per the requirements of Section 110.8(g).
§ 110.8(i):	**Roofing Products Solar Reflectance and Thermal Emittance.** The thermal emittance and aged solar reflectance values of the roofing material must meet the requirements of § 110.8(i) and be labeled per §10-113 when the installation of a cool roof is specified on the CF1R.
§ 110.8(j):	**Radiant Barrier.** When required, radiant barriers must have an emittance of 0.05 or less and be certified to the Department of Consumer Affairs.
§ 150.0(a):	**Ceiling and Rafter Roof Insulation.** Minimum R-22 insulation in wood-frame ceiling; or the weighted average U-factor must not exceed 0.043. Minimum R-19 or weighted average U-factor of 0.054 or less in a rafter roof alteration. Attic access doors must have permanently attached insulation using adhesive or mechanical fasteners. The attic access must be gasketed to prevent air leakage. Insulation must be installed in direct contact with a continuous roof or ceiling which is sealed to limit infiltration and exfiltration as specified in § 110.7, including but not limited to placing insulation either above or below the roof deck or on top of a drywall ceiling.*
§ 150.0(b):	**Loose-fill Insulation.** Loose fill insulation must meet the manufacturer's required density for the labeled R-value.
§ 150.0(c):	**Wall Insulation.** Minimum R-13 insulation in 2x4 inch wood framing wall or have a U-factor of 0.102 or less, or R-20 in 2x6 inch wood framing or have a U-factor of 0.071 or less, (R-19 in 2x6 or U-factor of 0.074 or less). Opaque non-framed assemblies must have an overall assembly U-factor not exceeding 0.102, equivalent to an installed value of R-13 in a wood framed assembly. Masonry walls must meet Table 150.1-A or B.*
§ 150.0(d):	**Raised-floor Insulation.** Minimum R-19 insulation in raised wood framed floor or 0.037 maximum U-factor.*
§ 150.0(f):	**Slab Edge Insulation.** Slab edge insulation must meet all of the following: have a water absorption rate, for the insulation material alone without facings no greater than 0.3%; have a water vapor permeance no greater than 2.0 perm per inch; be protected from physical damage and UV light deterioration; and, when installed as part of a heated slab floor, meet the requirements of § 110.8(g).
§ 150.0(g)1:	**Vapor Retarder.** In climate zones 1 through 16, the earth floor of unvented crawl space must be covered with a Class I or Class II vapor retarder. This requirement also applies to controlled ventilation crawl space for buildings complying with the exception to § 150.0(d).
§ 150.0(g)2:	**Vapor Retarder.** In climate zones 14 and 16, a Class I or Class II vapor retarder must be installed on the conditioned space side of all insulation in all exterior walls, vented attics, and unvented attics with air-permeable insulation.
§ 150.0(q):	**Fenestration Products.** Fenestration, including skylights, separating conditioned space from unconditioned space or outdoors must have a maximum U-factor of 0.58; or the weighted average U-factor of all fenestration must not exceed 0.58.*
Fireplaces, Decorative Gas Appliances, and Gas Log Measures:	
§ 110.5(e)	**Pilot Light.** Continuously burning pilot lights are not allowed for indoor and outdoor fireplaces.
§ 150.0(e)1:	**Closable Doors.** Masonry or factory-built fireplaces must have a closable metal or glass door covering the entire opening of the firebox.
§ 150.0(e)2:	**Combustion Intake.** Masonry or factory-built fireplaces must have a combustion outside air intake, which is at least six square inches in area and is equipped with a readily accessible, operable, and tight-fitting damper or combustion-air control device.*
§ 150.0(e)3:	**Flue Damper.** Masonry or factory-built fireplaces must have a flue damper with a readily accessible control.*
Space Conditioning, Water Heating, and Plumbing System Measures:	
§ 110.0-§ 110.3:	**Certification.** Heating, ventilation and air conditioning (HVAC) equipment, water heaters, showerheads, faucets, and all other regulated appliances must be certified by the manufacturer to the Energy Commission.*
§ 110.2(a):	**HVAC Efficiency.** Equipment must meet the applicable efficiency requirements in Table 110.2-A through Table 110.2-K.*
§ 110.2(b):	**Controls for Heat Pumps with Supplementary Electric Resistance Heaters.** Heat pumps with supplementary electric resistance heaters must have controls that prevent supplementary heater operation when the heating load can be met by the heat pump alone; and in which the cut-on temperature for compression heating is higher than the cut-on temperature for supplementary heating, and the cut-off temperature for compression heating is higher than the cut-off temperature for supplementary heating.*
§ 110.2(c):	**Thermostats.** All heating or cooling systems not controlled by a central energy management control system (EMCS) must have a setback thermostat.*
§ 110.3(c)4:	**Water Heating Recirculation Loops Serving Multiple Dwelling Units.** Water heating recirculation loops serving multiple dwelling units must meet the air release valve, backflow prevention, pump priming, pump isolation valve, and recirculation loop connection requirements of § 110.3(c)4.
§ 110.3(c)6:	**Isolation Valves.** Instantaneous water heaters with an input rating greater than 6.8 kBTU per hour (2 kW) must have isolation valves with hose bibbs or other fittings on both cold and hot water lines to allow for flushing the water heater when the valves are closed.
§ 110.5:	**Pilot Lights.** Continuously burning pilot lights are prohibited for natural gas: fan-type central furnaces; household cooking appliances (appliances without an electrical supply voltage connection with pilot lights that consume less than 150 Btu/hr are exempt); and pool and spa heaters.*
§ 150.0(h)1:	**Building Cooling and Heating Loads.** Heating and/or cooling loads are calculated in accordance with the ASHRAE Handbook, Equipment Volume, Applications Volume, and Fundamentals Volume; the SMACNA Residential Comfort System Installation Standards Manual; or the ACCA Manual J using design conditions specified in § 150.0(h)2.

2019 Low-Rise Residential Mandatory Measures Summary

Requirements for Ventilation and Indoor Air Quality:	
§ 150.0(o)1:	**Requirements for Ventilation and Indoor Air Quality**. All dwelling units must meet the requirements of ASHRAE Standard 62.2, Ventilation and Acceptable Indoor Air Quality in Residential Buildings subject to the amendments specified in § 150.0(o)1.
§ 150.0(o)1C:	**Single Family Detached Dwelling Units.** Single family detached dwelling units, and attached dwelling units not sharing ceilings or floors with other dwelling units, occupiable spaces, public garages, or commercial spaces must have mechanical ventilation airflow provided at rates determined by ASHRAE 62.2 Sections 4.1.1 and 4.1.2 and as specified in § 150.0(o)1C.
§ 150.0(o)1E:	**Multifamily Attached Dwelling Units.** Multifamily attached dwelling units must have mechanical ventilation airflow provided at rates in accordance with Equation 150.0-B and must be either a balanced system or continuous supply or continuous exhaust system. If a balanced system is not used, all units in the building must use the same system type and the dwelling-unit envelope leakage must be ≤ 0.3 CFM at 50 Pa (0.2 inch water) per square foot of dwelling unit envelope surface area and verified in accordance with Reference Residential Appendix RA3.8.
§ 150.0(o)1F:	**Multifamily Building Central Ventilation Systems.** Central ventilation systems that serve multiple dwelling units must be balanced to provide ventilation airflow for each dwelling unit served at a rate equal to or greater than the rate specified by Equation 150.0-B. All unit airflows must be within 20% of the unit with the lowest airflow rate as it relates to the individual unit's minimum required airflow rate needed for compliance.
§ 150.0(o)1G:	**Kitchen Range Hoods.** Kitchen range hoods must be rated for sound in accordance with Section 7.2 of ASHRAE 62.2.
§ 150.0(o)2:	**Field Verification and Diagnostic Testing.** Dwelling unit ventilation airflow must be verified in accordance with Reference Residential Appendix RA3.7. Kitchen range hoods must be verified in accordance with Reference Residential Appendix RA3.7.4.3 to confirm it is rated by HVI to comply with the airflow rates and sound requirements as specified in Section 5 and 7.2 of ASHRAE 62.2.
Pool and Spa Systems and Equipment Measures:	
§ 110.4(a):	**Certification by Manufacturers.** Any pool or spa heating system or equipment must be certified to have all of the following: a thermal efficiency that complies with the Appliance Efficiency Regulations; an on-off switch mounted outside of the heater that allows shutting off the heater without adjusting the thermostat setting; a permanent weatherproof plate or card with operating instructions; and must not use electric resistance heating.*
§ 110.4(b)1:	**Piping.** Any pool or spa heating system or equipment must be installed with at least 36 inches of pipe between the filter and the heater, or dedicated suction and return lines, or built-in or built-up connections to allow for future solar heating.
§ 110.4(b)2:	**Covers.** Outdoor pools or spas that have a heat pump or gas heater must have a cover.
§ 110.4(b)3:	**Directional Inlets and Time Switches for Pools.** Pools must have directional inlets that adequately mix the pool water, and a time switch that will allow all pumps to be set or programmed to run only during off-peak electric demand periods.
§ 110.5:	**Pilot Light.** Natural gas pool and spa heaters must not have a continuously burning pilot light.
§ 150.0(p):	**Pool Systems and Equipment Installation.** Residential pool systems or equipment must meet the specified requirements for pump sizing, flow rate, piping, filters, and valves.*
Lighting Measures:	
§ 110.9:	**Lighting Controls and Components.** All lighting control devices and systems, ballasts, and luminaires must meet the applicable requirements of § 110.9.*
§ 150.0(k)1A:	**Luminaire Efficacy.** All installed luminaires must meet the requirements in Table 150.0-A.
§ 150.0(k)1B:	**Blank Electrical Boxes.** The number of electrical boxes that are more than 5 feet above the finished floor and do not contain a luminaire or other device must be no greater than the number of bedrooms. These electrical boxes must be served by a dimmer, vacancy sensor control, or fan speed control.
§ 150.0(k)1C:	**Recessed Downlight Luminaires in Ceilings.** Luminaires recessed into ceilings must meet all of the requirements for: insulation contact (IC) labeling; air leakage; sealing; maintenance; and socket and light source as described in § 150.0(k)1C.
§ 150.0(k)1D:	**Electronic Ballasts for Fluorescent Lamps.** Ballasts for fluorescent lamps rated 13 watts or greater must be electronic and must have an output frequency no less than 20 kHz.
§ 150.0(k)1E:	**Night Lights, Step Lights, and Path Lights.** Night lights, step lights and path lights are not required to comply with Table 150.0-A or be controlled by vacancy sensors provided they are rated to consume no more than 5 watts of power and emit no more than 150 lumens.
§ 150.0(k)1F:	**Lighting Integral to Exhaust Fans.** Lighting integral to exhaust fans (except when installed by the manufacturer in kitchen exhaust hoods) must meet the applicable requirements of § 150.0(k).*
§ 150.0(k)1G:	**Screw based luminaires.** Screw based luminaires must contain lamps that comply with Reference Joint Appendix JA8.*
§ 150.0(k)1H:	**Light Sources in Enclosed or Recessed Luminaires.** Lamps and other separable light sources that are not compliant with the JA8 elevated temperature requirements, including marking requirements, must not be installed in enclosed or recessed luminaires.
§ 150.0(k)1I:	**Light Sources in Drawers, Cabinets, and Linen Closets.** Light sources internal to drawers, cabinetry or linen closets are not required to comply with Table 150.0-A or be controlled by vacancy sensors provided that they are rated to consume no more than 5 watts of power, emit no more than 150 lumens, and are equipped with controls that automatically turn the lighting off when the drawer, cabinet or linen closet is closed.
§ 150.0(k)2A:	**Interior Switches and Controls.** All forward phase cut dimmers used with LED light sources must comply with NEMA SSL 7A.
§ 150.0(k)2B:	**Interior Switches and Controls.** Exhaust fans must be controlled separately from lighting systems.*
§ 150.0(k)2C:	**Interior Switches and Controls.** Lighting must have readily accessible wall-mounted controls that allow the lighting to be manually turned ON and OFF.*
§ 150.0(k)2D:	**Interior Switches and Controls.** Controls and equipment must be installed in accordance with manufacturer's instructions.
§ 150.0(k)2E:	**Interior Switches and Controls.** Controls must not bypass a dimmer, occupant sensor, or vacancy sensor function if the control is installed to comply with § 150.0(k).
§ 150.0(k)2F:	**Interior Switches and Controls.** Lighting controls must comply with the applicable requirements of § 110.9.

2019 Low-Rise Residential Mandatory Measures Summary

§ 150.0(h)3A:	**Clearances.** Air conditioner and heat pump outdoor condensing units must have a clearance of at least 5 feet from the outlet of any dryer vent.
§ 150.0(h)3B:	**Liquid Line Drier.** Air conditioners and heat pump systems must be equipped with liquid line filter driers if required, as specified by the manufacturer's instructions.
§ 150.0(j)1:	**Storage Tank Insulation.** Unfired hot water tanks, such as storage tanks and backup storage tanks for solar water-heating systems, must have a minimum of R-12 external insulation or R-16 internal insulation where the internal insulation R-value is indicated on the exterior of the tank.
§ 150.0(j)2A:	**Water Piping, Solar Water-heating System Piping, and Space Conditioning System Line Insulation.** All domestic hot water piping must be insulated as specified in Section 609.11 of the California Plumbing Code. In addition, the following piping conditions must have a minimum insulation wall thickness of 1 inch or a minimum insulation R-value of 7.7: the first 5 feet of cold water pipes from the storage tank; all hot water piping with a nominal diameter equal to or greater than 3/4 inch and less than 1 inch; all hot water piping with a nominal diameter less than 3/4 inch that is: associated with a domestic hot water recirculation system, from the heating source to storage tank or between tanks, buried below grade, and from the heating source to kitchen fixtures.*
§ 150.0(j)3:	**Insulation Protection.** Piping insulation must be protected from damage, including that due to sunlight, moisture, equipment maintenance, and wind as required by Section 120.3(b). Insulation exposed to weather must be water retardant and protected from UV light (no adhesive tapes). Insulation covering chilled water piping and refrigerant suction piping located outside the conditioned space must include, or be protected by, a Class I or Class II vapor retarder. Pipe insulation buried below grade must be installed in a waterproof and non-crushable casing or sleeve.
§ 150.0(n)1:	**Gas or Propane Water Heating Systems.** Systems using gas or propane water heaters to serve individual dwelling units must include all of the following: A dedicated 125 volt, 20 amp electrical receptacle that is connected to the electric panel with a 120/240 volt 3 conductor, 10 AWG copper branch circuit, within 3 feet from the water heater without obstruction. Both ends of the unused conductor must be labeled with the word "spare" and be electrically isolated. Have a reserved single pole circuit breaker space in the electrical panel adjacent to the circuit breaker for the branch circuit and labeled with the words "Future 240V Use"; a Category III or IV vent, or a Type B vent with straight pipe between the outside termination and the space where the water heater is installed; a condensate drain that is no more than 2 inches higher than the base of the water heater, and allows natural draining without pump assistance; and a gas supply line with a capacity of at least 200,000 Btu per hour.
§ 150.0(n)2:	**Recirculating Loops.** Recirculating loops serving multiple dwelling units must meet the requirements of § 110.3(c)5.
§ 150.0(n)3:	**Solar Water-heating Systems.** Solar water-heating systems and collectors must be certified and rated by the Solar Rating and Certification Corporation (SRCC), the International Association of Plumbing and Mechanical Officials, Research and Testing (IAPMO R&T), or by a listing agency that is approved by the Executive Director.
Ducts and Fans Measures:	
§ 110.8(d)3:	**Ducts.** Insulation installed on an existing space-conditioning duct must comply with California Mechanical Code (CMC) Section 604.0. If a contractor installs the insulation, the contractor must certify to the customer in writing, that the insulation meets this requirement.
§ 150.0(m)1:	**CMC Compliance.** All air-distribution system ducts and plenums must meet the requirements of the CMC Section 601.0, 602.0, 603.0, 604.0, 605.0 and ANSI/SMACNA-006-2006 HVAC Duct Construction Standards Metal and Flexible 3rd Edition. Portions of supply-air and return-air ducts and plenums must be insulated to a minimum installed level of R-6.0 or a minimum installed level of R-4.2 when ducts are entirely in conditioned space as confirmed through field verification and diagnostic testing (RA3.1.4.3.8). Portions of the duct system completely exposed and surrounded by directly conditioned space are not required to be insulated. Connections of metal ducts and inner core of flexible ducts must be mechanically fastened. Openings must be sealed with mastic, tape, or other duct-closure system that meets the applicable requirements of UL 181, UL 181A, or UL 181B or aerosol sealant that meets the requirements of UL 723. If mastic or tape is used to seal openings greater than ¼ inch, the combination of mastic and either mesh or tape must be used. Building cavities, support platforms for air handlers, and plenums designed or constructed with materials other than sealed sheet metal, duct board or flexible duct must not be used to convey conditioned air. Building cavities and support platforms may contain ducts. Ducts installed in cavities and support platforms must not be compressed to cause reductions in the cross-sectional area.*
§ 150.0(m)2:	**Factory-Fabricated Duct Systems.** Factory-fabricated duct systems must comply with applicable requirements for duct construction, connections, and closures; joints and seams of duct systems and their components must not be sealed with cloth back rubber adhesive duct tapes unless such tape is used in combination with mastic and draw bands.
§ 150.0(m)3:	**Field-Fabricated Duct Systems.** Field-fabricated duct systems must comply with applicable requirements for: pressure-sensitive tapes, mastics, sealants, and other requirements specified for duct construction.
§ 150.0(m)7:	**Backdraft Damper.** Fan systems that exchange air between the conditioned space and outdoors must have backdraft or automatic dampers.
§ 150.0(m)8:	**Gravity Ventilation Dampers.** Gravity ventilating systems serving conditioned space must have either automatic or readily accessible, manually operated dampers in all openings to the outside, except combustion inlet and outlet air openings and elevator shaft vents.
§ 150.0(m)9:	**Protection of Insulation.** Insulation must be protected from damage, sunlight, moisture, equipment maintenance, and wind. Insulation exposed to weather must be suitable for outdoor service. For example, protected by aluminum, sheet metal, painted canvas, or plastic cover. Cellular foam insulation must be protected as above or painted with a coating that is water retardant and provides shielding from solar radiation.
§ 150.0(m)10:	**Porous Inner Core Flex Duct.** Porous inner core flex ducts must have a non-porous layer between the inner core and outer vapor barrier.
§ 150.0(m)11:	**Duct System Sealing and Leakage Test.** When space conditioning systems use forced air duct systems to supply conditioned air to an occupiable space, the ducts must be sealed and duct leakage tested, as confirmed through field verification and diagnostic testing, in accordance with § 150.0(m)11 and Reference Residential Appendix RA3.
§ 150.0(m)12:	**Air Filtration.** Space conditioning systems with ducts exceeding 10 feet and the supply side of ventilation systems must have MERV 13 or equivalent filters. Filters for space conditioning systems must have a 2 inch depth or can be 1 inch if sized per Equation 150.0-A. Pressure drops and labeling must meet the requirements in §150.0(m)12. Filters must be accessible for regular service.*
§ 150.0(m)13:	**Space Conditioning System Airflow Rate and Fan Efficacy.** Space conditioning systems that use ducts to supply cooling must have a hole for the placement of a static pressure probe, or a permanently installed static pressure probe in the supply plenum. Airflow must be ≥ 350 CFM per ton of nominal cooling capacity, and an air-handling unit fan efficacy ≤ 0.45 watts per CFM for gas furnace air handlers and ≤ 0.58 watts per CFM for all others. Small duct high velocity systems must provide an airflow ≥ 250 CFM per ton of nominal cooling capacity, and an air-handling unit fan efficacy ≤ 0.62 watts per CFM. Field verification testing is required in accordance with Reference Residential Appendix RA3.3.*

2019 Low-Rise Residential Mandatory Measures Summary

§ 150.0(k)2G:	**Interior Switches and Controls.** An energy management control system (EMCS) may be used to comply with control requirements if it: provides functionality of the specified control according to § 110.9; meets the Installation Certificate requirements of § 130.4; meets the EMCS requirements of § 130.0(e); and meets all other requirements in § 150.0(k)2.
§ 150.0(k)2H:	**Interior Switches and Controls.** A multiscene programmable controller may be used to comply with dimmer requirements in § 150.0(k) if it provides the functionality of a dimmer according to § 110.9, and complies with all other applicable requirements in § 150.0(k)2.
§ 150.0(k)2I:	**Interior Switches and Controls.** In bathrooms, garages, laundry rooms, and utility rooms, at least one luminaire in each of these spaces must be controlled by an occupant sensor or a vacancy sensor providing automatic-off functionality. If an occupant sensor is installed, it must be initially configured to manual-on operation using the manual control required under Section 150.0(k)2C.
§ 150.0(k)2J:	**Interior Switches and Controls.** Luminaires that are or contain light sources that meet Reference Joint Appendix JA8 requirements for dimming, and that are not controlled by occupancy or vacancy sensors, must have dimming controls.*
§ 150.0(k)2K:	**Interior Switches and Controls.** Under cabinet lighting must be controlled separately from ceiling-installed lighting systems.
§ 150.0(k)3A:	**Residential Outdoor Lighting.** For single-family residential buildings, outdoor lighting permanently mounted to a residential building, or to other buildings on the same lot, must meet the requirement in item § 150.0(k)3Ai (ON and OFF switch) and the requirements in either § 150.0(k)3Aii (photocell and either a motion sensor or automatic time switch control) or § 150.0(k)3Aiii (astronomical time clock), or an EMCS.
§ 150.0(k)3B:	**Residential Outdoor Lighting.** For low-rise residential buildings with four or more dwelling units, outdoor lighting for private patios, entrances, balconies, and porches; and residential parking lots and carports with less than eight vehicles per site must comply with either Section 150.0(k)3A or with the applicable requirements in Sections 110.9, 130.0, 130.2, 130.4, 140.7 and 141.0.
§ 150.0(k)3C:	**Residential Outdoor Lighting.** For low-rise residential buildings with four or more dwelling units, any outdoor lighting for residential parking lots or carports with a total of eight or more vehicles per site and any outdoor lighting not regulated by Section 150.0(k)3B or Section 150.0(k)3D must comply with the applicable requirements in Sections 110.9, 130.0, 130.2, 130.4, 140.7 and 141.0.
§ 150.0(k)4:	**Internally illuminated address signs.** Internally illuminated address signs must comply with § 140.8; or must consume no more than 5 watts of power as determined according to § 130.0(c).
§ 150.0(k)5:	**Residential Garages for Eight or More Vehicles.** Lighting for residential parking garages for eight or more vehicles must comply with the applicable requirements for nonresidential garages in Sections 110.9, 130.0, 130.1, 130.4, 140.6, and 141.0.
§ 150.0(k)6A:	**Interior Common Areas of Low-rise Multifamily Residential Buildings.** In a low-rise multifamily residential building where the total interior common area in a single building equals 20 percent or less of the floor area, permanently installed lighting for the interior common areas in that building must be comply with Table 150.0-A and be controlled by an occupant sensor.
§ 150.0(k)6B:	**Interior Common Areas of Low-rise Multifamily Residential Buildings.** In a low-rise multifamily residential building where the total interior common area in a single building equals more than 20 percent of the floor area, permanently installed lighting for the interior common areas in that building must: i. Comply with the applicable requirements in Sections 110.9, 130.0, 130.1, 140.6 and 141.0; and ii. Lighting installed in corridors and stairwells must be controlled by occupant sensors that reduce the lighting power in each space by at least 50 percent. The occupant sensors must be capable of turning the light fully on and off from all designed paths of ingress and egress.
Solar Ready Buildings:	
§ 110.10(a)1:	**Single Family Residences.** Single family residences located in subdivisions with ten or more single family residences and where the application for a tentative subdivision map for the residences has been deemed complete and approved by the enforcement agency, which do not have a photovoltaic system installed, must comply with the requirements of § 110.10(b) through § 110.10(e).
§ 110.10(a)2:	**Low-rise Multifamily Buildings.** Low-rise multi-family buildings that do not have a photovoltaic system installed must comply with the requirements of § 110.10(b) through § 110.10(d).
§ 110.10(b)1:	**Minimum Solar Zone Area.** The solar zone must have a minimum total area as described below. The solar zone must comply with access, pathway, smoke ventilation, and spacing requirements as specified in Title 24, Part 9 or other Parts of Title 24 or in any requirements adopted by a local jurisdiction. The solar zone total area must be comprised of areas that have no dimension less than 5 feet and are no less than 80 square feet each for buildings with roof areas less than or equal to 10,000 square feet or no less than 160 square feet each for buildings with roof areas greater than 10,000 square feet. For single family residences, the solar zone must be located on the roof or overhang of the building and have a total area no less than 250 square feet. For low-rise multi-family buildings the solar zone must be located on the roof or overhang of the building, or on the roof or overhang of another structure located within 250 feet of the building, or on covered parking installed with the building project, and have a total area no less than 15 percent of the total roof area of the building excluding any skylight area. The solar zone requirement is applicable to the entire building, including mixed occupancy.*
§ 110.10(b)2:	**Azimuth.** All sections of the solar zone located on steep-sloped roofs must be oriented between 90 degrees and 300 degrees of true north.
§ 110.10(b)3A:	**Shading.** The solar zone must not contain any obstructions, including but not limited to: vents, chimneys, architectural features, and roof mounted equipment.*
§ 110.10(b)3B:	**Shading.** Any obstruction located on the roof or any other part of the building that projects above a solar zone must be located at least twice the distance, measured in the horizontal plane, of the height difference between the highest point of the obstruction and the horizontal projection of the nearest point of the solar zone, measured in the vertical plane.*
§ 110.10(b)4:	**Structural Design Loads on Construction Documents.** For areas of the roof designated as a solar zone, the structural design loads for roof dead load and roof live load must be clearly indicated on the construction documents.
§ 110.10(c):	**Interconnection Pathways.** The construction documents must indicate: a location reserved for inverters and metering equipment and a pathway reserved for routing of conduit from the solar zone to the point of interconnection with the electrical service; and for single family residences and central water-heating systems, a pathway reserved for routing plumbing from the solar zone to the water-heating system.
§ 110.10(d):	**Documentation.** A copy of the construction documents or a comparable document indicating the information from § 110.10(b) through § 110.10(c) must be provided to the occupant.
§ 110.10(e)1:	**Main Electrical Service Panel.** The main electrical service panel must have a minimum busbar rating of 200 amps.
§ 110.10(e)2:	**Main Electrical Service Panel.** The main electrical service panel must have a reserved space to allow for the installation of a double pole circuit breaker for a future solar electric installation. The reserved space must be permanently marked as "For Future Solar Electric".

2019 LOW-RISE
RESIDENTIAL MANDATORY
MEASURES SUMMARY

Michael Helm, AIA Architect & Associates
200 Seventh Avenue, #110 Santa Cruz, California 95062 (831) 476-5386

MONTEREY ENERGY GROUP
Consulting Mechanical Engineering
26465 Carmel Rancho Blvd. Suite 8, Carmel, CA 93923
831-372-8328 VOICE www.montereyenergygroup.com
831-359-4173 FAX cad@meg4.com

REMODEL & ADDITIONS TO THE:
RENFREW RESIDENCE
14500 ARNERICH HILL ROAD – APN 537-12-012
LOS GATOS, CALIFORNIA

2019 LOW-RISE RESIDENTIAL MANDATORY MEASURES SUMMARY

11.14.22
NTS
MEH MEG
2108

AIA California

2019 CALIFORNIA GREEN BUILDING STANDARDS CODE
RESIDENTIAL MANDATORY MEASURES, SHEET 1 (January 2020, Includes August 2019 Supplement)

Y = YES
N/A = NOT APPLICABLE
RESPON. PARTY = RESPONSIBLE PARTY (ie: ARCHITECT, ENGINEER, OWNER, CONTRACTOR, INSPECTOR ETC.)

Y | N/A | RESPON. PARTY

CHAPTER 3
GREEN BUILDING
SECTION 301 GENERAL

301.1 SCOPE. Buildings shall be designed to include the green building measures specified as mandatory in the application checklists contained in this code. Voluntary green building measures are also included in the application checklists and may be included in the design and construction of structures covered by this code, but are not required unless adopted by a city, county, or city and county as specified in Section 101.7.

301.1.1 Additions and alterations. [HCD] The mandatory provisions of Chapter 4 shall be applied to additions or alterations of existing residential buildings where the addition or alteration increases the building's conditioned area, volume, or size. The requirements shall apply only to and/or within the specific area of the addition or alteration.

Note: On and after January 1, 2014, residential buildings undergoing permitted alterations, additions, or improvements shall replace noncompliant plumbing fixtures with water-conserving plumbing fixtures. Plumbing fixture replacement is required prior to issuance of a certificate of final completion, certificate of occupancy or final permit approval by the local building department. See Civil Code Section 1101.1, et seq., for the definition of a noncompliant plumbing fixture, types of residential buildings affected and other important enactment dates.

301.2 LOW-RISE AND HIGH-RISE RESIDENTIAL BUILDINGS. [HCD] The provisions of individual sections of CALGreen may apply to either low-rise residential buildings high-rise residential buildings, or both. Individual sections will be designated by banners to indicate where the section applies specifically to low-rise only (LR) or high-rise only (HR). When the section applies to both low-rise and high-rise buildings, no banner will be used.

SECTION 302 MIXED OCCUPANCY BUILDINGS

302.1 MIXED OCCUPANCY BUILDINGS. In mixed occupancy buildings, each portion of a building shall comply with the specific green building measures applicable to each specific occupancy.

ABBREVIATION DEFINITIONS:

HCD	Department of Housing and Community Development
BSC	California Building Standards Commission
DSA-SS	Division of the State Architect, Structural Safety
OSHPD	Office of Statewide Health Planning and Development
LR	Low Rise
HR	High Rise
AA	Additions and Alterations
N	New

CHAPTER 4
RESIDENTIAL MANDATORY MEASURES
DIVISION 4.1 PLANNING AND DESIGN
SECTION 4.102 DEFINITIONS

4.102.1 DEFINITIONS
The following terms are defined in Chapter 2 *(and are included here for reference)*

FRENCH DRAIN. A trench, hole or other depressed area loosely filled with rock, gravel, fragments of brick or similar pervious material used to collect or channel drainage or runoff water.

WATTLES. Wattles are used to reduce sediment in runoff. Wattles are often constructed of natural plant materials such as hay, straw or similar material shaped in the form of tubes and placed on a downflow slope. Wattles are also used for perimeter and inlet controls.

4.106 SITE DEVELOPMENT

4.106.1 GENERAL. Preservation and use of available natural resources shall be accomplished through evaluation and careful planning to minimize negative effects on the site and adjacent areas. Preservation of slopes, management of storm water drainage and erosion controls shall comply with this section.

4.106.2 STORM WATER DRAINAGE AND RETENTION DURING CONSTRUCTION. Projects which disturb less than one acre of soil and are not part of a larger common plan of development which in total disturbs one acre or more, shall manage storm water drainage during construction. In order to manage storm water drainage during construction, one or more of the following measures shall be implemented to prevent flooding of adjacent property, prevent erosion and retain soil runoff on the site.

1. Retention basins of sufficient size shall be utilized to retain storm water on the site.
2. Where storm water is conveyed to a public drainage system, collection point, gutter or similar disposal method, water shall be filtered by use of a barrier system, wattle or other method approved by the enforcing agency.
3. Compliance with a lawfully enacted storm water management ordinance.

Note: Refer to the State Water Resources Control Board for projects which disturb one acre or more of soil, or are part of a larger common plan of development which in total disturbs one acre or more of soil.

(Website: https://www.waterboards.ca.gov/water_issues/programs/stormwater/construction.html)

4.106.3 GRADING AND PAVING. Construction plans shall indicate how the site grading or drainage system will manage all surface water flows to keep water from entering buildings. Examples of methods to manage surface water include, but are not limited to, the following:

1. Swales
2. Water collection and disposal systems
3. French drains
4. Water retention gardens
5. Other water measures which keep surface water away from buildings and aid in groundwater recharge.

Exception: Additions and alterations not altering the drainage path.

4.106.4 Electric vehicle (EV) charging for new construction. New construction shall comply with Sections 4.106.4.1, 4.106.4.2, or 4.106.4.3 to facilitate future installation and use of EV chargers. Electric vehicle supply equipment (EVSE) shall be installed in accordance with the *California Electrical Code*, Article 625.

Exceptions:
1. On a case-by-case basis, where the local enforcing agency has determined EV charging and infrastructure are not feasible based upon one or more of the following conditions:
   1.1 Where there is no commercial power supply.
   1.2 Where there is evidence substantiating that meeting the requirements will alter the local utility infrastructure design requirements on the utility side of the meter so as to increase the utility side cost to the homeowner or the developer by more than $400.00 per dwelling unit.
2. Accessory Dwelling Units (ADU) and Junior Accessory Dwelling Units (JADU) without additional parking facilities.

4.106.4.1 New one- and two-family dwellings and townhouses with attached private garages. For each dwelling unit, install a listed raceway to accommodate a dedicated 208/240-volt branch circuit. The raceway shall not be less than trade size 1 (nominal 1-inch inside diameter). The raceway shall originate at the main service or subpanel and shall terminate into a listed cabinet, box or other enclosure in close proximity to the proposed location of an EV charger. Raceways are required to be continuous at enclosed, inaccessible or concealed areas and spaces. The service panel and/or subpanel shall provide capacity to install a 40-ampere minimum dedicated branch circuit and space(s) reserved to permit installation of a branch circuit overcurrent protective device.

4.106.4.1.1 Identification. The service panel or subpanel circuit directory shall identify the overcurrent protective device space(s) reserved for future EV charging as "EV CAPABLE". The raceway termination location shall be permanently and visibly marked as "EV CAPABLE".

4.106.4.2.3 Single EV space required. Install a listed raceway capable of accommodating a 208/240-volt dedicated branch circuit. The raceway shall not be less than trade size 1 (nominal 1-inch inside diameter). The raceway shall originate at the main service or subpanel and shall terminate into a listed cabinet, box or enclosure in close proximity to the proposed location of the EV space. Construction documents shall identify the raceway termination point. The service panel and/or subpanel shall provide capacity to install a 40-ampere minimum dedicated branch circuit and space(s) reserved to permit installation of a branch circuit overcurrent protective device.

DIVISION 4.2 ENERGY EFFICIENCY

4.201 GENERAL
4.201.1 SCOPE. For the purposes of mandatory energy efficiency standards in this code, the California Energy Commission will continue to adopt mandatory standards.

DIVISION 4.3 WATER EFFICIENCY AND CONSERVATION

4.303 INDOOR WATER USE

4.303.1 WATER CONSERVING PLUMBING FIXTURES AND FITTINGS. Plumbing fixtures (water closets and urinals) and fittings (faucets and showerheads) shall comply with the sections 4.303.1.1, 4.303.1.2, 4.303.1.3, and 4.303.1.4.

Note: All noncompliant plumbing fixtures in any residential real property shall be replaced with water-conserving plumbing fixtures. Plumbing fixture replacement is required prior to issuance of a certificate of final completion, certificate of occupancy, or final permit approval by the local building department. See Civil Code Section 1101.1, et seq., for the definition of a noncompliant plumbing fixture, types of residential buildings affected and other important enactment dates.

4.303.1.1 Water Closets. The effective flush volume of all water closets shall not exceed 1.28 gallons per flush. Tank-type water closets shall be certified to the performance criteria of the U.S. EPA WaterSense Specification for Tank-type Toilets.

Note: The effective flush volume of dual flush toilets is defined as the composite, average flush volume of two reduced flushes and one full flush.

4.303.1.2 Urinals. The effective flush volume of wall mounted urinals shall not exceed 0.125 gallons per flush. The effective flush volume of all other urinals shall not exceed 0.5 gallons per flush.

4.303.1.3 Showerheads.

4.303.1.3.1 Single Showerhead. Showerheads shall have a maximum flow rate of not more than 1.8 gallons per minute at 80 psi. Showerheads shall be certified to the performance criteria of the U.S. EPA WaterSense Specification for Showerheads.

4.303.1.3.2 Multiple showerheads serving one shower. When a shower is served by more than one showerhead, the combined flow rate of all the showerheads and/or other shower outlets controlled by a single valve shall not exceed 1.8 gallons per minute at 80 psi, or the shower shall be designed to only allow one shower outlet to be in operation at a time.

Note: A hand-held shower shall be considered a showerhead.

4.303.1.4 Faucets.

4.303.1.4.1 Residential Lavatory Faucets. The maximum flow rate of residential lavatory faucets shall not exceed 1.2 gallons per minute at 60 psi. The minimum flow rate of residential lavatory faucets shall not be less than 0.8 gallons per minute at 20 psi.

4.303.1.4.2 Lavatory Faucets in Common and Public Use Areas. The maximum flow rate of lavatory faucets installed in common and public use areas (outside of dwellings or sleeping units) in residential buildings shall not exceed 0.5 gallons per minute at 60 psi.

4.303.1.4.3 Metering Faucets. Metering faucets when installed in residential buildings shall not deliver more than 0.2 gallons per cycle.

4.303.1.4.4 Kitchen Faucets. The maximum flow rate of kitchen faucets shall not exceed 1.8 gallons per minute at 60 psi. Kitchen faucets may temporarily increase the flow above the maximum rate, but not to exceed 2.2 gallons per minute at 60 psi, and must default to a maximum flow rate of 1.8 gallons per minute at 60 psi.

Note: Where complying faucets are unavailable, aerators or other means may be used to achieve reduction.

4.303.2 STANDARDS FOR PLUMBING FIXTURES AND FITTINGS. Plumbing fixtures and fittings shall be installed in accordance with the *California Plumbing Code*, and shall meet the applicable standards referenced in Table 1701.1 of the *California Plumbing Code*.

NOTE:
THIS TABLE COMPILES THE DATA IN SECTION 4.303.1, AND
IS INCLUDED AS A CONVENIENCE FOR THE USER.

TABLE – MAXIMUM FIXTURE WATER USE

FIXTURE TYPE	FLOW RATE
SHOWER HEADS (RESIDENTIAL)	1.8 GMP @ 80 PSI
LAVATORY FAUCETS (RESIDENTIAL)	MAX. 1.2 GPM @ 60 PSI MIN. 0.8 GPM @ 20 PSI
LAVATORY FAUCETS IN COMMON & PUBLIC USE AREAS	0.5 GPM @ 60 PSI
KITCHEN FAUCETS	1.8 GPM @ 60 PSI
METERING FAUCETS	0.2 GAL/CYCLE
WATER CLOSET	1.28 GAL/FLUSH
URINALS	0.125 GAL/FLUSH

4.304 OUTDOOR WATER USE

4.304.1 OUTDOOR POTABLE WATER USE IN LANDSCAPE AREAS. Residential developments shall comply with a local water efficient landscape ordinance or the current California Department of Water Resources' Model Water Efficient Landscape Ordinance (MWELO), whichever is more stringent.

NOTES:

1. The Model Water Efficient Landscape Ordinance (MWELO) is located in the *California Code Regulations*, Title 23, Chapter 2.7, Division 2. MWELO and supporting documents, including water budget calculator, are available at: https://www.water.ca.gov/

DIVISION 4.4 MATERIAL CONSERVATION AND RESOURCE EFFICIENCY

4.406 ENHANCED DURABILITY AND REDUCED MAINTENANCE

4.406.1 RODENT PROOFING. Annular spaces around pipes, electric cables, conduits or other openings in sole/bottom plates at exterior walls shall be protected against the passage of rodents by closing such openings with cement mortar, concrete masonry or a similar method acceptable to the enforcing agency.

4.408 CONSTRUCTION WASTE REDUCTION, DISPOSAL AND RECYCLING

4.408.1 CONSTRUCTION WASTE MANAGEMENT. Recycle and/or salvage for reuse a minimum of 65 percent of the non-hazardous construction and demolition waste in accordance with either Section 4.408.2, 4.408.3 or 4.408.4, or meet a more stringent local construction and demolition waste management ordinance.

Exceptions:

1. Excavated soil and land-clearing debris.
2. Alternate waste reduction methods developed by working with local agencies if diversion or recycle facilities capable of compliance with this item do not exist or are not located reasonably close to the jobsite.
3. The enforcing agency may make exceptions to the requirements of this section when isolated jobsites are located in areas beyond the haul boundaries of the diversion facility.

4.408.2 CONSTRUCTION WASTE MANAGEMENT PLAN. Submit a construction waste management plan in conformance with Items 1 through 5. The construction waste management plan shall be updated as necessary and shall be available during construction for examination by the enforcing agency.

1. Identify the construction and demolition waste materials to be diverted from disposal by recycling, reuse on the project or salvage for future use or sale.
2. Specify if construction and demolition waste materials will be sorted on-site (source separated) or bulk mixed (single stream).
3. Identify diversion facilities where the construction and demolition waste material collected will be taken.
4. Identify construction methods employed to reduce the amount of construction and demolition waste generated.
5. Specify that the amount of construction and demolition waste materials diverted shall be calculated by weight or volume, but not by both.

4.408.3 WASTE MANAGEMENT COMPANY. Utilize a waste management company, approved by the enforcing agency, which can provide verifiable documentation that the percentage of construction and demolition waste material diverted from the landfill complies with Section 4.408.1.

Note: The owner or contractor may make the determination if the construction and demolition waste materials will be diverted by a waste management company.

4.408.4 WASTE STREAM REDUCTION ALTERNATIVE [LR]. Projects that generate a total combined weight of construction and demolition waste disposed of in landfills, which do not exceed 3.4 lbs./sq.ft. of the building area shall meet the minimum 65% construction waste reduction requirement in Section 4.408.1

4.408.4.1 WASTE STREAM REDUCTION ALTERNATIVE. Projects that generate a total combined weight of construction and demolition waste disposed of in landfills, which do not exceed 2 pounds per square foot of the building area, shall meet the minimum 65% construction waste reduction requirement in Section 4.408.1

4.408.5 DOCUMENTATION. Documentation shall be provided to the enforcing agency which demonstrates compliance with Section 4.408.2, Items 1 through 5, Section 4.408.3 or Section 4.408.4..

Notes:

1. Sample forms found in "A Guide to the California Green Building Standards Code (Residential)" located at www.hcd.ca.govCALGreen.html may be used to assist in documenting compliance with this section.
2. Mixed construction and demolition debris (C & D) processors can be located at the California Department of Resources Recycling and Recovery (CalRecycle).

4.410 BUILDING MAINTENANCE AND OPERATION

4.410.1 OPERATION AND MAINTENANCE MANUAL. At the time of final inspection, a manual, compact disc, web-based reference or other media acceptable to the enforcing agency which includes all of the following shall be placed in the building:

1. Directions to the owner or occupant that the manual shall remain with the building throughout the life cycle of the structure.
2. Operation and maintenance instructions for the following:
   a. Equipment and appliances, including water-saving devices and systems, HVAC systems, photovoltaic systems, electric vehicle chargers, water-heating systems and other major appliances and equipment.
   b. Roof and yard drainage, including gutters and downspouts.
   c. Space conditioning systems, including condensers and air filters.
   d. Landscape irrigation systems.
   e. Water reuse systems.
3. Information from local utility, water and waste recovery providers on methods to further reduce resource consumption, including recycle programs and locations.
4. Public transportation and/or carpool options available in the area.
5. Educational material on the positive impacts of an interior relative humidity between 30-60 percent and what methods an occupant may use to maintain the relative humidity level in that range.
6. Information about water-conserving landscape and irrigation design and controllers which conserve water.
7. Instructions for maintaining gutters and downspouts and the importance of diverting water at least 5 feet away from the foundation.
8. Information on required routine maintenance measures, including, but not limited to, caulking, painting, grading around the building, etc.
9. Information about state solar energy and incentive programs available.
10. A copy of all special inspections verifications required by the enforcing agency or this code.

4.410.2 RECYCLING BY OCCUPANTS. Where 5 or more multifamily dwelling units are constructed on a building site, provide readily accessible area(s) that serves all buildings on the site and are identified for the depositing, storage and collection of non-hazardous materials for recycling, including (at a minimum) paper, corrugated cardboard, glass, plastics, organic waster, and metals, or meet a lawfully enacted local recycling ordinance, if more restrictive.

Exception: Rural jurisdictions that meet and apply for the exemption in Public Resources Code Section 42649.82 (a)(2)(A) et seq. are note required to comply with the organic waste portion of this section.

DIVISION 4.5 ENVIRONMENTAL QUALITY

SECTION 4.501 GENERAL

4.501.1 Scope
The provisions of this chapter shall outline means of reducing the quality of air contaminants that are odorous, irritating and/or harmful to the comfort and well being of a building's installers, occupants and neighbors.

SECTION 4.502 DEFINITIONS

5.102.1 DEFINITIONS
The following terms are defined in Chapter 2 *(and are included here for reference)*

AGRIFIBER PRODUCTS. Agrifiber products include wheatboard, strawboard, panel substrates and door cores, not including furniture, fixtures and equipment (FF&E) not considered base building elements.

COMPOSITE WOOD PRODUCTS. Composite wood products include hardwood plywood, particleboard and medium density fiberboard. "Composite wood products" does not include hardboard, structural plywood, structural panels, structural composite lumber, oriented strand board, glued laminated timber, prefabricated wood I-joists or finger-jointed lumber, all as specified in California Code of regulations (CCR), title 17, Section 93120.1.

DIRECT-VENT APPLIANCE. A fuel-burning appliance with a sealed combustion system that draws all air for combustion from the outside atmosphere and discharges all flue gases to the outside atmosphere.

MAXIMUM INCREMENTAL REACTIVITY (MIR). The maximum change in weight of ozone formed by adding a compound to the "Base Reactive Organic Gas (ROG) Mixture" per weight of compound added, expressed to hundredths of a gram (g O^3/g ROC).
Note: MIR values for individual compounds and hydrocarbon solvents are specified in CCR, Title 17, Sections 94700 and 94701.

MOISTURE CONTENT. The weight of the water in wood expressed in percentage of the weight of the oven-dry wood.

PRODUCT-WEIGHTED MIR (PWMIR). The sum of all weighted-MIR for all ingredients in a product subject to this article. The PWMIR is the total product reactivity expressed to hundredths of a gram of ozone formed per gram of product (excluding container and packaging).
Note: PWMIR is calculated according to equations found in CCR, Title 17, Section 94521 (a).

REACTIVE ORGANIC COMPOUND (ROC). Any compound that has the potential, once emitted, to contribute to ozone formation in the troposphere.

VOC. A volatile organic compound (VOC) broadly defined as a chemical compound based on carbon chains or rings with vapor pressures greater than 0.1 millimeters of mercury at room temperature. These compounds typically contain hydrogen and may contain oxygen, nitrogen and other elements. See CCR Title 17, Section 94508(a).

4.503 FIREPLACES

4.503.1 GENERAL. Any installed gas fireplace shall be a direct-vent sealed-combustion type. Any installed woodstove or pellet stove shall comply with U.S. EPA New Source Performance Standards (NSPS) emission limits as applicable, and shall have a permanent label indicating they are certified to meet the emission limits. Woodstoves, pellet stoves and fireplaces shall also comply with applicable local ordinances.

4.504 POLLUTANT CONTROL

4.504.1 COVERING OF DUCT OPENINGS & PROTECTION OF MECHANICAL EQUIPMENT DURING CONSTRUCTION. At the time of rough installation, during storage on the construction site and until final startup of the heating, cooling and ventilating equipment, all duct and other related air distribution component openings shall be covered with tape, plastic, sheet metal or other methods acceptable to the enforcing agency to reduce the amount of water, dust or debris which may enter the system.

4.504.2 FINISH MATERIAL POLLUTANT CONTROL. Finish materials shall comply with this section.

4.504.2.1 Adhesives, Sealants and Caulks. Adhesives, sealant and caulks used on the project shall meet the requirements of the following standards unless more stringent local or regional air pollution or air quality management district rules apply:

1. Adhesives, adhesive bonding primers, adhesive primers, sealants, sealant primers and caulks shall comply with local or regional air pollution control or air quality management district rules where applicable or SCAQMD Rule 1168 VOC limits, as shown in Table 4.504.1 or 4.504.2, as applicable. Such products also shall comply with the Rule 1168 prohibition on the use of certain toxic compounds (chloroform, ethylene dichloride, methylene chloride, perchloroethylene and trichloroethylene), except for aerosol products, as specified in Subsection 2 below.
2. Aerosol adhesives, and smaller unit sizes of adhesives, and sealant or caulking compounds (in units of product, less packaging, which do not weigh more than 1 pound and do not consist of more than 16 fluid ounces) shall comply with statewide VOC standards and other requirements, including prohibitions on use of certain toxic compounds, of *California Code of Regulations*, Title 17, commencing with section 94507.

4.504.2.2 Paints and Coatings. Architectural paints and coatings shall comply with VOC limits in Table 1 of the ARB Architectural Coatings Suggested Control Measure, as shown in Table 4.504.3, unless more stringent local limits apply. The VOC content limit for coatings that do not meet the definitions for the specialty coatings categories listed in Table 4.504.3 shall be determined by classifying the coating as a Flat, Nonflat or Nonflat-High Gloss coating, based on its gloss, as defined in subsections 4.21, 4.36, and 4.37 of the 2007 California Air Resources Board, Suggested Control Measure, and the corresponding Flat, Nonflat or Nonflat-High Gloss VOC limit in Table 4.504.3 shall apply.

4.504.2.3 Aerosol Paints and Coatings. Aerosol paints and coatings shall meet the Product-weighted MIR Limits for ROC in Section 94522(a)(2) and other requirements, including prohibitions on use of certain toxic compounds and ozone depleting substances, in Sections 94522(e)(1) and (f)(1) of *California Code of Regulations*, Title 17, commencing with Section 94520; and in areas under the jurisdiction of the Bay Area Air Quality Management District additionally comply with the percent VOC by weight of product limits of Regulation 8, Rule 49.

4.504.2.4 Verification. Verification of compliance with this section shall be provided at the request of the enforcing agency. Documentation may include, but is not limited to, the following:

1. Manufacturer's product specification.
2. Field verification of on-site product containers.

TABLE 4.504.1 - ADHESIVE VOC LIMIT[1,2]
(Less Water and Less Exempt Compounds in Grams per Liter)

ARCHITECTURAL APPLICATIONS	VOC LIMIT
INDOOR CARPET ADHESIVES	50
CARPET PAD ADHESIVES	50
OUTDOOR CARPET ADHESIVES	150
WOOD FLOORING ADHESIVES	100
RUBBER FLOOR ADHESIVES	60
SUBFLOOR ADHESIVES	50
CERAMIC TILE ADHESIVES	65
VCT & ASPHALT TILE ADHESIVES	50
DRYWALL & PANEL ADHESIVES	50
COVE BASE ADHESIVES	50
MULTIPURPOSE CONSTRUCTION ADHESIVE	70
STRUCTURAL GLAZING ADHESIVES	100
SINGLE-PLY ROOF MEMBRANE ADHESIVES	250
OTHER ADHESIVES NOT LISTED	50
SPECIALTY APPLICATIONS	
PVC WELDING	510
CPVC WELDING	490
ABS WELDING	325
PLASTIC CEMENT WELDING	250
ADHESIVE PRIMER FOR PLASTIC	550
CONTACT ADHESIVE	80
SPECIAL PURPOSE CONTACT ADHESIVE	250
STRUCTURAL WOOD MEMBER ADHESIVE	140
TOP & TRIM ADHESIVE	250
SUBSTRATE SPECIFIC APPLICATIONS	
METAL TO METAL	30
PLASTIC FOAMS	50
POROUS MATERIAL (EXCEPT WOOD)	50
WOOD	30
FIBERGLASS	80

1. IF AN ADHESIVE IS USED TO BOND DISSIMILAR SUBSTRATES TOGETHER, THE ADHESIVE WITH THE HIGHEST VOC CONTENT SHALL BE ALLOWED.

2. FOR ADDITIONAL INFORMATION REGARDING METHODS TO MEASURE THE VOC CONTENT SPECIFIED IN THIS TABLE, SEE SOUTH COAST AIR QUALITY MANAGEMENT DISTRICT RULE 1168.

TABLE 4.504.2 - SEALANT VOC LIMIT
(Less Water and Less Exempt Compounds in Grams per Liter)

SEALANTS	VOC LIMIT
ARCHITECTURAL	250
MARINE DECK	760
NONMEMBRANE ROOF	300
ROADWAY	250
SINGLE-PLY ROOF MEMBRANE	450
OTHER	420
SEALANT PRIMERS	
ARCHITECTURAL	
NON-POROUS	250
POROUS	775
MODIFIED BITUMINOUS	500
MARINE DECK	760
OTHER	750

TABLE 4.504.3 - VOC CONTENT LIMITS FOR ARCHITECTURAL COATINGS[2,3]
GRAMS OF VOC PER LITER OF COATING, LESS WATER & LESS EXEMPT COMPOUNDS

COATING CATEGORY	VOC LIMIT
FLAT COATINGS	50
NON-FLAT COATINGS	100
NONFLAT-HIGH GLOSS COATINGS	150
SPECIALTY COATINGS	
ALUMINUM ROOF COATINGS	400
BASEMENT SPECIALTY COATINGS	400
BITUMINOUS ROOF COATINGS	50
BITUMINOUS ROOF PRIMERS	350
BOND BREAKERS	350
CONCRETE CURING COMPOUNDS	350
CONCRETE/MASONRY SEALERS	100
DRIVEWAY SEALERS	50
DRY FOG COATINGS	150
FAUX FINISHING COATINGS	350
FIRE RESISTIVE COATINGS	350
FLOOR COATINGS	100
FORM-RELEASE COMPOUNDS	250
GRAPHIC ARTS COATINGS (SIGN PAINTS)	500
HIGH TEMPERATURE COATINGS	420
INDUSTRIAL MAINTENANCE COATINGS	250
LOW SOLIDS COATINGS[1]	120
MAGNESITE CEMENT COATINGS	450
MASTIC TEXTURE COATINGS	100
METALLIC PIGMENTED COATINGS	500
MULTICOLOR COATINGS	250
PRETREATMENT WASH PRIMERS	420
PRIMERS, SEALERS, & UNDERCOATERS	100
REACTIVE PENETRATING SEALERS	350
RECYCLED COATINGS	250
ROOF COATINGS	50
RUST PREVENTATIVE COATINGS	250
SHELLACS	
CLEAR	730
OPAQUE	550
SPECIALTY PRIMERS, SEALERS & UNDERCOATERS	100
STAINS	250
STONE CONSOLIDANTS	450
SWIMMING POOL COATINGS	340
TRAFFIC MARKING COATINGS	100
TUB & TILE REFINISH COATINGS	420
WATERPROOFING MEMBRANES	250
WOOD COATINGS	275
WOOD PRESERVATIVES	350
ZINC-RICH PRIMERS	340

1. GRAMS OF VOC PER LITER OF COATING, INCLUDING WATER & EXEMPT COMPOUNDS

2. THE SPECIFIED LIMITS REMAIN IN EFFECT UNLESS REVISED LIMITS ARE LISTED IN SUBSEQUENT COLUMNS IN THE TABLE.

3. VALUES IN THIS TABLE ARE DERIVED FROM THOSE SPECIFIED BY THE CALIFORNIA AIR RESOURCES BOARD, ARCHITECTURAL COATINGS SUGGESTED CONTROL MEASURE, FEB. 1, 2008. MORE INFORMATION IS AVAILABLE FROM THE AIR RESOURCES BOARD.

TABLE 4.504.5 - FORMALDEHYDE LIMITS[1]
MAXIMUM FORMALDEHYDE EMISSIONS IN PARTS PER MILLION

PRODUCT	CURRENT LIMIT
HARDWOOD PLYWOOD VENEER CORE	0.05
HARDWOOD PLYWOOD COMPOSITE CORE	0.05
PARTICLE BOARD	0.09
MEDIUM DENSITY FIBERBOARD	0.11
THIN MEDIUM DENSITY FIBERBOARD[2]	0.13

1. VALUES IN THIS TABLE ARE DERIVED FROM THOSE SPECIFIED BY THE CALIF. AIR RESOURCES BOARD, AIR TOXICS CONTROL MEASURE FOR COMPOSITE WOOD AS TESTED IN ACCORDANCE WITH ASTM E 1333. FOR ADDITIONAL INFORMATION, SEE CALIF. CODE OF REGULATIONS, TITLE 17, SECTIONS 93120 THROUGH 93120.12.

2. THIN MEDIUM DENSITY FIBERBOARD HAS A MAXIMUM THICKNESS OF 5/16" (8 MM).

4.504.3 CARPET SYSTEMS. All carpet installed in the building interior shall meet the testing and product requirements of at least one of the following:

1. Carpet and Rug Institute's Green Label Plus Program.
2. California Department of Public Health, "Standard Method for the Testing and Evaluation of Volatile Organic Chemical Emissions from Indoor Sources Using Environmental Chambers" Version 1.1, February 2010 (also known as Specification 01350).
3. NSF/ANSI 140 at the Gold level.
4. Scientific Certifications Systems Indoor Advantagenx Gold.

4.504.3.1 Carpet cushion. All carpet cushion installed in the building interior shall meet the requirements of the Carpet and Rug Institute's Green Label program.

4.504.3.2 Carpet adhesive. All carpet adhesive shall meet the requirements of Table 4.504.1.

4.504.4 RESILIENT FLOORING SYSTEMS. Where resilient flooring is installed , at least 80% of floor area receiving resilient flooring shall comply with one or more of the following:

1. Products compliant with the California Department of Public Health, "Standard Method for the Testing and Evaluation of Volatile Organic Chemical Emissions from Indoor Sources Using Environmental Chambers," Version 1.1, February 2010 (also known as Specification 01350), certified as a CHPS Low-Emitting Material in the Collaborative for High Performance Schools (CHPS) High Performance Products Database.
2. Products certified under UL GREENGUARD Gold (formerly the Greenguard Children & Schools program).
3. Certification under the Resilient Floor Covering Institute (RFCI) FloorScore program.
4. Meet the California Department of Public Health, "Standard Method for the Testing and Evaluation of Volatile Organic Chemical Emissions from Indoor Sources Using Environmental Chambers", Version 1.1, February 2010 (also known as Specification 01350).

4.504.5 COMPOSITE WOOD PRODUCTS. Hardwood plywood, particleboard and medium density fiberboard composite wood products used on the interior or exterior of the buildings shall meet the requirements for formaldehyde as specified in ARB's Air Toxics Control Measure for Composite Wood (17 CCR 93120 et seq.), by or before the dates specified in those sections, as shown in Table 4.504.5

4.504.5.1 Documentation. Verification of compliance with this section shall be provided as requested by the enforcing agency. Documentation shall include at least one of the following:

1. Product certifications and specifications.
2. Chain of custody certifications.
3. Product labeled and invoiced as meeting the Composite Wood Products regulation (see CCR, Title 17, Section 93120, et seq.).
4. Exterior grade products marked as meeting the PS-1 or PS-2 standards of the Engineered Wood Association, the Australian AS/NZS 2269, European 636 3S standards, and Canadian CSA 0121, CSA 0151, CSA 0153 and CSA 0325 standards.
5. Other methods acceptable to the enforcing agency.

4.505 INTERIOR MOISTURE CONTROL

4.505.1 General. Buildings shall meet or exceed the provisions of the *California Building Standards Code*.

4.505.2 CONCRETE SLAB FOUNDATIONS. Concrete slab foundations required to have a vapor retarder by California Building Code, Chapter 19, or concrete slab-on-ground floors required to have a vapor retarder by the California Residential Code, Chapter 5, shall also comply with this section.

4.505.2.1 Capillary break. A capillary break shall be installed in compliance with at least one of the following:

1. A 4-inch (101.6 mm) thick base of 1/2 inch (12.7mm) or larger clean aggregate shall be provided with a vapor barrier in direct contact with concrete and a concrete mix design, which will address bleeding, shrinkage, and curing, shall be used. For additional information, see American Concrete Institute, ACI 302.2R-06.
2. Other equivalent methods approved by the enforcing agency.
3. A slab design specified by a licensed design professional.

4.505.3 MOISTURE CONTENT OF BUILDING MATERIALS. Building materials with visible signs of water damage shall not be installed. Wall and floor framing shall not be enclosed when the framing members exceed 19 percent moisture content. Moisture content shall be verified in compliance with the following:

1. Moisture content shall be determined with either a probe-type or contact-type moisture meter. Equivalent moisture verification methods may be approved by the enforcing agency and shall satisfy requirements found in Section 101.8 of this code.
2. Moisture readings shall be taken at a point 2 feet (610 mm) to 4 feet (1219 mm) from the grade stamped end of each piece verified.
3. At least three random moisture readings shall be performed on wall and floor framing with documentation acceptable to the enforcing agency provided at the time of approval to enclose the wall and floor framing.

Insulation products which are visibly wet or have a high moisture content shall be replaced or allowed to dry prior to enclosure in wall or floor cavities. Wet-applied insulation products shall follow the manufacturers' drying recommendations prior to enclosure.

4.506 INDOOR AIR QUALITY AND EXHAUST

4.506.1 Bathroom exhaust fans. Each bathroom shall be mechanically ventilated and shall comply with the following:

1. Fans shall be ENERGY STAR compliant and be ducted to terminate outside the building.
2. Unless functioning as a component of a whole house ventilation system, fans must be controlled by a humidity control.
   a. Humidity controls shall be capable of adjustment between a relative humidity range less than or equal to 50% to a maximum of 80%. A humidity control may utilize manual or automatic means of adjustment.
   b. A humidity control may be a separate component to the exhaust fan and is not required to be integral (i.e., built-in)

Notes:

1. For the purposes of this section, a bathroom is a room which contains a bathtub, shower or tub/shower combination.
2. Lighting integral to bathroom exhaust fans shall comply with the *California Energy Code*.

4.507 ENVIRONMENTAL COMFORT

4.507.2 HEATING AND AIR-CONDITIONING SYSTEM DESIGN. Heating and air conditioning systems shall be sized, designed and have their equipment selected using the following methods:

1. The heat loss and heat gain is established according to ANSI/ACCA 2 Manual J - 2011 (Residential Load Calculation), ASHRAE handbooks or other equivalent design software or methods.
2. Duct systems are sized according to ANSI/ACCA 1 Manual D - 2014 (Residential Duct Systems), ASHRAE handbooks or other equivalent design software or methods.
3. Select heating and cooling equipment according to ANSI/ACCA 3 Manual S - 2014 (Residential Equipment Selection), or other equivalent design software or methods.

Exception: Use of alternate design temperatures necessary to ensure the system functions are acceptable.

CHAPTER 7
INSTALLER & SPECIAL INSPECTOR QUALIFICATIONS

702 QUALIFICATIONS

702.1 INSTALLER TRAINING. HVAC system installers shall be trained and certified in the proper installation of HVAC systems including ducts and equipment by a nationally or regionally recognized training or certification program. Uncertified persons may perform HVAC installations when under the direct supervision and responsibility of a person trained and certified to install HVAC systems or contractor licensed to install HVAC systems. Examples of acceptable HVAC training and certification programs include but are not limited to the following:

1. State certified apprenticeship programs.
2. Public utility training programs.
3. Training programs sponsored by trade, labor or statewide energy consulting or verification organizations.
4. Programs sponsored by manufacturing organizations.
5. Other programs acceptable to the enforcing agency.

702.2 SPECIAL INSPECTION [HCD]. When required by the enforcing agency, the owner or the responsible entity acting as the owner's agent shall employ one or more special inspectors to provide inspection or other duties necessary to substantiate compliance with this code. Special inspectors shall demonstrate competence to the satisfaction of the enforcing agency for the particular type of inspection or task to be performed. In addition to other certifications or qualifications acceptable to the enforcing agency, the following certifications or education may be considered by the enforcing agency when setting the qualifications of a special inspector:

1. Certification by a national or regional green building program or standard publisher.
2. Certification by a statewide energy consulting or verification organization, such as HERS raters, building performance contractors, and home energy auditors.
3. Successful completion of a third party apprentice training program in the appropriate trade.
4. Other programs acceptable to the enforcing agency.

Notes:
1. Special inspectors shall be independent entities with no financial interest in the materials or the project they are inspecting for compliance with this code.
2. HERS raters are special inspectors certified by the California Energy Commission (CEC) to rate homes in California according to the Home Energy Rating System (HERS).

[BSC] When required by the enforcing agency, the owner or the responsible entity acting as the owner's agent shall employ one or more special inspectors