Client Logo

1215 WELCH ROAD RESEARCH BUILDING

1215 WELCH RD
STANFORD UNIVERSITY - SCHOOL OF MEDICINE

RESUBMITTAL 2 - 2024.04.22

RESUBMITTAL 1 - 2024.02.28

Client Project Number **5548**

ZGF Project Number **P26717**

Package Description

ARCHITECTURAL AND SITE APPROVAL (ASA)

Date

DECEMBER 6, 2024

BUILDING CODE SUMMARY

OCCUPANCY TYPE:

BUSINESS GROUP B: OFFICE, RESEARCH LABS, SERVICE ROOMS (ELECTRICAL, MECHANICAL). CONFERENCE, BREAK ROOMS, AND TERRACES WITH OCCUPANT LOADS OF LESS THAN 50 (CBC 303.1.1)

ASSEMBLY GROUP A-3: CLASSROOM (ACCESSORY OCCUPANCY)
ASSEMBLY GROUP A-2: CAFE (SEPARATED OCCUPANCY)
HAZARD GROUP H-3: CHEMICAL STORAGE ROOMS (SEPARATED OCCUPANCY)

CBC 303.1.2: A ROOM OR SPACE USED FOR ASSEMBLY PURPOSES WITH AN OCCUPANT LOAD OF LESS THAN 50 PERSONS AND ACCESSORY TO ANOTHER OCCUPANCY SHALL BE CLASSIFIED AS GROUP B OCCUPANCY

TYPE OF CONSTRUCTION : II-B

STRUCTURE RATING: REFLECTS LAB CONTROL AREA REQUIREMENTS

PRIMARY STRUCTURE FRAME: 2 HR
FLOOR CONSTRUCTION: 2 HR

BUILDING HEIGHT: 65'-0"
ALLOWABLE HEIGHT: 75' ABOVE GRADE PLANE

ALLOWABLE NUMBER OF STORIES ABOVE GRADE PLANE: 4
ACTUAL NUMBER OF STORIES: 4

BUILDING AREAS:

BASEMENT:	53,917 GSF
LEVEL 1:	35,559 GSF
LEVEL 2:	43,385 GSF
LEVEL 3:	43,127 GSF
LEVEL 4:	27,779 GSF
TOTAL:	203,767 GSF

ALLOWABLE BUILDING AREA AREA PER STORY: 69,000 SF

APPLICABLE CODES, REGULATIONS & ORDINANCES

- 2022 CALIFORNIA BUILDING CODE - TITLE 24 (CBC)
- 2022 CALIFORNIA ELECTRICAL CODE
- 2022 CALIFORNIA MECHANICAL CODE
- 2022 CALIFORNIA PLUMBING CODE
- 2022 CALIFORNIA ENERGY CODE
- 2022 CALIFORNIA GREEN BUILDING STANDARDS CODE
- CALIFORNIA ELEVATOR SAFETY CODE
- CALIFORNIA CODE OF REGULATIONS, TITLE 8
- 2022 CALIFORNIA FIRE CODE
- CALIFORNIA DIVISION OF OCCUPATIONAL SAFETY AND HEATH (CAL/OSHA)
- U.S. ENVIRONMENTAL PROTECTION AGENCY REGULATIONS (EPA)
- SANTA CLARA COUNTY AMENDMENTS TO FIRE AND BUILDING CODES NS1100.125
- 2022 NFPA 13 WITH CALIFORNIA AMENDMENTS
- 2019 NFPA 14 WITH CALIFORNIA AMENDMENTS
- 2022 NFPA 72
- STANFORD UNIVERSITY GENERAL USE PERMIT - APPROVED 12/12/00

FIRE PROTECTION INFORMATION

FIRE SPRINKLER: YES. IN ACCORDANCE WITH 2022 NFPA 13 & SANTA CLARA COUNTY FIRE MARSHAL

LOCAL RESPONSE AREA: CITY OF PALO ALTO

GUP SQUARE FOOTAGE ANALYSIS

* SEE SHEET ASA-G0.03 & ASA-G0.04

ADJACENT BUILDING HEIGHTS

42' - LUCAS CENTER (MSLS)
72' - BMI
62' - CCSR
48' - LOKEY
80' - BECKMAN CENTER
72' - LKSC
0' - LOADING DOCK IS BELOW GRADE

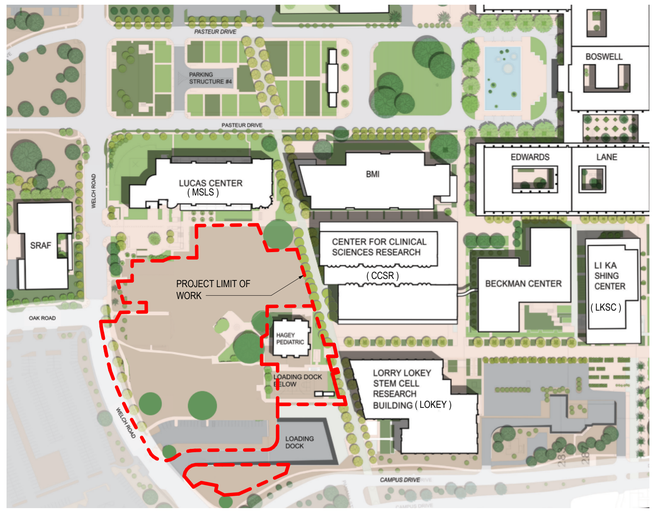

ILLUSTRATION OF STANFORD CAMPUS PLAN - NTS

PROJECT DESCRIPTION

Stanford seeks Architectural and Site Approval for the development of a new biomedical research laboratory building at 1215 Welch Road. This project creates new facilities to allow existing occupants and programs to relocate from aging facilities associated with the Stanford School of Medicine. The project also proposes demolition of the existing Hagey building after staff, support materials, and equipment have been relocated to the new building.

The new 3.5 story biomedical research building constructed over one level below grade will utilize approximately 184,000 SF GUP square footage. Located south of the existing Lucas Center, the building site is bounded by Welch Road to the west, Governor's Lane to the east and the existing below grade School of Medicine central loading facility (loading dock) to the south and east. Principal functions and spaces in this building will include research laboratories, offices, administrative spaces, cafe, and meeting spaces.

The building form, aesthetic, and materiality are consistent with the Architectural Kit of Parts that has been employed throughout the School of Medicine and adjacent parts of West Campus for the past two decades. The massing, height, and flat roof are consistent with the surrounding structures. The building fenestration is a direct expression of the highly repetitive interior planning module, comprised predominantly of research laboratories and associated write-up spaces. Collaborative spaces (conference rooms, break rooms, and exterior terraces) are located in the northeast and northwest corners of the building, to capitalize on indirect natural light and views of the surrounding landscape. The majority of the building is clad in a combination of buff colored terra cotta panel and high-performance glazing in a simple and a rectilinear expression facing outward toward Campus Drive and Welch Road. The North Façade undulates in order to engage and activate social interaction along Discovery Walk - the primary pedestrian/ bicycle path for the School of Medicine. This North Façade is expressed in curvilinear glazing, consistent with the expression of "gateway" found at other buildings in the neighborhood (e.g. CCSR, Clark Center, ChEM-H / SNI Complex). The most communal amenity spaces (café and large classroom) are located at grade along Discovery Walk and clad with red terra cotta panel, consistent with the Kit of Parts (e.g. Friederich Center, and Huang Center, Biomedical Innovations Building, Center for Academic Medicine). The result is a unified expression and pedestrian experience along the path through the heart of the School of Medicine, while maintaining consistency of expression at the campus edge.

The proposal includes landscaped areas to the north, east, south and west of the new building and the extension of Discovery Walk to meet Welch Road. The building will be linked to the existing Stanford service tunnel network through the existing School of Medicine central loading facility to the east by a new connection.

The project requires redistribution of approximately 55,000 academic sf from the DAPER/Administrative development district to the Campus Center development District.

This proposal includes the removal of 55 surface parking spaces, mostly consisting of 20-minute loading and service vehicle parking that were associated with prior use on the site. Future occupants of the building are already working in adjacent buildings and would continue to use the same transportation and parking services. The proposed project does not accommodate any vehicle parking onsite. Any vehicles that were parked in the surface lot have been redistributed across the campus in existing parking facilities in and around the project site. There are multiple commuter parking facilities nearby, including the Stock Farm Garage and the Stock Farm north and south lots, which are available to employees of the new Biomedical Research Laboratory building. They will also continue to have access to the university's robust TDM program to take alternative modes of transportation to campus, including multiple Marguerite routes with stops along Welch Road and Campus Drive. In general, the circulation and access associated with the proposed project would not be altered from current conditions.

Service vehicles for the new Biomedical Research Laboratory building will be accessing the adjacent School of Medicine loading dock and servicing the building through the new loading dock connection in the basement of the building. Operationally, the building will have secured 24/7 access for roughly 600 -800 medical researchers with a typical 8am-6pm Monday through Friday workday window for most occupants. A ground floor classroom with seats for 45 medical research graduate students/faculty/staff will be a resource for the School of Medicine. A public café with a code occupancy of 53 maximum people will be an amenity facing the new Discovery Walk extension, activating the ground floor of the building. This café will be similar to other small cafes on campus, geared toward providing convenient food options so people can stay on campus for coffee and lunch breaks. The menu will include grab and go items as well as menu items that can be prepared quickly.

The extension of Discovery Walk will allow a clear pedestrian circulation path through the School of Medicine campus that will also serve as an emergency fire lane. New site amenities accessible to building occupants and campus occupants from the path include outdoor benches and seating for informal meetings, reading, and networking events. A basketball half court and exercise equipment for casual recreation are provided to promote wellness. (No collegiate sports events will occur here.) Additionally, on the west there is a 'Sky Garden' patio below grade in a terraced area which also brings daylight into the lower level spaces. See the project landscape drawings for a more detailed narrative and keyed site plan.

The project includes removal of 3 protected oak trees and proposes planting 9 replacement trees at campus areas near the project site. See project drawings for the site Tree Disposition & Protection Plan for details.

SITE DATA INFORMATION

OWNER: LELAND STANFORD JR. UNIVERSITY

STANFORD PROJECT NUMBER: 5548

BUILDING NUMBER: 07-545

PROJECT ADDRESS: 1215 WELCH RD, STANFORD, CA 94305

APN : 142-05-045

PROJECT PHASING AND PERMITTING

PROJECT REQUIRES MULTIPLE PHASES AND PERMITS TO WORK AROUND THE EXISTING HAGEY BUILDING WHICH WILL BE OCCUPIED UNTIL THE NEW BUILDING IS READY.

* SEE SHEET ASA-G0.06 FOR PHASING AND PERMITTING STRATEGY

GRADING QUANTITIES

* SEE CIVIL SHEET ASA-C3.01

PROJECT DIRECTORY

OWNER: STANFORD UNIVERSITY
DEPARTMENT OF PROJECT MANAGEMENT
560 FREMONT RD.
STANFORD, CA 94305
CONTACT: BIJENDRA SEWAK
PHONE: 650.725.9262
EMAIL: bsewak@stanford.edu

CONTRACTOR: WHITING-TURNER CONTRACTING COMPANY
4690 CHABOT DRIVE, SUITE 120
PLEASANTON, CA 94588
CONTACT: OWEN BARCELONA
PHONE: 925.580.8424
EMAIL: owen.barcelona@Whiting-Turner.com

ARBORIST: MONARCH LANDSCAPE COMPANY
1250 AMES AVE
MILPITAS, CA 95035
CONTACT: AMBER GRAVES ALVARES
PHONE: 925.519.7262
EMAIL: amber.graves@monarchlandscape.com

ARCHITECT: ZGF ARCHITECTS LLP
1223 SW WASHINGTON STREET, SUITE 200
PORTLAND, OREGON 97205
CONTACT: TYLER ASHWORTH
PHONE: 503.863.2274
EMAIL: tyler.ashworth@zgf.com

CIVIL ENGINEER: BKF ENGINEERS
7901 STONERIDGE DR, SUITE 360
PLEASANTON, CA 94588
CONTACT: STEVE REYNOLDS
PHONE: 925.396.7700
EMAIL: sreynolds@bkf.com

LANDSCAPE: INTERSTICE ARCHITECTS
1173 SUTTER ST
SAN FRANCISCO CA 94109
CONTACT: ZOEE ASTRACHAN
PHONE: 415.285.3960
EMAIL: za@intersticearchitects.com

LIGHTING: INTERFACE ENGINEERING
1999 HARRISON ST SUITE 550
OAKLAND, CA 94612
CONTACT: KRISTINA SANTI
PHONE: 415.489.3229
EMAIL: KristinaS@interfaceeng.com

ASA SHEET LIST

ASA-G0.00	COVER PAGE
ASA-G0.01	EXISTING SITE PHOTOS
ASA-G0.02	EXISTING SITE PHOTOS
ASA-G0.03	STANFORD GUP TRACKING SHEET
ASA-G0.03A	GUP CHECKLIST
ASA-G0.04	GUP AREA CALCULATIONS NEW BUILDING
ASA-G0.05	BUILDING GROSS AREAS
ASA-G0.06	PROJECT SEQUENCE NARRATIVE
ASA-G0.07	PROJECT SEQUENCING DIAGRAMS
ASA-G0.08	CONSTRUCTION LOGISTICS PLANS
ASA-G0.09	EXISTING BUILDINGS CONTEXT

ASA-C1.00	EXISTING TOPOGRAPHIC SURVEY
ASA-C1.01	EXISTING SITE UTILITIES
ASA-C2.00	SURFACE DEMOLITION PLAN
ASA-C2.01	UTILITY DEMOLITION PLAN
ASA-C3.00	GRADING AND DRAINAGE PLAN
ASA-C3.01	EARTHWORK AND SECTIONS
ASA-C3.02	SECTIONS
ASA-C3.03	SECTIONS
ASA-C3.04	SECTIONS
ASA-C4.00	UTILITY PLAN
ASA-C5.00	STORMWATER CONTROL PLAN
ASA-C6.00	HORIZONTAL CONTROL PLAN
ASA-C7.00	PAVING AND STRIPING PLAN
ASA-C8.00	EROSION CONTROL PLAN
ASA-C8.01	EROSION CONTROL DETAILS BMP-1
ASA-C8.02	EROSION CONTROL DETAILS BMP-2
ASA-C9.00	CIVIL CONSTRUCTION DETAILS
ASA-C9.01	CIVIL CONSTRUCTION DETAILS
ASA-C9.02	CIVIL CONSTRUCTION DETAILS
ASA-C9.03	CIVIL CONSTRUCTION DETAILS
ASA-C9.04	CIVIL CONSTRUCTION DETAILS
ASA-C9.05	CIVIL CONSTRUCTION DETAILS
ASA-C9.06	CIVIL CONSTRUCTION DETAILS
ASA-C9.07	CIVIL CONSTRUCTION DETAILS
ASA-C10.00	FIRE ACCESS PLAN-FULL BUILDOUT
ASA-C10.01	FIRE ACCESS PLAN-INTERIM CONDITION

ASA-L0.00	LANDSCAPE GENERAL NOTES AND INDEX
ASA-L0.10	LANDSCAPE MATERIAL & PLANTING SCHEDULES
ASA-L1.00	TREE DISPOSITION & PROTECTION PLAN
ASA-L2.00	LANDSCAPE MATERIAL PLAN
ASA-L2.00A	LANDSCAPE PLAN PHASE A
ASA-L2.00B	LANDSCAPE PLAN PHASE B
ASA-L2.10	LANDSCAPE SOIL & TREE PLAN
ASA-L2.20	LANDSCAPE UNDERSTORY PLANTING PLAN
ASA-L7.00	IRRIGATION GENERAL NOTES & LEGEND
ASA-L7.10	IRRIGATION PLAN
ASA-L7.20	IRRIGATION DETAILS
ASA-L7.21	IRRIGATION DETAILS

ASA-EL0.02	LUMINAIRE SCHEDULE
ASA-ELD1.01	DEMOLITION PLAN, SITE-LIGHTING

ASA-EL1.01	PLAN, SITE - LIGHTING
ASA-EL1.02	PLAN, SITE - LIGHTING PHOTOMETRIC CALCULATION

ASA-A1.00	OVERALL SITE PLAN SCOPE OF WORK
ASA-A1.01	BASEMENT PLAN
ASA-A1.02	LEVEL 1 PLAN
ASA-A1.03	LEVEL 2 PLAN
ASA-A1.04	LEVEL 3 PLAN
ASA-A1.05	LEVEL 4 PLAN
ASA-A1.06	ROOF PLAN
ASA-A3.03	ELEVATIONS, EXTERIOR NS
ASA-A3.04	ELEVATIONS, EXTERIOR EW

ZGF
ZIMMER GUNSUL FRASCA ARCHITECTS LLP

DENVER
LOS ANGELES
NEW YORK
PORTLAND
SEATTLE
WASHINGTON, DC
VANCOUVER, BC

1223 SW Washington Street
Suite 200
Portland, OR 97205
503.224.3860
www.zgf.com

ZGF Project Number P26717.wrss

Consultant

Full Design Team Roster on Cover Sheet

Client and Project Information

Stanford MEDICINE

1215 Welch Road

Original Issue
ASA SUBMITTAL 12.06.2024

Revisions
RESUBMITTAL 02.28.2025
RESUBMITTAL 04.22.2025

Key Plan and Orientation

Sheet Status

Sheet Title
COVER PAGE

Sheet Number
ASA-G0.00

Current Issue
ASA SUBMITTAL

Current Issue Date
12.06.2024

Sheet Size: 24 x 36 | 0" | 1" | 2" | 4/29/2025 4:48:54 PM

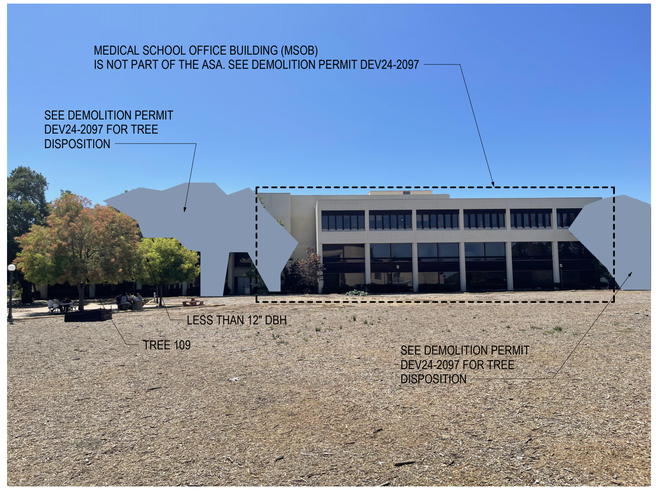

1 NORTH ELEVATION - EAST END

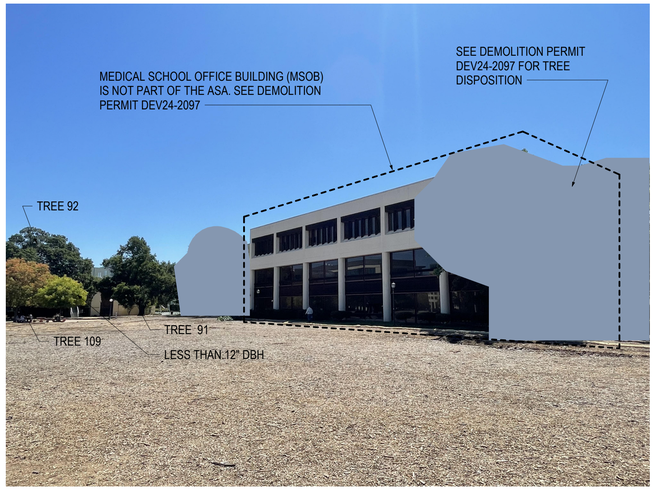

2 NORTH ELEVATION - WEST END

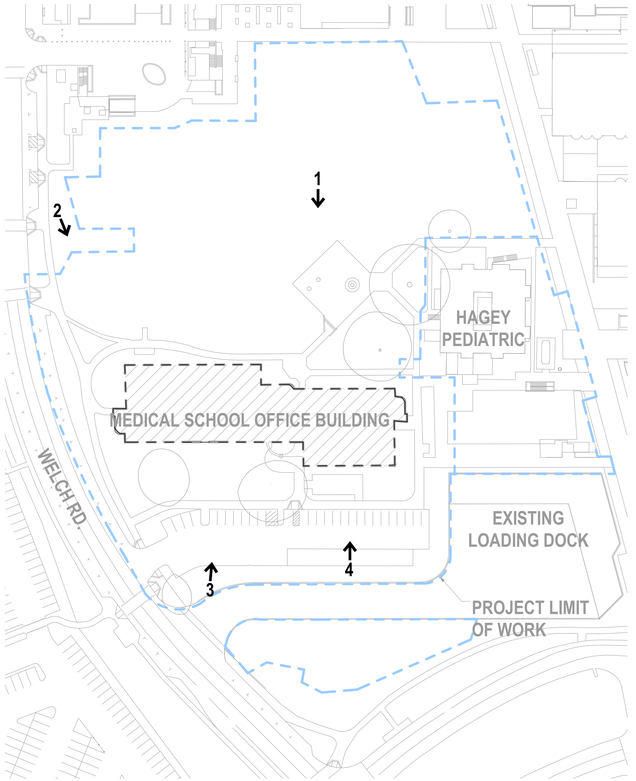

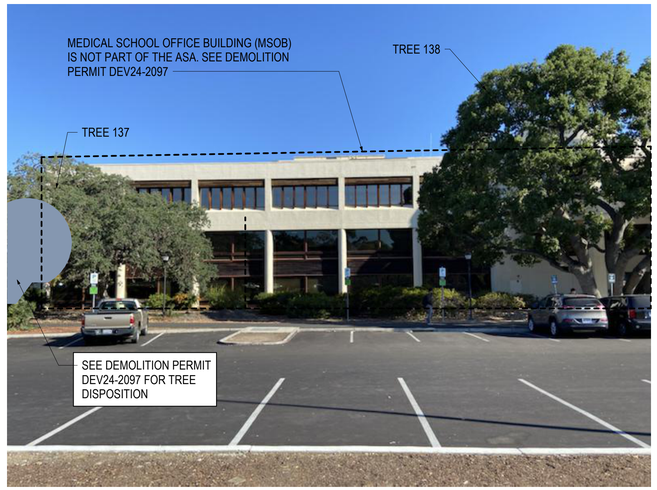

3 SOUTH ELEVATION - WEST END

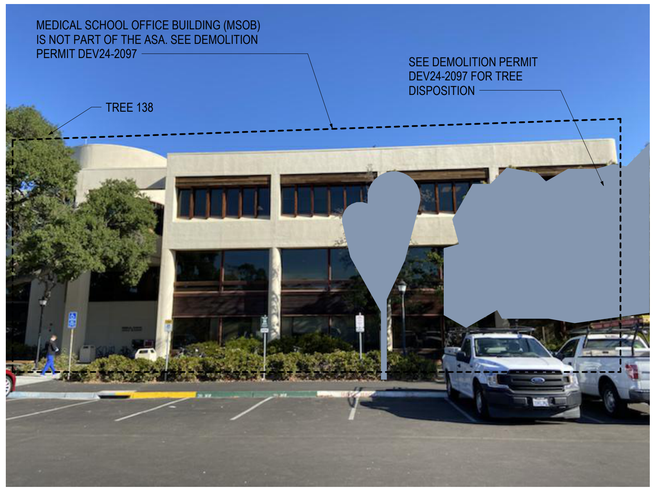

4 SOUTH ELEVATION - EAST END

Sheet Size: 24 x 36

2" 1" 0"

ZGF
ZIMMER GUNSUL FRASCA ARCHITECTS LLP

DENVER
LOS ANGELES
NEW YORK
PORTLAND
SEATTLE
WASHINGTON, DC
VANCOUVER, BC

1223 SW Washington Street
Suite 200
Portland, OR 97205
503.224.3860
www.zgf.com

ZGF Project Number P26717.wrss

Consultant

Full Design Team Roster on Cover Sheet

Client and Project Information

Stanford MEDICINE

1215 Welch Road

Original Issue
ASA SUBMITTAL 12.06.2024

Revisions
RESUBMITTAL 02.28.2025

Key Plan and Orientation

Sheet Status

Sheet Title
EXISTING SITE PHOTOS

Sheet Number
ASA-G0.01

Current Issue
ASA SUBMITTAL

Current Issue Date
12.06.2024

1 BASKETBALL COURT - LOOKING WEST TO MSOB

2 LOOKING NORTHWEST - TOWARDS TREE 91 & 92

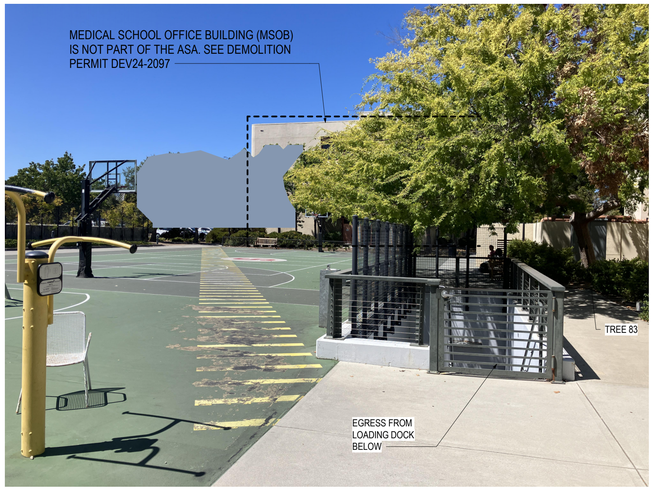

3 LOOKING WEST ACROSS BASKETBALL COURT & LOADING DOCK STAIR

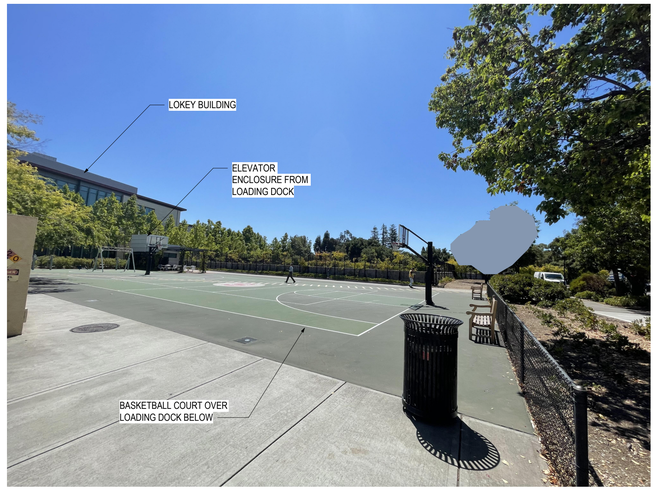

4 LOOKING SOUTHEAST ACROSS BASKETBALL COURT

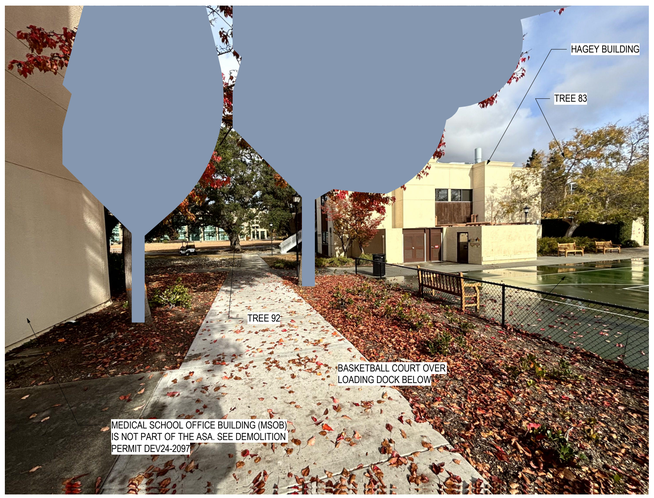

6 LOOKING NORTH TO HAGEY AND TREE 92

5 WELCH ROAD SIDEWALK AND UTILITIES

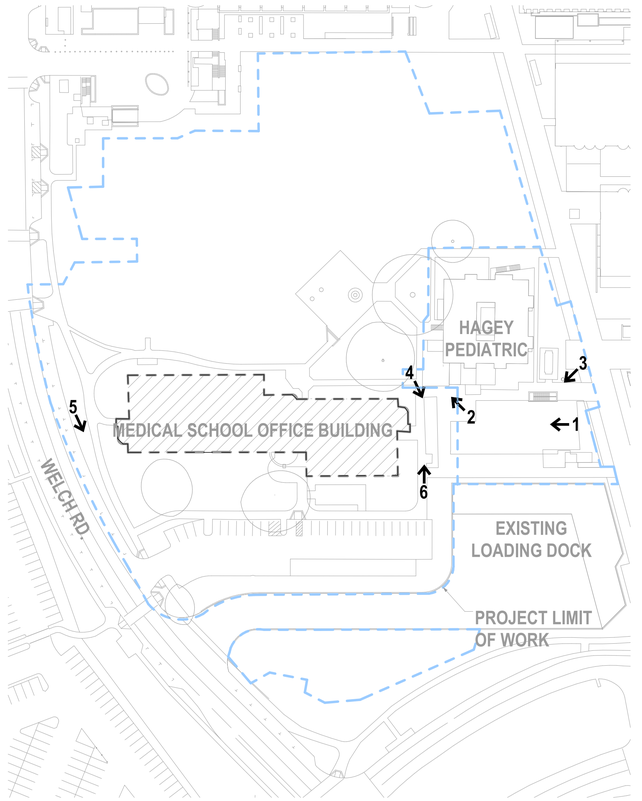

Sheet Size: 24 x 36

0" 1" 2'

ZGF
ZIMMER GUNSUL FRASCA ARCHITECTS LLP

DENVER
LOS ANGELES
NEW YORK
PORTLAND
SEATTLE
WASHINGTON, DC
VANCOUVER, BC

1223 SW Washington Street
Suite 200
Portland, OR 97205
503.224.3860
www.zgf.com

ZGF Project Number P26717.wrss

Consultant

Full Design Team Roster on Cover Sheet

Client and Project Information

Stanford MEDICINE

1215 Welch Road

Original Issue
ASA SUBMITTAL 12.06.2024

Revisions
RESUBMITTAL 02.28.2025

Key Plan and Orientation

Sheet Status

Sheet Title
EXISTING SITE PHOTOS

Sheet Number
ASA-G0.02

Current Issue
ASA SUBMITTAL

Current Issue Date
12.06.2024

LAND BUILDINGS & REAL ESTATE
Land Use & Environmental Planning

Stanford

February 27th, 2025

Ms. Charu Ahluwalia
Santa Clara County Planning Office
70 West Hedding, East Wing, 7th floor
San Jose, CA 95110

Re: Redistribution of GUP sf from the Department of Athletics, Physical Education, and Recreation (DAPER)/Administrative Development District to the Campus Center Development District for the Biomedical Research Laboratory Building Project

Dear Charu:

This letter documents the redistribution of GUP sf from the DAPER/Administrative to the Campus Center Development District, supporting the application of the Biomedical Research Laboratory Building project at 1215 Welch Road. The Biomedical Research Laboratory will be a new 184,830 academic sf building, affiliated with the Stanford School of medicine.

As reported in Annual Report 23, there were 47,286 sf remaining in the Campus Center Development District. Since then, the County has approved demolition permits for the Tree modulars, Bambi modulars and Medical School Office Building, that has credited 82,802 GUP sf to the Campus Center District. Therefore, 129,376 sf currently remains in the Campus Center Development District. To construct the 184,830 sf new Biomedical Research Laboratory Building in this district, 55,454 sf would need to be redistributed to the Campus Center Development District from the DAPER/Administrative Development District.

The Campus Center Development District was allocated 1,605,000 academic sf at the beginning of the 2000 GUP. Per GUP Condition E.2.a, this amount can now be increased by up to 20% or 20,000 square feet, whichever is greater, without requiring environmental assessment as specified in Condition D.6 or Planning Commission approval.

Redistribution of 55,454 sf for the new Biomedical Research Laboratory Building would not exceed 20% of the academic sf allocated to Campus Center (i.e. 321,000 academic sf), which is the limit prescribed in Condition E.2.a, and therefore no additional environmental review and no Planning Commission approval would be required for this redistribution.

Thank you for your attention to this.

Ramya Subramanian
Ramya Subramanian, LEED AP
Senior Planner
Land Use and Environmental Planning

cc: Bijendra Sewak

Attachment A - Development District GUP tracking sheet

Sheet Size: 24 x 36 | 0" | 1" | 2"

Attachment A

2000 GUP DEVELOPMENT DISTRICTS SF TRACKING SHEET

Last Updated by Stanford LUEP 2/27/2025

Building Permits Approved in FY 16

Development District	Campus Center	DAPER & Administrative	East Campus	Quarry	Lathrop	West Campus	Foothills	Lagunita	Arboretum	San Juan	Total	Notes
2000 GUP Building Area Distribution (gsf)	1,605,000	250,000	110,000	50,000	20,000	0	0	0	0	0	**2,035,000**	
GUP Building Area Distribution at the end of FY 16 (allocation)	1,389,337	370,000	109,136	50,000	20,000	16,795	4,732	75,000	0	0	**2,035,000**	
ASA Approved Space in AR 16	24,408	-1,508	0	0	0	0	0	0	0	0	**22,900**	
Building Permit Approved Space in AR 16	6,518	-1,508	0	0	0	0	0	0	0	0	**5,010**	
Previous ARs Cumulative Building Permit Approvals	978,506	364,681	-38,112	0	0	16,078	3,192	73,195	0	0	**1,397,540**	
Cumulative Total Building Permits Approved	**985,024**	**363,173**	**-38,112**	**0**	**0**	**16,078**	**3,192**	**73,195**	**0**	**0**	**1,402,550**	
GUP Balance Remaining at end of FY 16	**404,313**	**6,827**	**147,248**	**50,000**	**20,000**	**717**	**1,540**	**1,805**	**0**	**0**	**632,450**	
Change in Regional Loading Dock Project	82										**82**	Project approved in FY 15 - Additional sf from Building Permit stage Construction changed from 2,284 to 2,366 sf. No change in demolition. Full project not listed here because demo and construction already recorded before FY 16. In App C, AR 16 includes the change of 82 sf. Table 5 of the Body of AR 18 includes a footnote to explain this.
Building Permit Approved Space in AR 16	6,600	-1,508	0	0	0	0	0	0	0	0	**5,092**	
Cumulative Total Building Permits Approved (edited for AR 18)	**985,106**	**363,173**	**-38,112**	**0**	**0**	**16,078**	**3,192**	**73,195**	**0**	**0**	**1,402,632**	
GUP Balance Remaining at end of FY 16 (edited for AR 18)	**404,231**	**6,827**	**147,248**	**50,000**	**20,000**	**717**	**1,540**	**1,805**	**0**	**0**	**632,368**	

Building Permits Approved in FY 17

Development District	Campus Center	DAPER & Administrative	East Campus	Quarry	Lathrop	West Campus	Foothills	Lagunita	Arboretum	San Juan	Total	Notes
Home of Champions		2,440									2,440	
Golf Learning Center								295			295	Was incorrectly placed in DAPER District in Jan 2018 version of this tracking sheet.
CHEM-H & SNI	210,940										210,940	Updated 10/21/19 from 210,946 to 210,940 sf.
Educational Farm Huffington Barn (Redistr.)			546			(546)					0	Redistribution from EC to WC
Educational Farm Huffington Barn						1,263					1,263	
Deming House (Redistr.)			16,490					(16,490)			0	Redistribution from EC to Lag
Deming House								16,471			16,471	Updated 7/30/18 from 16,451 to 16,471 sf. In App C, AR 17 is updated to include this change. Table 5 of the Body of AR 18 includes a footnote to explain this.
Frost Amphitheater renovations	9,707										9,707	
Organic Chem demolition	(14,270)										(14,270)	
Bunair Huts for East Campus Utilities		(11,785)									(11,785)	
GUP Building Area Distribution at the end of FY 16 (allocation)	**1,389,337**	**370,000**	**92,100**	**50,000**	**20,000**	**17,341**	**4,732**	**91,490**	**0**	**0**	**2,035,000**	
Building Permits Approved in FY 2017	**206,377**	**(5,345)**	**0**	**0**	**0**	**1,263**	**0**	**16,766**	**0**	**0**	**215,061**	
Cumulative Total Building Permits Approved	**1,191,463**	**353,828**	**(38,112)**	**0**	**0**	**17,341**	**3,192**	**89,961**	**0**	**0**	**1,617,693**	
Balance at end of FY 2017	**197,854**	**16,172**	**130,212**	**50,000**	**20,000**	**0**	**1,540**	**1,529**	**0**	**0**	**417,307**	

Building Permits Approved in FY 18

Development District	Campus Center	DAPER & Administrative	East Campus	Quarry	Lathrop	West Campus	Foothills	Lagunita	Arboretum	San Juan	Total	Notes
CCSC Child Care Center (demolitions)		(10,945)	(5,799)								(16,744)	Approved 7/13/17.
CCSC Child Care Center (construction)			13,847								13,847	Also see "Other SF" tab. Will be using more childcare sf - updated 1/23/2019.
Golf 10th Tee (Demolition sf Storage shed) - ASA Modification							(199)				(199)	Previously demolition of 113 sf and construction of 113 sf, therefore net zero change.
Golf 10th Tee Restroom (Construction)							142				142	Previously demolition of 113 sf and construction of 113 sf, therefore net zero change.
Academic Advising and Rowing Center (Arrillaga Hall)	22,622										22,622	Updated 12/11/20. Was 23,714 sf at ASA and later 23,055 sf.
Environmental Health and Services Expansion	14,087										14,087	Updated 10/3/18. Was 14,305 sf at ASA.
Encina Commons	(4,121)										(4,121)	
Center for Academic Medicine (Redistr.)			115,000	(115,000)							0	Redistribution from EC to Quarry. Approved 11/16/17.
Center for Academic Medicine				152,120							152,120	Updated 11/12/20. Was 153,821 sf at ASA.
Public Safety (Redistribution)		(4,267)	4,267								0	Note: A redistribution of 6,479 sf from EC to DAPER was approved; however this amount is now reduced to 4,267 sf.
Public Safety (demolition)		(2,729)									(2,729)	
Public Safety (construction)		27,196									27,196	Updated 10/1/18
EOC/ECH (Redistribution)		(1,844)						1,844			0	ASA approved 3/1/18. (10/4/18 update) Redistribution from Lagunita to DAPER – reduce amount redistributed from 1,844 to 1,529. Transfer of 1,844 is counted in AR 18.
EOC/ECH (Redistribution amendment)		315						(315)			0	(10/4/18 amendment)
GUP Building Area Distribution at the end of FY 16 (allocation)	**1,389,337**	**375,796**	**-27,167**	**165,000**	**20,000**	**17,341**	**4,732**	**89,961**	**0**	**0**	**2,035,000**	
Building Permits Approved FY 2018	**32,588**	**13,522**	**8,048**	**152,120**	**0**	**0**	**(57)**	**0**	**0**	**0**	**206,221**	For Table 5 of the Annual Report Body.
Cumulative Total Building Permits Approved	**1,224,071**	**367,350**	**(30,064)**	**152,120**	**0**	**17,341**	**3,135**	**89,961**	**0**	**0**	**1,823,914**	For Table 5 of the Annual Report Body.
Balance at end of FY 2018	**165,266**	**8,446**	**2,897**	**12,880**	**20,000**	**0**	**1,597**	**0**	**0**	**0**	**211,086**	

Building Permits approved in FY 19

Development District	Campus Center	DAPER & Administrative	East Campus	Quarry	Lathrop	West Campus	Foothills	Lagunita	Arboretum	San Juan	Total	Notes
District Work Center - Panama	3,926										3,926	
District Work Center - Roth	3,926										3,926	
District Work Center - Memorial	3,926										3,926	
Softball Stadium Improvements		120									120	
Stock Farm Greenhouses (demolition)	(7,832)										(7,832)	
Stock Farm Greenhouses (construction)	8,352										8,352	
GUP Building Area Distribution at the end of FY 19 (allocation)	**1,389,337**	**375,796**	**(27,167)**	**165,000**	**20,000**	**17,341**	**4,732**	**89,961**	**0**	**0**	**2,035,000**	
Building Permits Approved in FY 2019	**12,298**	**120**	**0**	**0**	**0**	**0**	**0**	**0**	**0**	**0**	**12,418**	
Cumulative Total Building Permits	**1,236,369**	**367,470**	**(30,064)**	**152,120**	**0**	**17,341**	**3,135**	**89,961**	**0**	**0**	**1,836,332**	
Future Balance	**152,968**	**8,326**	**2,897**	**12,880**	**20,000**	**0**	**1,597**	**0**	**0**	**0**	**198,668**	

Building Permits approved in FY 20

Development District	Campus Center	DAPER & Administrative	East Campus	Quarry	Lathrop	West Campus	Foothills	Lagunita	Arboretum	San Juan	Total	Notes
Stock Farm Childcare Facility	10,560										10,560	ASA Approved 9/5/19, Does not need building permit
Chemistry Admin Modular	4,082										4,082	BP Approved Winter 2019/20
GUP Building Area Distribution at the end of FY 20 (allocation)	**1,389,337**	**375,796**	**(27,167)**	**165,000**	**20,000**	**17,341**	**4,732**	**89,961**	**0**	**0**	**2,035,000**	
Building Permits Approved in FY 2020	**14,642**	**0**	**0**	**0**	**0**	**0**	**0**	**0**	**0**	**0**	**14,642**	
Cumulative Total Building Permits	**1,251,011**	**367,470**	**(30,064)**	**152,120**	**0**	**17,341**	**3,135**	**89,961**	**0**	**0**	**1,850,974**	
Future Balance	**138,326**	**8,326**	**2,897**	**12,880**	**20,000**	**0**	**1,597**	**0**	**0**	**0**	**184,026**	

Building Permits approved in FY 21

Development District	Campus Center	DAPER & Administrative	East Campus	Quarry	Lathrop	West Campus	Foothills	Lagunita	Arboretum	San Juan	Total	Notes
1215 Welch modulars demolition	(14,340)										(14,340)	Demo permit approved
Mudd Chemistry Demolition	(76,657)										(76,657)	Demo permit approved
Gores building tenant improvement project	776										776	
GUP Building Area Distribution at the end of FY 21 (allocation)	**1,389,337**	**375,796**	**(27,167)**	**165,000**	**20,000**	**17,341**	**4,732**	**89,961**	**0**	**0**	**2,035,000**	
Building Permits Approved in FY 2021	**(90,221)**	**0**	**0**	**0**	**0**	**0**	**0**	**0**	**0**	**0**	**(90,221)**	
Cumulative Total Building Permits	**1,160,790**	**367,470**	**(30,064)**	**152,120**	**0**	**17,341**	**3,135**	**89,961**	**0**	**0**	**1,760,753**	
Future Balance	**228,547**	**8,326**	**2,897**	**12,880**	**20,000**	**0**	**1,597**	**0**	**0**	**0**	**274,247**	

Building Permits approved in FY 22

Development District	Campus Center	DAPER & Administrative	East Campus	Quarry	Lathrop	West Campus	Foothills	Lagunita	Arboretum	San Juan	Total	Notes
Booking Trailer/09-421T (Police Compound demolitions)		(226)										
Operations Trailer/09-422T (Police Compound demolitions)		(665)										
Restroom Trailer/09-423T (Police Compound demolitions)		(444)										
Events/Briefing Building (Bldg. A)/09-425 (Police Compound demolitions)		(2,700)										
Maintenance Building (Bldg. B)/09-430 (Police Compound demolitions)		(1,750)										
Redwood building (Demolition)	(20,495)											
Stadium Restroom Building Demolition - Galvez Restroom		(1,541)										
Stadium Restroom Building Demolition - El Camino Women's Restroom		(1,091)										
Stadium Restroom Building Demolition - El Camino Men's Restroom		(599)										
Stadium Gate Restroom Demolition - Gate 3 Men's Restroom		(414)										
Stadium Gate Restroom Demolition - Gate 7 Men's Restroom		(429)										
Stadium Gate Restroom Demolition - Gate 9 Women's Restroom		(566)										
Stadium Gate Restroom Demolition - Gate 11 Men's Restroom		(414)										
Stadium Gate Restroom Demolition - Gate 13 Women's Restroom		(469)										
CASBS Restroom (Demolition)					(230)						(230)	
CASBS Storage Shed 12-290A (Demolition)					(780)						(780)	
CASBS Storage Shed 12-290B (Demolition)					(741)						(741)	
CASBS Conference Room					1,701						1,701	
Lou Henry Hoover Building (Demolition)	(48,643)										(48,643)	
George P. Shultz Building (Construction)	48,643										48,643	
EOC/ECH (Construction)		6,701									6,701	
GUP Building Area Distribution at the end of FY 22 (allocation)(allocation)	**1,389,337**	**375,796**	**(27,167)**	**165,000**	**20,000**	**17,341**	**4,732**	**89,961**	**0**	**0**	**2,035,000**	(excludes New LBRE Building/Bonair Demo redistributions)
Building Permits Approved in FY 2022	**(20,495)**	**(4,597)**	**0**	**0**	**(50)**	**0**	**0**	**0**	**0**	**0**	**(25,142)**	(excludes New LBRE Building/Bonair Demo redistributions)
Cumulative Total Building Permits	**1,140,295**	**362,873**	**(30,064)**	**152,120**	**(50)**	**17,341**	**3,135**	**89,961**	**0**	**0**	**1,735,611**	
Future Balance	**249,042**	**12,923**	**2,897**	**12,880**	**20,050**	**0**	**1,597**	**0**	**0**	**0**	**299,389**	

Building Permits approved in FY 23

Development District	Campus Center	DAPER & Administrative	East Campus	Quarry	Lathrop	West Campus	Foothills	Lagunita	Arboretum	San Juan	Total	Notes
GSE - North Building (construction)	1,488										1,488	
GSE - Barnum (demolition)	(7,198)										(7,198)	
GSE - South Building (construction)	53,841										53,841	
Bridge Building	153,625										153,625	
GUP Building Area Distribution (allocation)	**1,389,337**	**375,796**	**(27,167)**	**165,000**	**20,000**	**17,341**	**4,732**	**89,961**	**0**	**0**	**2,035,000**	(excludes New LBRE Building/Bonair Demo redistributions)
Building Permits approved in FY 23	**201,756**	**0**	**0**	**0**	**0**	**0**	**0**	**0**	**0**	**0**	**201,756**	(excludes New LBRE Building/Bonair Demo redistributions)
Cumulative Total Building Permits	**1,342,051**	**362,873**	**(30,064)**	**152,120**	**(50)**	**17,341**	**3,135**	**89,961**	**0**	**0**	**1,937,367**	
Future Balance	**47,286**	**12,923**	**2,897**	**12,880**	**20,050**	**0**	**1,597**	**0**	**0**	**0**	**97,633**	

Building Permits approved/to be approved in FY 24

Development District	Campus Center	DAPER & Administrative	East Campus	Quarry	Lathrop	West Campus	Foothills	Lagunita	Arboretum	San Juan	Total	Notes
Tree Modulars (demolition)	(15,600)										(15,600)	
Bambi Modular (demolition)	(11,765)										(11,765)	
LBRE Building (Demolition)		(123,922)									(123,922)	
LBRE Building (Redistribution)		73,000				(73,000)					0	
LBRE Building (Construction)						72,890					72,890	
Maples Pavilion		11,659									11,659	
GUP Building Area Distribution (allocation)	**1,389,337**	**375,796**	**(27,167)**	**165,000**	**20,000**	**90,341**	**4,732**	**89,961**	**0**	**0**	**2,108,000**	(excludes New LBRE Building/Bonair Demo redistributions)
Building Permits approved in FY 24 or to be approved in	**(27,365)**	**(39,263)**	**0**	**0**	**0**	**(110)**	**0**	**0**	**0**	**0**	**(66,738)**	(excludes New LBRE Building/Bonair Demo redistributions)
Cumulative Total Building Permits	**1,314,686**	**323,610**	**(30,064)**	**152,120**	**(50)**	**17,231**	**3,135**	**89,961**	**0**	**0**	**1,870,629**	
Future Balance	**74,651**	**52,186**	**2,897**	**12,880**	**20,050**	**110**	**1,597**	**0**	**0**	**0**	**164,371**	

Building Permits approved/to be approved in FY 25 or later

Development District	Campus Center	DAPER & Administrative	East Campus	Quarry	Lathrop	West Campus	Foothills	Lagunita	Arboretum	San Juan	Total	Notes
Varsity Tennis Court Facility 09-380 (Demolition)		(18,100)									(18,100)	
Varsity Tennis North Wing 09-380 (Demolition)		(1,523)									(1,523)	
Varsity Tennis - Taube Family Tennis Stadium 09-340 (Demolition)		(24,000)									(24,000)	
Varsity Tennis Court Facility 09-345 (Construction)		7,101									7,101	
Softball Stadium Press Box (Demolition)		(206)									(206)	
Softball Stadium (Construction)		9,474									9,474	
Medical School Office Building (Demolition)	(55,437)										(55,437)	
Stanford Auxiliary Library (SAL) 1 Demolition		(27,980)									(27,980)	
Stanford Auxiliary Library (SAL) 2 Demolition		(35,000)									(35,000)	
1215 Welch New Building (Construction) - in review	184,830										184,830	
1215 Welch New Building (Redistribution) - in review	(55,454)	55,454									0	
Gilbert Building Rooftop Greenhouses - on hold	732										732	
GUP Building Area Distribution (allocation)	**1,389,337**	**375,796**	**(27,167)**	**165,000**	**20,000**	**17,341**	**4,732**	**89,961**	**0**	**0**	**2,035,000**	
Building Permits approved in FY 25 or to be approved in	**74,651**	**(34,780)**	**0**	**0**	**0**	**0**	**0**	**0**	**0**	**0**	**39,871**	
Cumulative Total Building Permits	**1,389,337**	**288,830**	**(30,064)**	**152,120**	**(50)**	**17,341**	**3,135**	**89,961**	**0**	**0**	**1,910,610**	
Future Balance	**0**	**86,966**	**2,897**	**12,880**	**20,050**	**110**	**1,597**	**0**	**0**	**0**	**124,500**	

ZGF
ZIMMER GUNSUL FRASCA ARCHITECTS LLP

DENVER
LOS ANGELES
NEW YORK
PORTLAND
SEATTLE
WASHINGTON, DC
VANCOUVER, BC

1223 SW Washington Street
Suite 200
Portland, OR 97205
503.224.3860
www.zgf.com

ZGF Project Number P26717.wrss

Consultant

Full Design Team Roster on Cover Sheet

Client and Project Information

Stanford MEDICINE

1215 Welch Road

Original Issue
ASA SUBMITTAL 12.06.2024

Revisions
RESUBMITTAL 02.28.2025

Key Plan and Orientation

Sheet Status

Sheet Title
STANFORD GUP TRACKING SHEET

Sheet Number
ASA-G0.03

Current Issue
ASA SUBMITTAL

Current Issue Date
12.06.2024

"GUP Checklist" for Projects Proposed Under Stanford's 2000 General Use Permit

Project Description / Tracking Information

Date of Data Sheet submittal:

Status of Data (check): PRELIMINARY (not yet constructed) ☑ or AS-BUILT ☐

Project Manager Name: Bjendra Sewak Email: bsewak@stanford.edu

Phone: 650-725-9262 Address: 560 Fremont Road

City: Stanford State: CA Zip: 94305

Project name: 1215 Welch Road Research Building

Brief project description (including schedule requirements):

Construction of a new Biomedical Research Building, with 3.5 stories above grade and 1 basement level. Principal functions and spaces in this building will include research laboratories, classroom, offices, and a public cafe. The project also proposes demolition of the existing Hagey building after staff, support materials, and equipment have been relocated to the new building. Project scope includes site grading, installation of utilities, removal of trees and associated site improvements.

County File Number:

Assessor Parcel Number: 142-05-045

Address of Project: 1215 Welch Road

City: Stanford State: CA Zip: 94305

Stanford Quad and Building Number: 07-560

Development District: Campus Center

Watershed: SAN FRANCISQUITO CREEK ☑ or MATADERO CREEK ☐

Land Use Designation: Academic Campus Zoning Designation: A1

Construction Date of existing building (year): NA Source:

County Approval Information:

Type of Approval: ASA Date of Approval:

Type of Project (academic, academic support, residential, other): Academic

Number of net housing units (if applicable):

	ASA Application	*Building Permit*	*Project Completion*
Units constructed (faculty/staff)	N/A		
Beds constructed (student)	N/A		
Existing units / beds demolished	N/A		
Net change in units/beds	N/A		

Amount of building gross square footage (if applicable):

	ASA Application	*Building Permit Total**	*Project Completion*
New construction (gsf) GSF GUP	184,830	TBD	TBD
Demolition of existing structure (gsf) (attach demo permit when received)	(11,740)	TBD	TBD
Net change in gsf GSF GUP	173,090	TBD	TBD

See GUP Tracking Sheet on drawing ASA-G0.03 and the GUP redistribution letter for details

A.2.c Is the project included in the 50,000 gsf of temporary surge trailers?

YES NO If yes, then square footage does not count toward 2000 GUP square footage.

☐ ☑

A.3.a Is the project included in the 40,000 gsf of new child care or community centers?

YES NO If yes, then square footage does not count toward 2000 GUP square footage.

☐ ☑

** Note: If there are multiple building permits or demolition permits, provide building permit numbers and associated square footage here:* 1215 Building Permit #TBD = 184,435 GUP sf Hagey Demo Permit #TBD = 11,740 GUP sf

Number of net new parking spaces (if applicable):

	ASA Application	*Building Permit*	*Project Completion*
New parking spaces	0	0	0
Removal of existing spaces	55		
Net change in parking spaces	-55		

H.1 Is this parking located in the "Campus Residential - Low Density" or "Campus "Residential - Medium Density" areas and is it intended to serve faculty/staff housing?

YES NO

☐ ☑

Net change in impervious surface (sq. ft.) with proposed project:

	ASA Application	*Building Permit*	*Project Completion*
Existing impervious surface on project site (sf)	65,632		
Post-project impervious surface (sf)	97,165		
Net change in impervious surface	31,533		

Note: See drawing ASA-C5.00

Impervious surface calculations performed by: BKF/Steven Reynolds

** Note: must be a California certified architect or civil engineer*

Summary of C.3 regulation approach (couple of sentences):

The total post-project impervious area is greater than the pre-project impervious area (by an increase of 31,533square feet). The project is located in an area on HM applicability (Green area) on the HM applicability map. Therefore, the project must implement hydromodification requirements. The west campus stormwater capture facility (county file No. 10689-18C3) has been designed to provide hydromodification for all projects in the San Francisquito creek. The project uses 31,533 square feet of hydromodification capacity from the west campus stormwater treatment facility. Source controls and site design measures will be implemented to protect nearby water quality. These measures include beneficial landscaping, and storm drain labeling.

Removal / relocation of trees greater than 12" dbh:

	ASA Application		*Building Permit*		*Project Completion*	
Number of trees removed	*Oaks:* 3	*Non-oaks:*	*Oaks:*	*Non-oaks:*	*Oaks:*	*Non-oaks:*
Number of trees relocated	*Oaks:* 0	*Non-oaks:*	*Oaks:*	*Non-oaks:*	*Oaks:*	*Non-oaks:*
Number of replacement trees planted	*Oaks:* 9	*Non-oaks:*	*Oaks:*	*Non-oaks:*	*Oaks:*	*Non-oaks:*

Palo Alto Unified School District Fee (if not required for project, state reason):

Date: before issuance of building permit

Amount: TBD

Affordable Housing in-lieu fee payment (if not required for project, state reason):

Rate: TBD

Total Payment: TBD

Date submitted: before issuance of TCO

Summary of SWPPP compliance (completed at end of project):

Water conservation measures employed (completed at end of project):

List of noise complaints (Completed at end of project):

Results of any required special studies (e.g. special status plants, bird nest surveys. Completed at end of project):

Project Specific Studies and Requirements

F.6.a How will the affordable housing requirement for academic development be met? Check one:

☐ 1 affordable housing unit for each 11,773 square feet of academic development, OR

☑ An appropriate in-lieu cash payment. If the fee is chosen, the County will require the fee through the ASA Conditions of Approval and calculate the amount required at the time of Building Permit. It will be paid by Stanford prior to Certificate of Occupancy, OR

☐ Not Applicable

F.8 Has the following housing linkage requirement for academic projects been met?

Academic Development (gsf)	*# housing units through framing inspection*
500,000	505
1,000,000	1,210
1,500,000	1,815
2,035,000	2,420

YES NO N/A

☑ ☐ ☐

G.11 Is the proposed project one of the following: Escondido Village housing in excess of 100 units, West Campus or Lagunita district faculty/staff housing, Performing Arts Center, expansion/replacement of basketball arena, Stanford Avenue faculty/staff housing, a parking lot or structure with a net increase of 400 or more spaces, or a project of similar size and scale?

YES NO If yes, Stanford must submit a project-specific traffic study.

☐ ☑

I.1 Is the project located on a designated San Juan faculty/staff housing project site?

YES NO If yes, the project must be consistent with Stanford's Program for Replacement of Recreational Facilities Improvements in the San Juan District.

☐ ☑

K.1 Is the proposed project located in riparian, disturbed riparian, oak woodland, annual grassland-oak woodland, or modified oak woodland areas?

YES NO If yes, the County will retain an independent qualified biologist to conduct focused surveys for special-status plants (surveys for early-blooming plants are in March/April and late-blooming plants are in June to October). If such plants are identified, Stanford will comply with the associated conditions of approval.

☐ ☑

K.2 Does the proposed project require pre-construction surveys for breeding raptors and migratory birds?

YES NO Pre-construction surveys of trees within 500 feet of the project site may be required if construction activities begin or become more intensive between February 1 and August 31. Construction is expected to begin: January 2026

☑ ☐

K.3 Is the proposed project located in an oak woodland area?

YES NO If yes, Stanford must create or restore oak woodland habitat in the ratio of at least 1.5 to 1.

☐ ☑

K.4 Does the proposed project result in the removal of trees greater than 12" dbh?

YES NO

☑ ☐

If yes, any "protected" trees must be replaced according to the ratios required by this condition (3 to 1 for oaks and 1 to 1 for non-oaks). Please check the appropriate box regarding replacement ratios:

☑ The removed trees will be replaced according to the ratios in this condition.

☐ The removed trees will not be replaced at the ratios because they meet the exemptions in the tree ordinance (e.g. dead or dying).

☐ The removed trees will not be replaced at the ratios because they are not "protected" (i.e., they were not shown in a prior ASA landscape plan).

K.5 Is the proposed project located within areas defined as jurisdictional wetlands on the "Wetlands/Waters of the U.S. Jurisdictional Delineation map" dated June 24, 2002?

YES NO If yes, Stanford will comply with the associated conditions of approval. (Note: Proposed projects south of JSB could require analysis for potential wetlands).

☐ ☑

L.2 Is the proposed building located along Stanford Avenue?

YES NO If yes, Stanford must submit a landscape plan and provide for a minimum 25-foot setback and maximum 30-foot height.

☐ ☑

L.3 Does the proposed project have exterior light sources?

YES NO If yes, Stanford must submit lighting details with the building permit that will show that state-of-the-art illuminaries will be used where necessary, with high-beam efficiency, sharp cut-off, and glare and spill control. Upward glow will not be allowed in residential or academic uses.
See electrical sheets: ASA-EL0.02, ASA-EL1.02, ASA-EL1.02E

☑ ☐

L.4 Is the proposed project located in the Lathrop district?

YES NO If yes, the project must be restricted to the areas shown in Figure 5 of the Conditions of Approval.

☐ ☑

M.1 Does the proposed building project include hazardous materials that are regulated by the California Accidental Release Prevention (CalARP) Law requirements?

YES NO If yes, the application must include the projected quantities and types by hazard category as specified in the County Fire Code (i.e., flammable liquids, corrosives, etc.) for those materials found on CalARP's list.

☐ ☑

N.1 Is the project located in the Stock Farm Monocline?

YES NO If yes, Stanford must have an Engineering Geologist review project plans and submit comments to the County Geologist, prior to issuance of a building permit.

☐ ☑

N.2 Does the proposed project result in an increase in impervious surface beyond the amount mitigated by detention basins constructed to provide mitigation?

YES NO

☐ ☑

N.4 Is the proposed project located in the Groundwater Recharge Area (the Unconfined Zone on the "Approximate Boundary of Unconfined Zone near Stanford Campus" map provided by SCVWD, July 2001?

YES NO Stanford is in the process of preparing a campus-wide groundwater recharge plan to mitigate lost recharge from all projects in the Unconfined Zone. In the meantime, Stanford has initiated an interim plan for such projects: additional creek-diverted water conveyed to Lagunita for percolation.

☐ ☑

N.8 Are any wells located within the project site?

YES NO If yes, Stanford shall take steps to verify that the well was properly abandoned. If Stanford cannot confirm the well was properly abandoned, Stanford will take steps to locate and abandon the well.

☐ ☑

N.10 Is the proposed project located in the Groundwater Recharge Area and does the proposed project result in a new land use or practice (e.g., storage of chemicals in single wall tanks, application of pesticides that could be transported down to the groundwater supply) that could affect groundwater quality or supply?

YES NO If yes, these new land uses or practices must be evaluated to determine whether they pose a threat to groundwater quality or supply.

☐ ☑

O.1 Does the proposed project result in the demolition of any structure more than 50 years old?

YES NO If yes, Stanford must submit an assessment of the structure regarding its eligibility for listing, if the structure is not already listed in the County Inventory.
See Hagey DPR submitted with the ASA package for details.

☑ ☐

O.2 Does the proposed project result in the remodeling or alteration of the exterior of a structure that is over 50 years old?

☐ Yes, however, no assessment is required because the project involves basic maintenance, repair, or replacement in kind. Stanford has marked project plans.

☐ Yes, however, no assessment is required because the project involves exterior remodeling or alteration that will comply with Secretary of Interior (SOI) standards, if such standards were to apply. Stanford has included a letter in the application documenting compliance with the SOI standards.

☐ Yes, Stanford has included a DPR (Primary Record) form in the application.

☑ No, the existing building is less than 50 years old, or there is no existing building.

O.2 Does the proposed project result in remodeling or alteration of the interior of primary public spaces in the Cantor Arts Center / Stanford Museum, Memorial Church, Art Gallery, Hoover Tower, Cobb Track and Angell Field, Memorial Hall, Dinkelspiel Hall, Frost Amphitheater, or the Burnham Pavilion / Ford Center?

YES NO If yes, County may review interiors for compliance with Secretary of Interior standards.

☐ ☑

O.2 Could the new project result in a potential physical effect by being located within 75 feet of a structure that has been listed on, or was previously found to be eligible for listing, on the California Register or National Register?

YES NO If yes, the application shall include a letter confirming the new building construction is compatible with the historic structure.

☐ ☑

O.3 Is the proposed project located in a mapped historic or prehistoric archaeological site?

YES NO If yes, the County will conduct further site-specific analysis.

☐ ☑

___JJ___ Initials by Laura Jones, Director of Heritage Services and University Archaeologist, confirms that the project is not in a mapped historic or prehistoric archaeological site.

P.6 Does the application include information of existing capacity and expected waste-water generation for the affected portion of the wastewater collection system?

YES NO See application will serve letters.

☑ ☐

Q.3 Does the proposed project contain more than 25,000 square feet of laboratory space and 50 fume hoods?

YES NO If yes, Stanford must provide a risk screening analysis and obtain a permit from BAAQMD.

☐ ☑

I certify that these data are accurate for PRELIMINARY ☑ or AS-BUILT ☐ plans.

Form completed by: Joanne Stainbrook/ZGF Architects

Reviewed by Stanford LUEP Office Staff: Ramya Subramanian

Digitally signed 03/04/25 4:45 pm

ZGF
ZIMMER GUNSUL FRASCA ARCHITECTS LLP

DENVER
LOS ANGELES
NEW YORK
PORTLAND
SEATTLE
WASHINGTON, DC
VANCOUVER, BC

1223 SW Washington Street
Suite 200
Portland, OR 97205
503.224.3860
www.zgf.com

ZGF Project Number P26717.wrss

Consultant

Full Design Team Roster on Cover Sheet

Client and Project Information

Stanford MEDICINE

1215 Welch Road

Original Issue
ASA SUBMITTAL 12.06.2024

Revisions
RESUBMITTAL 02.28.2025

Key Plan and Orientation

Sheet Status

Sheet Title
GUP CHECKLIST

Sheet Number
ASA-G0.03A

Current Issue
ASA SUBMITTAL

Current Issue Date
12.06.2024

Sheet Size: 24 x 36 [0" 1" 2"]

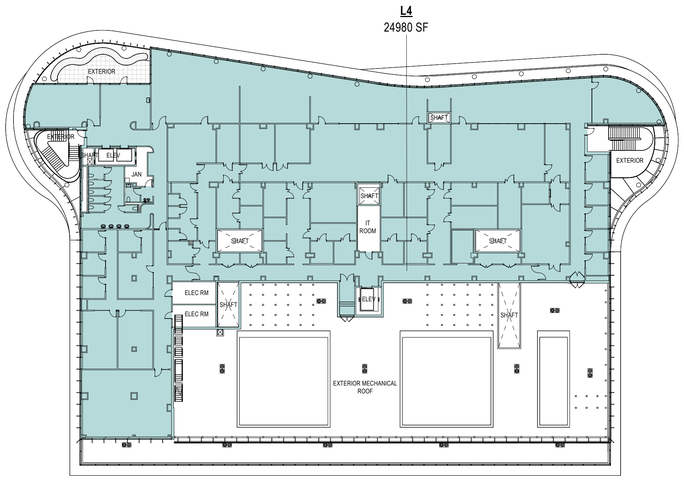

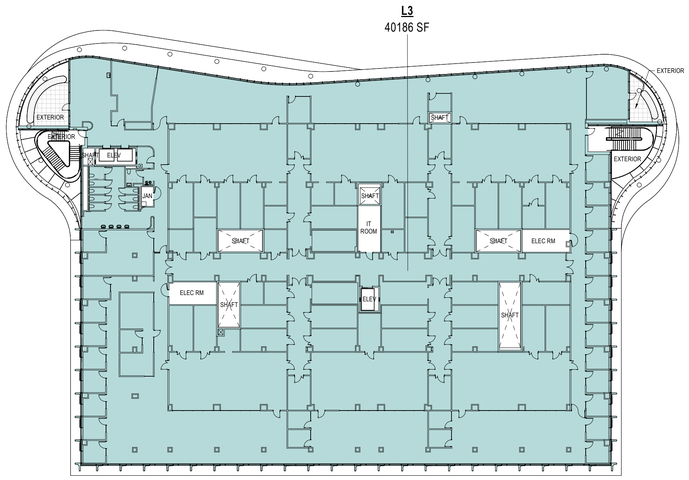

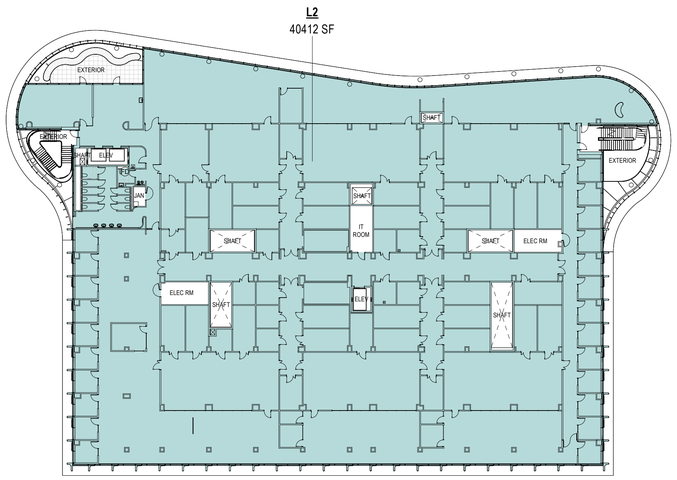

1 ASA-G0.04 LEVEL 4 - GUP
1/32" = 1'-0"

GUP AREA	
LEVEL	AREA
LEVEL 4	24980 SF
LEVEL 3	40186 SF
LEVEL 2	40412 SF
LEVEL 1	33701 SF
LEVEL 0	45552 SF
	184830 SF

SEE GUP ANALYSIS ON SHEET ASA-G0.03 FOR THIS LINE ITEM IN THE GUP TRACKING SHEET

Methodology for calculating building square footage areas per the Stanford 2000 General Use Permit (GUP):

California Government Code Section 65995-65998:

- Calculate outside wall to outside wall dimensions.
- Inclusive of: interior rooms and structural elements, stairwells on each floor, elevator shaft on ground floor only, basements, attic space if counted as a story, and mezzanines.
- Exclusive of: covered balconies and patios, uncovered balconies and patios, open floor spaces to below, covered arcades, light wells, mechanical shafts, tunnels, elevator shafts on all floors except ground floor (ground floor is inclusive), penthouses, and mechanical / utility room (includes AV, steam, equipment, electrical, IT, and janitorial mop sink rooms).

SUPPLEMENTAL GUP MEMO

County of Santa Clara
Department of Planning and Development
County Government Center, East Wing
70 West Hedding Street, 7th Floor
San Jose, California 95110

	Administration	Development Services	Fire Marshal	Planning
Phone:	(408) 299-6740	(408) 299-5700	(408) 299-5760	(408) 299-5770
Fax:	(408) 299-6757	(408) 279-8537	(408) 287-9308	(408) 288-9198

To: Catherine Palter, Assistant Planning Director, Stanford

From: Marina Rush, Planner, County of Santa Clara

Date: February 24, 2010

Subject: Supplement to County Correspondence, March 3, 2009, Staff Interpretation Regarding Definition of Square Feet, 2000 GUP

This memorandum serves as a Supplement to the Staff Interpretation, dated March 3, 2009, regarding calculating square footage in order to identify the specific Government Code section and define the terms contained therein.

Government Code 65995(b)(2):
In the case of any commercial or industrial construction, thirty-one cents (50.31) per square foot of chargeable covered and enclosed space. "Chargeable covered and enclosed space," for this purpose, means the covered and enclosed space determined to be within the perimeter of a commercial or industrial structure, excluding any storage areas incidental to the principal use of the construction, garage, parking structure, unenclosed walkway, or utility or disposal area. The determination of the chargeable covered and enclosed space within the perimeter of a commercial or industrial structure shall be made by the building department of the city or county issuing the building permit, in accordance with the building standards of that city or county.

The Government Code 65995(b)(2)) defines "Chargeable covered and enclosed space, " as the covered and enclosed space determined to be within the perimeter of a commercial or industrial structure. The County of Santa Clara interprets this to mean to the outside wall of the structure. Chargeable and covered enclosed space excludes several types of spaces, and are defined below for purposes of 2000 GUP square footage counting, calculating school fees, and calculating below market rate housing in lieu (BMR) fees.

- "any storage areas incidental to the principal use of construction": This does not describe the types of storage areas located in Stanford buildings so storage areas are not excluded from chargeable space.
- "garage": Garages associated with faculty and staff housing are excluded.
- "parking structure": aboveground and underground parking structures are excluded from chargeable space.
- "unenclosed walkway": arcades, balconies, exterior walkways are excluded. In addition, tunnels are excluded when they serve as an underground walkway (connection) between buildings. They are included in chargeable space when they are for ingress and egress.
- "utility area": mechanical rooms and shafts are excluded from chargeable space.
- Elevator shafts: are excluded from chargeable space on all except one floor, because that room can only exist on one floor at a time.
- "disposal area": interior disposal areas are excluded from chargeable space.

Board of Supervisors: Donald F. Gage, George Shirakawa, Dave Cortese, Ken Yeager, Liz Kniss
County Executive: Jeffrey V. Smith

2 ASA-G0.04 LEVEL 3 - GUP
1/32" = 1'-0"

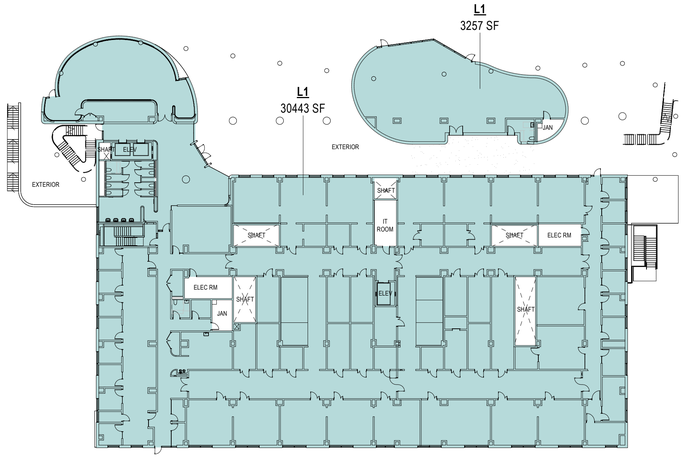

3 ASA-G0.04 LEVEL 2 - GUP
1/32" = 1'-0"

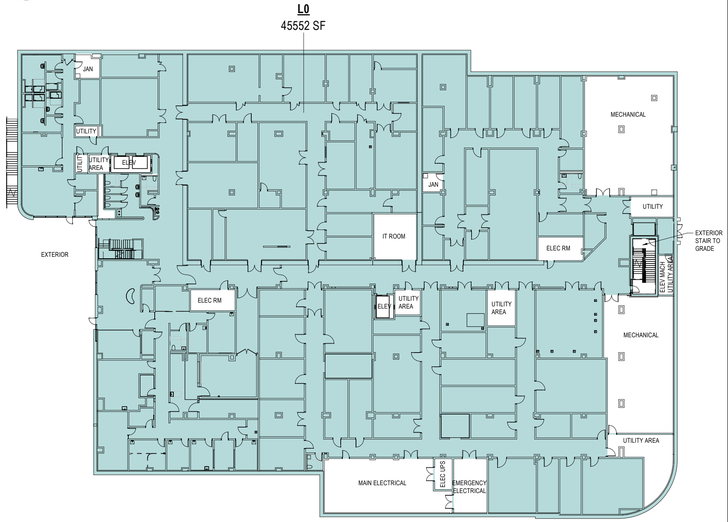

4 ASA-G0.04 LEVEL 1 - GUP
1/32" = 1'-0"

5 ASA-G0.04 LEVEL 0 - GUP
1/32" = 1'-0"

Sheet Size: 24 x 36 | 0" | 1" | 2"

ZGF
ZIMMER GUNSUL FRASCA ARCHITECTS LLP

DENVER
LOS ANGELES
NEW YORK
PORTLAND
SEATTLE
WASHINGTON, DC
VANCOUVER, BC

1223 SW Washington Street
Suite 200
Portland, OR 97205
503.224.3860
www.zgf.com

ZGF Project Number P26717.wrss

Consultant

Full Design Team Roster on Cover Sheet

Client and Project Information

Stanford MEDICINE

1215 Welch Road

Original Issue	
ASA SUBMITTAL	12.06.2024
Revisions	
RESUBMITTAL	02.28.2025

Key Plan and Orientation

Sheet Status

Sheet Title
GUP AREA CALCULATIONS NEW BUILDING

Sheet Number
ASA-G0.04

Current Issue
ASA SUBMITTAL

Current Issue Date
12.06.2024

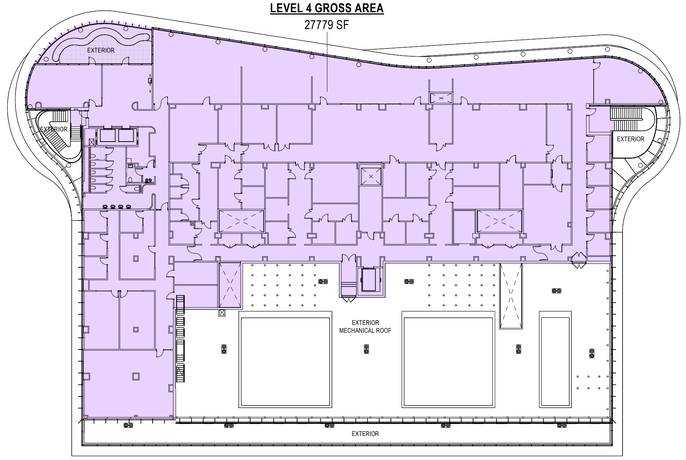

LEVEL 4 GROSS AREA
27779 SF

1 ASA-G0.05 **LEVEL 4 - GROSS AREA**
1/32" = 1'-0"

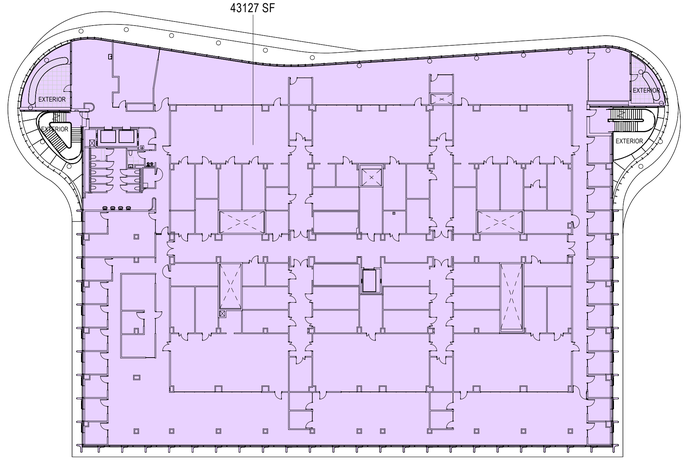

LEVEL 3 GROSS AREA
43127 SF

2 ASA-G0.05 **LEVEL 3 - GROSS AREA**
1/32" = 1'-0"

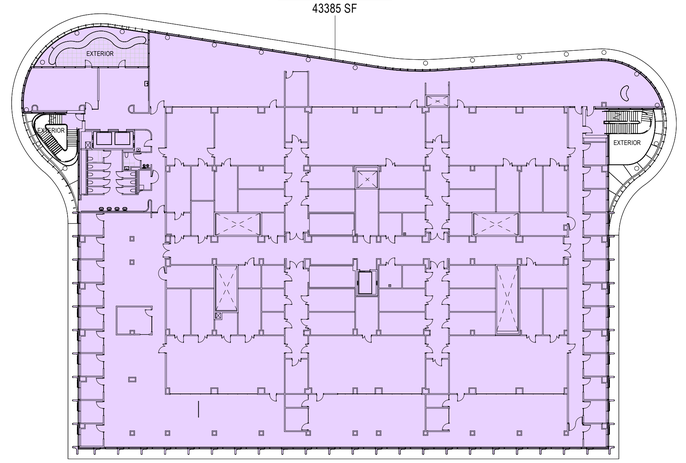

LEVEL 2 GROSS AREA
43385 SF

3 ASA-G0.05 **LEVEL 2 - GROSS AREA**
1/32" = 1'-0"

BUILDING GROSS AREA	
LEVEL	AREA
LEVEL 4	27779 SF
LEVEL 3	43127 SF
LEVEL 2	43385 SF
LEVEL 1	35559 SF
LEVEL 0	53917 SF
	203767 SF

Methodology for calculating building square footage areas per CBC 2022 Section 202 Definitions:

[BG] AREA, BUILDING. The area included within surrounding exterior walls, or exterior walls and fire walls, exclusive of vent shafts and courts. Areas of the building not provided with surrounding walls shall be included in the building area if such areas are included within the horizontal projection of the roof or floor above.

LEVEL 1 GROSS AREA
35559 SF

4 ASA-G0.05 **LEVEL 1 - GROSS AREA**
1/32" = 1'-0"

LEVEL 0 GROSS AREA
53917 SF

5 ASA-G0.05 **LEVEL 0 - GROSS AREA**
1/32" = 1'-0"

Sheet Size: 24 x 36

0" 1" 2"

ZGF
ZIMMER GUNSUL FRASCA ARCHITECTS LLP

DENVER
LOS ANGELES
NEW YORK
PORTLAND
SEATTLE
WASHINGTON, DC
VANCOUVER, BC

1223 SW Washington Street
Suite 200
Portland, OR 97205
503.224.3860
www.zgf.com

ZGF Project Number P26717.wrss

Consultant

Full Design Team Roster on Cover Sheet

Client and Project Information

Stanford MEDICINE

1215 Welch Road

Original Issue
ASA SUBMITTAL 12.06.2024

Revisions
RESUBMITTAL 02.28.2025

Key Plan and Orientation

Sheet Status

Sheet Title
BUILDING GROSS AREAS

Sheet Number
ASA-G0.05

Current Issue
ASA SUBMITTAL

Current Issue Date
12.06.2024

PATH TO PROJECT COMPLETION: PROJECT SEQUENCE

Architectural Site Approval Permit (ASA)		Entitlement Phase	
		Requesting entitlement for both Phase A and Phase B under one ASA approval.	
Permit Packages		**Construction Phases**	
	Demo Permit #1	MSOB Building (Issued on Oct 18, 2024) In process	
At-Risk Review	Permit #1	Early Site Utilities	**PHASE A**
At-Risk Review	Permit #2	Grading, Excavation and Shoring, Existing Loading Dock Wall modifications, Trees (trees removed)	
	Building Permit #3	Building, Foundations, Generator, Landscape (West): **Certificate of Occupancy**	
	Building Permit #4	Late move ins: Lab Fit-Up, Café Fit-Up	
	Permit #5 - CCSR Generator	CCSR Generator Relocation and Upgrade	**PHASE B**
	Demo Permit #2 - Hagey Demo	Hagey Demolition & Landscape (East) (trees planted): **Certificate of Occupancy**	

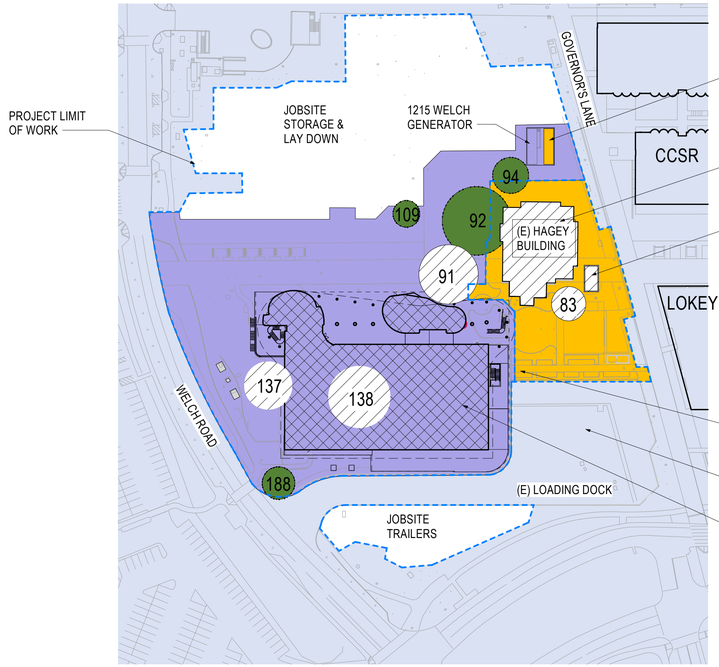

LEGEND

- PROJECT LIMIT OF WORK
- TO BE REMOVED
- PROTECTED TREE INSIDE PROJECT LIMIT OF WORK
- AREA OUTSIDE PROJECT LIMIT OF WORK
- PHASE A EXTENTS
- PHASE B EXTENTS

SITE DIAGRAM WITH PHASES

Sheet Size: 24 x 36 | 0" | 1" | 2"

ZGF
ZIMMER GUNSUL FRASCA ARCHITECTS LLP

DENVER
LOS ANGELES
NEW YORK
PORTLAND
SEATTLE
WASHINGTON, DC
VANCOUVER, BC

1223 SW Washington Street
Suite 200
Portland, OR 97205
503.224.3860
www.zgf.com

ZGF Project Number P26717.wrss

Consultant

Full Design Team Roster on Cover Sheet

Client and Project Information

Stanford MEDICINE

1215 Welch Road

Original Issue
ASA SUBMITTAL 12.06.2024

Revisions
RESUBMITTAL 02.28.2025

Key Plan and Orientation

Sheet Status

Sheet Title
PROJECT SEQUENCE NARRATIVE

Sheet Number
ASA-G0.06

Current Issue
ASA SUBMITTAL

Current Issue Date
12.06.2024

CONSTRUCTION LOGISTICS

1215 WELCH LOGISTICS
2025.02.24
Site Utilities, Excavation, Shoring & Foundation - Phase A

- Blue Phone
- Construction Fencing Boundary
- Emergency Egress
- Emergency Vehicle Acess
- Fire Dept. Connection
- Fire Hydrant
- Gate
- Jobsite Signage
- Knox Box
- Pedestrian Access
- Stanford DPM Signage
- SU Emergency Assembly Point
- Tree Protection Fencing

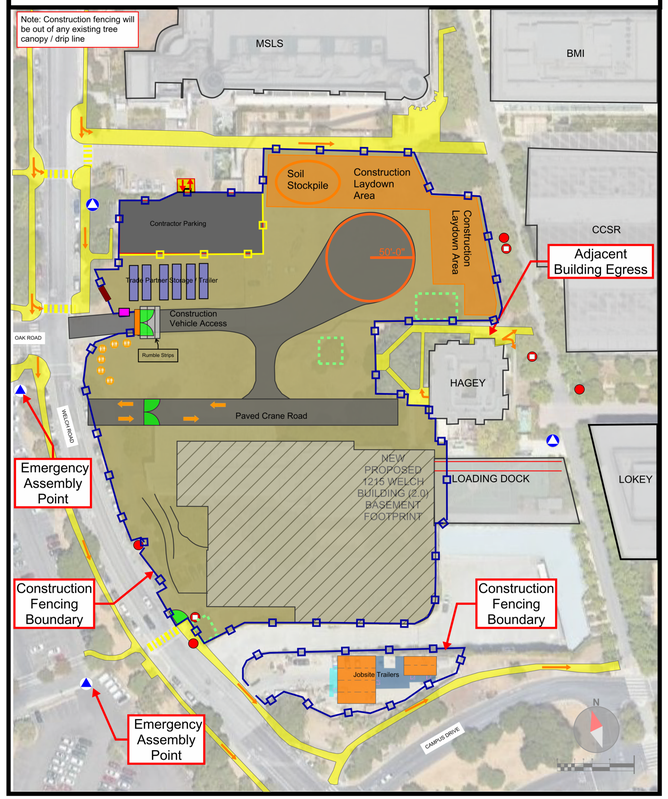

1215 WELCH LOGISTICS
2025.02.24
Building Construction - Phase A

- Blue Phone
- Construction Fencing Boundary
- Emergency Egress
- Emergency Vehicle Acess
- Fire Dept. Connection
- Fire Hydrant
- Gate
- Jobsite Signage
- Knox Box
- Pedestrian Access
- Stanford DPM Signage
- SU Emergency Assembly Point
- Tree Protection Fencing

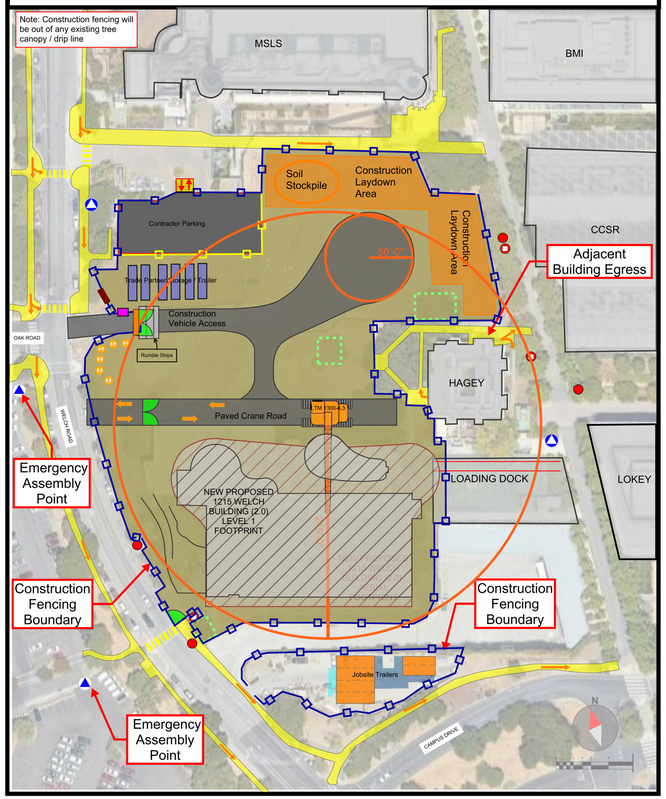

1215 WELCH LOGISTICS
2025.02.24
Hagey Demo Site Restoration - Phase B

- Blue Phone
- Construction Fencing Boundary
- Emergency Egress
- Emergency Vehicle Acess
- Fire Dept. Connection
- Fire Hydrant
- Gate
- Jobsite Signage
- Knox Box
- Pedestrian Access
- Stanford DPM Signage
- SU Emergency Assembly Point
- Tree Protection Fencing

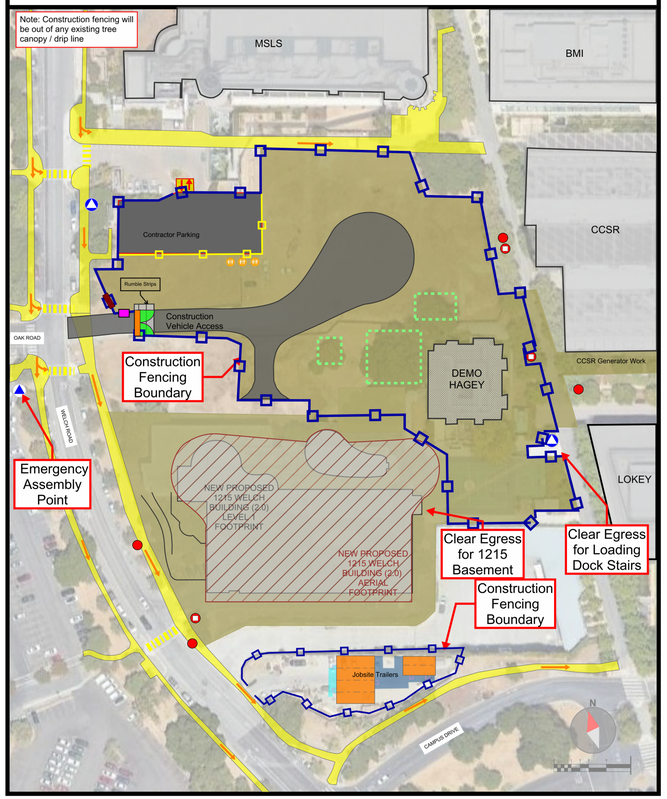

Sheet Size: 24 x 36

0" 1" 2"

ZGF
ZIMMER GUNSUL FRASCA ARCHITECTS LLP

DENVER
LOS ANGELES
NEW YORK
PORTLAND
SEATTLE
WASHINGTON, DC
VANCOUVER, BC

1223 SW Washington Street
Suite 200
Portland, OR 97205
503.224.3860
www.zgf.com

ZGF Project Number P26717.wrss

Consultant

Full Design Team Roster on Cover Sheet

Client and Project Information

Stanford MEDICINE

1215 Welch Road

Original Issue
ASA SUBMITTAL 12.06.2024

Revisions
RESUBMITTAL 02.28.2025

Key Plan and Orientation

Sheet Status

Sheet Title
CONSTRUCTION LOGISTICS PLANS

Sheet Number
ASA-G0.08

Current Issue
ASA SUBMITTAL

Current Issue Date
12.06.2024

1. MSLS - SOUTH ELEVATION ALONG COOPER LANE

CONTEXT NARRATIVE

The Welch Road biomedical research building is located south of the existing Lucas Center/MSLS building and bounded by Welch Road, Governor's Lane, and the School of Medicine loading dock facility. The site planning strategy extends Discovery Walk west past Governor's Lane and engages the north side of the first floor. The covered and recessed main entry reduces the scale and hierarchy of the entry to the laboratory and research portions. The proposed café extends forward of the primary building mass, creating a more immediate relationship to Discovery Walk and the public.

The building form, aesthetic, and materiality align with the Architectural Kit of Parts used throughout the School of Medicine and adjacent West Campus for the past two decades. The massing, height, and flat roof are consistent with the surrounding structures, all 3 to 4 stories with flat yet horizontally expressive roof forms. The building fenestration expresses the highly repetitive interior planning module, primarily research laboratories and associated write-up spaces, consistent with the surrounding context.

The curved corners of the north facade celebrate these spaces as key campus gateway moments, similar to the cylindrical elements of the Lucas Center/MSLS building, which signify entry and campus scale expression.

The building is clad in buff-colored terra cotta panels, closely matching the predominant limestone used on campus. This modern, timeless cladding system relates to the campus context while reducing embodied carbon impact. High performance glazing and vertical terracotta fins face outward toward Campus Drive and Welch Road. The undulating North Façade engages and activates social interaction along Discovery Walk, the primary pedestrian/bicycle path for the School of Medicine. Curvilinear glazing expresses the "gateway" found at other nearby buildings. Horizontal overhangs provide solar shading and relate to the horizontal expression of roof lines on the School of Medicine campus.

Communal amenity spaces (café and large classroom) are located at grade along Discovery Walk and clad in red terra cotta panels, consistent with the Architectural Kit of Parts (e.g., Friederich Center, Huang Center, Biomedical Innovations Building, Center for Academic Medicine). This unified expression and pedestrian experience along Discovery Walk maintains consistency at the campus edge.

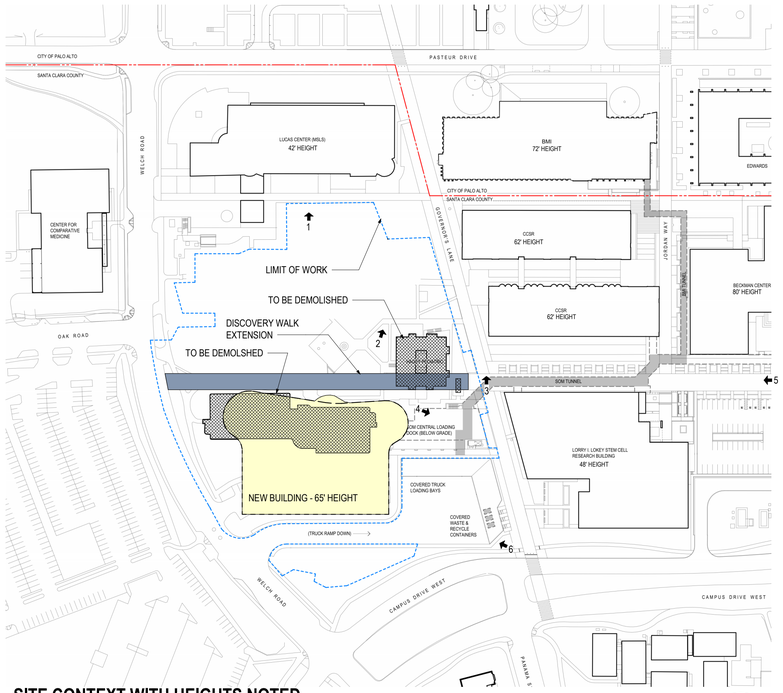

SITE CONTEXT WITH HEIGHTS NOTED

2. MSLS / BMI / CCSR - LOOKING NORTH AT COOPER & GOVERNORS LANE INTERSECTION

3. CCSR - LOOKING NORTH ALONG GOVERNORS LANE

4. LOKEY WEST FACADE - FACING THE EAST PLAZA

5. LOKEY AND BECKMAN - LOOKING NORTH ON DISCOVERY WALK

6. SCHOOL OF MEDICINE BELOW GRADE LOADING DOCK - MSOB / PROJECT SITE BEYOND

ASA BUILDING HEIGHT DIAGRAM

ZGF
ZIMMER GUNSUL FRASCA ARCHITECTS LLP

DENVER
LOS ANGELES
NEW YORK
PORTLAND
SEATTLE
WASHINGTON, DC
VANCOUVER, BC

1223 SW Washington Street
Suite 200
Portland, OR 97205
503.224.3860
www.zgf.com

ZGF Project Number P26717.wrss

Consultant

Full Design Team Roster on Cover Sheet

Client and Project Information

Stanford MEDICINE

1215 Welch Road

Original Issue
ASA SUBMITTAL 12.06.2024

Revisions
RESUBMITTAL 04.22.2025

Key Plan and Orientation

Sheet Status

Sheet Title
EXISTING BUILDINGS CONTEXT

Sheet Number
ASA-G0.09

Current Issue
ASA SUBMITTAL

Current Issue Date
12.06.2024

4/30/2025 5:03:38 PM
2"
1"
0"
Sheet Size: 24 x 36

BASIS OF BEARINGS

THE COORDINATES AND BEARINGS SHOWN ARE BASED ON THE NORTH AMERICAN DATUM OF 1983 (NAD83), EPOCH 1991.35, CALIFORNIA ZONE 3, AS SHOWN ON THE RECORD OF SURVEY OF THE STANFORD MASTER SURVEY CONTROL NETWORK. FILED IN BOOK 747 OF MAPS AT PAGE 40, SANTA CLARA COUNTY RECORDS.

BASIS OF ELEVATIONS

THE ELEVATIONS SHOWN ARE BASED ON THE NATIONAL GEODETIC VERTICAL DATUM OF 1929 (NGVD29), AS SHOWN ON THE RECORD OF SURVEY OF THE STANFORD MASTER SURVEY CONTROL NETWORK. FILED IN BOOK 747 OF MAPS AT PAGE 40, SANTA CLARA COUNTY RECORDS.

BENCHMARKS

S-4 – RESET: FOUND 2"BRASS DISK W/ PUNCH MARK, STAMPED "STANDARD 4, LS 5237", IN MONUMENT WELL AT THE INTERSECTION OF THE NORTH LANE OF CAMPUS DR. WEST AND PANAMA ST. (NO MAP OF RECORD)
NORTHING – 1983810.079
EASTING – 6074375.271
ELEVATION – 98.17

S-111: FOUND 2 1/2" BRASS DISK W/ PUNCH MARK, STAMPED "S-111, LS 5797", IN MONUMENT WELL IN AC PATH WEST OF THE INTERSECTION OF THE NORTH LANE CAMPUS DR. WEST AND WELSH RD.
NORTHING –1983752.666
EASTING – 6074019.724
ELEVATION – 101.22

NOTES

UNITS ARE IN U.S. SURVEY FEET AND DISPLAYED IN FEET AND DECIMALS THEREOF.

LEGEND

LIMIT OF WORK

ZGF
ZIMMER GUNSUL FRASCA ARCHITECTS LLP

DENVER
LOS ANGELES
NEW YORK
PORTLAND
SEATTLE
WASHINGTON, DC
VANCOUVER, BC

1223 SW Washington Street
Suite 200
Portland, OR 97205
503.224.3860
www.zgf.com

ZGF Project Number P26717.wrss

Consultant

BKF
7901 Stoneridge Drive,
SUITE 360
PLEASANTON, CA 94588
(925) 396-7700
www.bkf.com

Full Design Team Roster on Sheet A0.02

Client and Project Information

Stanford MEDICINE

STANFORD UNIVERSITY
SCHOOL OF MEDICINE
1215 Welch Rd
Stanford, CA 94305

Original Issue
ASA SUBMITTAL 12.06.2024

Revisions
RESUBMITTAL 02.28.2025
RESUBMITTAL 04.22.2025

Key Plan and Orientation

Sheet Status
NOT FOR CONSTRUCTION

Sheet Title
EXISTING TOPOGRAPHIC SURVEY

Sheet Number
ASA-C1.00

Current Issue
ASA SUBMITTAL

Current Issue Date
12.06.2024

Sheet Size: 24 x 36 | 0" 1" 2" | 03/13/2024 @ 3:45 PM

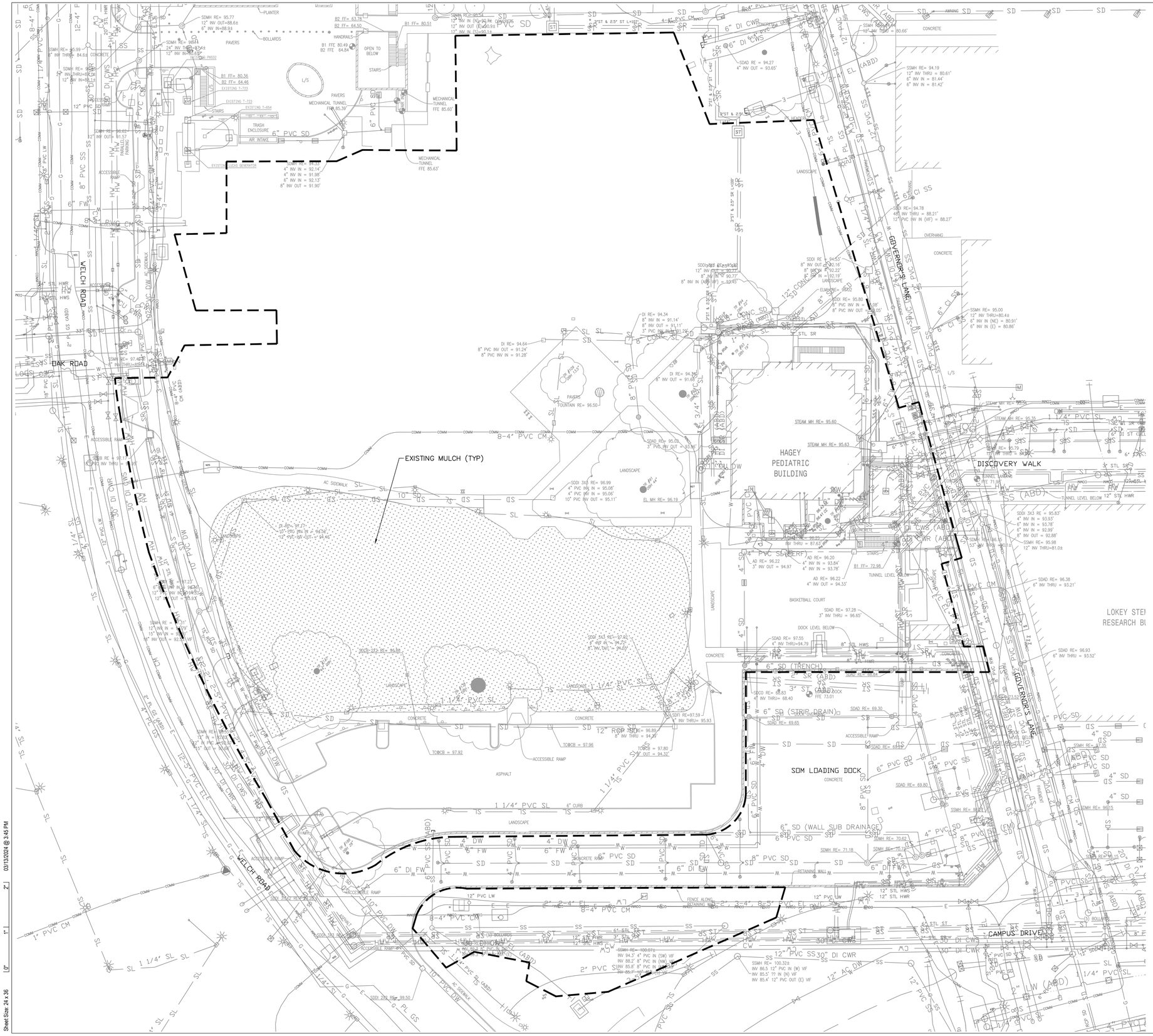

EXISTING UTILITIES LEGEND

SD	STORM DRAIN LINE
SS	SEWER LINE
G	GAS LINE
E	ELECTRICAL LINE
SL	STREET LIGHT LINE
W	WATER LINE
ST	STEAM LINE
SR	STEAM RETURN LINE
HW	HOT WATER SUPPLY LINE
– – –	LIMIT OF WORK

ABBREVIATIONS

BFP	BACKFLOW PREVENTER
COMM	COMMUNICATION LINE
CW	CHILLED WATER LINE
DW	DOMESTIC WATER LINE
ELEC	ELECTRIC LINE
EVCS	ELECTRIC VEHICLE CHARGING STATION
FDC	FIRE DEPARTMENT CONNECTION
FW	FIRE WATER
GM	GAS METER
GV	GAS VALVE
IRR	IRRIGATION
LW	LAKE WATER
PB	PULL BOX
SD	STORM DRAIN LINE
SDDI	STORM DRAIN DRAIN INLET
SDMH	STORM DRAIN MANHOLE
SL	STREET LIGHT LINE
SLP	STREET LIGHT POLE
SLPB	STREET LIGHT PULL BOX
SS	SANITARY SEWER LINE
SSCO	SANITARY SEWER CLEANOUT
SSMH	SANITARY SEWER MANHOLE
STRC	STRUCTURE
WM	WATER METER
WV	WATER VALVE

30 0 30 60
scale 1" = 30' feet

ZGF
ZIMMER GUNSUL FRASCA ARCHITECTS LLP

DENVER
LOS ANGELES
NEW YORK
PORTLAND
SEATTLE
WASHINGTON, DC
VANCOUVER, BC

1223 SW Washington Street
Suite 200
Portland, OR 97205
503.224.3860
www.zgf.com

ZGF Project Number P26717.wrss

Consultant

BKF
7901 Stoneridge Drive,
SUITE 360
PLEASANTON, CA 94588
(925) 396-7700
www.bkf.com

Full Design Team Roster on Sheet A0.02

Client and Project Information

Stanford MEDICINE

STANFORD UNIVERSITY
SCHOOL OF MEDICINE
1215 Welch Rd
Stanford, CA 94305

Original Issue
ASA SUBMITTAL 12.06.2024

Revisions
RESUBMITTAL 02.28.2025
RESUBMITTAL 04.22.2025

Key Plan and Orientation

Sheet Status
NOT FOR CONSTRUCTION

Sheet Title
EXISTING SITE UTILITIES

Sheet Number
ASA-C1.01

Current Issue
ASA SUBMITTAL

Current Issue Date
12.06.2024

Sheet Size: 24 x 36 | 0" | 1" | 2" | 03/3/2024 @ 3:45 PM

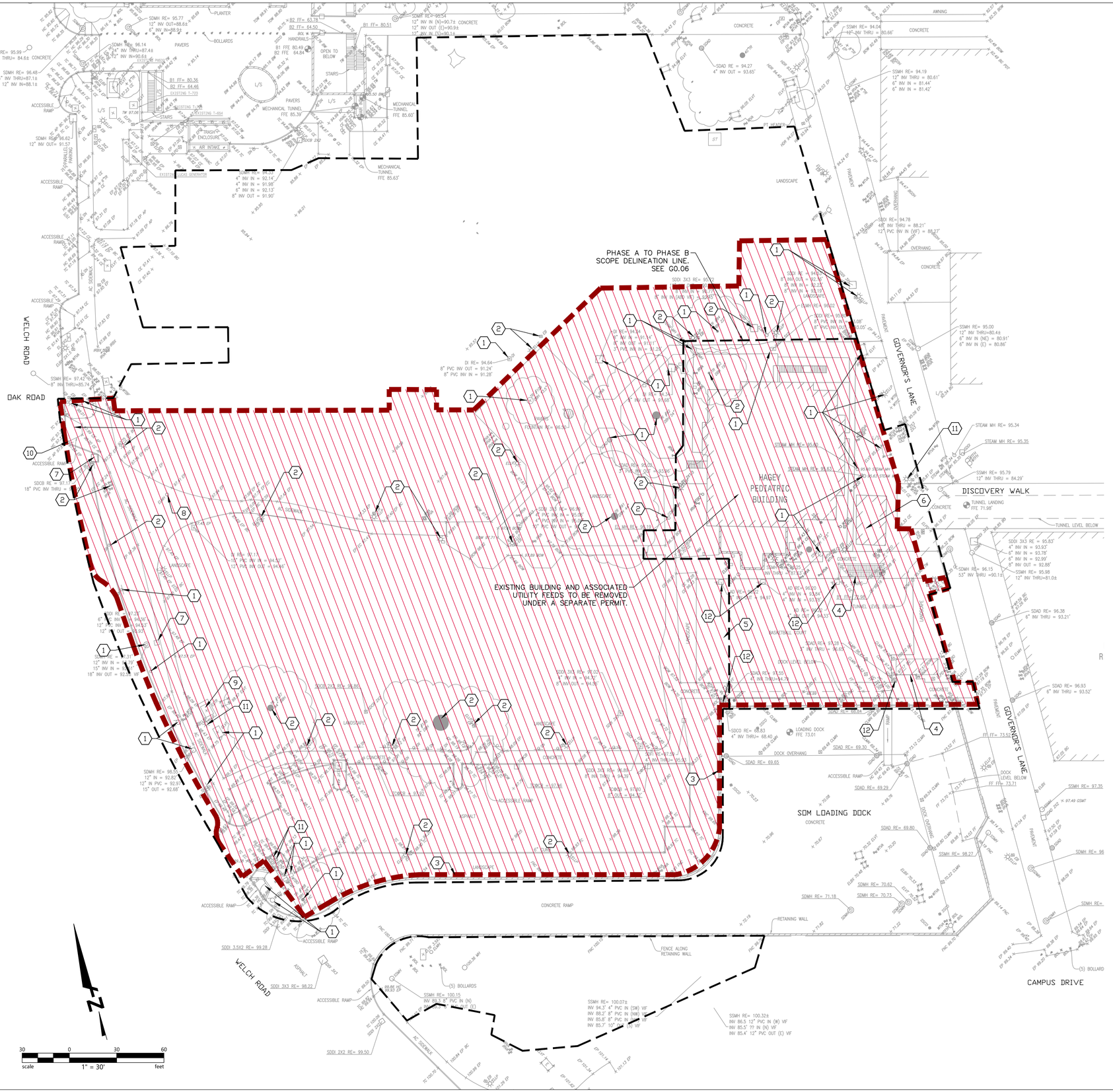

DEMOLITION LEGEND

DEMOLITION AREA

LIMIT OF WORK

GENERAL NOTES

1. PROVIDE TREE PROTECTION FOR ALL TREES TO REMAIN PER STANFORD GUIDELINES. SEE LANDSCAPE DRAWINGS FOR TREE PROTECTION PLAN.
2. WITHIN LIMIT OF DEMOLITION, REMOVE ALL CONCRETE, ASPHALT CONCRETE, AGGREGATE BASE, TOPSOIL, ORGANIC MATERIAL, AND MISCELLANEOUS ITEMS UNLESS OTHERWISE NOTED ON PLANS.
3. PROTECT ALL EXISTING UNDERGROUND UTILITIES UNLESS OTHERWISE NOTED ON PLANS. ADJUST ALL UTILITY STRUCTURES TO PROPOSED GRADE.
4. CONTRACTOR TO SALVAGE SIGNS THAT ARE TO BE REMOVED/RELOCATED FOR REUSE IF IN GOOD CONDITION.
5. PRIOR TO THE START OF CONSTRUCTION, CONTRACTOR TO REVIEW RECORD DOCUMENTS AND VERIFY THAT EXISTING CONDITIONS AT THE PROJECT SITE ARE AS SHOWN ON THE DOCUMENTS FOR THIS PROJECT. NOTIFY OWNER'S REPRESENTATIVE IMMEDIATELY UPON DISCOVERY OF DISCREPANCIES BETWEEN EXISTING CONDITIONS AND INFORMATION SHOWN ON THESE IMPROVEMENT PLANS.
6. ANY EXCAVATION CREATED DURING DEMOLITION SHOULD BE PROPERLY BACKFILLED WITH COMPACTED FILL UNDER THE OBSERVATION OF THE GEOTECHNICAL ENGINEER.
7. DEMOLITION WILL NOT BEGIN UNTIL WDID IS RECEIVED FROM THE STATE WATER BOARDS.

DEMOLITION KEYNOTES

1. EXISTING TO REMAIN. PROTECT IN PLACE.
2. REMOVE/DEMOLISH EXISTING FEATURE.
3. SEE STRUCTURAL DRAWINGS FOR DEMOLITION SCOPE OF WORK AROUND EXISTING LOADING DOCK RETAINING WALL.
4. EXISTING STAIR & ELEVATOR ACCESS TO BELOW GRADE TUNNEL/ LOADING DOCK SHALL REMAIN. PROTECT IN PLACE.
5. SEE ARCHITECTURAL DRAWINGS FOR SCOPE ADJACENT TO EXISTING LOADING DOCK LID.
6. RELOCATE EXISTING CCSR GENERATOR AND ASSOCIATED ELECTRICAL FEED.
7. EXISTING STORM DRAIN STRUCTURE TO REMAIN. ADJUST TO PROPOSED GRADE AS NECESSARY. SEE PROPOSED UTILITY PLAN FOR MORE INFORMATION.
8. RELOCATE EXISTING TELECOM VAULT #25 AND ASSOCIATED CONDUIT FEEDS. SEE PROPOSED UTILITY PLAN FOR MORE INFORMATION.
9. EXISTING PAD MOUNT SWITCH TO BE REPLACED BY STANFORD HIGH VOLT. SHOWN FOR REFERENCE ONLY.
10. REMOVE AND RELOCATE EXISTING STOP SIGN. SEE PROPOSED PAVING AND STRIPING PLAN FOR MORE INFORMATION.
11. RELOCATE EXISTING LIGHT FIXTURE. SEE LIGHTING PLANS FOR MORE INFORMATION.
12. REPLACE GRATE OF EXISTING DRAIN FEEDING DOWN TO THE LOADING DOCK. NEW GRATE SHALL BE HEEL PROOF IN FUTURE PEDESTRIAN AREAS.

EXISTING PARKING LOT NOTES

1. THE SURFACE PARKING SPACES IN THE ASPHALT LOT BEING REMOVED DO NOT ACCOMMODATE COMMUTER PARKING. THE SPACES SERVED SCHOOL OF MEDICINE OPERATIONS AND INCLUDE THE FOLLOWING BREAKDOWN:
   - 1.1. ADA/ DISABILITY: 2 STALLS
   - 1.2. LOADING ZONE 20 MINUTES COMMERCIAL PLATES ONLY: 17 STALLS
   - 1.3. CYCLE PERMITS ONLY (MOTORCYCLE): 1 STALL
   - 1.4. P VISITOR PAY PARKING / PARKMOBILE: 9 STALLS
   - 1.5. PERMIT PARKING SERVICE VEHICLES & UNIVERSITY VEHICLES: 22 STALLS
   - 1.6. TIME LIMIT PARKING 20 MINUTES: 4 STALLS
   - 1.7. TOTAL STALL COUNT: 55

ZGF
ZIMMER GUNSUL FRASCA ARCHITECTS LLP

DENVER
LOS ANGELES
NEW YORK
PORTLAND
SEATTLE
WASHINGTON, DC
VANCOUVER, BC

1223 SW Washington Street
Suite 200
Portland, OR 97205
503.224.3860
www.zgf.com

ZGF Project Number P26717.wrss

Consultant

BKF
7901 Stoneridge Drive, SUITE 360
PLEASANTON, CA 94588
(925) 396-7700
www.bkf.com

Full Design Team Roster on Sheet A0.02

Client and Project Information

Stanford MEDICINE

STANFORD UNIVERSITY SCHOOL OF MEDICINE
1215 Welch Rd
Stanford, CA 94305

Original Issue
ASA SUBMITTAL 12.06.2024

Revisions
RESUBMITTAL 02.28.2025
RESUBMITTAL 04.22.2025

Key Plan and Orientation

Sheet Status
NOT FOR CONSTRUCTION

Sheet Title
SURFACE DEMOLITION PLAN

Sheet Number
ASA-C2.00

Current Issue
ASA SUBMITTAL

Current Issue Date
12.06.2024

Sheet Size: 24 x 36 0" 1" 2" 03/13/2024 @ 3:45 PM

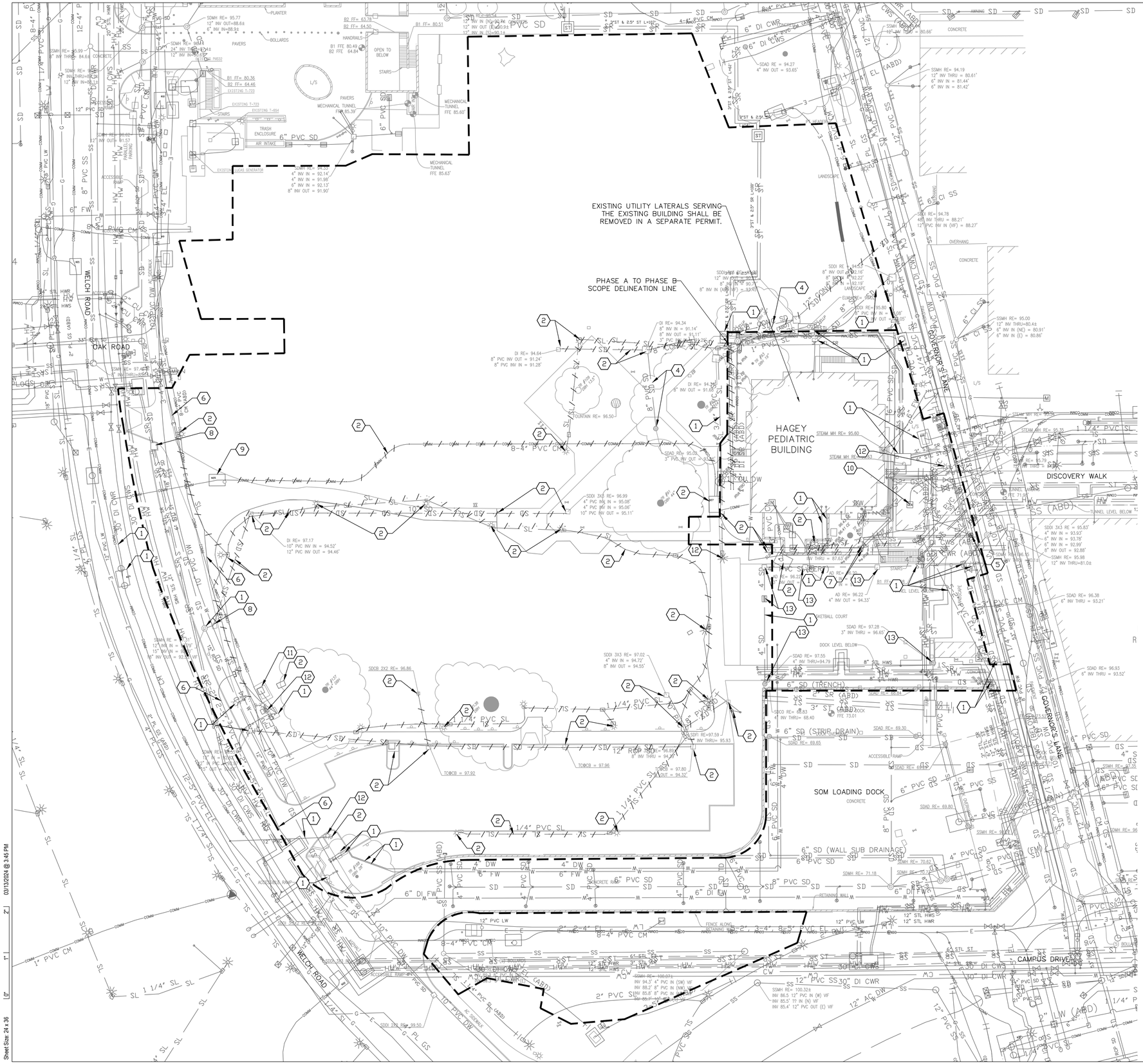

LEGEND

- SD — REMOVE EXISTING UTILITY
- SD — E — CAP AND ABANDON EXISTING UTILITY
- LIMIT OF WORK

GENERAL NOTES

1. PROVIDE TREE PROTECTION FOR ALL TREES TO REMAIN. ALL TREES ARE TO REMAIN UNLESS OTHERWISE NOTED ON PLANS.
2. EXISTING UTILITIES SHOWN ARE BASED ON RECORD INFORMATION. CONTRACTOR SHALL VERIFY ALL EXISTING UTILITIES PRIOR TO STARTING CONSTRUCTION.
3. IRRIGATION PIPING, STRUCTURES AND/OR EQUIPMENT THAT IS DAMAGED DURING CONSTRUCTION SHALL BE REPLACED IN KIND. VERIFY WITH STANFORD WHAT IRRIGATION SYSTEMS ARE TO REMAIN AND WHICH CAN BE REMOVED.
4. ALL UTILITY STRUCTURES THAT ARE NOT IDENTIFIED FOR REMOVAL SHALL REMAIN AND BE PROTECTED. ADJUST TO FUTURE PROPOSED GRADE AS NECESSARY.
5. ALL WATER LATERALS IDENTIFIED FOR REMOVAL SHALL BE REMOVED BACK TO THE MAIN.
6. PLUG EXISTING PIPE PENETRATIONS INTO MANHOLES TO REMAIN IF THE SERVICE ENTERING THE MANHOLE IS IDENTIFIED FOR REMOVAL.
7. ANY EXCAVATION CREATED DURING DEMOLITION SHOULD BE PROPERLY BACKFILLED WITH COMPACTED FILL UNDER THE OBSERVATION OF THE GEOTECHNICAL ENGINEER.
8. DEMOLITION WILL NOT BEGIN UNTIL WDID IS RECEIVED FROM THE STATE WATER BOARDS
9. ALL EXISTING UTILITIES CONFIRMED BY STANFORD TO BE ABANDONED CAN BE REMOVED IF FOUND IN CONFLICT WITH PROPOSED IMPROVEMENTS.

DEMOLITION NOTES

1. EXISTING TO REMAIN AND PROTECT IN PLACE UNTIL HAGEY BUILDING IS DEMOLISHED.
2. REMOVE/DEMOLISH
3. CAP EXISTING SERVICE & ABANDON IN PLACE.
4. ABANDON EXISTING UTILITY IN PLACE WITHIN EXISTING TREE DRIPLINE.
5. NOT USED.
6. EXISTING HIGH VOLT DUCT BANK TO REMAIN. PROTECT IN PLACE.
7. DEMO EXISTING CHILLED WATER SERVICE BACK TO THE EXISTING VALVES. SEQUENCE WORK TO MINIMIZE SHUTDOWN TO EXISTING HAGEY CHILLED WATER FEED. ANY SHUTDOWN SHALL BE COORDINATED WITH STANFORD.
8. ADJUST EXISTING STORM DRAIN STRUCTURE TO GRADE. SEE PROPOSED UTILITY PLAN FOR MORE INFORMATION.
9. RELOCATE EXISTING TELECOM VAULT #25 AND ASSOCIATED CONDUIT FEEDS. SEE PROPOSED UTILITY PLAN FOR MORE INFORMATION.
10. EXISTING CCSR GENERATOR AND ASSOCIATED ELECTRICAL FEED TO BE REMOVED IN FUTURE PHASE.
11. EXISTING PAD MOUNT SWITCH TO BE REPLACED BY STANFORD HIGH VOLT. SHOWN FOR REFERENCE ONLY.
12. RELOCATE EXISTING LIGHT FIXTURE AND SALVAGE FOR OWNER'S USE.
13. REPLACE GRATE OF EXISTING DRAIN FEEDING DOWN TO THE LOADING DOCK. NEW GRATE SHALL BE HEEL PROOF IN FUTURE PEDESTRIAN AREAS.

ZGF
ZIMMER GUNSUL FRASCA ARCHITECTS LLP

DENVER
LOS ANGELES
NEW YORK
PORTLAND
SEATTLE
WASHINGTON, DC
VANCOUVER, BC

1223 SW Washington Street
Suite 200
Portland, OR 97205
503.224.3860
www.zgf.com

ZGF Project Number P26717.wrss

Consultant

BKF
7901 Stoneridge Drive,
SUITE 360
PLEASANTON, CA 94588
(925) 396-7700
www.bkf.com

Full Design Team Roster on Sheet A0.02

Client and Project Information

Stanford MEDICINE

STANFORD UNIVERSITY
SCHOOL OF MEDICINE
1215 Welch Rd
Stanford, CA 94305

Original Issue
ASA SUBMITTAL 12.06.2024

Revisions
RESUBMITTAL 02.28.2025
RESUBMITTAL 04.22.2025

Key Plan and Orientation

Sheet Status
NOT FOR CONSTRUCTION

Sheet Title
UTILITY DEMOLITION PLAN

Sheet Number
ASA-C2.01

Current Issue
ASA SUBMITTAL

Current Issue Date
12.06.2024

Sheet Size 24 x 36 | 0" | 1" | 2" | 03/13/2024 @ 3:45 PM

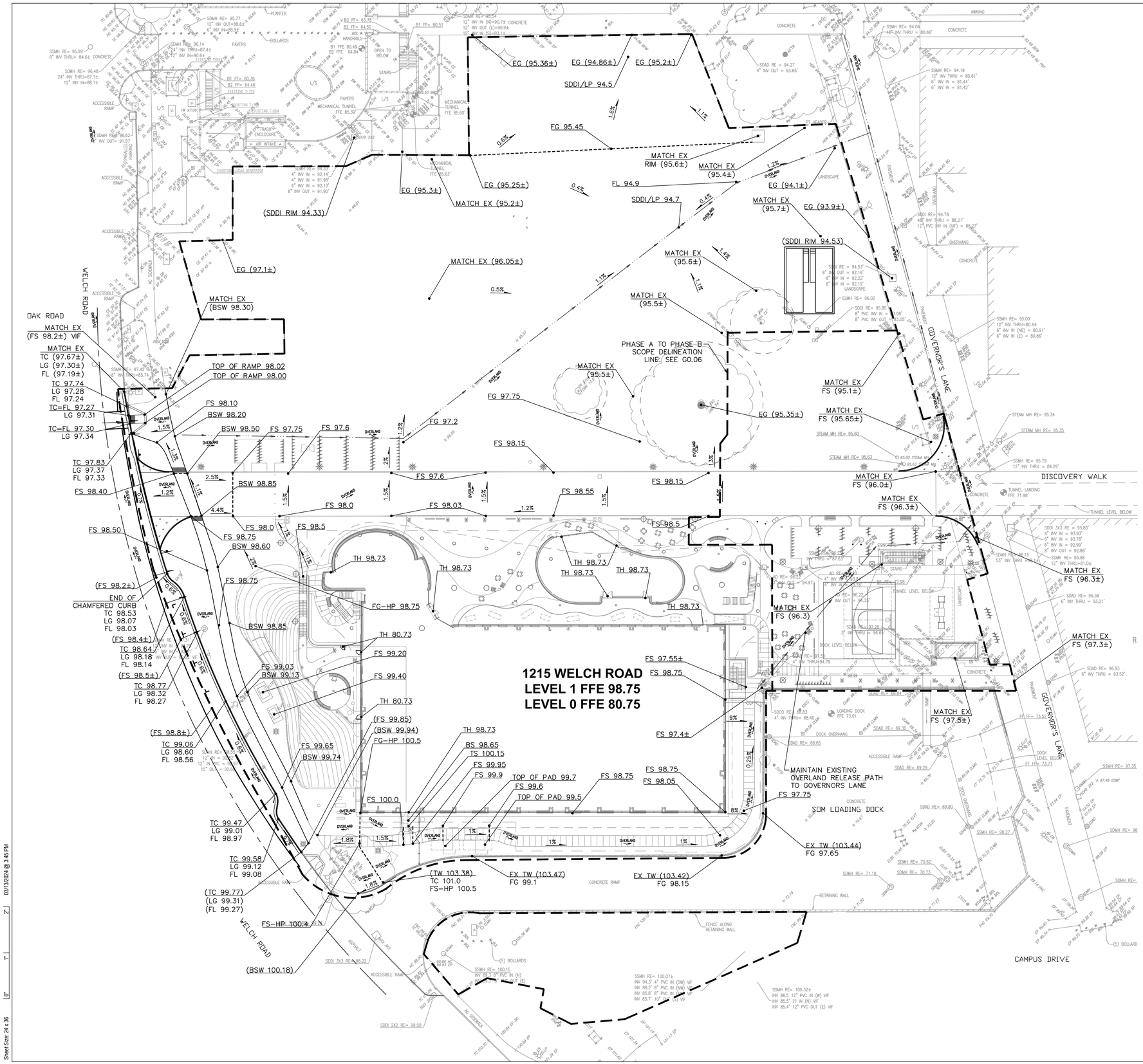
1215 WELCH ROAD
LEVEL 1 FFE 98.75
LEVEL 0 FFE 80.75
WELCH ROAD
OAK ROAD
GOVERNOR'S LANE
DISCOVERY WALK
CAMPUS DRIVE
MAINTAIN EXISTING OVERLAND RELEASE PATH TO GOVERNORS LANE
PHASE A TO PHASE B SCOPE DELINEATION LINE. SEE G0.06
SDM LOADING DOCK
EG (95.36±)
EG (94.86±)
EG (95.2±)
SDDI/LP 94.5
FG 95.45
MATCH EX RIM (95.6±)
MATCH EX (95.4±)
FL 94.9
SDDI/LP 94.7
EG (94.1±)
MATCH EX (95.7±)
EG (93.9±)
(SDDI RIM 94.53)
MATCH EX (95.6±)
MATCH EX (95.5±)
EG (95.3±)
EG (95.25±)
MATCH EX (95.2±)
(SDDI RIM 94.33)
EG (97.1±)
MATCH EX (96.05±)
MATCH EX (BSW 98.30)
MATCH EX (FS 98.2±) VIF
MATCH EX TC (97.67±) LG (97.30±) FL (97.19±)
TC 97.74 LG 97.28 FL 97.24
TC=FL 97.27 LG 97.31
TC=FL 97.30 LG 97.34
TOP OF RAMP 98.02
TOP OF RAMP 98.00
FS 98.10
BSW 98.20
BSW 98.50
FS 97.75
FS 97.6
FG 97.2
TC 97.83 LG 97.37 FL 97.33
FS 98.40
BSW 98.85
FS 98.0
FS 98.03
FS 98.55
FS 98.15
FS 97.6
FS 98.50
FS 98.75
BSW 98.60
FS 98.0
FS 98.5
TH 98.73
FG-HP 98.75
(FS 98.2±)
END OF CHAMFERED CURB TC 98.53 LG 98.07 FL 98.03
(FS 98.4±)
TC 98.64 LG 98.18 FL 98.14
(FS 98.5±)
TC 98.77 LG 98.32 FL 98.27
BSW 98.85
TH 80.73
FS 99.20
FS 99.03
BSW 99.13
FS 99.40
(FS 98.8±)
TC 99.06 LG 98.60 FL 98.56
(FS 99.85)
(BSW 99.94)
FG-HP 100.5
FS 99.65
BSW 99.74
BS 98.65
TS 100.15
FS 99.95
FS 99.9
TOP OF PAD 99.7
FS 99.6
TOP OF PAD 99.5
FS 98.75
FS 98.05
FS 97.55±
FS 97.4±
FS 100.0
TC 99.47 LG 99.01 FL 98.97
TC 99.58 LG 99.12 FL 99.08
(TW 103.38) TC 101.0 FS-HP 100.5
FX TW (103.47) FG 99.1
FX TW (103.42) FG 98.15
FX TW (103.44) FG 97.65
(TC 99.77) (LG 99.31) (FL 99.27)
FS-HP 100.4
(BSW 100.18)
MATCH EX FS (95.1±)
MATCH EX FS (95.65±)
EG (95.35±)
MATCH EX FS (96.0±)
MATCH EX FS (96.3±)
MATCH EX FS (96.3)
MATCH EX FS (97.3±)
MATCH EX FS (97.5±)
FG 97.75
FS 98.15
FS 98.5
FS 98.75
TH 98.73
TH 80.73
FS 98.75
FG-HP 98.75
TH 98.73
TH 98.73
TH 98.73

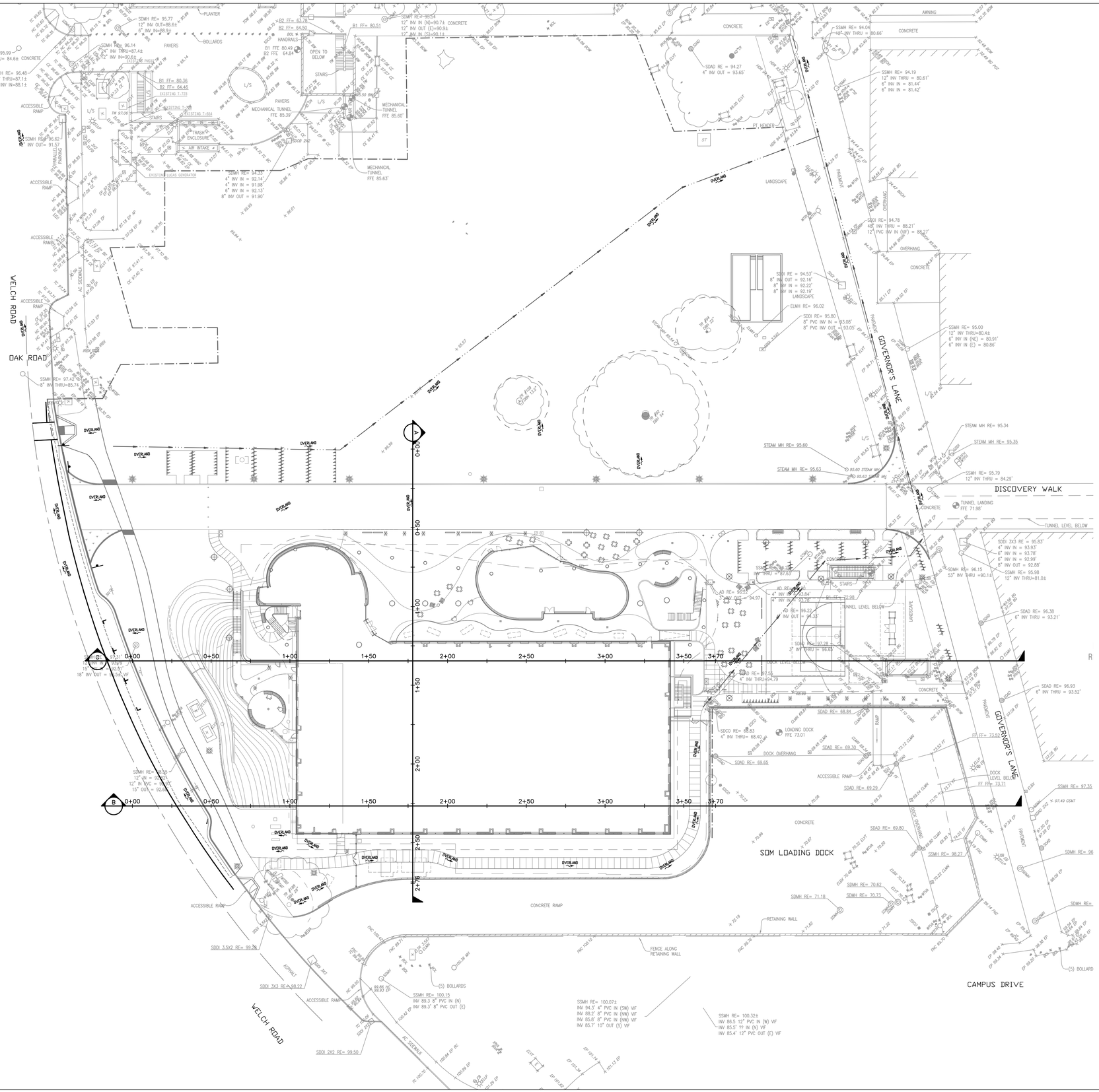

GENERAL NOTES

1. SEE LANDSCAPE PLANS FOR DETAILS REGARDING TREE/LANDSCAPING PLANTING, SITE WALLS AND ALL OTHER SITE FEATURES.
2. ACTUAL QUANTITIES MAY VARY DUE TO FIELD CONDITIONS OR CONSTRUCTION TECHNIQUES. CONTRACTOR SHALL BE RESPONSIBLE FOR VERIFYING ALL QUANTITIES BASED UPON APPROVED PLANS AND PERFORM THEIR OWN INDEPENDENT CALCULATIONS. CONTRACTOR SHALL USE THEIR OWN CALCULATED QUANTITIES FOR BID PURPOSES.
3. THE EARTHWORK QUANTITIES SHOWN ARE IN–PLACE QUANTITIES AND HAVE BEEN ESTIMATED BY THE ENGINEER WITH THE FOLLOWING ASSUMPTIONS:
   - 3.1. EARTHWORK QUANTITIES ARE COMPLETED TO TOP OF GRADE AND DO NOT ACCOUNT FOR THE THICKNESS OF THE FINISHED SURFACE SECTION.
   - 3.2. EARTHWORK QUANTITIES DO NOT ACCOUNT FOR UTILITY TRENCHING AND SPOILS.
   - 3.3. EARTHWORK QUANTITIES DO NOT ACCOUNT FOR EXCAVATION DEPTH FOR LANDSCAPING PLANTING SOILS.
   - 3.4. EARTHWORK QUANTITIES DO NOT ACCOUNT FOR TOPSOIL AND PLANTING MATERIAL.
   - 3.5. EARTHWORK QUANTITIES DO NOT ACCOUNT FOR FILL SHRINKAGE/SWELLING FACTORS.
   - 3.6. EARTHWORK QUANTITIES DO NOT ACCOUNT FOR ANY NECESSARY OVEREXCAVATION.
   - 3.7. EARTHWORK QUANTITIES UTILIZE THE BASEMENT FINISHED FLOOR WHEN CALCULATING CUT BENEATH THE PROPOSED BUILDING. DEPTHS OF STRUCTURAL ELEMENTS, INCLUDING FOOTINGS AND SLABS ARE NOT INCLUDED IN THE QUANTITIES.

EARTHWORK TABLE

	EARTHWORK QUANTITIES (C.Y.)			MAXIMUM DEPTH (FEET)	
LOCATION	CUT	FILL	NET	CUT	FILL
DRIVEWAY, ACCESS ROAD	0	403	403 F	N/A	2.5
BUILDING PAD	34,150	1,135	33,015 C	18.5	4
LANDSCAPING	2,307	1,541	766 C	14	1.5
OTHER IMPROVEMENTS	0	0	0	0	0
TOTAL	36,457	3,079	33,378 C	18.5	4

ZGF
ZIMMER GUNSUL FRASCA ARCHITECTS LLP

DENVER
LOS ANGELES
NEW YORK
PORTLAND
SEATTLE
WASHINGTON, DC
VANCOUVER, BC

1223 SW Washington Street
Suite 200
Portland, OR 97205
503.224.3860
www.zgf.com

ZGF Project Number P26717.wrss

Consultant

BKF
7901 Stoneridge Drive, SUITE 360
PLEASANTON, CA 94588
(925) 396-7700
www.bkf.com

Full Design Team Roster on Sheet A0.02

Client and Project Information

Stanford MEDICINE

STANFORD UNIVERSITY SCHOOL OF MEDICINE
1215 Welch Rd
Stanford, CA 94305

Original Issue
ASA SUBMITTAL 12.06.2024

Revisions
RESUBMITTAL 02.28.2025
RESUBMITTAL 04.22.2025

Key Plan and Orientation

Sheet Status
NOT FOR CONSTRUCTION

Sheet Title
EARTHWORK AND SECTIONS

Sheet Number
ASA-C3.01

Current Issue
ASA SUBMITTAL

Current Issue Date
12.06.2024

30 0 30 60
scale 1" = 30' feet

Sheet Size: 24 x 36 | 0" | 1" | 2" | 03/13/2024 @ 3:45 PM

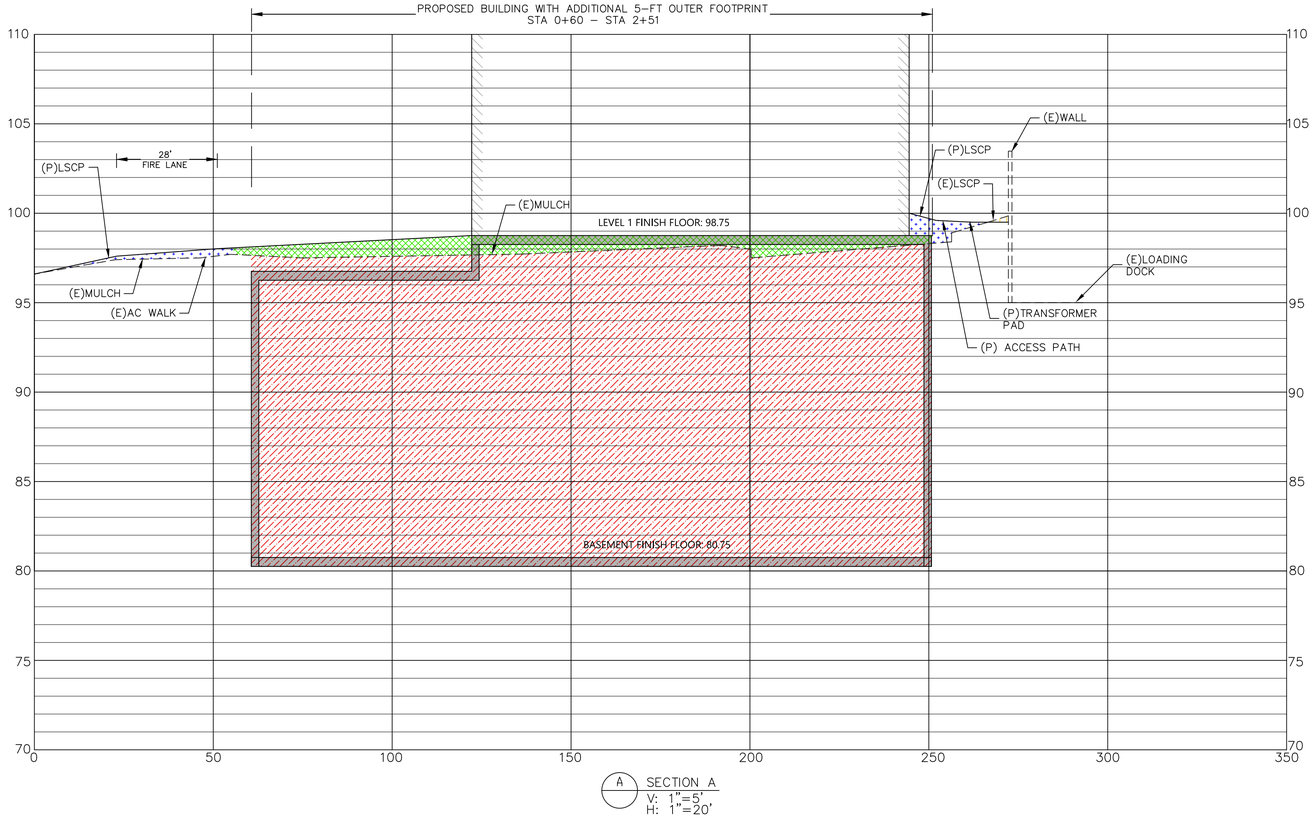

A SECTION A
V: 1"=5'
H: 1"=20'

LEGEND

- PROPOSED BUILDING AREA TO BE CUT SEE NOTE 4
- PROPOSED BUILDING AREA TO BE FILLED SEE NOTE 4
- PROPOSED SITE AREA TO BE CUT
- PROPOSED SITE AREA TO BE FILLED
- EXISTING GRADE
- PROPOSED GRADE

GENERAL NOTES

1. SEE LANDSCAPE PLANS FOR DETAILS REGARDING TREE/LANDSCAPING PLANTING, SITE WALLS, AND ALL OTHER SITE FEATURES.
2. ACTUAL QUANTITIES MAY VARY DUE TO FIELD CONDITIONS OR CONSTRUCTION TECHNIQUES. CONTRACTOR SHALL BE RESPONSIBLE FOR VERIFYING ALL QUANTITIES BASED UPON APPROVED PLANS AND PERFORM THEIR OWN INDEPENDENT CALCULATIONS. CONTRACTOR SHALL USE THEIR OWN CALCULATED QUANTITIES FOR BID PURPOSES.
3. THE EARTHWORK QUANTITIES SHOWN ARE IN-PLACE QUANTITIES AND HAVE BEEN ESTIMATED BY THE ENGINEER WITH THE FOLLOWING ASSUMPTIONS:
   - 3.1. EARTHWORK QUANTITIES ARE COMPLETED TO TOP OF GRADE AND DO NOT ACCOUNT FOR THE THICKNESS OF THE FINISHED SURFACE SECTION.
   - 3.2. EARTHWORK QUANTITIES DO NOT ACCOUNT FOR UTILITY TRENCHING AND SPOILS.
   - 3.3. EARTHWORK QUANTITIES DO NOT ACCOUNT FOR EXCAVATION DEPTH FOR LANDSCAPING PLANTING SOILS.
   - 3.4. EARTHWORK QUANTITIES DO NOT ACCOUNT FOR TOPSOIL AND PLANTING MATERIAL.
   - 3.5. EARTHWORK QUANTITIES DO NOT ACCOUNT FOR FILL SHRINKAGE/SWELLING FACTORS.
   - 3.6. EARTHWORK QUANTITIES DO NOT ACCOUNT FOR ANY NECESSARY OVEREXCAVATION.
   - 3.7. EARTHWORK QUANTITIES UTILIZE THE BASEMENT FINISHED FLOOR WHEN CALCULATING CUT BENEATH THE PROPOSED BUILDING. DEPTHS OF STRUCTURAL ELEMENTS, INCLUDING FOOTINGS AND SLABS ARE NOT INCLUDED IN THE QUANTITIES.

EARTHWORK TABLE

	EARTHWORK QUANTITIES (C.Y.)			MAXIMUM DEPTH (FEET)	
LOCATION	CUT	FILL	NET	CUT	FILL
DRIVEWAY, ACCESS ROAD	0	403	403 F	N/A	2.5
BUILDING PAD	34,150	1,135	33,015 C	18.5	4
LANDSCAPING	2,307	1,541	766 C	14	1.5
OTHER IMPROVEMENTS	0	0	0	0	0
TOTAL	36,457	3,079	33,378 C	18.5	4

ZGF
ZIMMER GUNSUL FRASCA ARCHITECTS LLP

DENVER
LOS ANGELES
NEW YORK
PORTLAND
SEATTLE
WASHINGTON, DC
VANCOUVER, BC

1223 SW Washington Street
Suite 200
Portland, OR 97205
503.224.3860
www.zgf.com

ZGF Project Number P26717.wrss

Consultant

BKF
7901 Stoneridge Drive,
SUITE 360
PLEASANTON, CA 94588
(925) 396-7700
www.bkf.com

Full Design Team Roster on Sheet A0.02

Client and Project Information

Stanford MEDICINE

STANFORD UNIVERSITY
SCHOOL OF MEDICINE
1215 Welch Rd
Stanford, CA 94305

Original Issue
ASA SUBMITTAL 12.06.2024

Revisions
RESUBMITTAL 02.28.2025
RESUBMITTAL 04.22.2025

Key Plan and Orientation

Sheet Status
NOT FOR CONSTRUCTION

Sheet Title
SECTIONS

Sheet Number
ASA-C3.02

Current Issue
ASA SUBMITTAL

Current Issue Date
12.06.2024

Sheet Size: 24 x 36 | 0" | 1" | 2" | 03/13/2024 @ 3:45 PM

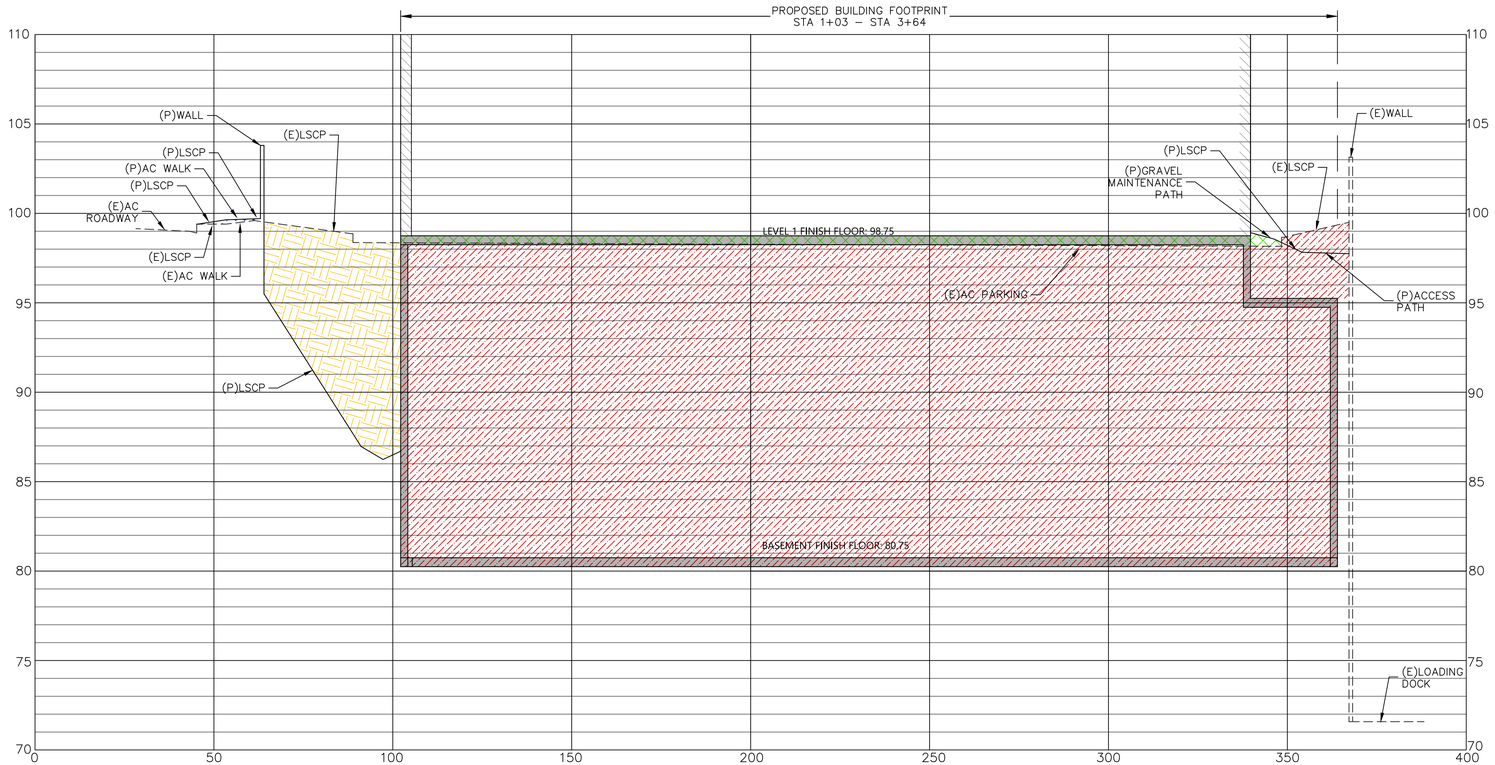

B SECTION B
V: 1"=5'
H: 1"=20'

LEGEND

- PROPOSED BUILDING AREA TO BE CUT SEE NOTE 4
- PROPOSED BUILDING AREA TO BE FILLED SEE NOTE 4
- PROPOSED SITE AREA TO BE CUT
- PROPOSED SITE AREA TO BE FILLED
- EXISTING GRADE
- PROPOSED GRADE

GENERAL NOTES

1. SEE LANDSCAPE PLANS FOR DETAILS REGARDING TREE/LANDSCAPING PLANTING, SITE WALLS, AND ALL OTHER SITE FEATURES.
2. ACTUAL QUANTITIES MAY VARY DUE TO FIELD CONDITIONS OR CONSTRUCTION TECHNIQUES. CONTRACTOR SHALL BE RESPONSIBLE FOR VERIFYING ALL QUANTITIES BASED UPON APPROVED PLANS AND PERFORM THEIR OWN INDEPENDENT CALCULATIONS. CONTRACTOR SHALL USE THEIR OWN CALCULATED QUANTITIES FOR BID PURPOSES.
3. THE EARTHWORK QUANTITIES SHOWN ARE IN–PLACE QUANTITIES AND HAVE BEEN ESTIMATED BY THE ENGINEER WITH THE FOLLOWING ASSUMPTIONS:
   - 3.1. EARTHWORK QUANTITIES ARE COMPLETED TO TOP OF GRADE AND DO NOT ACCOUNT FOR THE THICKNESS OF THE FINISHED SURFACE SECTION.
   - 3.2. EARTHWORK QUANTITIES DO NOT ACCOUNT FOR UTILITY TRENCHING AND SPOILS.
   - 3.3. EARTHWORK QUANTITIES DO NOT ACCOUNT FOR EXCAVATION DEPTH FOR LANDSCAPING PLANTING SOILS.
   - 3.4. EARTHWORK QUANTITIES DO NOT ACCOUNT FOR TOPSOIL AND PLANTING MATERIAL.
   - 3.5. EARTHWORK QUANTITIES DO NOT ACCOUNT FOR FILL SHRINKAGE/SWELLING FACTORS.
   - 3.6. EARTHWORK QUANTITIES DO NOT ACCOUNT FOR ANY NECESSARY OVEREXCAVATION.
   - 3.7. EARTHWORK QUANTITIES UTILIZE THE BASEMENT FINISHED FLOOR WHEN CALCULATING CUT BENEATH THE PROPOSED BUILDING. DEPTHS OF STRUCTURAL ELEMENTS, INCLUDING FOOTINGS AND SLABS ARE NOT INCLUDED IN THE QUANTITIES.

EARTHWORK TABLE

	EARTHWORK QUANTITIES (C.Y.)			MAXIMUM DEPTH (FEET)	
LOCATION	CUT	FILL	NET	CUT	FILL
DRIVEWAY, ACCESS ROAD	0	403	403 F	N/A	2.5
BUILDING PAD	34,150	1,135	33,015 C	18.5	4
LANDSCAPING	2,307	1,541	766 C	14	1.5
OTHER IMPROVEMENTS	0	0	0	0	0
TOTAL	36,457	3,079	33,378 C	18.5	4

ZGF
ZIMMER GUNSUL FRASCA ARCHITECTS LLP

DENVER
LOS ANGELES
NEW YORK
PORTLAND
SEATTLE
WASHINGTON, DC
VANCOUVER, BC

1223 SW Washington Street
Suite 200
Portland, OR 97205
503.224.3860
www.zgf.com

ZGF Project Number P26717.wrss

Consultant

BKF
7901 Stoneridge Drive,
SUITE 360
PLEASANTON, CA 94588
(925) 396-7700
www.bkf.com

Full Design Team Roster on Sheet A0.02

Client and Project Information

Stanford MEDICINE

STANFORD UNIVERSITY
SCHOOL OF MEDICINE
1215 Welch Rd
Stanford, CA 94305

Original Issue
ASA SUBMITTAL 12.06.2024

Revisions
RESUBMITTAL 02.28.2025
RESUBMITTAL 04.22.2025

Key Plan and Orientation

Sheet Status
NOT FOR CONSTRUCTION

Sheet Title
SECTIONS

Sheet Number
ASA-C3.03

Current Issue
ASA SUBMITTAL

Current Issue Date
12.06.2024

Sheet Size: 24 x 36 | 0" | 1" | 2" | 03/13/2024 @ 3:45 PM

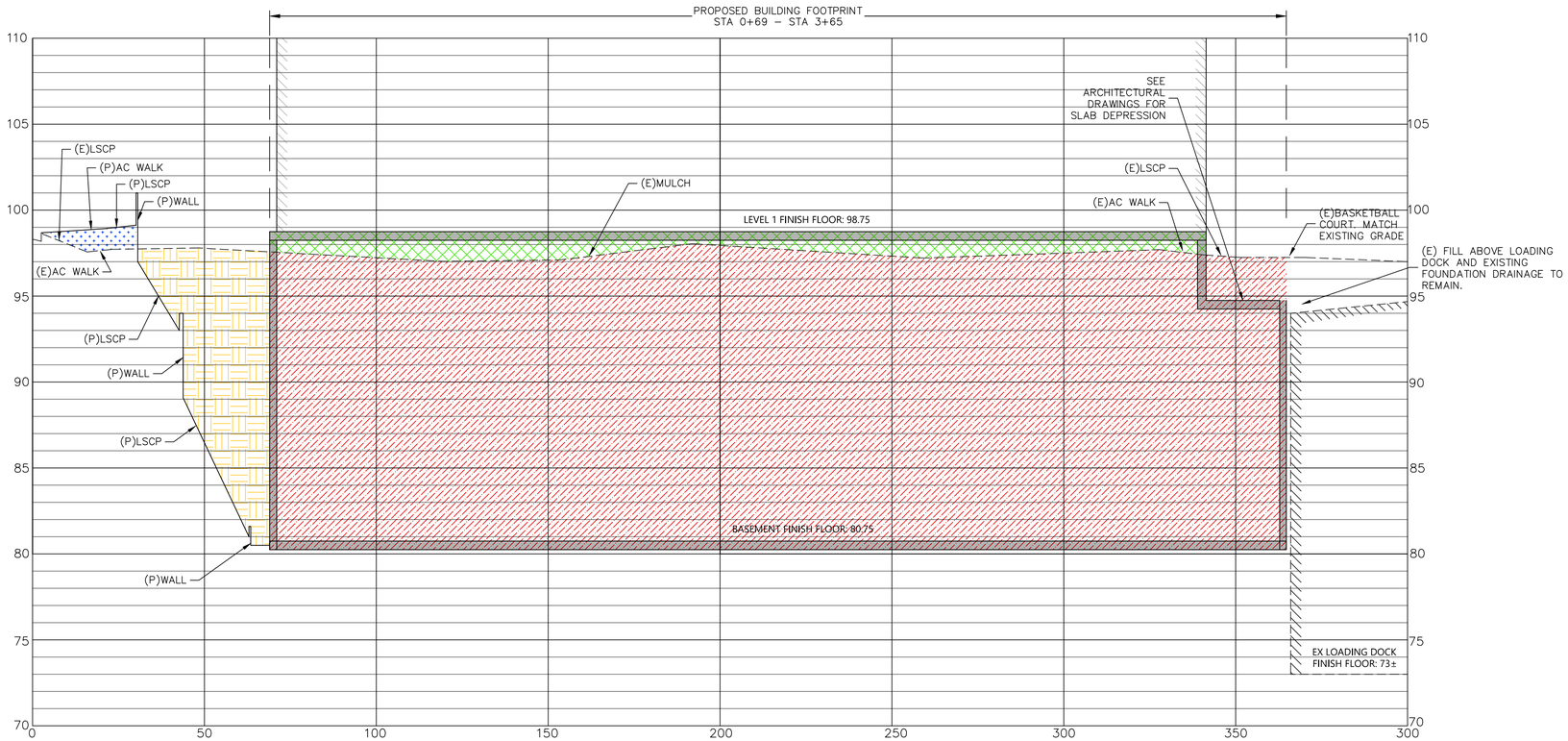

C SECTION C
V: 1"=5'
H: 1"=20'

LEGEND

- PROPOSED BUILDING AREA TO BE CUT SEE NOTE 4
- PROPOSED BUILDING AREA TO BE FILLED SEE NOTE 4
- PROPOSED SITE AREA TO BE CUT
- PROPOSED SITE AREA TO BE FILLED
- EXISTING GRADE
- PROPOSED GRADE

GENERAL NOTES

1. SEE LANDSCAPE PLANS FOR DETAILS REGARDING TREE/LANDSCAPING PLANTING, SITE WALLS, AND ALL OTHER SITE FEATURES.
2. ACTUAL QUANTITIES MAY VARY DUE TO FIELD CONDITIONS OR CONSTRUCTION TECHNIQUES. CONTRACTOR SHALL BE RESPONSIBLE FOR VERIFYING ALL QUANTITIES BASED UPON APPROVED PLANS AND PERFORM THEIR OWN INDEPENDENT CALCULATIONS. CONTRACTOR SHALL USE THEIR OWN CALCULATED QUANTITIES FOR BID PURPOSES.
3. THE EARTHWORK QUANTITIES SHOWN ARE IN–PLACE QUANTITIES AND HAVE BEEN ESTIMATED BY THE ENGINEER WITH THE FOLLOWING ASSUMPTIONS:
   - 3.1. EARTHWORK QUANTITIES ARE COMPLETED TO TOP OF GRADE AND DO NOT ACCOUNT FOR THE THICKNESS OF THE FINISHED SURFACE SECTION.
   - 3.2. EARTHWORK QUANTITIES DO NOT ACCOUNT FOR UTILITY TRENCHING AND SPOILS.
   - 3.3. EARTHWORK QUANTITIES DO NOT ACCOUNT FOR EXCAVATION DEPTH FOR LANDSCAPING PLANTING SOILS.
   - 3.4. EARTHWORK QUANTITIES DO NOT ACCOUNT FOR TOPSOIL AND PLANTING MATERIAL.
   - 3.5. EARTHWORK QUANTITIES DO NOT ACCOUNT FOR FILL SHRINKAGE/SWELLING FACTORS.
   - 3.6. EARTHWORK QUANTITIES DO NOT ACCOUNT FOR ANY NECESSARY OVEREXCAVATION.
   - 3.7. EARTHWORK QUANTITIES UTILIZE THE BASEMENT FINISHED FLOOR WHEN CALCULATING CUT BENEATH THE PROPOSED BUILDING. DEPTHS OF STRUCTURAL ELEMENTS, INCLUDING FOOTINGS AND SLABS ARE NOT INCLUDED IN THE QUANTITIES.

EARTHWORK TABLE

	EARTHWORK QUANTITIES (C.Y.)			MAXIMUM DEPTH (FEET)	
LOCATION	CUT	FILL	NET	CUT	FILL
DRIVEWAY, ACCESS ROAD	0	403	403 F	N/A	2.5
BUILDING PAD	34,150	1,135	33,015 C	18.5	4
LANDSCAPING	2,307	1,541	766 C	14	1.5
OTHER IMPROVEMENTS	0	0	0	0	0
TOTAL	36,457	3,079	33,378 C	18.5	4

ZGF
ZIMMER GUNSUL FRASCA ARCHITECTS LLP

DENVER
LOS ANGELES
NEW YORK
PORTLAND
SEATTLE
WASHINGTON, DC
VANCOUVER, BC

1223 SW Washington Street
Suite 200
Portland, OR 97205
503.224.3860
www.zgf.com

ZGF Project Number P26717.wrss

Consultant

BKF
7901 Stoneridge Drive, SUITE 360
PLEASANTON, CA 94588
(925) 396-7700
www.bkf.com

Full Design Team Roster on Sheet A0.02

Client and Project Information

Stanford MEDICINE

STANFORD UNIVERSITY SCHOOL OF MEDICINE
1215 Welch Rd
Stanford, CA 94305

Original Issue
ASA SUBMITTAL 12.06.2024

Revisions
RESUBMITTAL 02.28.2025
RESUBMITTAL 04.22.2025

Key Plan and Orientation

Sheet Status
NOT FOR CONSTRUCTION

Sheet Title
SECTIONS

Sheet Number
ASA-C3.04

Current Issue
ASA SUBMITTAL

Current Issue Date
12.06.2024

Sheet Size: 24 x 36 | 0" | 1" | 2" | 03/13/2024 @ 3:45 PM

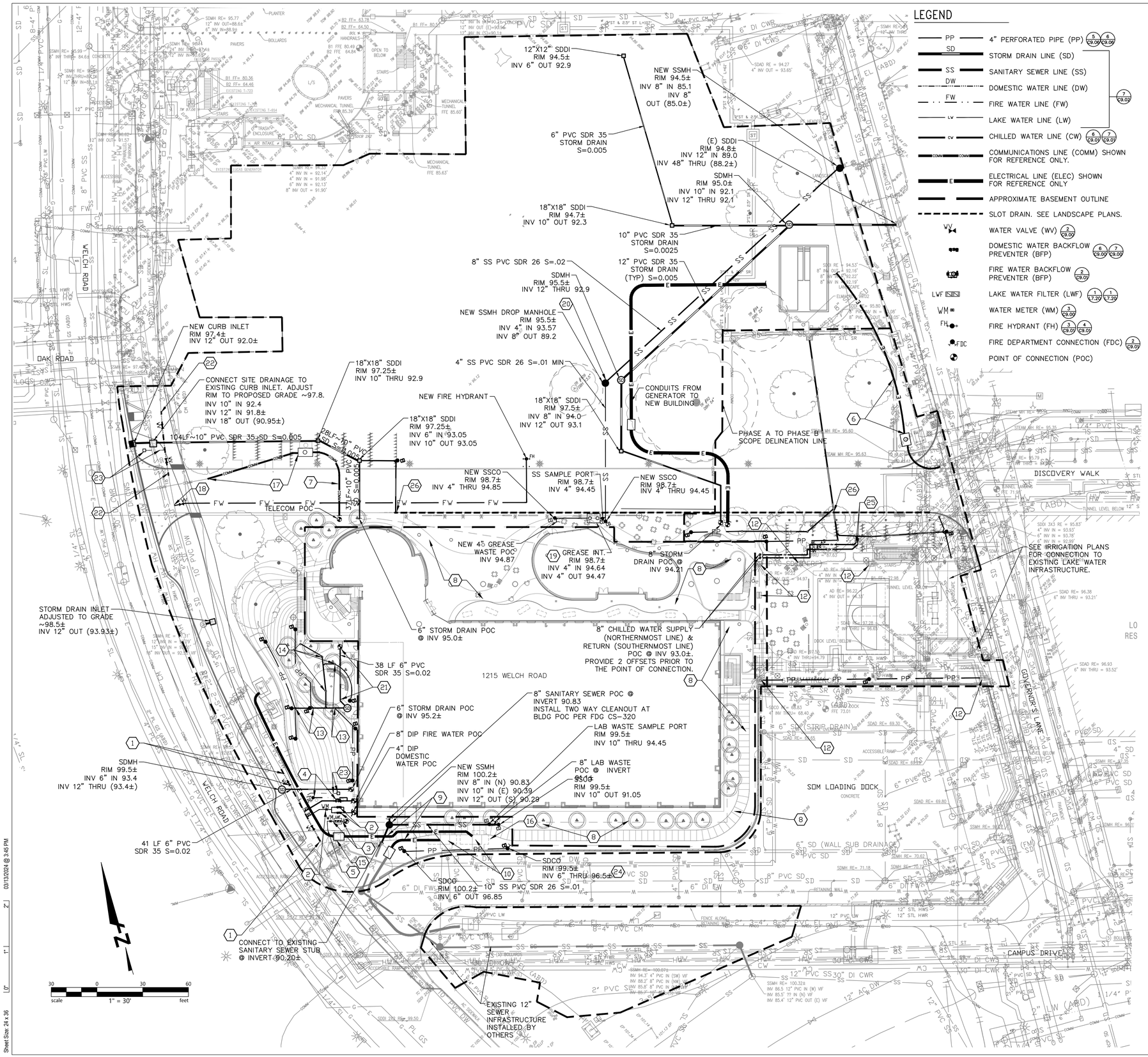

LEGEND

- PP — 4" PERFORATED PIPE (PP) (5/C9.02) (6/C9.02)
- SD — STORM DRAIN LINE (SD)
- SS — SANITARY SEWER LINE (SS)
- DW — DOMESTIC WATER LINE (DW)
- FW — FIRE WATER LINE (FW)
- LW — LAKE WATER LINE (LW)
- CW — CHILLED WATER LINE (CW) (6/C9.01) (7/C9.01)
- COMM — COMMUNICATIONS LINE (COMM) SHOWN FOR REFERENCE ONLY. (7/C9.02)
- E — ELECTRICAL LINE (ELEC) SHOWN FOR REFERENCE ONLY
- APPROXIMATE BASEMENT OUTLINE
- SLOT DRAIN. SEE LANDSCAPE PLANS.
- WV — WATER VALVE (WV) (2/C9.01)
- DOMESTIC WATER BACKFLOW PREVENTER (BFP) (6/C9.00) (7/C9.00)
- FIRE WATER BACKFLOW PREVENTER (BFP) (2/C9.01)
- LWF — LAKE WATER FILTER (LWF) (1/L7.22) (1/L7.23)
- WM — WATER METER (WM) (3/C9.00)
- FH — FIRE HYDRANT (FH) (3/C9.01) (4/C9.01)
- FDC — FIRE DEPARTMENT CONNECTION (FDC) (2/C9.01)
- POC — POINT OF CONNECTION (POC)

LEGEND (CONTINUED)

- SDMH — STORM DRAIN MANHOLE (SDMH) (2/C9.02) (3/C9.02) (8/C9.02)
- SSMH — SANITARY SEWER MANHOLE (SSMH) (2/C9.02) (3/C9.02) (8/C9.02)
- SDDI — STORM DRAIN INLET (SDDI) (5/C9.02) (1/C9.04)
- CURB INLET (2/C9.04) (3/C9.04) (7/C9.04)
- AD — AREA DRAIN (AD) (4/C9.04)
- CO — CLEANOUT (CO)

GENERAL NOTES

1. METAL & THERMOPLASTIC STORM DRAIN MARKINGS LABELED "NO DUMPING – DRAINS TO BAY" ARE REQUIRED TO BE INSTALLED ON ALL NEW STORM DRAIN INLETS PER SPEC SECTION 33 40 00 SUBSECTION 2.10.

UTILITY KEYNOTES

1. REBUILD A PORTION OF THE EXISTING 10" PVC DOMESTIC WATER MAIN. NEW PIPE SHALL BE 10" DUCTILE IRON PIPE. PROVIDE (2) NEW DUCTILE IRON LATERALS PER STANFORD FDG STANDARDS. PROVIDE A VERTICAL OFFSET IN THE NEW WATER MAIN TO PROVIDE 12" VERTICAL CLEARANCE ABOVE THE PROPOSED STORM DRAIN LINE. SEE DETAIL 7 ON C9.06.
2. NEW 4" DUAL DOMESTIC WATER BACKFLOW PREVENTERS AND 2" WATER METER. SEE DETAILS 3, 6, AND 7 ON C9.00.
3. NEW 2" LAKE WATER METER, LAKE WATER FILTER & ENCLOSURE. SEE DETAIL 3 ON C9.00 AND L7.20. CONNECT TO SITE IRRIGATION UPSTREAM OF LAKE WATER FILTER.
4. NEW FIRE DEPARTMENT CONNECTION AND 8" BACKFLOW PREVENTER. SEE DETAIL 2 ON C9.01
5. TAP EXISTING LAKE WATER MAIN LINE AND PROVIDE A NEW LATERAL INTO THE SITE
6. NEW VAULT AND CONDUIT FOR CCSR GENERATOR RELOCATION. SEE ELECTRICAL SITE PLAN FOR MORE INFORMATION.
7. (4)–4" CONDUIT FROM RELOCATED VAULT 25 TO THE BUILDING. VERIFY QUANTITY OF CONDUIT WITH STANFORD IT.
8. LEVEL 1 AREA OVER STRUCTURE SHALL HAVE PLUMBING DRAINS AND WATERPROOFING. CONNECT STORMWATER TO BUILDING PLUMBING. DESIGN BY PLUMBING DESIGN BUILD CONTRACTOR.
9. ELECTRICAL DUCTBANK TO NEW TRANSFORMERS. SEE ELECTRICAL DRAWINGS FOR CONDUIT SIZE AND QUANTITY.
10. (2) NEW PAD MOUNTED TRANSFORMERS. SEE ELECTRICAL DRAWINGS. PROVIDE CLEAR AND LEVEL WORKING SPACE PER PG&E GREENBOOK STANDARDS.
11. POTHOLE AND VERIFY ELEVATION OF EXISTING UTILITY AT NEW PIPE CROSSING.
12. REPLACE GRATE OF EXISTING DRAIN FEEDING DOWN TO THE LOADING DOCK. NEW GRATE SHALL BE HEEL PROOF.
13. CONNECT TO NEW LANDSCAPE SUBDRAINAGE.
14. NEW AREA DRAIN AND 6" PVC SDR 35 STORM DRAIN PIPE (TYP). SLOPE AT 1% MINIMUM TO OUTFALL.
15. NEW 5'X7' HANDHOLE FOR UNDERGROUND ELECTRICAL SERVICE. SEE DETAILS 1–3 ON C9.06 FOR MORE INFORMATION.
16. SEE ELECTRICAL DRAWINGS FOR SECONDARY CONDUIT ROUTING FROM TRANSFORMER TO THE BUILDING.
17. RELOCATE EXISTING VAULT 25. INSTALL A NEW VAULT PER STANFORD FDG CM–12. ASSOCIATED CONDUIT FEEDS FROM VAULT 24 IN WELCH ROAD SHALL BE INTERCEPTED AND EXTENDED TO THE PROPOSED VAULT LOCATION.
18. HOT TAP EXISTING 10" PVC DOMESTIC WATER LINE PER DETAIL 1 ON C9.00. PROVIDE A NEW 6" LATERAL TO THE PROPOSED FIRE HYDRANT.
19. NEW 1,200 GALLON GREASE INTERCEPTOR. SEE DETAIL 4 ON C9.05 FOR MORE INFORMATION.
20. NEW DROP SEWER MANHOLE. SEE DETAIL 2 ON C9.07
21. NEW STORM DRAIN MANHOLE COLLECTING SKY GARDEN DRAINAGE. GRAVITY FLOW TO PLUMBING POINT OF CONNECTION AT INVERT 73.50. SEE PLUMBING PLANS FOR CONTINUATION.
22. REBUILD A PORTION OF THE EXISTING 10" PVC DOMESTIC WATER MAIN. NEW PIPE SHALL BE 10" DUCTILE IRON PIPE. PROVIDE A VERTICAL OFFSET IN THE NEW WATER MAIN TO PROVIDE 12" VERTICAL CLEARANCE ABOVE THE PROPOSED STORM DRAIN LINE. SEE DETAIL 1 ON C9.07.
23. AIR RELIEF VALVE WITH 1" COPPER TUBING. SEE DETAIL 5 ON C9.00
24. CONNECT 6" PERFORATED PIPE TO PLUMBING BUILDING DRAINAGE. SEE PLUMBING PLANS FOR CONTINUATION.
25. CONNECT TO EXISTING 8" CHILLED WATER SERVICE AND RETURN LINES. VERIFY EXACT ELEVATION IN THE FIELD. RESET EXISTING VALVE CANS AT TO BE FLUSH WITH THE FUTURE FINISHED SURFACING. THE NEW CHILLED WATER LINE SHALL SLOPE UP TOWARDS THE NEW BUILDING TO AVOID ANY LOCALIZED HIGHPOINTS OR LOWPOINTS IN THE LINE.
26. CONNECT NEW 6" STORM DRAIN PIPE TO SLOT DRAIN OUTFALL. SEE LANDSCAPE DRAWINGS FOR MORE INFORMATION ON PROPOSED SLOT DRAIN.

ZGF
ZIMMER GUNSUL FRASCA ARCHITECTS LLP

DENVER
LOS ANGELES
NEW YORK
PORTLAND
SEATTLE
WASHINGTON, DC
VANCOUVER, BC

1223 SW Washington Street
Suite 200
Portland, OR 97205
503.224.3860
www.zgf.com

ZGF Project Number P26717.wrss

Consultant

BKF
7901 Stoneridge Drive,
SUITE 360
PLEASANTON, CA 94588
(925) 396-7700
www.bkf.com

Full Design Team Roster on Sheet A0.02

Client and Project Information

Stanford MEDICINE

STANFORD UNIVERSITY
SCHOOL OF MEDICINE
1215 Welch Rd
Stanford, CA 94305

Original Issue
ASA SUBMITTAL 12.06.2024

Revisions
RESUBMITTAL 02.28.2025
RESUBMITTAL 04.22.2025

Key Plan and Orientation

Sheet Status
NOT FOR CONSTRUCTION

Sheet Title
UTILITY PLAN

Sheet Number
ASA-C4.00

Current Issue
ASA SUBMITTAL

Current Issue Date
12.06.2024

Sheet Size: 24 x 36 0" 1" 2" 03/12/2024 @ 3:45 PM

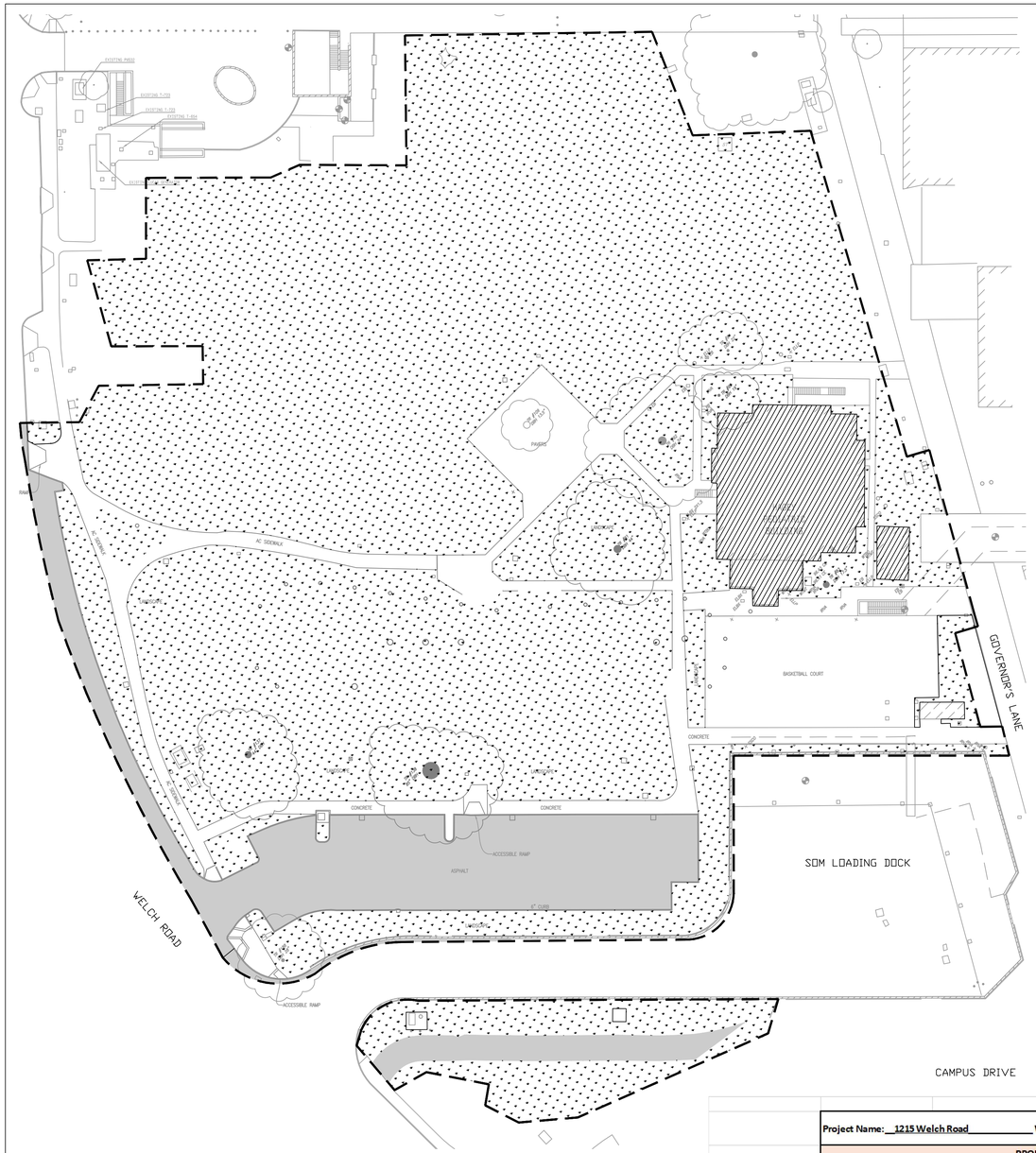
EXISTING P-ADA
EXISTING T-120
EXISTING T-120
EXISTING T-120
EXISTING T-ADA
EXISTING T-120
EXISTING T-120
EXISTING T-120

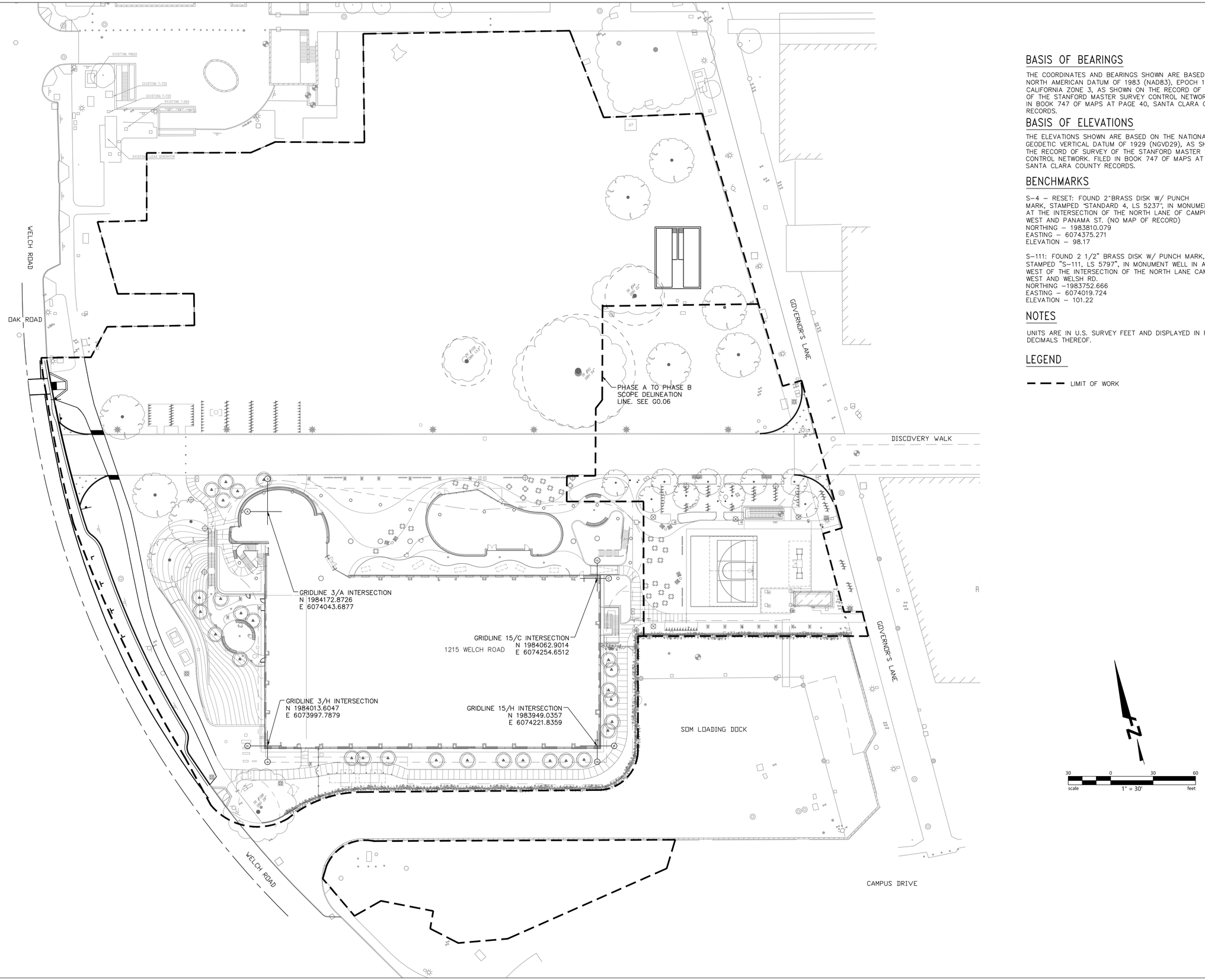

BASIS OF BEARINGS

THE COORDINATES AND BEARINGS SHOWN ARE BASED ON THE NORTH AMERICAN DATUM OF 1983 (NAD83), EPOCH 1991.35, CALIFORNIA ZONE 3, AS SHOWN ON THE RECORD OF SURVEY OF THE STANFORD MASTER SURVEY CONTROL NETWORK. FILED IN BOOK 747 OF MAPS AT PAGE 40, SANTA CLARA COUNTY RECORDS.

BASIS OF ELEVATIONS

THE ELEVATIONS SHOWN ARE BASED ON THE NATIONAL GEODETIC VERTICAL DATUM OF 1929 (NGVD29), AS SHOWN ON THE RECORD OF SURVEY OF THE STANFORD MASTER SURVEY CONTROL NETWORK. FILED IN BOOK 747 OF MAPS AT PAGE 40, SANTA CLARA COUNTY RECORDS.

BENCHMARKS

S-4 – RESET: FOUND 2"BRASS DISK W/ PUNCH MARK, STAMPED "STANDARD 4, LS 5237", IN MONUMENT WELL AT THE INTERSECTION OF THE NORTH LANE OF CAMPUS DR. WEST AND PANAMA ST. (NO MAP OF RECORD)
NORTHING – 1983810.079
EASTING – 6074375.271
ELEVATION – 98.17

S-111: FOUND 2 1/2" BRASS DISK W/ PUNCH MARK, STAMPED "S-111, LS 5797", IN MONUMENT WELL IN AC PATH WEST OF THE INTERSECTION OF THE NORTH LANE CAMPUS DR. WEST AND WELSH RD.
NORTHING –1983752.666
EASTING – 6074019.724
ELEVATION – 101.22

NOTES

UNITS ARE IN U.S. SURVEY FEET AND DISPLAYED IN FEET AND DECIMALS THEREOF.

LEGEND

LIMIT OF WORK

ZGF
ZIMMER GUNSUL FRASCA ARCHITECTS LLP

DENVER
LOS ANGELES
NEW YORK
PORTLAND
SEATTLE
WASHINGTON, DC
VANCOUVER, BC

1223 SW Washington Street
Suite 200
Portland, OR 97205
503.224.3860
www.zgf.com

ZGF Project Number P26717.wrss

Consultant

BKF
7901 Stoneridge Drive,
SUITE 360
PLEASANTON, CA 94588
(925) 396-7700
www.bkf.com

Full Design Team Roster on Sheet A0.02

Client and Project Information

Stanford MEDICINE

STANFORD UNIVERSITY
SCHOOL OF MEDICINE
1215 Welch Rd
Stanford, CA 94305

Original Issue
ASA SUBMITTAL 12.06.2024

Revisions
RESUBMITTAL 02.28.2025
RESUBMITTAL 04.22.2025

Key Plan and Orientation

Sheet Status
NOT FOR CONSTRUCTION

Sheet Title
HORIZONTAL CONTROL PLAN

Sheet Number
ASA-C6.00

Current Issue
ASA SUBMITTAL

Current Issue Date
12.06.2024

Sheet Size 24 x 36 | 0" | 1" | 2" | 03/13/2024 @ 3:45 PM

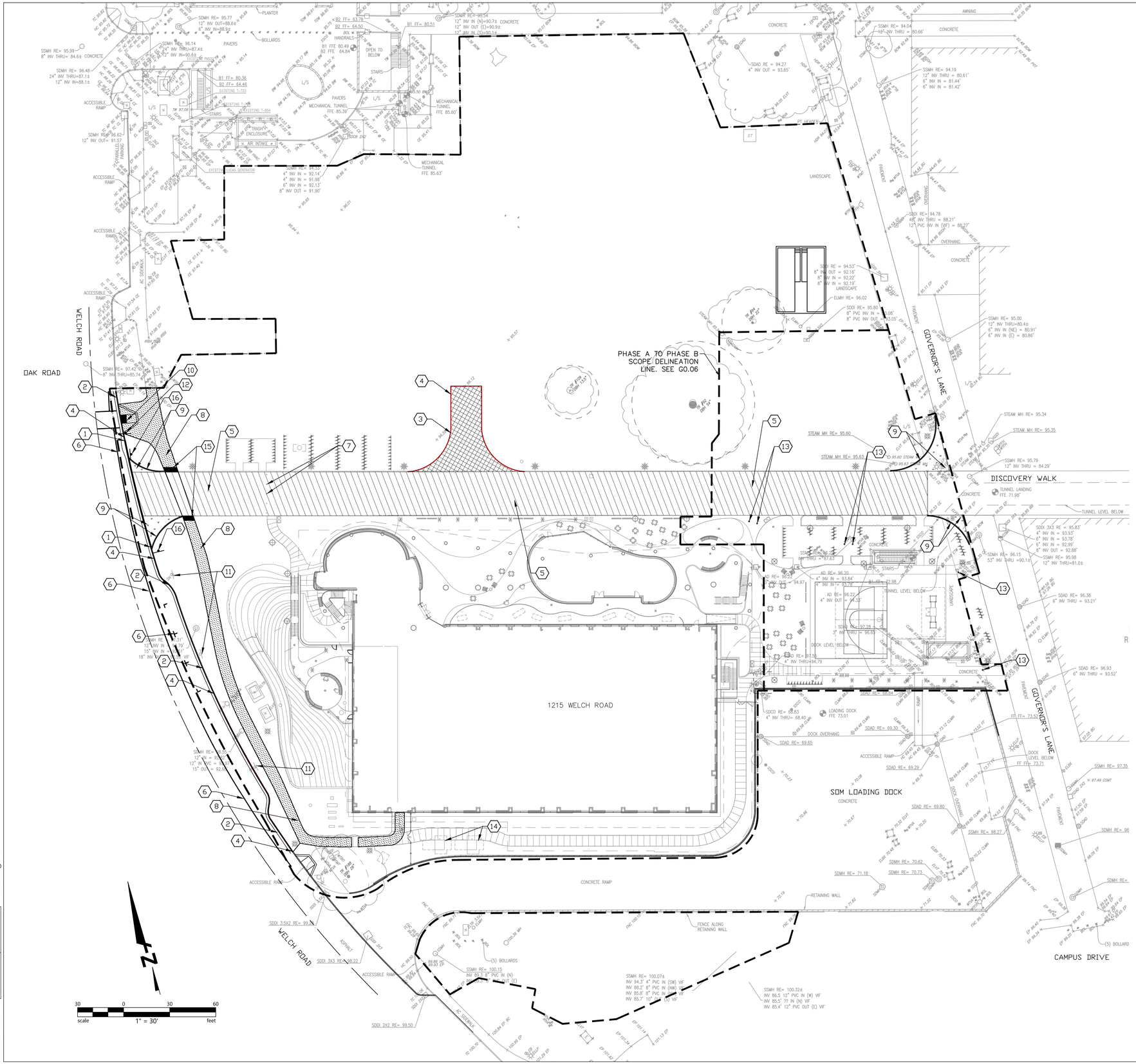

LEGEND

- CONCRETE UNIT PAVER FIRE LANE. UNIT PAVER SHALL BE AN ALL WEATHER MATERIAL COMPLIANT WITH 75,000 LB LOAD CAPACITY. (5/C9.07)
- STONE FILLED "GRASSCRETE" WITH 6" FLUSH CURB EDGE RESTRAINT (5/C9.07) (4/C9.07)
- NEW ASPHALT WALK (1/C9.07)
- TEMPORARY ASPHALT PAVING FOR FIRE TRUCK TURNAROUND (3/C9.07)
- RED CURB PAINT. "NO PARKING. FIRE LANE" (1/C9.05)

KEYNOTES

1. CHAMFERED CURB (2/C9.05)
2. 6" CURB AND GUTTER (1/C9.07)
3. TEMPORARY ASPHALT PAVING FOR FIRE TRUCK TURNAROUND. SEE C10.1 FOR DIMENSIONS. (3/C9.07)
4. RED CURB PAINT. "NO PARKING – FIRE LANE" (1/C9.05)
5. CONCRETE UNIT PAVER FIRE LANE. UNIT PAVER SHALL BE AN ALL WEATHER MATERIAL COMPLIANT WITH 75,000 LB LOAD CAPACITY. SEE LANDSCAPE PLANS FOR METAL EDGE RESTRAINT, PAVER, AND MORTAR BED DETAILING. SEE DETAIL 5 ON C9.07 FOR CONCRETE SUB-SLAB DETAILING.
6. 4" WIDE WHITE STRIPE FOR PARKING STALLS AND BIKE LANE
7. BOLLARDS AT ENTRANCE TO FIRE LANE (4/C9.07) (5/C9.07) (6/C9.07)
8. NEW ASPHALT WALKWAY (1/C9.07)
9. STONE FILLED "GRASSCRETE" WITH6" FLUSH CURB EDGE RESTRAINT (5/C9.05) (4/C9.07)
10. NEW CURB RAMP PER STANFORD FDG CS-292-02 (4/C9.04) (5/C9.04)
11. EXISTING SIGN TO REMAIN. PROTECT IN PLACE.
12. RELOCATE EXISTING STOP SIGN WITH THE CURBLINE REALIGNMENT.
13. NEW METAL FIXED BOLLARD. (5/C9.05)
14. (2) NEW PAD MOUNTED TRANSFORMERS. SEE ELECTRICAL DRAWINGS. CLEAR AND LEVEL WORKING SPACE SHALL BE STABLE, FINISHED LANDSCAPING.
15. NEW TRUNCATED DOMES. (5/C9.04)
16. NEW SIGN READING "FIRE LANE – DO NOT ENTER"

GENERAL NOTES

1. SEE LANDSCAPE PLANS FOR FINISHED MATERIALS IN AREAS NOT IDENTIFIED ON THESE PLANS. SEE LANDSCAPE PLANS FOR FINISH COLOR AND JOINT LAYOUTS.
2. CONTRACTOR SHALL POWER WASH EXISTING PAVING TO REMAIN.
3. ANY EXISTING STRIPING REMOVED OR DAMAGED DUE TO CONSTRUCTION SHALL BE REPLACED IN KIND.
4. ALL SIGNS AND SIGN CODE REFERENCES SHALL BE IN ACCORDANCE WITH THE CALIFORNIA MANUAL OF UNIFORM TRAFFIC CONTROL DEVICES (MUTCD) EDITION 2014
5. ALL PAVEMENT MARKINGS SHALL BE IN ACCORDANCE WITH CALTRANS STANDARD PLANS, 2018 EDITION

ZGF
ZIMMER GUNSUL FRASCA ARCHITECTS LLP

DENVER
LOS ANGELES
NEW YORK
PORTLAND
SEATTLE
WASHINGTON, DC
VANCOUVER, BC

1223 SW Washington Street
Suite 200
Portland, OR 97205
503.224.3860
www.zgf.com

ZGF Project Number P26717.wrss

Consultant

BKF
7901 Stoneridge Drive,
SUITE 360
PLEASANTON, CA 94588
(925) 396-7700
www.bkf.com

Full Design Team Roster on Sheet A0.02

Client and Project Information

Stanford MEDICINE

STANFORD UNIVERSITY
SCHOOL OF MEDICINE
1215 Welch Rd
Stanford, CA 94305

Original Issue
ASA SUBMITTAL 12.06.2024

Revisions
RESUBMITTAL 02.28.2025
RESUBMITTAL 04.22.2025

Key Plan and Orientation

Sheet Status
NOT FOR CONSTRUCTION

Sheet Title
PAVING AND STRIPING PLAN

Sheet Number
ASA-C7.00

Current Issue
ASA SUBMITTAL

Current Issue Date
12.06.2024

Sheet Size: 24 x 36 | 0" | 1" | 2" | 03/13/2024 @ 3:45 PM

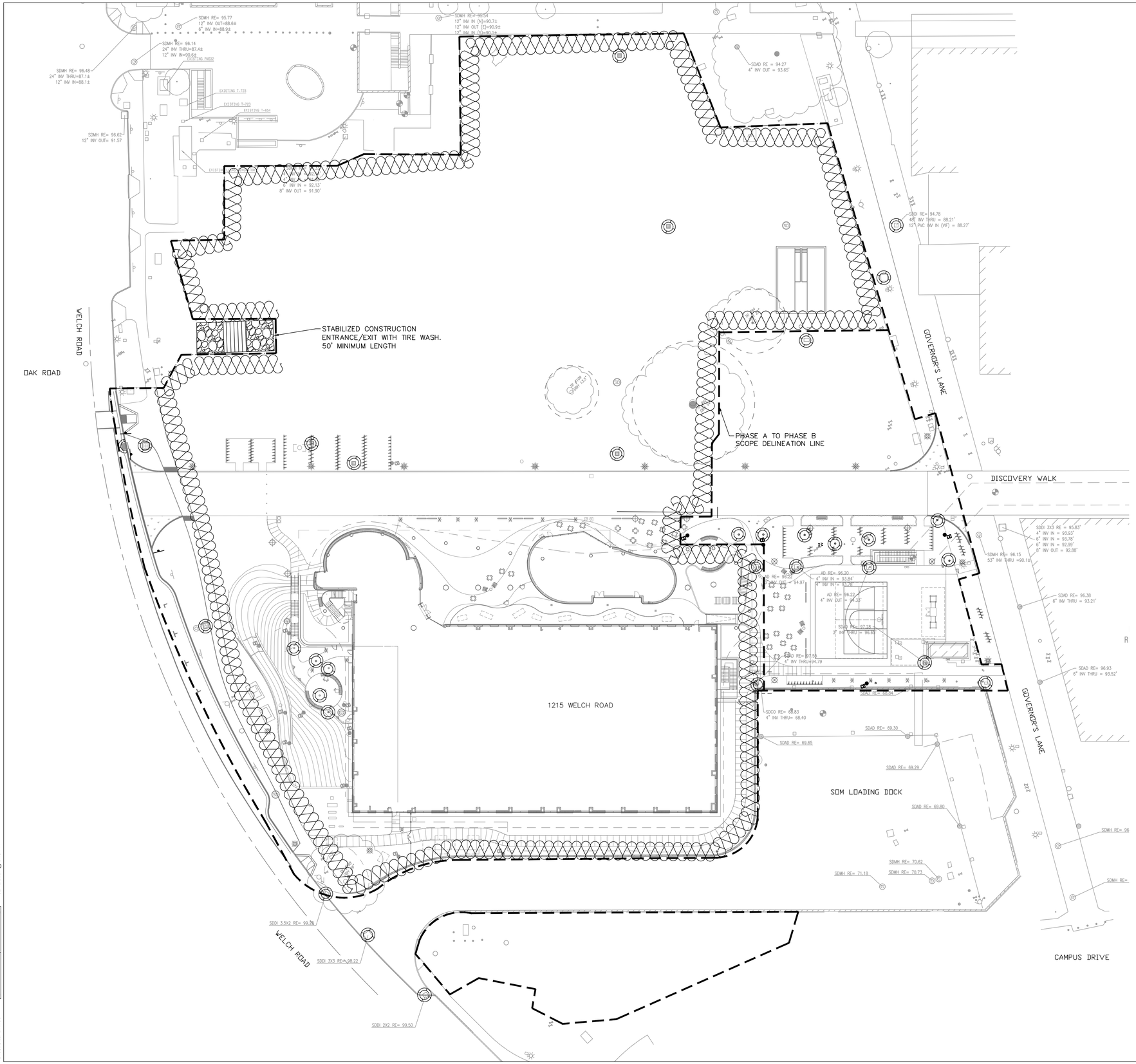

LEGEND

- STORM DRAIN INLET PROTECTION PER CASQA DETAIL SE-10 (4 / BMP-2)
- FIBER ROLL PER CASQA DETAIL SE-5 (1 / BMP-2)
- LIMIT OF WORK

NOTES

1. SEE COUNTY OF SANTA CLARA EROSION CONTROL TEMPLATES BMP1 AND BMP2 FOR BEST MANAGEMENT PRACTICES AND EROSION CONTROL DETAILS.
2. FIBER ROLLS SHALL BE INSTALLED AROUND THE PERIMETER ALONG THE CONSTRUCTION FENCE.
3. THIS SHEET IS INTENDED FOR EROSION CONTROL ONLY.
4. THIS PLAN MAY NOT COVER ALL THE SITUATIONS THAT ARISE DURING CONSTRUCTION DUE TO UNANTICIPATED FIELD CONDITIONS. IN GENERAL, THE CONTRACTOR IS RESPONSIBLE FOR KEEPING ANY SEDIMENT FROM LEAVING THE SITE. FIBER ROLLS, SAND BAGS AND ADDITIONAL SILT FENCES SHALL BE USED BY THE CONTRACTOR ON AN AS NEEDED BASIS TO INHIBIT SILT FROM LEAVING THE SITE AND ENTERING THE STORM DRAIN SYSTEM. ALL EXISTING, TEMPORARY OR PERMANENT CATCH BASINS SHALL USE THE SEDIMENT BARRIERS SHOWN ON THIS PLAN.
5. THE PROJECT DISTURBS OVER 1 ACRE OF SOIL AND THEREFORE REQUIRES COVERAGE UNDER THE CONSTRUCTION GENERAL PERMIT (ORDER WQ 2022-057-DWG NPDES NO. CAS000002). THE WASTE DISCHARGE IDENTIFICATION (WDID) NUMBER IS 2 43C403804. THE CONTRACTOR IS RESPONSIBLE FOR PROVIDING QUALIFIED SWPPP PRACTITIONER (QSP) AND QUALIFIED SWPPP DEVELOPER (QSD) CONSTRUCTION MONITORING SERVICES UNTIL THE NOTICE OF TERMINATION (NOT) IS APPROVED BY THE STATE WATER BOARD.

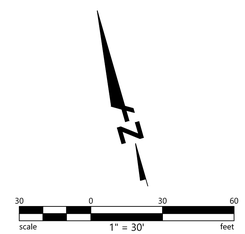

ZGF
ZIMMER GUNSUL FRASCA ARCHITECTS LLP

DENVER
LOS ANGELES
NEW YORK
PORTLAND
SEATTLE
WASHINGTON, DC
VANCOUVER, BC

1223 SW Washington Street
Suite 200
Portland, OR 97205
503.224.3860
www.zgf.com

ZGF Project Number P26717.wrss

Consultant

BKF
7901 Stoneridge Drive,
SUITE 360
PLEASANTON, CA 94588
(925) 396-7700
www.bkf.com

Full Design Team Roster on Sheet A0.02

Client and Project Information

Stanford MEDICINE

STANFORD UNIVERSITY
SCHOOL OF MEDICINE
1215 Welch Rd
Stanford, CA 94305

Original Issue
ASA SUBMITTAL 12.06.2024

Revisions
RESUBMITTAL 02.28.2025
RESUBMITTAL 04.22.2025

Key Plan and Orientation

Sheet Status
NOT FOR CONSTRUCTION

Sheet Title
EROSION CONTROL PLAN

Sheet Number
ASA-C8.00

Current Issue
ASA SUBMITTAL

Current Issue Date
12.06.2024

Sheet Size 24 x 36 0" 1" 2" 03/13/2024 @ 3:45 PM

3 Stabilized Construction Entrance/Exit

CASQA Detail TC-1

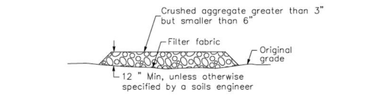

SECTION B–B
NTS

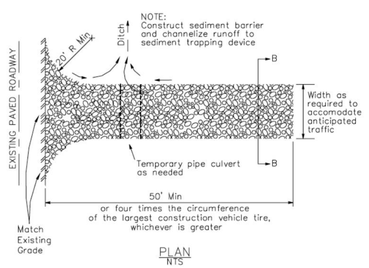

PLAN
NTS

1 Silt Fence

CASQA Detail SE-1

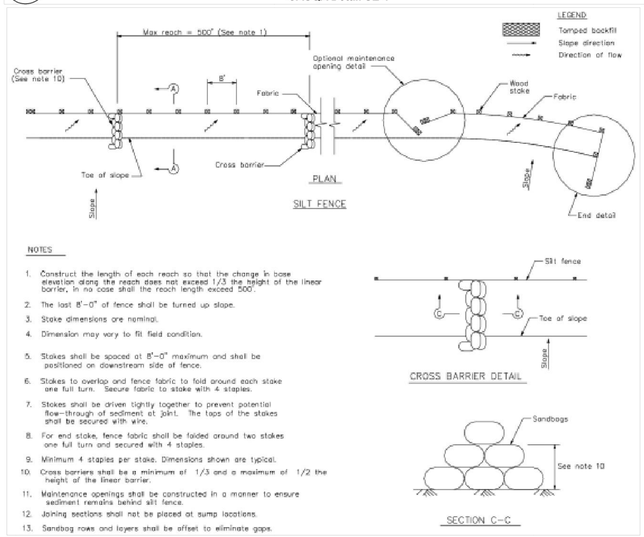

4 Velocity Dissipation Devices

CASQA Detail EC-10

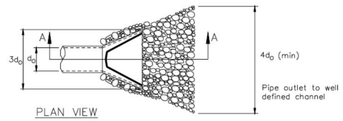

PLAN VIEW

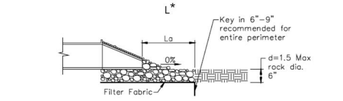

SECTION A–A

* Length per ABAG Design Standards

2 Silt Fence

CASQA Detail SE-1

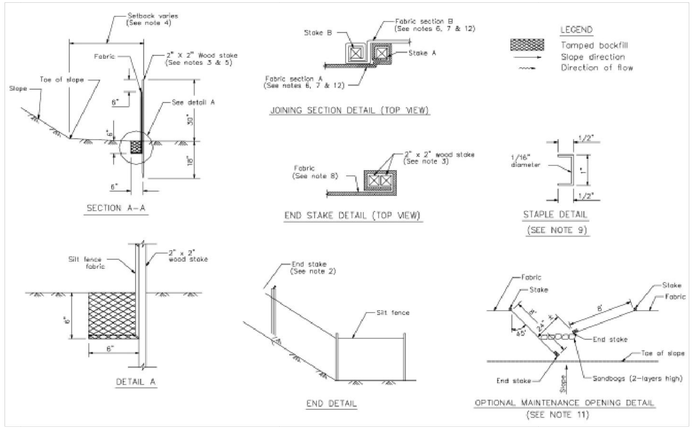

Source for Graphics: California Stormwater BMP Handbook, California Stormwater Quality Association, January 2003.
Available from www.cabmphandbooks.com.

STANDARD BEST MANAGEMENT PRACTICE NOTES

1. Solid and Demolition Waste Management: Provide designated waste collection areas and containers on site away from streets, gutters, storm drains, and waterways, and arrange for regular disposal. Waste containers must be watertight and covered at all times except when waste is deposited. Refer to Erosion & Sediment Control Field Manual, 4th Edition (page C3) or latest.
2. Hazardous Waste Management: Provide proper handling and disposal of hazardous wastes by a licensed hazardous waste material hauler. Hazardous wastes shall be stored and properly labeled in sealed containers constructed of suitable materials. Refer to Erosion & Sediment Control Field Manual, 4th Edition (pages C-5 to C-6) or latest.
3. Spill Prevention and Control: Provide proper storage areas for liquid and solid materials, including chemicals and hazardous substances, away from streets, gutters, storm drains, and waterways. Spill control materials must be kept on site where readily accessible. Spills must be cleaned up immediately and contaminated soil disposed properly. Refer to Erosion & Sediment Control Field Manual, 4th Edition (pages C-7 to C-8, C-13 to C-14) or latest.
4. Vehicle and Construction Equipment Service and Storage: An area shall be designated for the maintenance, where on-site maintenance is required, and storage of equipment that is protected from stormwater run-on and runoff. Measures shall be provided to capture any waste oils, lubricants, or other potential pollutants and these wastes shall be properly disposed of off site. Fueling and major maintenance/repair, and washing shall be conducted off-site whenever feasible. Refer to Erosion & Sediment Control Field Manual, 4th Edition (page C9) or latest.
5. Material Delivery, Handling and Storage: In general, materials should not be stockpiled on site. Where temporary stockpiles are necessary and approved by the County, they shall be covered with secured plastic sheeting or tarp and located in designated areas near construction entrances and away from drainage paths and waterways. Barriers shall be provided around storage areas where materials are potentially in contact with runoff. Refer to Erosion & Sediment Control Field Manual, 4th Edition (pages C-11 to C-12) or latest.
6. Handling and Disposal of Concrete and Cement: When concrete trucks and equipment are washed on-site, concrete wastewater shall be contained in designated containers or in a temporary lined and watertight pit where wasted concrete can harden for later removal. If possible have concrete contractor remove concrete wash water from site. In no case shall fresh concrete be washed into the road right-of-way. Refer to Erosion & Sediment Control Field Manual, 4th Edition (pages C-15 to C-16) or latest.
7. Pavement Construction Management: Prevent or reduce the discharge of pollutants from paving operations, using measures to prevent run-on and runoff pollution and properly disposing of wastes. Avoid paving in the wet season and reschedule paving when rain is in the forecast. Residue from saw-cutting shall be vacuumed for proper disposal. Refer to Erosion & Sediment Control Field Manual, 4th Edition (pages C-17 to C-18) or latest.
8. Contaminated Soil and Water Management: Inspections to identify contaminated soils should occur prior to construction and at regular intervals during construction. Remediating contaminated soil should occur promptly after identification and be specific to the contaminant identified, which may include hazardous waste removal. Refer to Erosion & Sediment Control Field Manual, 4th Edition (pages C-19 to C-20) or latest.
9. Sanitary/Septic Water Management: Temporary sanitary facilities should be located away from drainage paths, waterways, and traffic areas. Only licensed sanitary and septic waste haulers should be used. Secondary containment should be provided for all sanitary facilities. Refer to Erosion & Sediment Control Field Manual, 4th Edition (page C-21) or latest.
10. Inspection & Maintenance: Areas of material and equipment storage sites and temporary sanitary facilities must be inspected weekly. Problem areas shall be identified and appropriate additional and/or alternative control measures implemented immediately, within 24 hours of the problem being identified.

STANDARD EROSION CONTROL NOTES

1. Sediment Control Management:

   Tracking Prevention & Clean Up: Activities shall be organized and measures taken as needed to prevent or minimize tracking of soil onto the public street system. A gravel or proprietary device construction entrance/exit is required for all sites. Clean up of tracked material shall be provided by means of a street sweeper prior to an approaching rain event, or at least once at the end of each workday that material is tracked, or, more frequently as determined by the County Inspector. Refer to Erosion & Sediment Control Field Manual, 4th Edition (pages B-31 to B-33) or latest.

   Storm Drain Inlet and Catch Basin Inlet Protection: All inlets within the vicinity of the project and within the project limits shall be protected with gravel bags placed around inlets or other inlet protection. At locations where exposed soils are present, staked fiber roles or staked silt fences can be used. Inlet filters are not allowed due to clogging and subsequent flooding. Refer to Erosion & Sediment Control Field Manual, 4th Edition (pages B-49 to B-51) or latest.

   Storm Water Runoff: No storm water runoff shall be allowed to drain in to the existing and/or proposed underground storm drain system or other above ground watercourses until appropriate erosion control measures are fully installed.

   Dust Control: The contractor shall provide dust control in graded areas as required by providing wet suppression or chemical stabilization of exposed soils, providing for rapid clean up of sediments deposited on paved roads, furnishing construction road entrances and vehicle wash down areas, and limiting the amount of areas disturbed by clearing and earth moving operations by scheduling these activities in phases.

   Stockpiling: Excavated soils shall not be placed in streets or on paved areas. Borrow and temporary stockpiles shall be protected with appropriate erosion control measures(tarps, straw bales, silt fences, ect.) to ensure silt does not leave the site or enter the storm drain system or neighboring watercourse.
2. Erosion Control: During the rainy season, all disturbed areas must include an effective combination of erosion and sediment control. It is required that temporary erosion control measures are applied to all disturbed soil areas prior to a rain event. During the non-rainy season, erosion control measures must be applied sufficient to control wind erosion at the site.
3. Inspection & Maintenance: Disturbed areas of the Project's site, locations where vehicles enter or exit the site, and all erosion and sediment controls that are identified as part of the Erosion Control Plans must be inspected by the Contractor before, during, and after storm events, and at least weekly during seasonal wet periods. Problem areas shall be identified and appropriate additional and/ or alternative control measures implemented immediately, within 24 hours of the problem being identified.
4. Project Completion: Prior to project completion and signoff by the County Inspector, all disturbed areas shall be reseeded, planted, or landscaped to minimize the potential for erosion on the subject site.
5. It shall be the Owner's/Contractor's responsibility to maintain control of the entire construction operation and to keep the entire site in compliance with the erosion control plan.
6. Erosion and sediment control best management practices shall be operable year round or until vegetation is fully established on landscaped surfaces.

Project Information

Best Management Practices and Erosion Control Details Sheet 1
County of Santa Clara

BMP-1

ZGF
ZIMMER GUNSUL FRASCA ARCHITECTS LLP

DENVER
LOS ANGELES
NEW YORK
PORTLAND
SEATTLE
WASHINGTON, DC
VANCOUVER, BC

1223 SW Washington Street
Suite 200
Portland, OR 97205
503.224.3860
www.zgf.com

ZGF Project Number P26717.wrss

Consultant

BKF
7901 Stoneridge Drive, SUITE 360
PLEASANTON, CA 94588
(925) 396-7700
www.bkf.com

Full Design Team Roster on Sheet A0.02

Client and Project Information

Stanford MEDICINE

STANFORD UNIVERSITY
SCHOOL OF MEDICINE
1215 Welch Rd
Stanford, CA 94305

Original Issue
ASA SUBMITTAL 12.06.2024

Revisions
RESUBMITTAL 02.28.2025
RESUBMITTAL 04.22.2025

Key Plan and Orientation

Sheet Status
NOT FOR CONSTRUCTION

Sheet Title
EROSION CONTROL DETAILS BMP-1

Sheet Number
ASA-C8.01

Current Issue
ASA SUBMITTAL

Current Issue Date
12.06.2024

Sheet Size 24 x 36 | 0" | 1" | 2" | 03/13/2024 @ 3:45 PM

7 Geotextiles and Mats

CASQA Detail EC-7

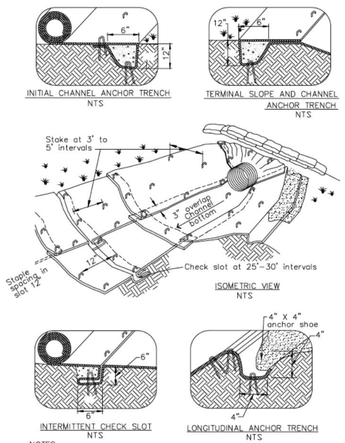

NOTES:
1. Check slots to be constructed per manufacturers specifications.
2. Staking or stapling layout per manufacturers specifications.
3. Install per manufacturer's recommendations

TYPICAL INSTALLATION DETAIL

5 Geotextiles and Mats

CASQA Detail EC-7

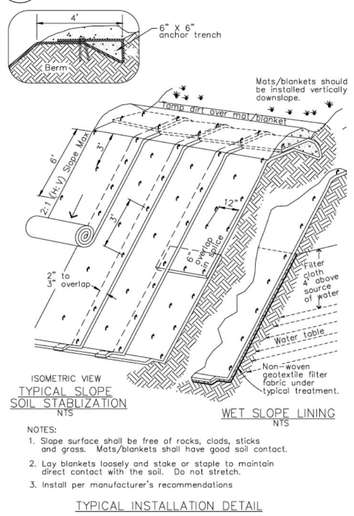

NOTES:
1. Slope surface shall be free of rocks, clods, sticks and grass. Mats/blankets shall have good soil contact.
2. Lay blankets loosely and stake or staple to maintain direct contact with the soil. Do not stretch.
3. Install per manufacturer's recommendations

TYPICAL INSTALLATION DETAIL

3 Entrance/Outlet Tire Wash

CASQA Detail TC-3

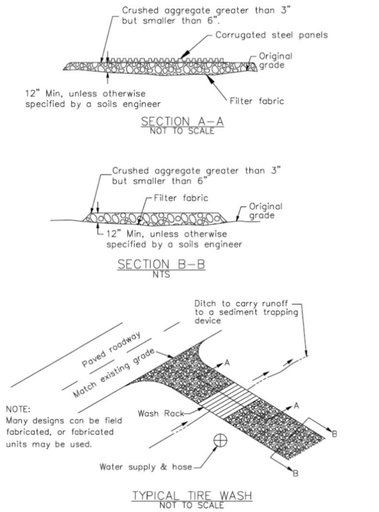

NOTE:
Many designs can be field fabricated, or fabricated units may be used.

TYPICAL TIRE WASH
NOT TO SCALE

1 Fiber Rolls

CASQA Detail SE-5

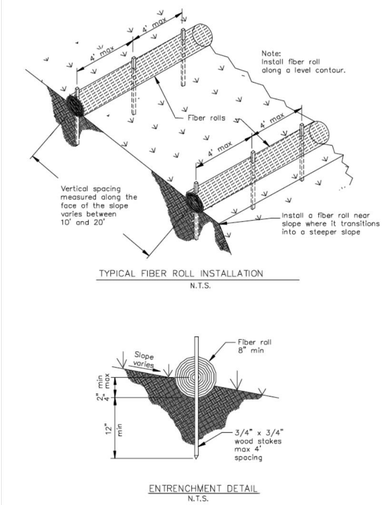

8 Storm Drain Inlet Protection

CASQA Detail SE-10

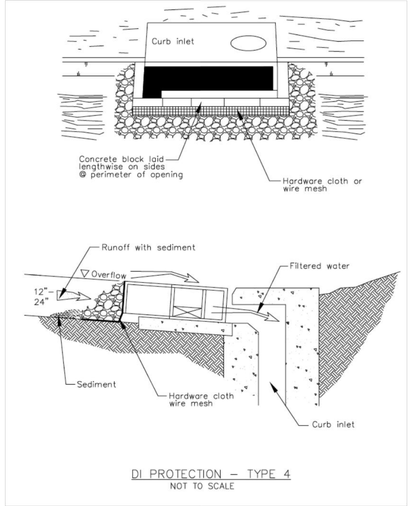

DI PROTECTION – TYPE 4
NOT TO SCALE

Source for Graphics: California Stormwater BMP Handbook, California Stormwater Quality Association, January 2003.
Available from www.cabmphandbooks.com.

6 Storm Drain Inlet Protection

CASQA Detail SE-10

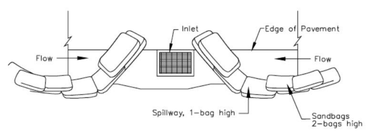

TYPICAL PROTECTION FOR INLET ON SUMP

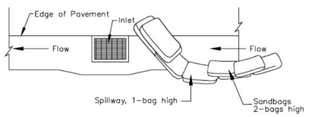

TYPICAL PROTECTION FOR INLET ON GRADE

NOTES:
1. Intended for short-term use.
2. Use to inhibit non-storm water flow.
3. Allow for proper maintenance and cleanup.
4. Bags must be removed after adjacent operation is completed
5. Not applicable in areas with high silts and clays without filter fabric.

DI PROTECTION TYPE 3
NOT TO SCALE

4 Storm Drain Inlet Protection

CASQA Detail SE-10

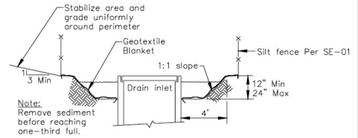

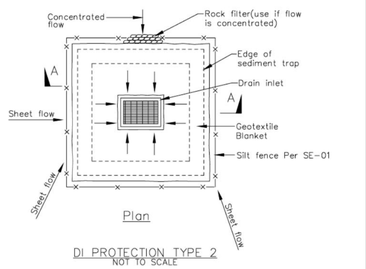

DI PROTECTION TYPE 2
NOT TO SCALE

Notes
1. For use in cleared and grubbed and in graded areas.
2. Shape basin so that longest inflow area faces longest length of trap.
3. For concentrated flows, shape basin in 2:1 ratio with length oriented towards direction of flow.

2 Concrete Waste Management

CASQA Detail WM-8

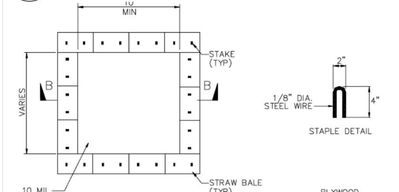

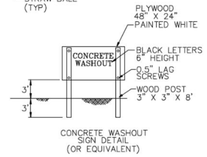

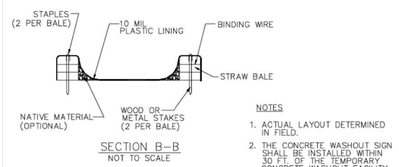

NOTES
1. ACTUAL LAYOUT DETERMINED IN FIELD.
2. THE CONCRETE WASHOUT SIGN SHALL BE INSTALLED WITHIN 30 FT. OF THE TEMPORARY CONCRETE WASHOUT FACILITY.

Best Management Practices and Erosion Control Details Sheet 2
County of Santa Clara

BMP-2

Sheet Size: 24 x 36 | 0" | 1" | 2" | 03/13/2024 @ 3:45 PM

ZGF
ZIMMER GUNSUL FRASCA ARCHITECTS LLP

DENVER
LOS ANGELES
NEW YORK
PORTLAND
SEATTLE
WASHINGTON, DC
VANCOUVER, BC

1223 SW Washington Street
Suite 200
Portland, OR 97205
503.224.3860
www.zgf.com

ZGF Project Number P26717.wrss

Consultant

BKF
7901 Stoneridge Drive, SUITE 360
PLEASANTON, CA 94588
(925) 396-7700
www.bkf.com

Full Design Team Roster on Sheet A0.02

Client and Project Information

Stanford MEDICINE

STANFORD UNIVERSITY
SCHOOL OF MEDICINE
1215 Welch Rd
Stanford, CA 94305

Original Issue
ASA SUBMITTAL 12.06.2024

Revisions
RESUBMITTAL 02.28.2025
RESUBMITTAL 04.22.2025

Project Information

Key Plan and Orientation

Sheet Status
NOT FOR CONSTRUCTION

Sheet Title
EROSION CONTROL DETAILS BMP-2

Sheet Number
ASA-C8.02

Current Issue
ASA SUBMITTAL

Current Issue Date
12.06.2024

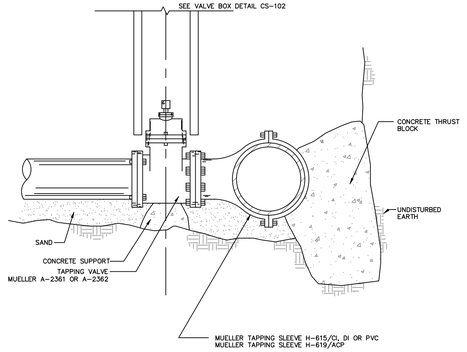

STANFORD UNIVERSITY FACILITY OPERATIONS				DWG.
Drawing Title: TAPPING SLEEVE AND VALVE				CS-101
Scale: NTS	Check: JHK	Rev. By: SSP	Rev. Date: 01/06/21	

1 — **TAPPING SLEEVE AND VALVE**
N.T.S.

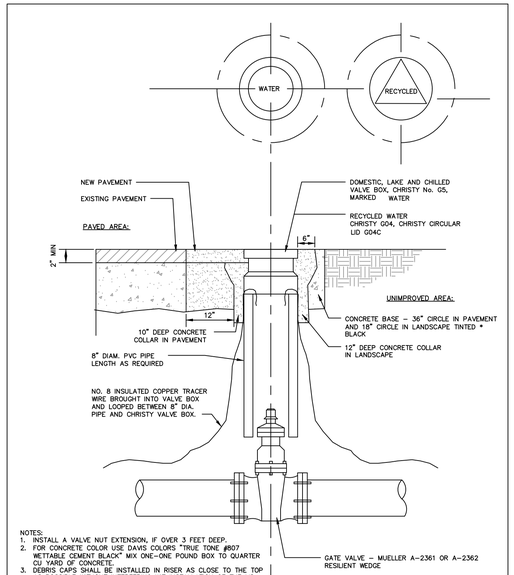

NOTES:
1. INSTALL A VALVE NUT EXTENSION, IF OVER 3 FEET DEEP.
2. FOR CONCRETE COLOR USE DAVIS COLORS "TRUE TONE #807 WETTABLE CEMENT BLACK" MIX ONE-ONE POUND BOX TO QUARTER CU YARD OF CONCRETE.
3. DEBRIS CAPS SHALL BE INSTALLED IN RISER AS CLOSE TO THE TOP AS POSSIBLE WITHOUT INTERFERING WIT INSTALLATION OF THE LID. DEBRIS CAPS SHALL BE DCB25 FROM SW SERVICES.
   COLORS FOR HANDLES SHALL BE:
   BLUE – DOMESTIC WATER
   BLACK – LAKE WATER
   PURPLE – RECYCLED WATER
   GREEN – CHILLED WATER SUPPLY
   RED – CHILLED WATER RETURN
   YELLOW – HOT WATER SUPPLY
   WHITE – HOT WATER RETURN

STANFORD UNIVERSITY FACILITY OPERATIONS				DWG.
Drawing Title: GATE VALVE BOX				CS-102
Scale: NTS	Check: RACHEL B.	Rev. By: JJ	Rev. Date: 02/15/24	

2 — **GATE VALVE BOX**
N.T.S.

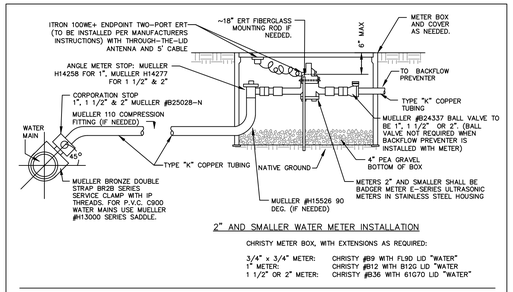

2" AND SMALLER WATER METER INSTALLATION

CHRISTY METER BOX, WITH EXTENSIONS AS REQUIRED:

3/4" x 3/4" METER: CHRISTY #B9 WITH FL90 LID "WATER"
1" METER: CHRISTY #B12 WITH B12G LID "WATER"
1 1/2" OR 2" METER: CHRISTY #B36 WITH 61G70 LID "WATER"

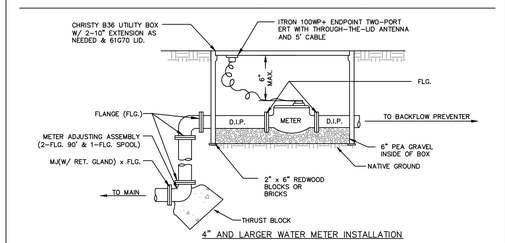

4" AND LARGER WATER METER INSTALLATION

NOTES:

1. CHRISTY B36 METER BOX WITH EXTENSIONS AS REQUIRED. STEEL CHECKER PLATE LID WITH METER READING LID (61G70).
2. BADGER METER TURBO SERIES WITH RTR REGISTER AND ITRON PIT ERT (100WP+,TWO-PORT NON-LEAK DETECTOR ONLY) STRAIGHT READING CF REGISTER.
3. 6" PEA GRAVEL REQUIRED IN BOTTOM OF BOX FOR 4" METERS AND LARGER. 4" PEA GRAVEL REQUIRED FOR 2" METERS AND SMALLER.
4. IF REDUCERS ARE REQUIRED, INSTALL OUTSIDE OF BOX.
5. INSTALL FIBERGLASS ROD INSIDE OF BOX TO HOLD UP THE SMART METER COMPONENTS IF ERT NOT ATTACHABLE WITH METER. FIBERGLASS ROD SHALL BE 1/2" DIAMETER AND BE APPROPRIATELY SIZED FOR THE METER BOX. NATIONAL MODEL NOS. 7659 FOR 12", 3752 FOR 18", AND 4279 FOR 36".
6. IF METER BOX TO BE INSTALLED IN H-20 AREA, GRAINGER ADHESIVE PAD (ITEM# 38A885, MFR. MODEL# 102182BXK, BLACK, 4" X 4", ABS PLASTIC AND ACRYLIC PK100) TO BE ADHERED TO ANTENNA TO MINIMIZE DISPLACEMENT.
7. FOR METERS LOCATED IN LANDSCAPED AREAS OR AREAS NOT RATED FOR H-20 TRAFFIC LOADING, METER BOX LIDS SHALL BE CHRISTY/OLDCASTLE FIBRELYTE.

STANFORD UNIVERSITY FACILITY OPERATIONS				DWG.
Drawing Title: WATER METER INSTALLATION				CS-123
Scale: NTS	Check: ADAM S.	Rev. By: AS	Rev. Date: 06/10/24	

3 — **WATER METER INSTALLATION**
N.T.S.

Table 1 – Utility Clearance Requirements

Horizontal	Comm	Elec	Gas	DW	FW	RW	HHW	CHW	STEAM	SD	SS
Comm	2'	2'	2'	2'	2'	2'	2'	2'	2'	2'	2'
Elec	2'	-	3'	3'	3'	1'	3'			5'	3'
Gas	2'	3'	-	3'	3'	3'		3'		5'	3'
DW	2'	3'	3'	-	3'	4'	4'	3'		4'	10'
FW	2'	3'	3'	3'	-	3'	4'	3'		5'	10'
RW	2'	3'	3'	4'	3'	-	2'	3'		5'	10'
HHW	2'	1'		4'	4'	2'	1.5'	2'	3'	1'	1'
CHW	2'	3'	3'	3'	3'	3'	2'	1.5'		5'	3'
STEAM	2'						3'				
SD	2'	5'	5'	4'	5'	5'	1'	5'		-	5'
SS	2'	3'	3'	10'	10'	10'	1'	3'		5'	-

Vertical	Comm	Elec	Gas	DW	FW	RW	HHW	CHW	STEAM	SD	SS
Comm	-										
Elec		-				1'					
Gas			-								
DW				-		1'	1'			1'	1'
FW					-		1'				
RW				1'		-	1'				
HHW		1'		1'	1'	1'	1.5'	1.5'	3'	1'	1'
CHW		1'		1'	1'	1'	1.5'	1.5'	3'	1'	1'
STEAM							3'				
SD	1'	1'	1'	1'	1'	1'	1'	1'		1'	1'
SS				1'			1'				-

DW needs to be 1' above SS/RW/SD lines running parallel (@10' horiz.) or crossing.
Aim for 1' vert. clearance for all other utilities, but evaluate less on a case-by-case basis.
Highlighted clearances are absolute minimums, others may be reduced in some scenarios, where constrained.

4 — **MINIMUM UTILITY CLEARANCE REQUIREMENTS**
N.T.S.

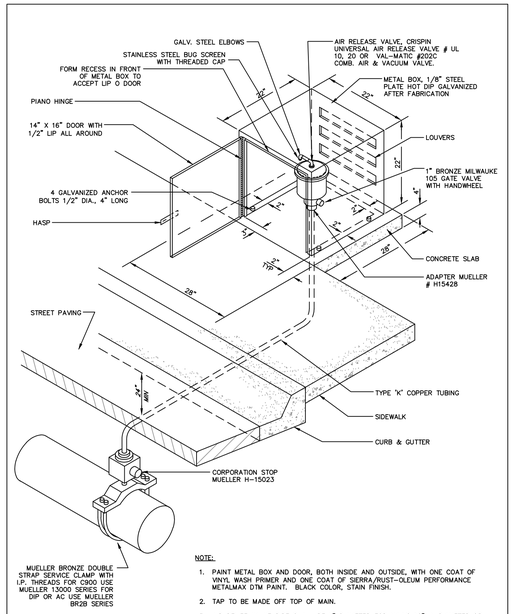

NOTE:
1. PAINT METAL BOX AND DOOR, BOTH INSIDE AND OUTSIDE, WITH ONE COAT OF VINYL WASH PRIMER AND ONE COAT OF SIERRA/RUST-OLEUM PERFORMANCE METALMAX DTM PAINT. BLACK COLOR, STAIN FINISH.
2. TAP TO BE MADE OFF TOP OF MAIN.
3. AIR RELIEF VALVE PIPE SHALL BE 1" DIAMETER FOR MAINS 12" IN DIAMETER OR SMALLER, OR 2" DIAMETER FOR ALL OTHER SIZED MAINS.

STANFORD UNIVERSITY FACILITY OPERATIONS				DWG.
Drawing Title: AIR RELIEF VALVE ASSEMBLY				CS-104
Scale: NTS	Check: RACHEL B.	Rev. By: JEW	Rev. Date: 02/03/2023	

5 — **AIR RELIEF VALVE**
N.T.S.

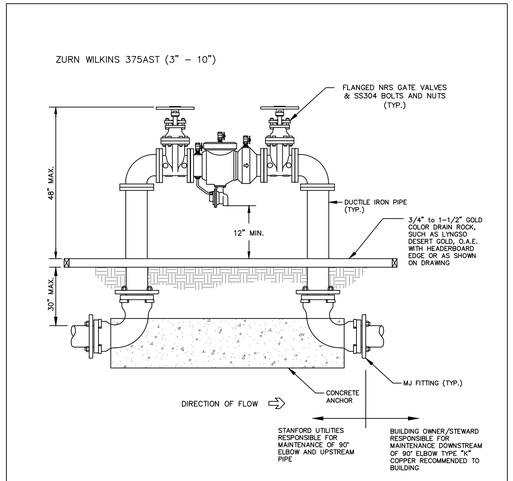

NOTES:

1. INLET AND OUTLET PIPES MAY VARY IN ELEVATION BASED ON BUILDING ENTRANCE LOCATIONS AND ELEVATIONS. CONSTRUCT THRUST BLOCKS AS REQUIRED.
2. PAINT BACKFLOW WITH SIERRA/RUST-OLEUM PERFORMANCE METALMAX DTM PAINT. BLACK COLOR, SATIN FINISH.
3. ADD CATHODIC PROTECTION WHEN SHOWN ON DRAWINGS.
4. RESTRAIN ALL MECHANICAL JOINT FITTINGS WITH MEGA-LUG RESTRAINTS.
5. LOCATION TO BE SUBMITTED FOR APPROVAL TO UNIVERSITY ARCHITECT/CAMPUS PLANNING.
6. ZURN WILKINS MODEL 375AST REDUCED PRESSURE ASSEMBLY FOR DOMESTIC SERVICE SHALL BE USED. UPON APPROVAL ZURN WILKINS MODEL 475ST REDUCED PRESSURE ASSEMBLY FOR DOMESTIC SERVICE CAN BE USED.

STANFORD UNIVERSITY FACILITY OPERATIONS				DWG.
Drawing Title: DOMESTIC WATER BACKFLOW REDUCED PRESSURE ASSY.				CS-133
Scale: NTS	Check: SB	Rev. By: SB	Rev. Date: 06/10/24	

6 — **DOMESTIC WATER BACKFLOW REDUCED PRESSURE ASSY.**
N.T.S.

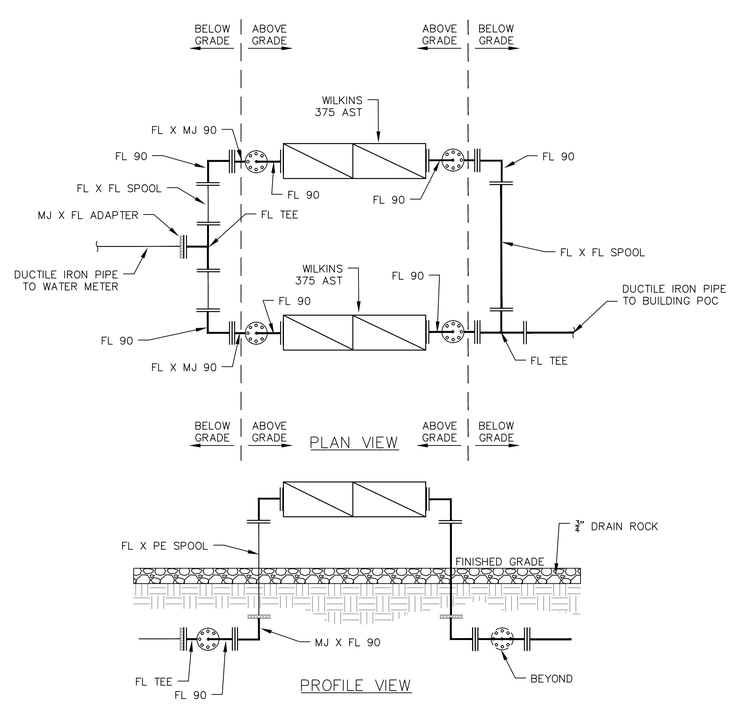

7 — **REDUCED PRESSURE PRINCIPAL BACKFLOW INSTALLATION DETAIL**
N.T.S.

ZGF
ZIMMER GUNSUL FRASCA ARCHITECTS LLP

DENVER
LOS ANGELES
NEW YORK
PORTLAND
SEATTLE
WASHINGTON, DC
VANCOUVER, BC

1223 SW Washington Street
Suite 200
Portland, OR 97205
503.224.3860
www.zgf.com

ZGF Project Number P26717.wrss

Consultant

BKF
7901 Stoneridge Drive, SUITE 360
PLEASANTON, CA 94588
(925) 396-7700
www.bkf.com

Full Design Team Roster on Sheet A0.02

Client and Project Information

Stanford MEDICINE

STANFORD UNIVERSITY SCHOOL OF MEDICINE
1215 Welch Rd
Stanford, CA 94305

Original Issue
ASA SUBMITTAL 12.06.2024

Revisions
RESUBMITTAL 02.28.2025
RESUBMITTAL 04.22.2025

Key Plan and Orientation

Sheet Status
NOT FOR CONSTRUCTION

Sheet Title
CIVIL CONSTRUCTION DETAILS

Sheet Number
ASA-C9.00

Current Issue
ASA SUBMITTAL

Current Issue Date
12.06.2024

Sheet Size: 24 x 36 | 0" | 1" | 2" | 03/13/2024 @ 3:45 PM

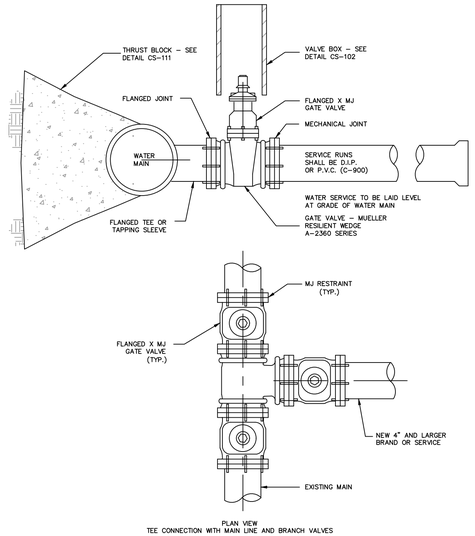

PLAN VIEW
TEE CONNECTION WITH MAIN LINE AND BRANCH VALVES

NOTE:
1. TAPPING SLEEVE CONNECTION SHALL BE REVIEWED AND APPROVED BY STANFORD UTILITIES
2. ADD CATHODIC PROTECTION WHEN SHOWN ON DRAWINGS

STANFORD UNIVERSITY FACILITY OPERATIONS				DWG.
Drawing Title: WATER SERVICES 4" AND LARGER				CS-122
Scale: NTS	Check: STEVE BUI	Rev. By: OG	Rev. Date: 01/05/17	

1 — WATER SERVICES 4" AND LARGER
N.T.S.

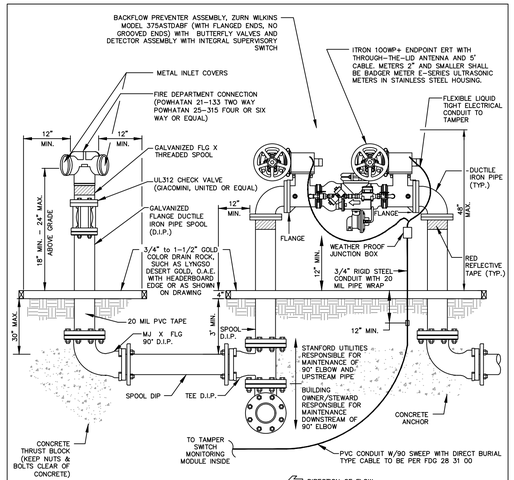

NOTES:
1. SEE STANFORD FACILITIES DESIGN GUIDELINESS, SECTION 33 10 01. FOR ADDITIONAL INFORMATION AND REQUIREMENTS FOR REDUCED PRESSURE ZONE BACKFLOW PREVENTER ASSEMBLIES.
2. INLET AND OUTLET PIPES MAY VARY IN ELEVATION BASED ON BUILDING ENTRANCE LOCATIONS AND ELEVATIONS. CONSTRUCT THRUST BLOCKS AS REQUIRED.
3. FDC SHALL BE ACCESSIBLE TO FIRE DEPARTMENT IN ACCORDANCE WITH FIRE MARSHAL.
4. BACKFLOW PREVENTER ASSEMBLY SHALL BE PAINTED WITH SIERRA/RUST-OLEUM PERFORMANCE METALMAX DTM PAINT. BLACK COLOR, STAIN FINISH.
5. ADD CATHODIC PROTECTION WHEN SHOWN ON DRAWINGS.
6. LOCATION TO BE SUBMITTED FOR APPROVAL TO UNIVERSITY ARCHITECT/CAMPUS PLANNING AND TO SUFMO.
7. PROVIDE CODE REQUIRED SIGNAGE PER STANFORD FDG 21 13 00.
8. ZURN WILKINS MODEL 375ASTDABF REDUCED PRESSURE DETECTOR ASSEMBLY (WITH FLANGED ENDS) FOR FIRE SERVICE SHALL BE USED. UPON APPROVAL ZURN WILKINS MODEL 475STDABF REDUCED PRESSURE ASSEMBLY (WITH FLANGED ENDS) FOR FIRE SERVICE CAN BE USED.

STANFORD UNIVERSITY FACILITY OPERATIONS				DWG.
Drawing Title: BACKFLOW PREVENTER ASSY. & FIRE DEPT. CONN.				CS-134
Scale: NTS	Check: SB	Rev. By: JEM	Rev. Date: 06/10/24	

2 — BACKFLOW PREVENTER ASSEMBLY & FIRE DEPARTMENT CONNECTION
N.T.S.

NOTE:
1. FLANGE BOLTS & NUTS SHALL BE KEPT CLEAR OF CONCRETE.
2. SEE PLAN FOR HYDRANT LOCATION.
3. STEEL TIE RODS & CLAMPS ARE NOT ACCEPTABLE.
4. PAINT HYDRANT WHITE.
5. SEE DETAIL CS-172 FOR GUARD POST REQUIREMENTS.
6. WHERE CURB IS ADJACENT TO HYDRANT, HEIGHT OF FLANGE SHALL BE 2" ABOVE CURB.
7. VERIFY HYDRANT LOCATION WITH WATER DEPARTMENT PRIOR TO INSTALLATION.
8. ADD CATHODIC PROTECTION WHEN SHOWN ON DRAWINGS

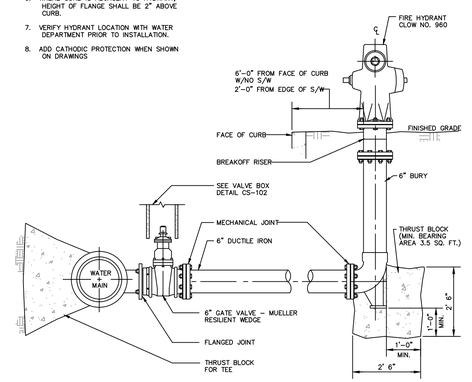

STANFORD UNIVERSITY FACILITY OPERATIONS				DWG.
Drawing Title: FIRE HYDRANT				CS-171
Scale: NTS	Check: JHK	Rev. By: OG	Rev. Date: 12/10/08	

3 — FIRE HYDRANT
N.T.S.

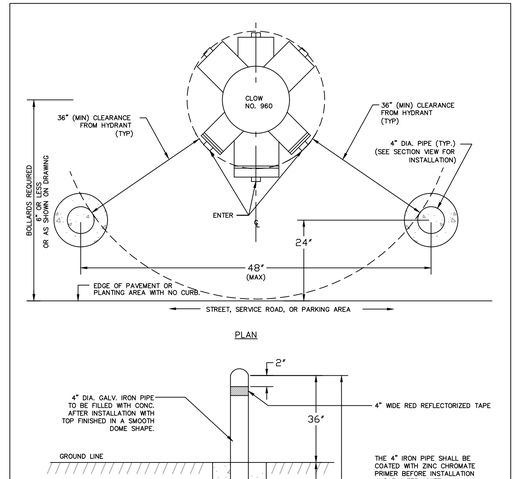

PLAN

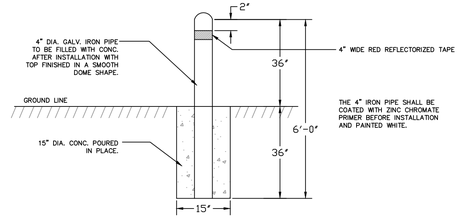

SECTION

NOTE:
1. DETAIL APPLIES TO FIRE HYDRANT AND FIRE DEPARTMENT CONNECTION (FDC)

STANFORD UNIVERSITY FACILITY OPERATIONS				DWG.
Drawing Title: FIRE HYDRANT GUARD POSTS (2 POST CONFIGURATION)				CS-172
Scale: NTS	Check: JHK	Rev. By: OG	Rev. Date: 01/18/11	

4 — FIRE HYDRANT GUARD POSTS
N.T.S.

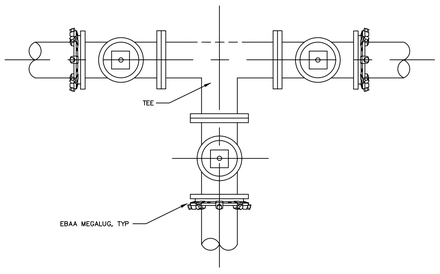

PLAN

NOTES:
1. FLANGES, BOLTS, AND NUTS SHALL BE KEPT CLEAR OF CONCRETE.
2. CENTER BEARING AREA ON PIPE ℄ AND FORCE LINE.
3. EBAA MEGALUG SERIES 1100 TO BE USED ON DUCTILE, 2000PV SERIES TO BE USED ON PVC.
4. REFER TO THRUST BLOCK DETAILS FOR REQUIRED THRUST BLOCK SIZING DIMENSIONS.

STANFORD UNIVERSITY FACILITY OPERATIONS				DWG.
Drawing Title: THREE-VALVE CLUSTER				CS-319
Scale: NTS	Check: JHK	Rev. By: JEM	Rev. Date: 02/03/2023	

5 — THREE-VALVE CLUSTER
N.T.S.

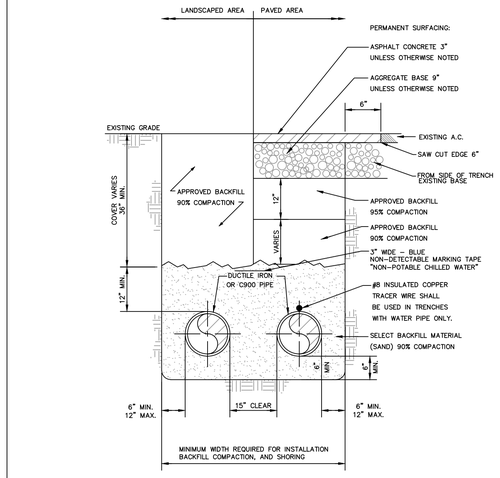

TYPICAL TRENCH SECTION

NOTE:
1. SHORING TO BE PER CAL/OSHA CONSTRUCTION SAFETY ORDERS.
2. RESTORE ALL PAVEMENT MARKINGS IN-KIND WHERE REMOVED AS PART OF TRENCHING OPERATIONS

STANFORD UNIVERSITY FACILITY OPERATIONS				DWG.
Drawing Title: TYPICAL CHILLED WATER TRENCH SECTION				CS-189
Scale: NTS	Check: STEVE BUI	Rev. By: OG	Rev. Date: 01/05/17	

6 — TYP CHILLED WATER TRENCH SECTION
N.T.S.

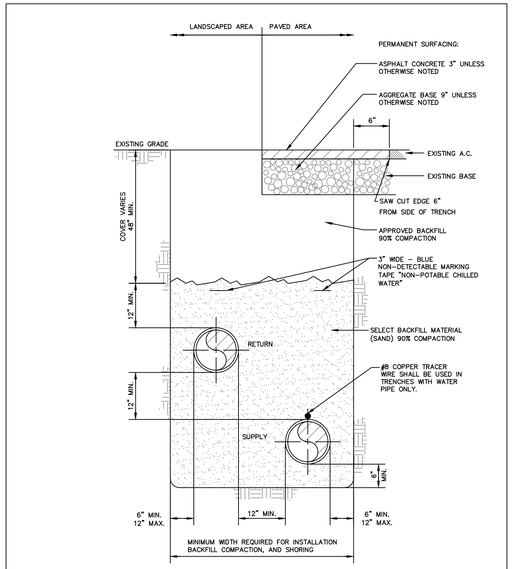

ALTERNATE TRENCH SECTION

NOTE:
1. SHORING TO BE PER CAL/OSHA CONSTRUCTION SAFETY ORDERS.
2. RESTORE ALL PAVEMENT MARKINGS IN-KIND WHERE REMOVED AS PART OF TRENCHING OPERATIONS

STANFORD UNIVERSITY FACILITY OPERATIONS				DWG.
Drawing Title: ALTERNATE CHILLED WATER TRENCH SECTION				CS-190
Scale: NTS	Check: STEVE BUI	Rev. By: OG	Rev. Date: 01/05/17	

7 — ALT CHILLED WATER TRENCH SECTION
N.T.S.

Sheet Size: 24 x 36 | 0" | 1" | 2" | 03/13/2024 @ 3:45 PM

ZGF
ZIMMER GUNSUL FRASCA ARCHITECTS LLP

DENVER
LOS ANGELES
NEW YORK
PORTLAND
SEATTLE
WASHINGTON, DC
VANCOUVER, BC

1223 SW Washington Street
Suite 200
Portland, OR 97205
503.224.3860
www.zgf.com

ZGF Project Number P26717.wrss

Consultant

BKF
7901 Stoneridge Drive, SUITE 360
PLEASANTON, CA 94588
(925) 396-7700
www.bkf.com

Full Design Team Roster on Sheet A0.02

Client and Project Information

Stanford MEDICINE

STANFORD UNIVERSITY SCHOOL OF MEDICINE
1215 Welch Rd
Stanford, CA 94305

Original Issue
ASA SUBMITTAL 12.06.2024

Revisions
RESUBMITTAL 02.28.2025
RESUBMITTAL 04.22.2025

Key Plan and Orientation

Sheet Status
NOT FOR CONSTRUCTION

Sheet Title
CIVIL CONSTRUCTION DETAILS

Sheet Number
ASA-C9.01

Current Issue
ASA SUBMITTAL

Current Issue Date
12.06.2024

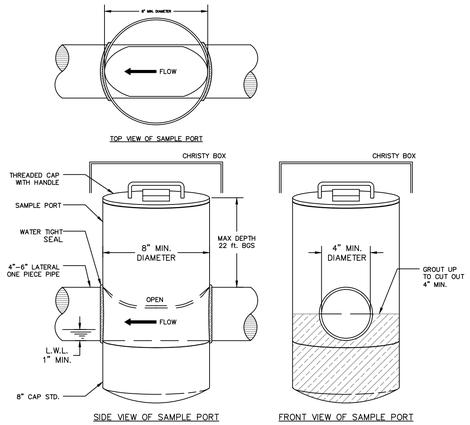

LAB WASTEWATER LINES SHALL BE SEPARATE FROM DOMESTIC SEWAGE AND A SAMPLING PORT ON THE LAB WASTE LINE SHALL BE INSTALLED IN AN EASILY ACCESSIBLE LOCATION OUTSIDE THE BUILDING.

TYPICAL LAB WASTEWATER SAMPLING PORT

NOTES:

1. THE SAMPLING PORT SHALL BE INSTALLED WITH PROPER ACCESS AT A LOCATION WHERE ALL BUILDING LAB WASTES ARE DISCHARGED, BEFORE THE LAB WASTE LINE CONNECTS TO THE DOMESTIC WASTE LINE.
2. THE SAMPLING PORT SHALL BE DESIGNED SO THAT IT IS PERPENDICULAR TO THE LAB WASTE LINE, HAS A MINIMUM 8-INCH DIAMETER, AS VERIFIED WITH STANFORD ENVIRONMENTAL QUALITY STAFF. SAMPLING PORT SHALL HAVE A SCREW-TOP CAP WITH A HANDLE AND IS PROTECTED BY A CHRISTIE BOX.
3. THE SAMPLING PORT SHOULD NOT BE LOCATED IN AN AREA WHERE WATER FROM IRRIGATION OR FLOW FROM STORMWATER RUNOFF CAN ACCUMULATE.
4. SAMPLE PORT SHALL BE INSTALLED ON A GRAVITY LABWASTE DISCHARGE LINE. TOP OF CAP SHALL BE ABOVE OVERFLOW AND ABOVE GRADE. PROPER ACCESS SHALL BE PROVIDED.
5. REFER TO UPC AND THE STANFORD FDG AND APPLICABLE STANDARDS FOR DETAIL PIPE AND INSTALLATION SPECIFICATIONS. DESIGNER SHALL SPECIFY MAXIMUM SLOPE.
6. INCLUDE A 1-1/2" TO 2 INCH EYEBOLT NEARBY FOR EASY LOCK-UP OF SAMPLING EQUIPMENT. 7. CONTACT THE ENVIRONMENTAL QUALITY STAFF AT 650-725-7864 OR 723-9747 WITH ANY QUESTIONS OR COMMENTS.
8. THE MAXIMUM DEPTH OF THE SAMPLE PORT IS 22 FEET BGS.

STANFORD UNIVERSITY FACILITY OPERATIONS				DWG.
Drawing Title: LAB WASTEWATER SAMPLE PORT				CS-117
Scale: NTS	Check: Tracy I.	Rev. By: OG	Rev. Date: 06/09/11	

1 — LAB WASTE SAMPLE PORT
N.T.S.

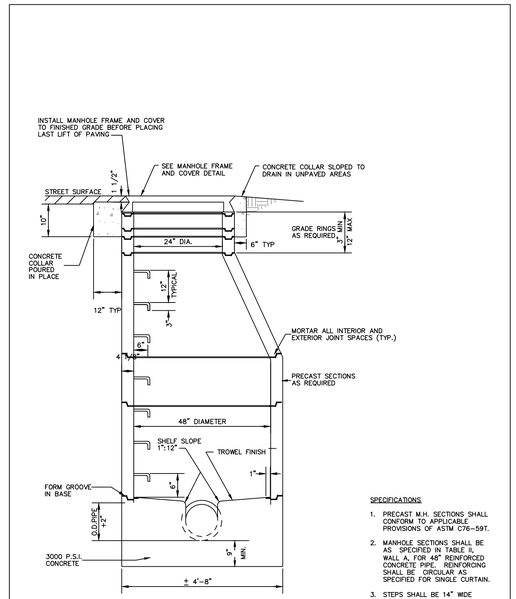

SPECIFICATIONS

1. PRECAST M.H. SECTIONS SHALL CONFORM TO APPLICABLE PROVISIONS OF ASTM C76-59T.
2. MANHOLE SECTIONS SHALL BE AS SPECIFIED IN TABLE II, WALL A, FOR 48" REINFORCED CONCRETE PIPE. REINFORCING SHALL BE CIRCULAR AS SPECIFIED FOR SINGLE CURTAIN.
3. STEPS SHALL BE 14" WIDE
4. FOR MANHOLE BASES SEE CS-203.

STANFORD UNIVERSITY FACILITY OPERATIONS				DWG.
Drawing Title: SANITARY SEWER AND STORM DRAIN				CS-201
Scale: NTS	Check: STEVE BUI	Rev. By: OG	Rev. Date: 01/24/17	

2 — SEWER AND STORM DRAIN MANHOLE
N.T.S.

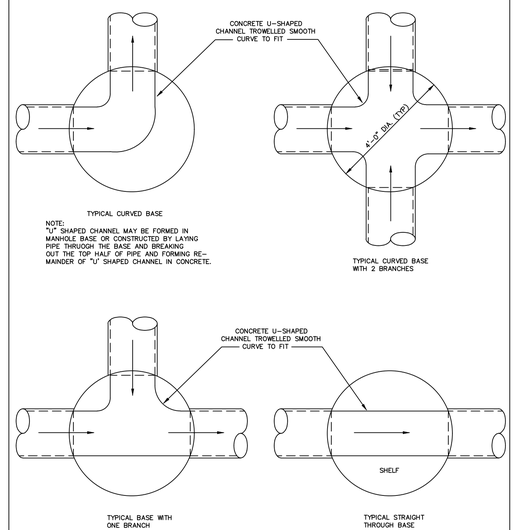

NOTE:
"U" SHAPED CHANNEL MAY BE FORMED IN MANHOLE BASE OR CONSTRUCTED BY LAYING PIPE THROUGH THE BASE AND BREAKING OUT THE TOP HALF OF PIPE AND FORMING RE-MAINDER OF "U" SHAPED CHANNEL IN CONCRETE.

NOTES:
1. FOR MANHOLES SEE CS-201
2. LOWEST POINT ON SHELF SHALL BE EVEN WISTH TOP OF PIPE

STANFORD UNIVERSITY FACILITY OPERATIONS				DWG.
Drawing Title: STANDARD MANHOLE BASE SECTIONS				CS-203
Scale: NTS	Check: KTS	Rev. By: OG	Rev. Date: 01/09	

3 — MANHOLE BASE SECTIONS
N.T.S.

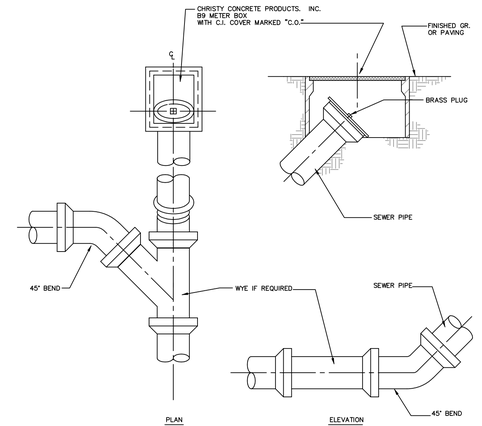

NOTES:
1. CLEANOUT PIPE TO BE SAME SIZE AND MATERIAL AS SEWER MAIN UP TO 8"

STANFORD UNIVERSITY FACILITY OPERATIONS				DWG.
Drawing Title: SANITARY SEWER CLEANOUT				CS-212
Scale: NTS	Check: STEVE BUI	Rev. By: OG	Rev. Date: 01/05/17	

4 — SANITARY SEWER CLEANOUT
N.T.S.

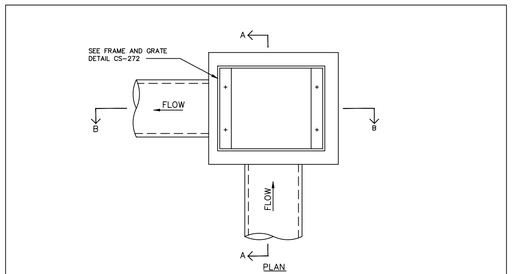

NOTES:
1. MAXIMUM OUTLET PIPE 24" DIAMETER.
2. MINIMUM OUTLET PIPE 12" DIAMETER.
3. SET CROWN OF INLET PIPE AT SAME ELEVATION AS CROWN OF OUTLET PIPE.

STANFORD UNIVERSITY FACILITY OPERATIONS				DWG.
Drawing Title: STORM DRAIN INLET AND CLEANOUT				CS-271
Scale: NTS	Check: KTS	Rev. By: OG	Rev. Date: 01/09	

5 — STORM DRAIN INLET
N.T.S.

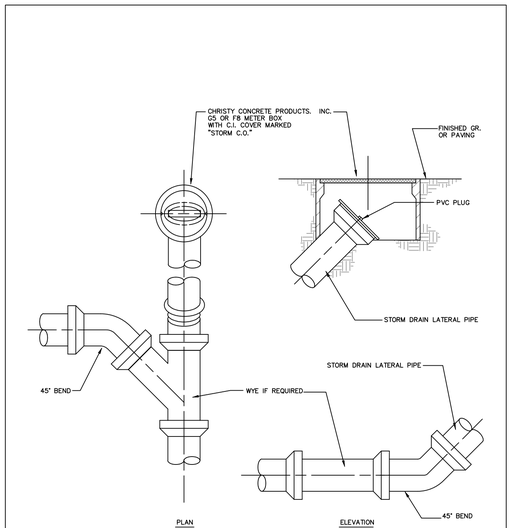

NOTES:
1. CLEANOUT PIPE TO BE SAME SIZE AND MATERIAL AS STORM DRAIN UP TO 8"

STANFORD UNIVERSITY FACILITY OPERATIONS				DWG.
Drawing Title: STORM DRAIN CLEANOUT				CS-314
Scale: NTS	Check: RACHEL B.	Rev. By: JEM	Rev. Date: 02/03/2023	

6 — STORM DRAIN CLEANOUT
N.T.S.

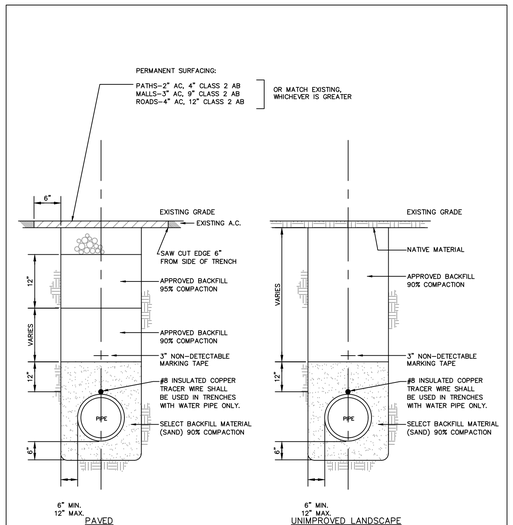

NOTES:
1. SHORING TO BE PER CAL/OSHA CONSTRUCTION SAFETY ORDERS.
2. RESTORE ALL PAVEMENT MARKINGS IN-KIND WHERE REMOVED AS PART OF TRENCHING OPERATIONS

STANFORD UNIVERSITY FACILITY OPERATIONS				DWG.
Drawing Title: TRENCH BACKFILL AND SURFACE RESTORATION				CS-191
Scale: NTS	Check: T. Leong	Rev. By: OG	Rev. Date: 12/01/16	

7 — TRENCH BACKFILL & SURFACE RESTORATION
N.T.S.

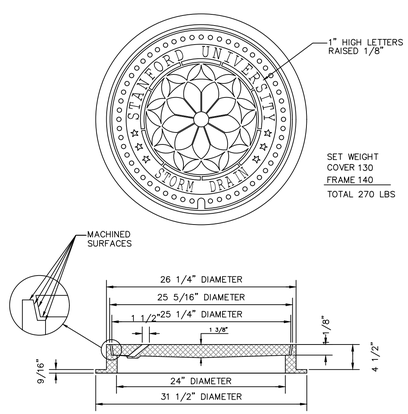

8 — STORM DRAIN MANHOLE FRAME & COVER
N.T.S.

ZGF
ZIMMER GUNSUL FRASCA ARCHITECTS LLP

DENVER
LOS ANGELES
NEW YORK
PORTLAND
SEATTLE
WASHINGTON, DC
VANCOUVER, BC

1223 SW Washington Street
Suite 200
Portland, OR 97205
503.224.3860
www.zgf.com

ZGF Project Number P26717.wrss

Consultant

BKF
7901 Stoneridge Drive,
SUITE 360
PLEASANTON, CA 94588
(925) 396-7700
www.bkf.com

Full Design Team Roster on Sheet A0.02

Client and Project Information

Stanford MEDICINE

STANFORD UNIVERSITY
SCHOOL OF MEDICINE
1215 Welch Rd
Stanford, CA 94305

Original Issue
ASA SUBMITTAL 12.06.2024

Revisions
RESUBMITTAL 02.28.2025
RESUBMITTAL 04.22.2025

Key Plan and Orientation

Sheet Status
NOT FOR CONSTRUCTION

Sheet Title
CIVIL CONSTRUCTION DETAILS

Sheet Number
ASA-C9.02

Current Issue
ASA SUBMITTAL

Current Issue Date
12.06.2024

03/13/2024 @ 3:45 PM
Sheet Size: 24 x 36
2" 1" 0"

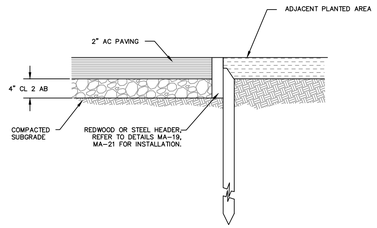

NOTE:

1. FOR SIDEWALK REPAIRS – AREA TO BE REPLACED SHALL BE SAWCUT PRIOR TO REMOVAL.
2. SUBGRADE AND AGGREGATE BASE SHALL BE COMPACTED TO 95%.
3. ASPHALT CONCRETE SHALL BE TYPE ½" MEDIUM
4. AGGREGATE BASE SHALL BE CLASS 2.
5. REDWOOD HEADERS ARE STANDARD ON BOTH SIDES OF THE SIDEWALK, UNLESS ONE SIDE IS AGAINST THE CONCRETE CURB.
6. MATCH WIDTH OF EXISTING SIDEWALK (MINIMUM 4').
7. TYPICAL SIDEWALK CROSS-SLOPE IS 2% TOWARDS THE STREET.

STANFORD UNIVERSITY FACILITY OPERATIONS				DWG.
Drawing Title: ASPHALT SIDEWALK				CS-286
Scale: NTS	Check: STEVE BUI	Rev. By: JJ	Rev. Date: 02/15/24	

1 — ASPHALT SIDEWALK

N.T.S.

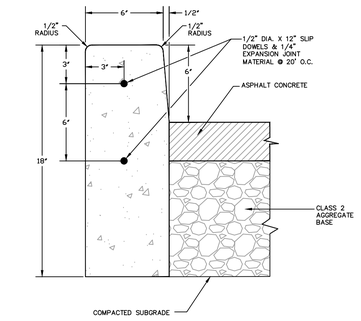

CONCRETE CURB (6")

NOTE:

1. ALL EXPOSED CONCRETE EDGES (HORIZONTAL AND VERTICAL) SHALL BE 1/2" RADIUS

STANFORD UNIVERSITY FACILITY OPERATIONS				DWG.
Drawing Title: CONCRETE CURB (6")				CS-289
Scale: NTS	Check: Tom Z.	Rev. By: O.G.	Rev. Date: 05/17/11	

2 — 6 INCH CONCRETE CURB

N.T.S.

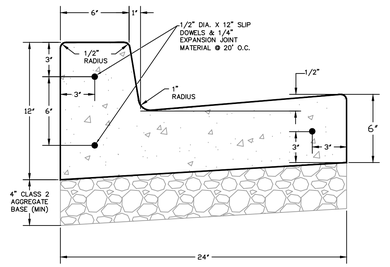

CONCRETE CURB AND GUTTER

NOTE:

1. ALL EXPOSED CONCRETE EDGES (HORIZONTAL AND VERTICAL) SHALL BE 1/2" RADIUS

STANFORD UNIVERSITY FACILITY OPERATIONS				DWG.
Drawing Title: CONCRETE CURB AND GUTTER				CS-291
Scale: NTS	Check: Tom Z.	Rev. By: O.G.	Rev. Date: 05/17/08	

3 — CONCRETE CURB AND GUTTER

N.T.S.

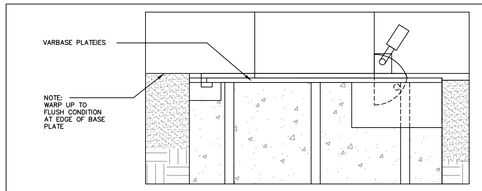

ENLARGED DETAL

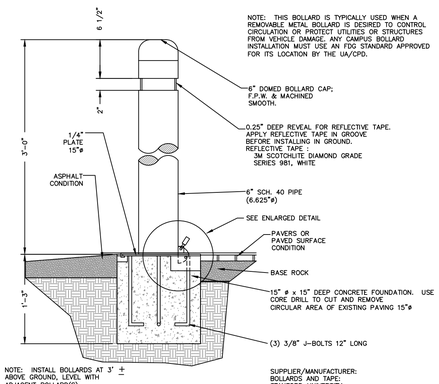

NOTE: THIS BOLLARD IS TYPICALLY USED WHEN A REMOVABLE METAL BOLLARD IS DESIRED TO CONTROL CIRCULATION OR PROTECT UTILITIES OR STRUCTURES FROM VEHICLE DAMAGE. ANY CAMPUS BOLLARD INSTALLATION MUST USE AN FDG STANDARD APPROVED FOR ITS LOCATION BY THE UA/CPD.

NOTE: INSTALL BOLLARDS AT 3' ± ABOVE GROUND, LEVEL WITH ADJACENT BOLLARD(S)

SUPPLIER/MANUFACTURER:
BOLLARDS AND TAPE:
STANFORD UNIVERSITY,
FACILITIES OPERATIONS, METAL SHOP
315 BONAIR SIDING
TEL. (650) 725-3172

STANDARD SPACING: 5'-4" O.C.
FIRE ACCESS SPACING: SEE FDG DETAIL

STANFORD UNIVERSITY FACILITY OPERATIONS				DWG.
Drawing Title: BOLLARD – METAL REMOVEABLE				CS-308
Scale: NTS	Check: D. CANINO	Rev. By:	Rev. Date: 03/07/11	

4 — BOLLARD – METAL REMOVABLE

N.T.S.

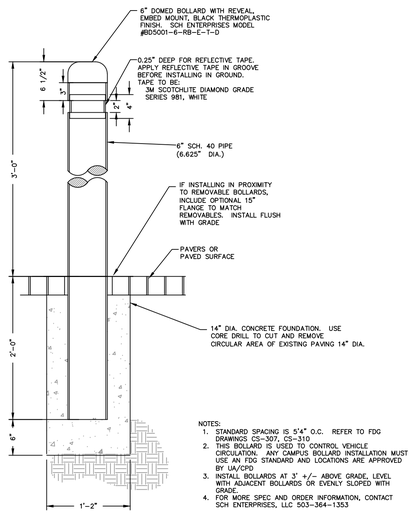

NOTES:

1. STANDARD SPACING IS 5'4" O.C. REFER TO FDG DRAWINGS CS-307, CS-310
2. THIS BOLLARD IS USED TO CONTROL VEHICLE CIRCULATION. ANY CAMPUS BOLLARD INSTALLATION MUST USE AN FDG STANDARD AND LOCATIONS ARE APPROVED BY UA/CPD
3. INSTALL BOLLARDS AT 3' +/- ABOVE GRADE, LEVEL WITH ADJACENT BOLLARDS OR EVENLY SLOPED WITH GRADE
4. FOR MORE SPEC AND ORDER INFORMATION, CONTACT SCH ENTERPRISES, LLC 503-364-1353

STANFORD UNIVERSITY FACILITY OPERATIONS				DWG.
Drawing Title: BOLLARD – METAL FIXED				CS-309
Scale: NTS	Check: D. Brown	Rev. By:	Rev. Date: 01/10/21	

5 — BOLLARD – METAL FIXED

N.T.S.

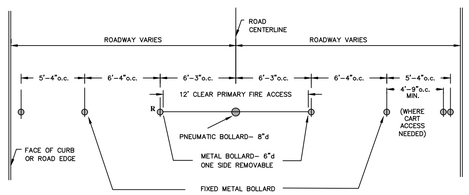

"R" DESIGNATES REMOVABLE BOLLARD

PRIMARY ACCESS FIRE ROUTE (ENTRY)

METAL BOLLARDS ADJACENT TO PNEUMATIC BOLLARDS

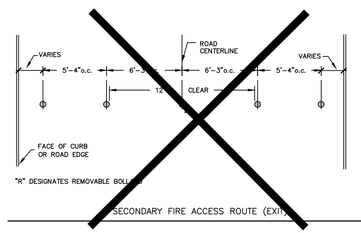

"R" DESIGNATES REMOVABLE BOLLARD

SECONDARY FIRE ACCESS ROUTE (EXIT)

PRIMARY FIRE ACCESS ROUTE SATISFIES IDEAL CRITERIA FOR FIRE TRUCK ACCESS TO BUILDINGS, AND SHOULD BE THE PREFERRED ROUTE TO A LOCATION.

SECONDARY ACCESS ROUTES HAVE LESS DESIRABLE CRITERIAL BUT STILL FUNCTION AS ACCESS TO AND FROM A LOCATION.

STANFORD UNIVERSITY FACILITY OPERATIONS				DWG.
Drawing Title: BOLLARD FIRE ACCESS SPACING – METAL REMOVEABLE				CS-310
Scale: NTS	Check: D. CANINO	Rev. By:	Rev. Date: 03/18/11	

NOTES:

1. SEE C10.0 AND C10.1 FOR LOCATION OF BOLLARDS AT THE ENTRANCE TO THE PRIMARY ACCESS FIRE ROUTE

6 — BOLLARD FIRE ACCESS SPACING

N.T.S.

Sheet Size: 24 x 36 | 0" | 1" | 2" | 03/13/2024 @ 3:45 PM

ZGF
ZIMMER GUNSUL FRASCA ARCHITECTS LLP

DENVER
LOS ANGELES
NEW YORK
PORTLAND
SEATTLE
WASHINGTON, DC
VANCOUVER, BC

1223 SW Washington Street
Suite 200
Portland, OR 97205
503.224.3860
www.zgf.com

ZGF Project Number P26717.wrss

Consultant

BKF
7901 Stoneridge Drive,
SUITE 360
PLEASANTON, CA 94588
(925) 396-7700
www.bkf.com

Full Design Team Roster on Sheet A0.02

Client and Project Information

Stanford MEDICINE

STANFORD UNIVERSITY
SCHOOL OF MEDICINE
1215 Welch Rd
Stanford, CA 94305

Original Issue
ASA SUBMITTAL 12.06.2024

Revisions
RESUBMITTAL 02.28.2025
RESUBMITTAL 04.22.2025

Key Plan and Orientation

Sheet Status
NOT FOR CONSTRUCTION

Sheet Title
CIVIL CONSTRUCTION DETAILS

Sheet Number
ASA-C9.03

Current Issue
ASA SUBMITTAL

Current Issue Date
12.06.2024

NOTE: THIS GRATE TO BE USED ONLY IN LANDSCAPED AREAS. IN PAVED AREARS USE THE RETICULINE FRAME AND GRATE SHOWN IN DETAIL CS-265

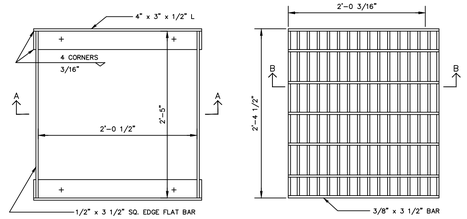

NOTES:
1. FRAME AND GRATE TO BE MADE OF CARBON STEEL.
2. ALL SURFACES TO BE GALVANIZED AFTER FABRICATION.
3. PLACE GRATE BARS PARALLEL TO ℄ OF OUTLET PIPE.
4. FASTEN GRATE TO FRAME AT CORNERS WITH REMOVABLE B-1 CLIPS OR APPROVED EQUAL.

STANFORD UNIVERSITY FACILITY OPERATIONS				DWG.
Drawing Title: FRAME AND GRATE FOR STORM DRAIN INLET AND CLEANOUT				CS-272
Scale: NTS	Check: STEVE BUI	Rev. By: OG	Rev. Date: 01/05/17	

1 — **DRAIN INLET FRAME + GRATE IN LANSCAPING**
N.T.S.

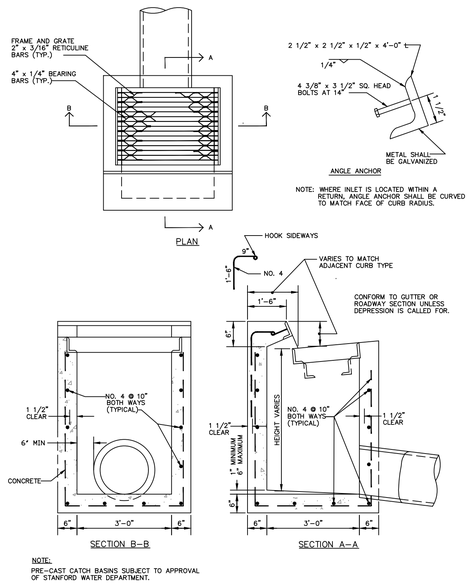

NOTE:
PRE-CAST CATCH BASINS SUBJECT TO APPROVAL OF STANFORD WATER DEPARTMENT.

STANFORD UNIVERSITY FACILITY OPERATIONS				DWG.
Drawing Title: STANFORD CURB INLET				CS-263
Scale: NTS	Check: KTS	Rev. By: OG	Rev. Date: 01/09	

2 — **CURB INLET**
N.T.S.

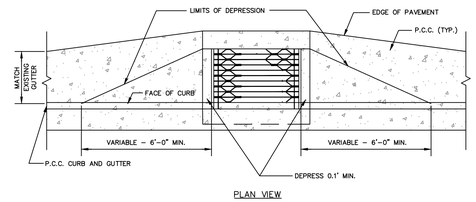

PLAN VIEW

STANFORD UNIVERSITY FACILITY OPERATIONS				DWG.
Drawing Title: P.C.C. GUTTER DEPRESSION				CS-264
Scale: NTS	Check: KTS	Rev. By: OG	Rev. Date: 01/09	

3 — **P.C.C GUTTER DEPRESSION**
N.T.S.

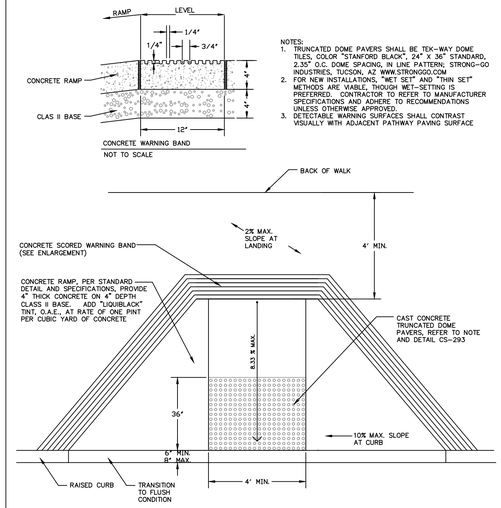

NOTES:
1. TRUNCATED DOME PAVERS SHALL BE TEK-WAY DOME TILES, COLOR "STANFORD BLACK", 24" X 36" STANDARD, 2.35" O.C. DOME SPACING, IN LINE PATTERN, STRONG-GO INDUSTRIES, TUCSON, AZ WWW.STRONGGO.COM
2. FOR NEW INSTALLATIONS, "WET SET" AND "THIN SET" METHODS ARE VIABLE, THOUGH WET-SETTING IS PREFERRED. CONTRACTOR TO REFER TO MANUFACTURER SPECIFICATIONS AND ADHERE TO RECOMMENDATIONS UNLESS OTHERWISE APPROVED.
3. DETECTABLE WARNING SURFACES SHALL CONTRAST VISUALLY WITH ADJACENT PATHWAY PAVING SURFACE

STANFORD UNIVERSITY FACILITY OPERATIONS				DWG.
Drawing Title: FLARED ADA RAMP WITH DETECTABLE WARNING PAVER				CS-292
Scale: NTS	Check: Drew B.	Rev. By: D.B.	Rev. Date: 02/23/15	

4 — **FLARED ADA RAMP WITH DETECTABLE WARNING PARVER**
N.T.S.

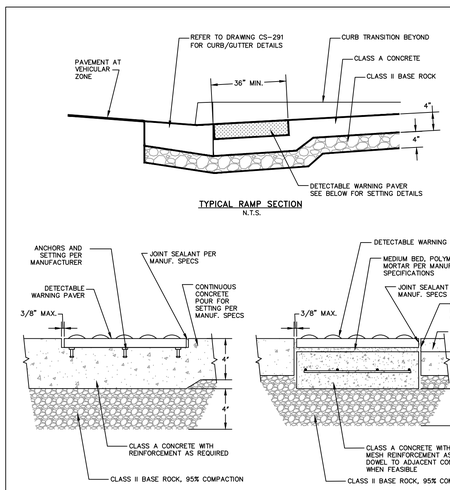

NOTES:
1. TRUNCATED DOME PAVERS SHALL BE TEK-WAY DOME TILES, COLOR "STANFORD BLACK", 24" X 36" STANDARD, 2.35" O.C. DOME SPACING, FROM STRONG-GO INDUSTRIES, 3296 E. HEMISPHERE LOOP, TUCSON, AZ 85706; WWW.STRONGGO.COM; (866) 439-3216
2. FOR NEW INSTALLATIONS, "WET SET" AND "THIN SET" METHODS ARE VIABLE, THOUGH WET-SETTING IS PREFERRED. CONTRACTOR TO REFER TO MANUFACTURER SPECIFICATIONS AND ADHERE TO RECOMMENDATIONS UNLESS OTHERWISE APPROVED.
3. FOR RETROFIT OF EXISTING RAMP, SAWCUT CONCRETE WITH NO OVERCUTS AND INSTALL PER DETAIL AND MANUFACTURER'S SPECIFICATIONS.
2. JOINT SEALANT COLOR SHALL MATCH ADJACENT CONCRETE JOINTS WHENEVER POSSIBLE

STANFORD UNIVERSITY FACILITY OPERATIONS				DWG.
Drawing Title: DETECTABLE WARNING PAVER INSTALLATION DETAIL				CS-293
Scale: NTS	Check: Drew B.	Rev. By: D.B.	Rev. Date: 02/23/15	

5 — **DETECTABLE WARNING PAVER INSTALLATION**
N.T.S.

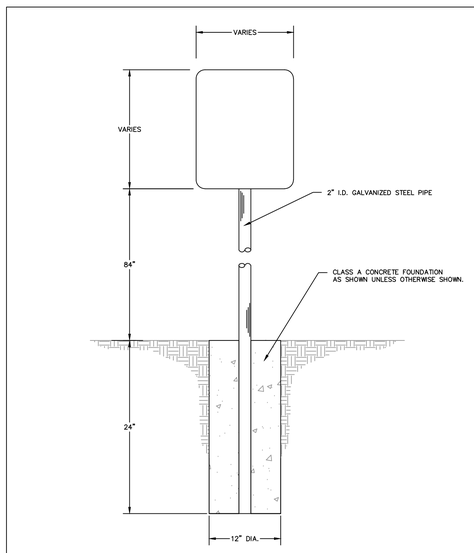

SIGN AND POST

NOTES:
1. SIGN SHALL BE 0.08" ALUMINUM, SMOOTH REFLECTIVE FINISH
2. POLES AND THE BACK OF SIGN SHALL BE PAINTED MATTE BLACK IF INSTALLED ON PALM DRIVE OR CAMPUS DRIVE
3. SIGN MOUNTING HARDWARE SHALL BE "STEAL-PROOF" ALUMINUM CLAMP ON U-BRACKET

STANFORD UNIVERSITY FACILITY OPERATIONS				DWG.
Drawing Title: SIGN AND POST				CS-294
Scale: NTS	Check: T. Leong	Rev. By: O.G.	Rev. Date: 02/24/15	

6 — **SIGN AND POST**
N.T.S.

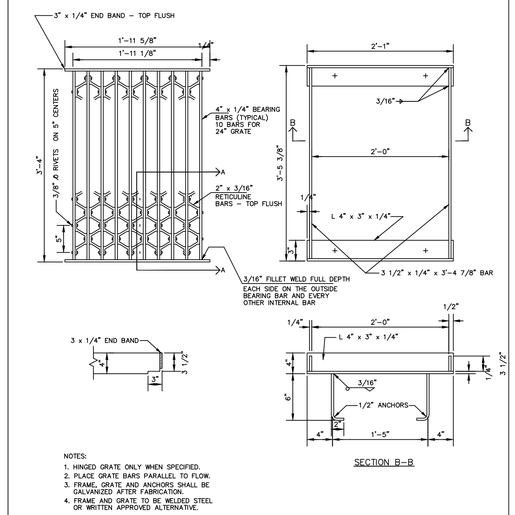

NOTES:
1. HINGED GRATE ONLY WHEN SPECIFIED.
2. PLACE GRATE BARS PARALLEL TO FLOW.
3. FRAME, GRATE AND ANCHORS SHALL BE GALVANIZED AFTER FABRICATION.
4. FRAME AND GRATE TO BE WELDED STEEL OR WRITTEN APPROVED ALTERNATIVE.

STANFORD UNIVERSITY FACILITY OPERATIONS				DWG.
Drawing Title: RETICULINE FRAME AND GRATE				CS-265
Scale: NTS	Check: KTS	Rev. By: OG	Rev. Date: 01/09	

7 — **RETICULINE FRAME AND GRATE**
N.T.S.

ZGF
ZIMMER GUNSUL FRASCA ARCHITECTS LLP

DENVER
LOS ANGELES
NEW YORK
PORTLAND
SEATTLE
WASHINGTON, DC
VANCOUVER, BC

1223 SW Washington Street
Suite 200
Portland, OR 97205
503.224.3860
www.zgf.com

ZGF Project Number P26717.wrss

Consultant

BKF
7901 Stoneridge Drive, SUITE 360
PLEASANTON, CA 94588
(925) 396-7700
www.bkf.com

Full Design Team Roster on Sheet A0.02

Client and Project Information

Stanford MEDICINE

STANFORD UNIVERSITY SCHOOL OF MEDICINE
1215 Welch Rd
Stanford, CA 94305

Original Issue
ASA SUBMITTAL 12.06.2024

Revisions
RESUBMITTAL 02.28.2025
RESUBMITTAL 04.22.2025

Key Plan and Orientation

Sheet Status
NOT FOR CONSTRUCTION

Sheet Title
CIVIL CONSTRUCTION DETAILS

Sheet Number
ASA-C9.04

Current Issue
ASA SUBMITTAL

Current Issue Date
12.06.2024

Sheet Size: 24 x 36 | 0" | 1" | 2" | 03/13/2024 @ 3:45 PM

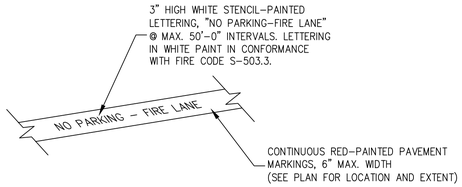

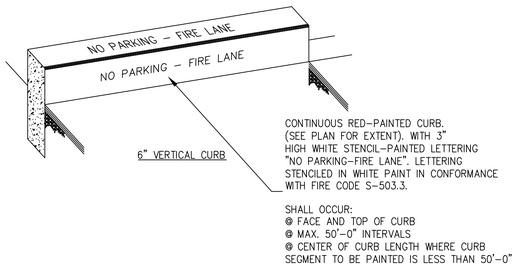

NOTES:
1. TEMPERATURE DURING APPLICATION SHALL NOT BE LESS THAN 60° F.
2. CURB SHALL BE DRY TWO DAYS PRIOR TO APPLICATION.
3. ALL RED CURBING REMOVED, SHALL BE REPLACE WITH SAME.
4. RED CURB PAINT SHALL BE J.E. BAUER ZONE LAC CURB PAINT NO. 2052A9, RED LATEX BASE OR EQUAL.

1 — **FIRE LANE RED CURB STRIPING**
N.T.S.

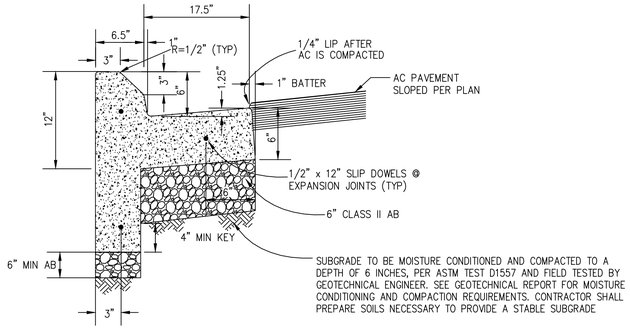

NOTES:
1. CONCRETE COMPRESSIVE STRENGTH SHALL BE 3,500 PSI
2. PROVIDE MEDIUM–BROOM FINISH

2 — **CHAMFERED CURB AND GUTTER**
N.T.S.

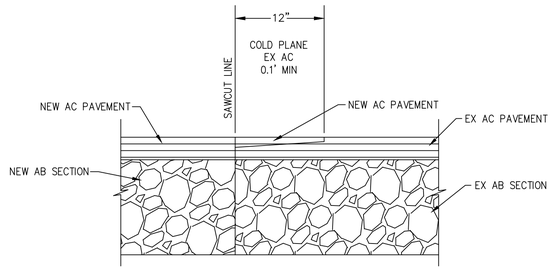

3 — **PAVEMENT CONFORM**
N.T.S.

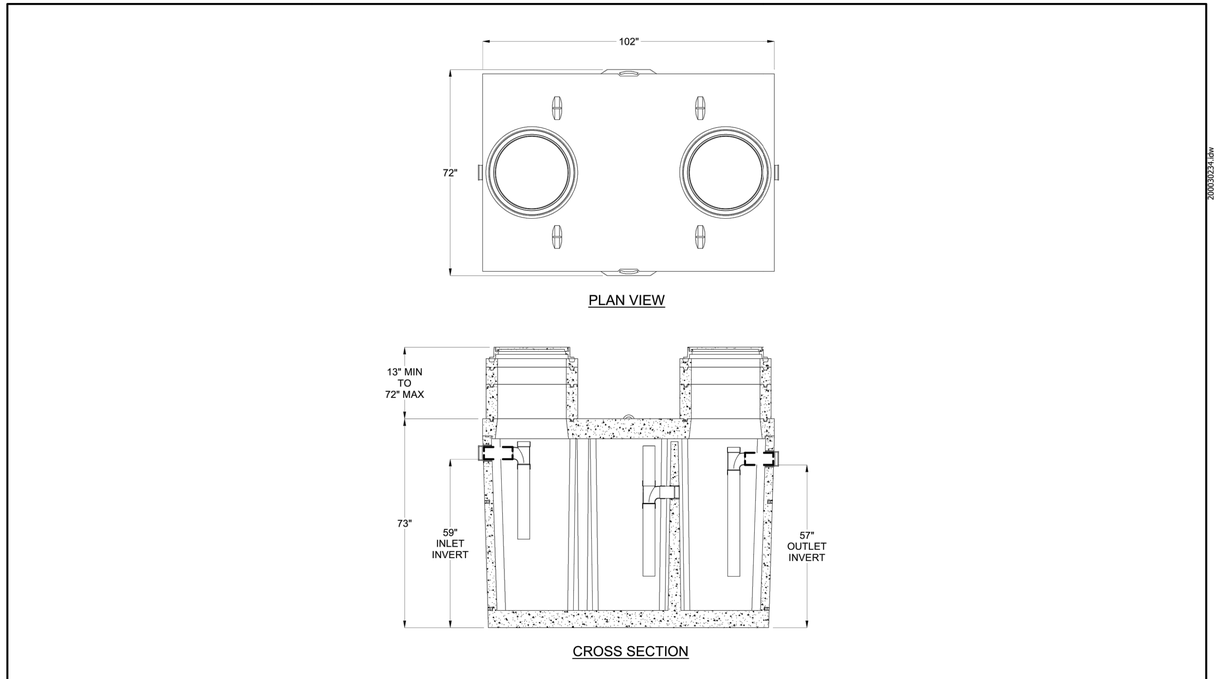

BURY DEPTH:	1.1' - 6.0' to Top			DESCRIPTION: Tank JP 1200 Gallon 4 Inch Layout Gravity Grease Interceptor 24"E, 24"E Single Baffle LAYOUT DRAWING	REV: D-1
WATER LEVEL: Below Structure	WEIGHT: 15757.04 Lbs				
DESIGN SPEC: ASTM C890,ACI 318	LOADING SPEC: A-16 (AASHTO HS20-44)	PART NUMBER: 200030234	DRAWN BY: E. Fine		SHEET: 2 OF 2
REINFORCEMENT TYPE:	LIFTING TYPE:	CREATED: 1/31/2019	MODIFIED: 6/29/2022		

JENSEN PRECAST EST. 1968
WWW.JENSENPRECAST.COM

©2018 Jensen Precast- All rights reserved. All materials appearing as Jensen Precast documents and the like are proprietary work product and are protected under U.S. copyright and other laws. Unless in conjunction with business conducted with Jensen Precast, any use of Jensen Precast work product without express, written consent is prohibited, and recipient is prohibited from distributing any and all work product to non-approved third parties under penalty of civil action.

4 — **1,200 GALLON GREASE INTERCEPTOR**
N.T.S.

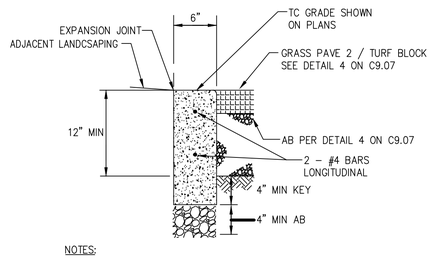

NOTES:
1. CONCRETE COMPRESSIVE STRENGTH SHALL BE 3,500 PSI
2. PROVIDE MEDIUM–BROOM FINISH FOR CONCRETE

5 — **FLUSH CONCRETE CURB**
N.T.S.

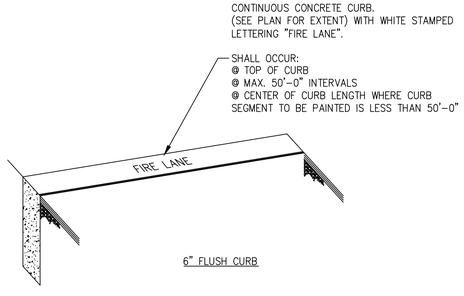

6 — **FIRE LANE FLUSH CURB STRIPING**
N.T.S.

ZGF
ZIMMER GUNSUL FRASCA ARCHITECTS LLP

DENVER
LOS ANGELES
NEW YORK
PORTLAND
SEATTLE
WASHINGTON, DC
VANCOUVER, BC

1223 SW Washington Street
Suite 200
Portland, OR 97205
503.224.3860
www.zgf.com

ZGF Project Number P26717.wrss

Consultant

BKF
7901 Stoneridge Drive, SUITE 360
PLEASANTON, CA 94588
(925) 396-7700
www.bkf.com

Full Design Team Roster on Sheet A0.02

Client and Project Information

Stanford MEDICINE

STANFORD UNIVERSITY
SCHOOL OF MEDICINE
1215 Welch Rd
Stanford, CA 94305

Original Issue
ASA SUBMITTAL 12.06.2024

Revisions
RESUBMITTAL 02.28.2025
RESUBMITTAL 04.22.2025

Key Plan and Orientation

Sheet Status
NOT FOR CONSTRUCTION

Sheet Title
CIVIL CONSTRUCTION DETAILS

Sheet Number
ASA-C9.05

Current Issue
ASA SUBMITTAL

Current Issue Date
12.06.2024

Sheet Size: 24 x 36 | 0" | 1" | 2" | 03/13/2024 @ 3:45 PM

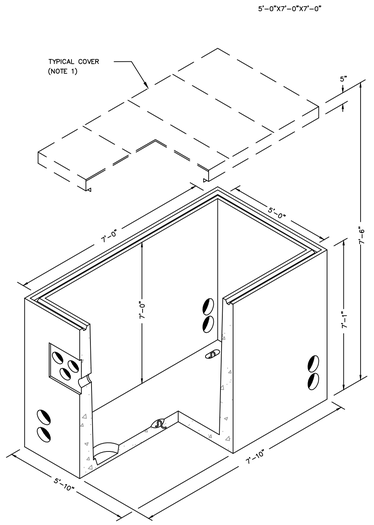

VAULT INCLUDES:

- 7/8" DIA. PULL IRONS (5 EA.)
- 14" DIA. 4" SUMP (1 EA.)
- 1" DIA. GROUND ROD KNOCK-OUTS (2 EA.)

NOTES:

1. STANFORD HIVOLT TO SPECIFY COVER STYLE. (SEE ES-17).
2. INSIDE VAULT DEPTH (FINAL DEPTH) TO BE ADJUSTED USING EXTENSIONS. (SEE ES-16).

SHEET 1 OF 3

STANFORD UNIVERSITY FACILITY OPERATIONS				DWG.
Drawing Title: MH TYPE "A"				ES-15
Scale: NTS	Check: D. LO	Rev. By: JEM	Rev. Date: 07/17/00	

CATALOG * NUMBER	W	L	D	LBS	OUTSIDE DIM.
35-R06-EXT	3'-0"	5'-0"	6"	520	3'-10"x5'-10"
35-R12-EXT	3'-0"	5'-0"	12"	970	3'-10"x5'-10"
35-R24-EXT	3'-0"	5'-0"	24"	1940	3'-10"x5'-10"

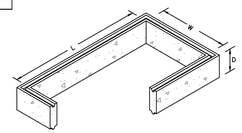

CATALOG * NUMBER	W	L	D1	D2	OUTSIDE DIM.
35-SWL-EXT	3'-0"	5'-0"			3'-10"x5'-10"

CUSTOMER TO SPECIFY HEIGHT OF D1 & D2

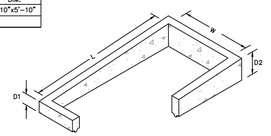

CATALOG * NUMBER	W	L	D1	D2	OUTSIDE DIM.
35-SSW-EXT	3'-0"	5'-0"			3'-10"x5'-10"

CUSTOMER TO SPECIFY HEIGHT OF D1 & D2

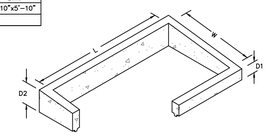

NOTE:

* CATALOG NUMBER'S BY "UTILITY VAULT CO." (FOR REFERENCE ONLY)

SHEET 1 OF 2

STANFORD UNIVERSITY FACILITY OPERATIONS				DWG.
Drawing Title: FOR TYPE A, B, & C				ES-16
Scale: NTS	Check: D. LO	Rev. By: JEM	Rev. Date: 06/26/00	

ASSEMBLY INCLUDES:

- RECESSED I.D. PLATES (4 EA.)
- 7/8" LIFTING INSERTS (4 EA.)
- GALVANIZED STEEL SHELL
- 5" X 5" GALVANIZED STEEL FRAME
- 3/4" DIA. COIL ADJUSTMENT BOLTS
- USE 2 COVERS IF REQUESTED

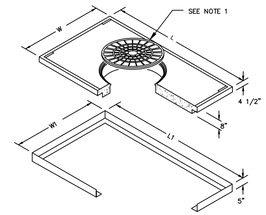

FULL TRAFFIC COVER – TYPE "Y"

TYPE "Y" (FOR MH TYPE B & C)

ASSEMBLY INCLUDES:

- QUICK RELEASE, SLIP RESISTANT ALUMINUM PLATE.

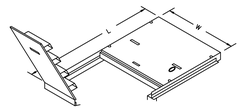

FULL TRAFFIC COVER – TYPE "Z"

TYPE "Z" (FOR MH TYPE A, B, & C)

NOTES:

1. SEE ES-21 FOR COVER DETAIL (36" MIN. OPENING).
2. CODE NUMBERS ARE BY "PG&E". (FOR REFERENCE ONLY)

STANFORD UNIVERSITY FACILITY OPERATIONS				DWG.
Drawing Title: TRAFFIC COVERS – TYPES "Y" & "Z"				ES-17
Scale: NTS	Check: D. LO	Rev. By: JEM	Rev. Date: 06/26/00	

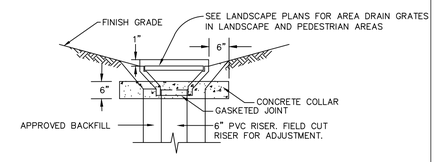

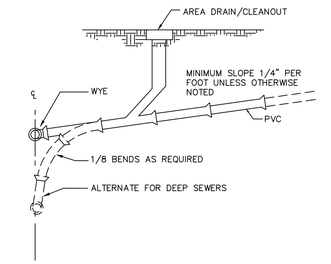

1 5'X7' ELECTRICAL HANDHOLE

N.T.S.

2 ELECTRICAL VAULT GRADE RING RISERS

N.T.S.

3 5'X7' ELECTRICAL VAULT COVER

N.T.S.

4 NDS #6 AREA DRAIN & WYE CONNECTION

N.T.S.

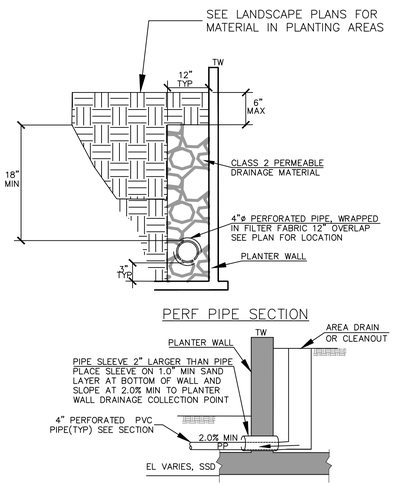

5 PLANTER WALL DRAINAGE

N.T.S.

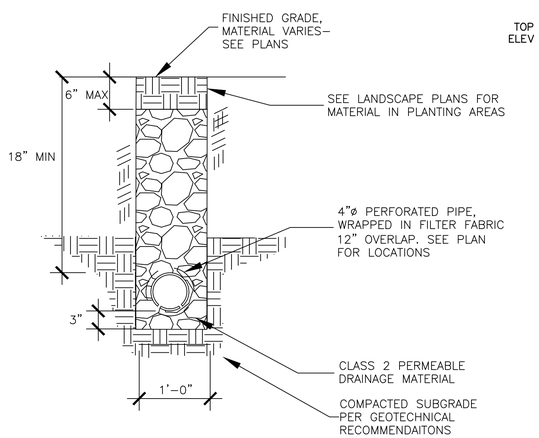

6 PERFORATED PIPE & TRENCH BACKFILL

N.T.S.

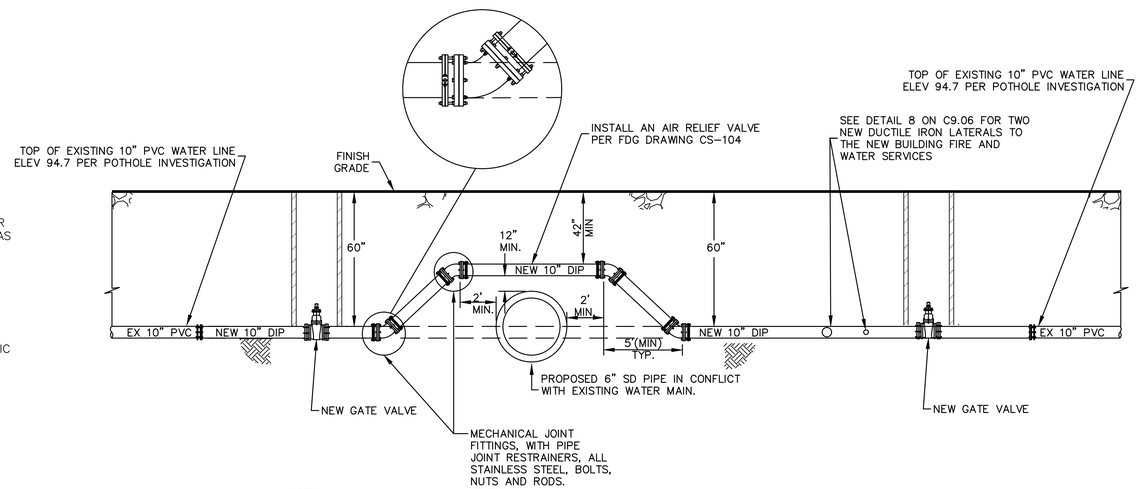

NOTES:

1. ALL BENDS SHALL BE 45° OR 22-1/2° FITTINGS, AS REQUIRED FOR PROPER HORIZONTAL SEPARATION.
2. PIPE JOINT RESTRAINERS SHALL BE EBAA-IRON SERIES 2000PV FOR PVC TO DUCTILE IRON FITTINGS AND EBAA-IRON SERIES 1100 FOR DUCTILE IRON TO DUCTILE IRON FITTINGS.
3. SEE DETAIL 7 ON C9.02 FOR TRENCH AND BACKFILL REQUIREMENTS
4. INSTALL THRUST BLOCKS AS REQUIRED PER STANFORD FDGS.

7 SOUTHWEST WATER MAIN VERTICAL OFFSET

N.T.S.

ZGF
ZIMMER GUNSUL FRASCA ARCHITECTS LLP

DENVER
LOS ANGELES
NEW YORK
PORTLAND
SEATTLE
WASHINGTON, DC
VANCOUVER, BC

1223 SW Washington Street
Suite 200
Portland, OR 97205
503.224.3860
www.zgf.com

ZGF Project Number P26717.wrss

Consultant

BKF
7901 Stoneridge Drive, SUITE 360
PLEASANTON, CA 94588
(925) 396-7700
www.bkf.com

Full Design Team Roster on Sheet A0.02

Client and Project Information

Stanford MEDICINE

STANFORD UNIVERSITY
SCHOOL OF MEDICINE
1215 Welch Rd
Stanford, CA 94305

Original Issue
ASA SUBMITTAL 12.06.2024

Revisions
RESUBMITTAL 02.28.2025
RESUBMITTAL 04.22.2025

Key Plan and Orientation

Sheet Status
NOT FOR CONSTRUCTION

Sheet Title
CIVIL CONSTRUCTION DETAILS

Sheet Number
ASA-C9.06

Current Issue
ASA SUBMITTAL

Current Issue Date
12.06.2024

03/13/2026 @ 3:45 PM
2" 1" 0"
Sheet Size: 24 x 36

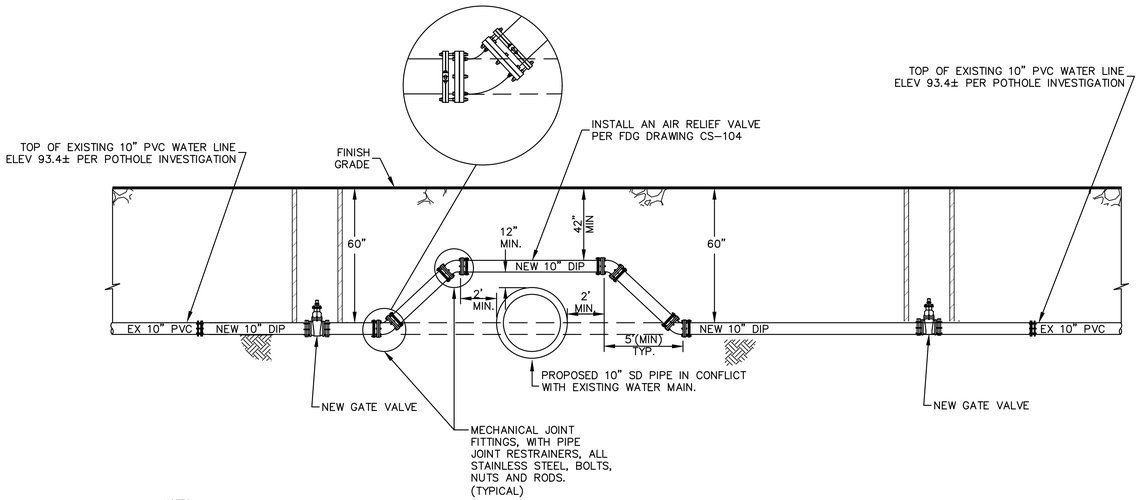

NOTES:

1. ALL BENDS SHALL BE 45° OR 22-1/2° FITTINGS, AS REQUIRED FOR PROPER HORIZONTAL SEPARATION.
2. PIPE JOINT RESTRAINERS SHALL BE EBAA-IRON SERIES 2000PV FOR PVC TO DUCTILE IRON FITTINGS AND EBAA-IRON SERIES 1100 FOR DUCTILE IRON TO DUCTILE IRON FITTINGS.
3. SEE DETAIL 7 ON C9.02 FOR TRENCH AND BACKFILL REQUIREMENTS
4. INSTALL THRUST BLOCKS AS REQUIRED PER STANFORD FDGS.

1 — **NORTHWEST WATER MAIN VERTICAL OFFSET**

N.T.S.

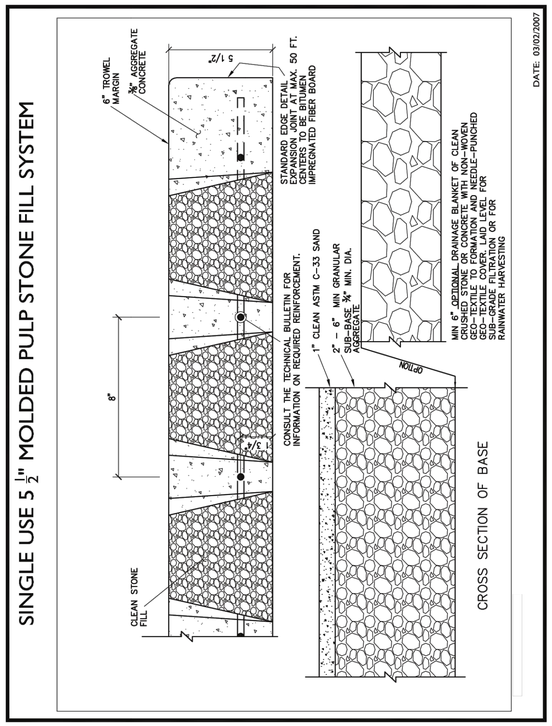

4 — **STONE FILLED "GRASSCRETE" AT DISCOVERY WALK**

N.T.S.

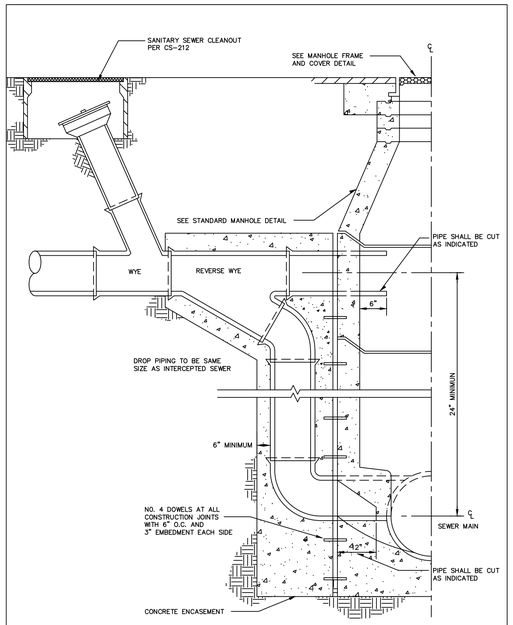

STANFORD UNIVERSITY FACILITY OPERATIONS			DWG.
Drawing Title: DROP MANHOLE CONNECTION			CS-202
Scale: NTS	Check:	Rev. By: OG	Rev. Date: 02/11/14

2 — **SANITARY SEWER DROP MANHOLE**

N.T.S.

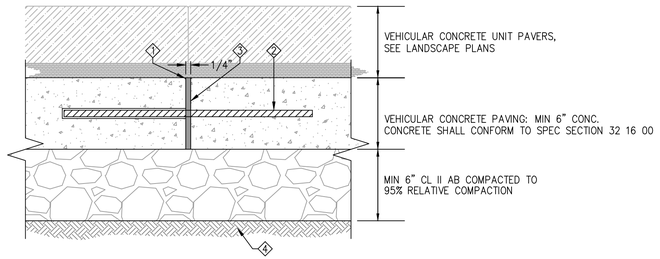

LEGEND:

1. 1/8" RADIUS, TYPICAL ALL EDGES
2. 1/2" X 18" SMOOTH DOWEL WITH PAPER SLEEVES AND CORK AT ONE END @ 24" O.C. FOR PEDESTRIAN.
3. EXPANSION MATERIAL AND JOINT SEALANT, MATERIAL AND SPACING PER SPEC SECTION 32 16 00.
4. SUBGRADE TO BE MOISTURE CONDITIONED AND COMPACTED TO A DEPTH OF 6 INCHES, PER ASTM TEST D1557 AND FIELD TESTED BY GEOTECHNICAL ENGINEER. SEE GEOTECHNICAL REPORT FOR MOISTURE CONDITIONING AND COMPACTION REQUIREMENTS.

NOTES:

1. SEE LANDSCAPE PLANS FOR PAVER THICKNESS, FINISH AND, COLOR
2. CONSTRUCTION AND EXPANSION JOINTS SHALL BE DOWELED PER GEOTECHNICAL RECOMMENDATIONS.
3. COMPRESSIVE STRENGTH 3,500 MIN. PER GEOTECHNICAL RECOMMENDATIONS.

5 — **DISCOVERY WALK VEHICULAR CONCRETE UNIT PAVERS**

N.T.S.

3 — **TEMPORARY HAMMERHEAD ASPHALT PAVING**

N.T.S.

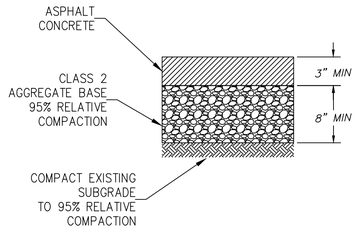

ZGF
ZIMMER GUNSUL FRASCA ARCHITECTS LLP

DENVER
LOS ANGELES
NEW YORK
PORTLAND
SEATTLE
WASHINGTON, DC
VANCOUVER, BC

1223 SW Washington Street
Suite 200
Portland, OR 97205
503.224.3860
www.zgf.com

ZGF Project Number P26717.wrss

Consultant

BKF
7901 Stoneridge Drive, SUITE 360
PLEASANTON, CA 94588
(925) 396-7700
www.bkf.com

Full Design Team Roster on Sheet A0.02

Client and Project Information

Stanford MEDICINE

STANFORD UNIVERSITY SCHOOL OF MEDICINE
1215 Welch Rd
Stanford, CA 94305

Original Issue
ASA SUBMITTAL 12.06.2024

Revisions
RESUBMITTAL 02.28.2025
RESUBMITTAL 04.22.2025

Key Plan and Orientation

Sheet Status
NOT FOR CONSTRUCTION

Sheet Title
CIVIL CONSTRUCTION DETAILS

Sheet Number
ASA-C9.07

Current Issue
ASA SUBMITTAL

Current Issue Date
12.06.2024

Sheet Size: 24 x 36 | 0" | 1" | 2" | 03/13/2024 @ 3:45 PM

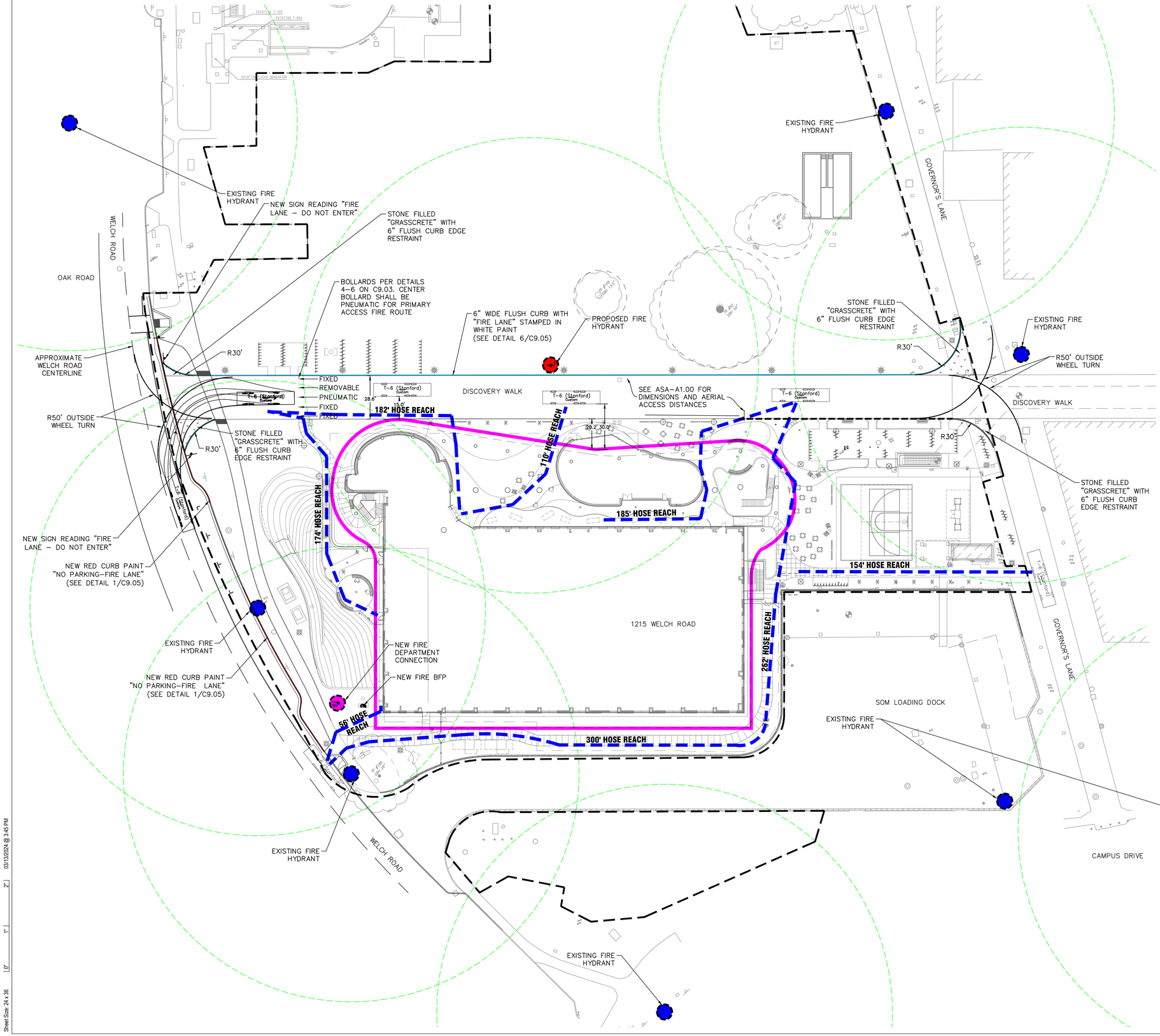

LEGEND

- EXISTING FIRE HYDRANT
- PROPOSED FIRE HYDRANT (3/C9.01) (4/C9.01)
- PROPOSED FIRE DEPARTMENT CONNECTION (FDC) (2/C9.01)
- 150' RADIUS FROM FIRE HYDRANT
- STONE FILLED "GRASSCRETE" WITH 6" FLUSH CURB EDGE RESTRAINT (5/C9.00) (4/C9.01)
- 6" RED–PAINTED CURB "NO PARKING–FIRE LANE" (1/C9.05)
- 6" CONCRETE FLUSH CURB "FIRE LANE" STAMPED IN WHITE (6/C9.05)
- BUILDING ROOF OUTLINE

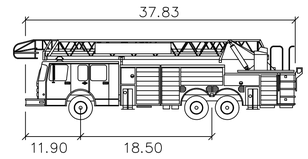

Fire Truck T6 feet

Width	: 8.50
Track	: 8.00
Lock to Lock Time	: 6.0
Steering Angle	: 30.5

NOT TO SCALE

GENERAL NOTES:

1. PROPOSED ACCESS ROADS TO BE MADE OF AN ALL WEATHER MATERIAL COMPLIANT WITH 75,000 LB LOAD CAPACITY.
2. FIRE WATER BFP, FDC, AND HYDRANTS TO HAVE A MINIMUM 3 FOOT CLEARANCE FROM ALL DEVICES AND OTHER SITE OBSTRUCTIONS. ALL FIRE WATER DEVICES MUST BE CLEARLY VISIBLE.
3. FINISHED SURFACE ON DISCOVERY WALK FIRE LANE SHALL BE CONCRETE UNIT PAVERS. UNIT PAVER SHALL BE AN ALL WEATHER MATERIAL COMPLIANT WITH 75,000 LB LOAD CAPACITY. SEE LANDSCAPE PLANS FOR METAL EDGE RESTRAINT, PAVER, AND MORTAR BED DETAILING. SEE DETAIL 5 ON C9.07 FOR CONCRETE SUB–SLAB DETAILING.

ZGF
ZIMMER GUNSUL FRASCA ARCHITECTS LLP

DENVER
LOS ANGELES
NEW YORK
PORTLAND
SEATTLE
WASHINGTON, DC
VANCOUVER, BC

1223 SW Washington Street
Suite 200
Portland, OR 97205
503.224.3860
www.zgf.com

ZGF Project Number P26717.wrss

Consultant

BKF
7901 Stoneridge Drive, SUITE 360
PLEASANTON, CA 94588
(925) 396–7700
www.bkf.com

Full Design Team Roster on Sheet A0.02

Client and Project Information

Stanford MEDICINE

STANFORD UNIVERSITY SCHOOL OF MEDICINE
1215 Welch Rd
Stanford, CA 94305

Original Issue
ASA SUBMITTAL 12.06.2024

Revisions
RESUBMITTAL 02.28.2025
RESUBMITTAL 04.22.2025

Key Plan and Orientation

Sheet Status
NOT FOR CONSTRUCTION

Sheet Title
FIRE ACCESS PLAN - FULL BUILDOUT

Sheet Number
ASA-C10.00

Current Issue
ASA SUBMITTAL

Current Issue Date
12.06.2024

Sheet Size 24 x 36 | 0" | 1" | 2" | 03/13/2024 @ 3:45 PM

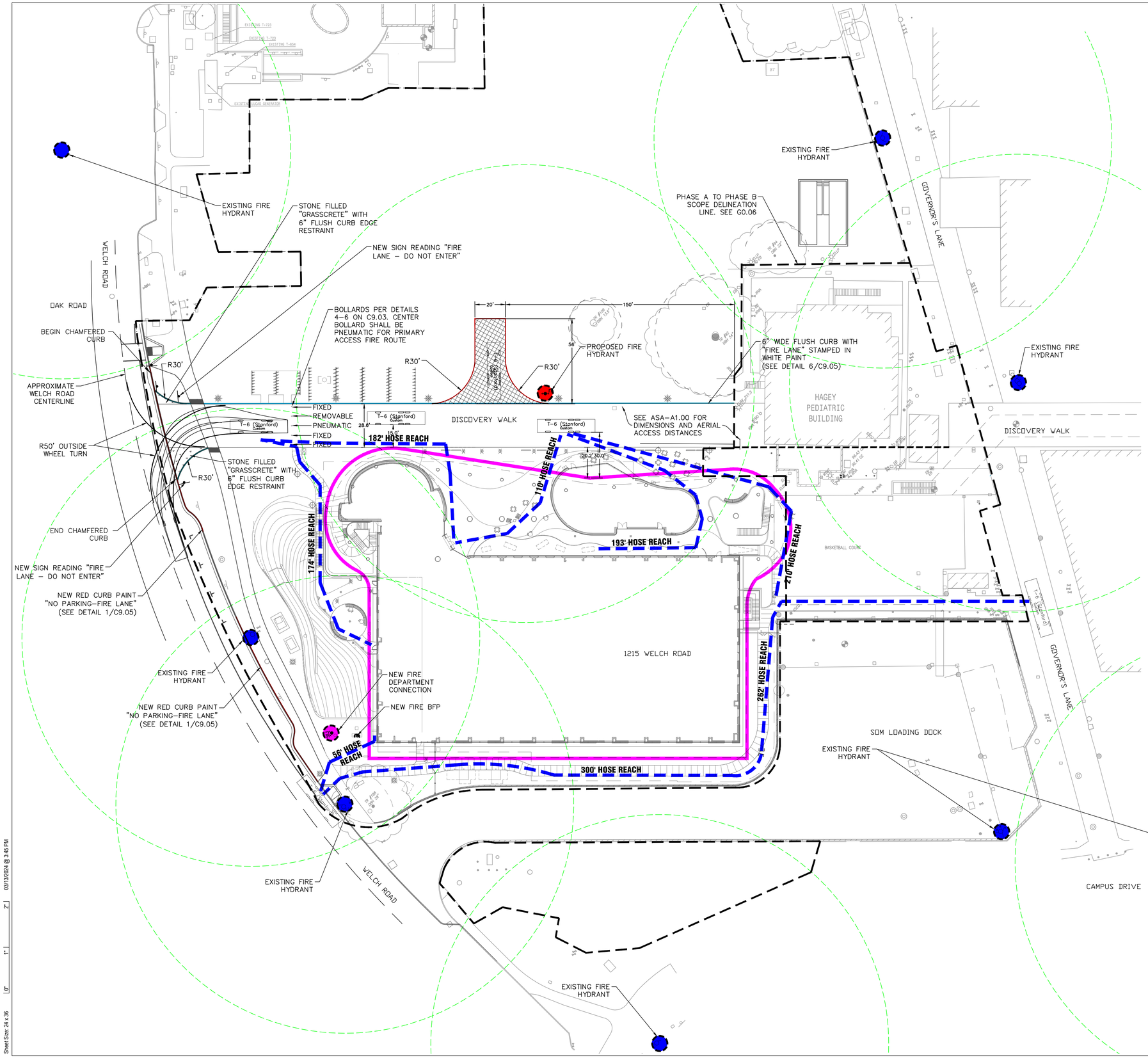

LEGEND

- EXISTING FIRE HYDRANT
- PROPOSED FIRE HYDRANT (3/C9.01) (4/C9.01)
- PROPOSED FIRE DEPARTMENT CONNECTION (FDC) (2/C9.01)
- 150' RADIUS FROM FIRE HYDRANT
- TEMPORARY VEHICULAR ASPHALT FOR FIRE TRUCK TURNAROUND (3/C9.01)
- STONE FILLED "GRASSCRETE" WITH 6" FLUSH CURB EDGE RESTRAINT (5/C9.05) (4/C9.01)
- 6" RED–PAINTED CURB "NO PARKING–FIRE LANE" (1/C9.05)
- 6" CONCRETE FLUSH CURB "FIRE LANE" STAMPED IN WHITE (6/C9.05)
- BUILDING ROOF OUTLINE

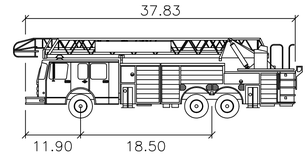

Fire Truck T6 feet

Width	: 8.50
Track	: 8.00
Lock to Lock Time	: 6.0
Steering Angle	: 30.5

NOT TO SCALE

GENERAL NOTES:

1. PROPOSED ACCESS ROADS TO BE MADE OF AN ALL WEATHER MATERIAL COMPLIANT WITH 75,000 LB LOAD CAPACITY.
2. FIRE WATER BFP, FDC, AND HYDRANTS TO HAVE A MINIMUM 3 FOOT CLEARANCE FROM ALL DEVICES AND OTHER SITE OBSTRUCTIONS. ALL FIRE WATER DEVICES MUST BE CLEARLY VISIBLE.
3. FINISHED SURFACE ON DISCOVERY WALK FIRE LANE SHALL BE CONCRETE UNIT PAVERS. UNIT PAVER SHALL BE AN ALL WEATHER MATERIAL COMPLIANT WITH 75,000 LB LOAD CAPACITY. SEE LANDSCAPE PLANS FOR METAL EDGE RESTRAINT, PAVER, AND MORTAR BED DETAILING. SEE DETAIL 5 ON C9.07 FOR CONCRETE SUB–SLAB DETAILING.

ZGF
ZIMMER GUNSUL FRASCA ARCHITECTS LLP

DENVER
LOS ANGELES
NEW YORK
PORTLAND
SEATTLE
WASHINGTON, DC
VANCOUVER, BC

1223 SW Washington Street
Suite 200
Portland, OR 97205
503.224.3860
www.zgf.com

ZGF Project Number P26717.wrss

Consultant

BKF
7901 Stoneridge Drive, SUITE 360
PLEASANTON, CA 94588
(925) 396-7700
www.bkf.com

Full Design Team Roster on Sheet A0.02

Client and Project Information

Stanford MEDICINE

STANFORD UNIVERSITY SCHOOL OF MEDICINE
1215 Welch Rd
Stanford, CA 94305

Original Issue
ASA SUBMITTAL 12.06.2024

Revisions
RESUBMITTAL 02.28.2025
RESUBMITTAL 04.22.2025

Key Plan and Orientation

Sheet Status
NOT FOR CONSTRUCTION

Sheet Title
FIRE ACCESS PLAN - INTERIM CONDITION

Sheet Number
ASA-C10.01

Current Issue
ASA SUBMITTAL

Current Issue Date
12.06.2024

Sheet Size 24 x 36 | 0" | 1" | 2" | 03/13/2024 @ 3:45 PM

ABBREVIATIONS

A.D.	AREA DRAIN
A.S.F.	ABOVE SUB FLOOR
ADJ.	ADJUSTABLE
A.F.F.	ABOVE FINISH FLOOR
ALUM.	ALUMINUM
APPROX.	APPROXIMATELY
ATTN.	ATTENTION
BATHRM.	BATHROOM
B.C.	BOTTOM OF CURB
BLDG.	BUILDING
BLKG.	BLOCKING
BD.	BOARD
BOT	BOTTOM
B.O.S.	BOTTOM OF STAIR
B.W.	BOTTOM OF WALL
BTWN.	BETWEEN
BW	BACK OF WALK
C.B.	CATCH BASIN
CAB.	CABINETRY
C.I.P.	CAST IN PLACE
C.J.	CONTROL JOINT
CL	CENTER LINE
CLG.	CEILING
CLR.	CLEAR
CMU	CONCRETE MASONRY UNIT
COL.	COLUMN
CONC.	CONCRETE
CONT.	CONTINUOUS
C.O.S.	CENTER OF STEEL
CP	CENTER POINT
C.T.	CERAMIC TILE
CTR.	CENTER
DEMO	DEMOLITION
DIA.	DIAMETER
DIM.	DIMENSION
DN	DOWN
DTL.	DETAIL
DWG.	DRAWING
(E)	EXISTING
EA.	EACH
E.J.	EXPANSION JOINT
ELEC.	ELECTRICAL
ELEV.	ELEVATION
ENGL.	ENLARGEMENT
ENGR.	ENGINEER
EQ.	EQUAL
E.W.	EACH WAY
EXP.	EXPANSION
EXT.	EXTERIOR
EXT'G	EXISTING
F.O.F.	FACE OF FINISH
F.B.O.	FURNISHED BY OWNER
FF	FINISHED FLOOR
F.G.	FINISH GRADE
FIN.	FINISH
FL	FLOW LINE
FLR.	FLOOR
F.O.B.	FACE OF BUILDING
F.O.C.	FACE OF CONCRETE
F.P.	FINISH PAVEMENT
F.S.	FINISH SURFACE
FT.	FOOT OR FEET
FTG.	FOOTING
GA.	GAUGE
GALV.	GALVANIZED
G.B.	GRADE BREAK
GL.	GLASS
GLU-LAM.	GLUE LAMINATED
GWB	GYPSUM WALL BOARD
H.B.	HOSE BIB
HDWR	HARDWARE
H.M.	HOLLOW METAL
HP	HIGH POINT
HORIZ.	HORIZONTAL
HT.	HEIGHT
I.D.	INSIDE DIMENSION
IN.	INCH OR INCHES
INV.	INVERT
J.B.	JUNCTION BOX
JT.	JOINT
LAM.	LAMINATED
LAV.	LAVATORY
LBS.	POUNDS
LP	LOW POINT
L.O.W.	LIMIT OF WORK
MAX.	MAXIMUM
MECH.	MECHANICAL
MFR.	MANUFACTURER
MIN.	MINIMUM
MTL.	METAL
(N)	NEW
NA	NOT APPLICABLE
N.I.C.	NOT IN CONTRACT
NO.	NUMBER
NOM.	NOMINAL
N.T.S.	NOT TO SCALE
O.C.	ON CENTER
O.D.	OUTSIDE DIMENSION OR DIAMETER
O.H.	OVERHEAD
OPNG.	OPENING
OPP.	OPPOSITE
PED.	PEDESTRIAN
P.D.	PLANTER DRAIN
P.L.	PROPERTY LINE
P.LAM	PLASTIC LAMINATE
PLAS.	PLASTER
PLYWD.	PLYWOOD
P.P.	PERFORATED PIPE
PREFAB	PREFABRICATED
PTD.	PAINTED
QTY.	QUANTITY
RAD.	RADIUS
REF.	REFERENCE
REINF.	REINFORCING
REQ'D.	REQUIRED
RET.	RETURN
REV.	REVISION
RIM	RIM ELEVATION
R.L.	RIDGE LINE
RM	ROOM
R.O.W.	RIGHT OF WAY
S.A.D.	SEE ARCHITECTURAL DRAWINGS
S.S.D.	SEE STRUCTURAL DRAWINGS
S.C.D.	SEE CIVIL DRAWINGS
SCHED.S.D.	SCHEDULE
S.D.L.	SUBDRAINAGE LINE
S.F.	SQUARE FEET
S.G.B.	SOFT GRADE BREAK
SHT.	SHEET
SIM.	SIMILAR
S.J.	SCORE JOINT
SPEC.	SPECIFICATION
SQ.	SQUARE
S.S.	STAINLESS STEEL
STD.	STANDARD
STL.	STEEL
STRUCT.	STRUCTURAL
SUSP.	SUSPENDED
T.C.	TOP OF CURB
TH.	THRESHOLD
THK.	THICK
T.O.	TOP OF
T.O.H.	TOP OF HEADER
T.O.S.	TOP OF STAIR
TW	TOP OF WALL
TYP.	TYPICAL
U.O.N.	UNLESS OTHERWISE NOTED
VAR.	VARIES
VCT	VINYL COMPOSITE TILE
VERT.	VERTICAL
V.I.F.	VERIFY IN FIELD
W.C.	WATER CLOSET
WD	WOOD
W/	WITH
W/O	WITHOUT
W.P.M.	WATERPROOF MEMBRANE
W.W.M.	WELDED WIRE MESH

ASA LANDSCAPE NARRATIVE:

Landscape Site Program and Design

The School of Medicine's (SoM) aspiration for the site design and landscape embraces three principles: Continue, Preserve and Accentuate. The approach to the site design is further informed by the relationships to neighboring buildings and entries, the extension of Discovery Walk from the East through to Welch Road to the West, and the preservation of existing tree resources where feasible. The new building and its site should not only fit seamlessly into the surrounding landscape, but they will also provide diverse and comfortable outdoor social spaces for new programming related to both the new School of Medicine research building and the courtyards and plazas formed to the north, east and west, all of which are meant to support either building activity or SoM campus-wide activities and events.

The Site Design includes the following landscape areas and elements as labeled in the plan:

The expansion of Discovery Walk from the intersection of Governor's Lane to the West, extending the paver type and pattern to the curb line at Welch Road. This extension will be considered fire access from Welch Road on the west and from Governors Lane on the east. The existing Coast Live Oak, number 92, see Arborist Report dated August 19th, 2024, is to be preserved to create a distinct experience along the north edge of Discovery Walk. That experience will be defined by this mature tree forming part of a future oak grove to frame the north edge of discovery walk as one passes by the east plaza situated to the south of Discovery Walk. A series of large, fixed furnishings along the south edge of Discovery Walk will provide opportunities for social interactions at the building entry and a new café on the south side of the walk. At the west end of Discovery Walk there will be removable bollard control to allow for fire and emergency access vehicles only.

The improvement of the East Plaza on the east side of the new building is framed by Discovery Walk to the north, Governors Lane to the east and the existing loading dock wall. There are existing structures in this area that are to be protected in place including the service elevator and exterior stairway from the loading/service area below. The program of this newly designed space includes SoM-wide events, café dining, informal meetings, reading, welcome and networking events, fitness and wellness such as pickup basketball, fitness classes and outdoor workout equipment. The new elements in this plaza space include unit pavers, moveable and fixed seating, concrete paving, a half-court basketball court (on existing pavement), outdoor gym/workout equipment, and site lighting. Along Discovery Walk there will be planting and group seating areas. Along the south edge of the plaza area there is vine planting at the existing screen and loading dock wall.

The Entry Plaza is characterized as a more building-oriented communal space beside and under the overhanging roof of the building. The program here is meant to accommodate informal, ad-hoc outdoor meeting, building events and gatherings. In addition, this space will be used for spilling out from lobby and café activities such as holiday parties, grad receptions, lectures, seminars and training. The landscape space directly adjacent to the building lobby is where a "carpet" of hardscape (unit pavers) will interweave and form a place to support informal socializing, gathering and building and cafe entry functions with generous space and seating under the cover of the building. This area is framed by the existing Oak to the north, Discovery Walk and the Café and building lobby. A "Dry Garden" edge of decorative gravel and reclaimed oak logs create an edge condition. This area is protected from the elements while providing a buffer from the lab windows. Site furnishings include modular wood benches and moveable tables and chairs.

The westside landscaping includes an entry garden for lower-level programs and is characterized by a sloped landscape and discreet pathway and stairway that descend from Welch Road to a lower-level hardscape entry garden. The program for this space includes a place for researchers and visitors to take a break, and is meant to be a meditative space dominated by greenery, as well as an opportunity to bring natural light and views into the basement interior spaces while providing secondary access to the building entry/exit for daily use and egress. The pathway includes a series of stairs. The stepped garden and lower-level courtyard require a series of retaining walls stepping down from along the edge of the path at Welch Road. The uppermost wall will facilitate stormwater control and overland release (see Civil Drawings). The sloped garden will be planted with ground-covering shrubs and perennials. The courtyard at the lower level has unit pavers, lighting, fixed modular benches and moveable tables and chairs. Additionally on the west side of the ground floor classroom there is a pathway from Discovery Walk to the building stair and west building entry. At this entry there are planters and bench seating.

South Landscape Buffer and Exiting program includes vegetated stormwater swale to allow for overland release during large stormwater events, maintenance and fire department access for the building and power transformers, and planting that can be seen from the interior program spaces. The landscape design elements include a path from the building exiting door and stair out to the sidewalk at Welch Road, a fence with gate for site control and maintenance access, decorative gravel under the building overhang with low plantings, groupings of shrubs with organic mulch and a vegetated swale. Vine plantings are to be planted along the loading dock wall metal screens (existing to be retained or re-installed).

In addition to the above the landscape design includes:

- Raised planters shall be cast-in-place concrete with textured surface built with reusable form liners on the outer facing surface, unless indicated otherwise.
- Paved patios and walkways shall be precast unit pavers over either cast-in-place concrete slab or compacted aggregate base.
- Site furnishings shall include a mix of high-quality durable moveable tables and chairs and fixed modular benches, metal bicycle racks, fixed workout equipment, a basketball net, and campus standard trash and recycling receptacles at three locations within the scope area.
- Fences, screens, guardrails: All fences are painted or powder-coated metal with locking gates to secure access along the south side of the building and maintenance-only areas at the east side of the site.
- A window maintenance clear area shall be maintained of min. 24" width off face of building with decomposed granite stone fines pavement or gravel mulch.
- All new plantings: shall have soil to minimum depth of 24" (see soil plan), and shall be irrigated using an automated irrigation system fed by lake water – requiring new equipment for control and water filtration. Screening plantings will be required around existing and new above grade utilities such as transformers and generators.
- Trees in or confined by paved areas shall have soil cells (see plan for extents) to support pavement and to ensure that trees have a min. of 800 cu ft of soil per tree.
- Storm drainage shall be managed with a series of area drains and slot drains at paved areas tied into the existing storm drainage system. All planting areas will require perforated sub-drainage lines to ensure proper drainage for plants and trees.
- Exterior Lighting and power shall be provided using campus standard pole lights (where appropriate) and bollards along pathways and entry plazas (see Materials Plan for types and layout). Lighting shall be provided to meet photometric requirements to ensure safe egress from buildings and passage along pathways. Power outlets shall be provided at numerous locations at East Plaza, Café and Main Entry area for event use and general device recharging.

SYMBOL LEGEND

SECTION	REVISION	PLANTER DRAIN (SUBDRAIN, TYP.)	PROPERTY LINE
ELEVATION	ALIGN	AREA DRAIN	LIMITS OF WORK
GRIDLINE	DOOR NUMBER	OVERFLOW DRAIN	MATCH LINE
ELEVATION	WINDOW NUMBER	SLOT DRAIN	PROPOSED CONTOUR
DETAIL PLAN / SECTION	KEY NOTE	CATCH BASIN	SOFT GRADE BREAK
DETAIL / WALL SECTION	MATERIAL TAG	PERFORATED PIPE SUBDRAIN	HARD GRADE BREAK
INTERIOR ELEVATION	CENTERLINE		RIDGE LINE

DRAWING INDEX ASA

Dicipline	SHEET #	SHEET NAME
LANDSCAPE	ASA-L0.00	LANDSCAPE GENERAL NOTES AND INDEX
LANDSCAPE	ASA-L0.10	LANDSCAPE MATERIAL AND PLANTING SCHEDULE
LANDSCAPE	ASA-L1.00	TREE DISPOSITION & PROTECTION PLAN
LANDSCAPE	ASA-L2.00	LANDSCAPE MATERIAL PLAN
LANDSCAPE	ASA-L2.00A	LANDSCAPE PLAN PHASE A
LANDSCAPE	ASA-L2.00B	LANDSCAPE PLAN PHASE B
LANDSCAPE	ASA-L2.10	LANDSCAPE SOIL & TREE PLAN
LANDSCAPE	ASA-L2.20	LANDSCAPE PRELIMINARY UNDERSTORY PLANTING PLAN
LANDSCAPE	ASA-L7.00	IRRIGATION GENERAL NOTES & LEGEND INDEX
LANDSCAPE	ASA-L7.10	IRRIGATION PLAN
LANDSCAPE	ASA-L7.20	IRRIGATION DETAILS
LANDSCAPE	ASA-L7.21	IRRIGATION DETAILS

ZGF
ZIMMER GUNSUL FRASCA ARCHITECTS LLP

DENVER
LOS ANGELES
NEW YORK
PORTLAND
SEATTLE
WASHINGTON, DC
VANCOUVER, BC

1223 SW Washington Street
Suite 200
Portland, OR 97205
503.224.3860
www.zgf.com

ZGF Project Number P26717.wrss

Consultant

INTERSTICE ARCHITECTS
ARCHITECTURE URBAN DESIGN
LANDSCAPE ARCHITECTURE
www.intersticearchitects.com
1173 Sutter Street, San Francisco
415.285.3960 CA 94109

Full Design Team Roster on Cover Sheet

Client and Project Information

Stanford MEDICINE

1215 WELCH RD.

STANFORD UNIVERSITY
SCHOOL OF MEDICINE

Original Issue
ASA SUBMITTAL 12.06.2024

Revisions
RESUBMITTAL 02.28.2025

Key Plan and Orientation

Sheet Status

Sheet Title
LANDSCAPE GENERAL NOTES AND INDEX

Sheet Number
ASA-L0.00

Current Issue
ASA SUBMITTAL

Current Issue Date
12.06.2024

Sheet Size: 24 x 36 | 0" | 1" | 2" | 3/4/2025 1:20:04 PM

PLANTING NOTES

1. ALL LANDSCAPE AND MAINTENANCE OF THE SAME SHALL CONFORM WITH ALL APPLICABLE CODES, ORDINANCES AND LAWS.

2. VERIFY ALL SITE CONDITIONS AND UTILITY LOCATIONS PRIOR TO COMMENCING WORK.

3. PERFORM FINE GRADING IN ALL PLANTING AREAS. COORDINATE FINISH GRADE TO ALLOW DEPTH OF MULCH AS SPECIFIED.

4. ALL PLANTS TO BE OF FINEST QUALITY AND FREE OF DISEASE OR DAMAGE.

5. PLANT MATERIALS AND STAKED LAYOUT TO BE APPROVED BY LANDSCAPE ARCHITECT PRIOR TO INSTALLATION.

6. SEE SPECIFICATIONS AND DETAILS FOR SOIL AMENDMENTS. PLANTING AND MAINTENANCE INSTRUCTIONS.

7. WHERE IN-THE-FIELD CONFLICTS ARISE BETWEEN PLANT AND UTILITY LOCATIONS, THE CONTRACTOR SHALL, WITH THE APPROVAL OF THE LANDSCAPE ARCHITECT, MAKE THE NECESSARY ADJUSTMENTS TO PLANT PLACEMENT IN ORDER TO ACHIEVE OPTIMUM DESIGN INTENT.

8. CONTRACTOR TO CALCULATE AND VERIFY PLANT QUANTITIES PRIOR TO SUBMITTAL OF PLANT MATERIAL FOR REVIEW BY LANDSCAPE ARCHITECT.

9. ALL PLANTING IS TO BE IRRIGATED BY AUTOMATED IRRIGATION SYSTEM UNLESS OTHERWISE NOTED; SEE IRRIGATION PLANS & SPECIFICATIONS

MATERIAL SCHEDULE

LABEL	DESCRIPTION	MANUFACTURER/SUPPLIER	MODEL / MODULE	COLOR/MATERIAL/FINISH	REMARKS	SPEC	DETAIL
FURNISHINGS							
F1	BENCH TYPE 1	STREETLIFE	SOLID SKIRT CURVED, 70" WITH BACKREST	WOOD / METAL	12' RADIUS FROM BACK OF BENCH	32 33 00	-
F2	BENCH TYPE 2	STREETLIFE	SOLID SKIRT STRAIGHT WITH BACKREST	WOOD / METAL	70" LENGTHS, 2' DEPTH	32 33 00	-
F3	MOVABLE TABLE AND CHAIRS	LANDSCAPE FORMS	TBD	POWDER-COATED METAL	SEE CUT SHEETS	-	-
F4	BENCH TYPE 4 - TWO-SIDED	STREETLIFE	SOLID SKIRT STRAIGHT WITH PARTIAL BACKREST	WOOD / METAL	81" LENGTHS, 4' DEPTH	32 33 00	-
F5	BICYCLE RACK	CREATIVE PIPE	-	BLACK	-	32 33 00	-
F6	TRASH/RECYCLING RECEPTACLE	VICTOR STANLEY	-	BLACK	-	32 33 00	-
F7	CAFE TRASH/RECYCLING RECEPTACLE	LANDSCAPE FORMS	SELECT	POWDER-COAT; COLOR TO BE SELECTED	DOUBLE UNIT	-	-
F8	TEMPORARY BICYCLE RACK	CREATIVE PIPE	-	BLACK	-	32 33 00	-
F9	BOLLARDS	CREATIVE PIPE	-	BLACK	REMOVABLE BOLLARDS AS REQUIRED FOR FIRE ACCESS, S.C.D.	32 33 00	-
F10	SLOT DRAIN	ACO	-	STAINLES STL.	-	32 33 00	-
F11	ADIRONDACK LOUNGE CHAIR	GARDENSIDE LTD.	-	TEAK WOOD	-	32 33 00	-
F12	HANDRAIL	-	-	STAINLESS STEEL / POLISH (BRUSHED)	-	32 33 00	-
F13	GUARDRAIL, S.A.D.	-	-	-	-	-	-
F14	FENCE WITH GATE	GREENSCREEN	-	BLACK	PAINTED STEEL	32 33 00	-
F15	SALVAGED TREE FEATURE	BAY AREA REDWOOD	-	-	SALVAGED FROM OAK TREES ON SITE	32 33 00	-
F16	RAISED METAL EDGE / PLANTER	CORTEN STUDIO	-	ALUMINUM / POWDER-COAT	-	32 33 00	-
F17	VINE SCREEN	GREENSCREEN	-	TO MATCH EXISTING	PAINTED STEEL	-	-
F18	EXISTING VINE SCREEN TO BE PROTECTED	GREENSCREEN	-	-	EXISTING	-	-
F19	SALVAGED TREE SEAT	-	-	NATURAL OAK	SEE SPECS	-	-
PAVING							
P1	PAVER - TYPE 1: ENTRY & EAST PLAZA	STEPSTONE	NARROW MODULAR PAVERS - 3"X18"	SEE SPECS	-	32 14 00	-
P2	PAVER - TYPE 2: ENTRY & EAST PLAZA	STEPSTONE	LARGE CALARC PAVERS - 6"X24"	SEE SPECS	-	32 14 00	-
P3	PAVER - TYPE 3: ENTRY & EAST PLAZA	STEPSTONE	LARGE CALARC PAVERS - 6"X24"	SEE SPECS	-	32 14 00	-
P4	PAVER - TYPE 4: DISCOVERY WALK	STEPSTONE	NARROW MODULAR PAVERS - 3"X18"	SEE SPECS	NARROW MODULAR, TO MATCH EXISTING DISCOVERY WALK	32 14 00	-
P5	PAVER - TYPE 5: SKY GARDEN	BASALITE	6"X18"	SEE SPECS	-	32 14 00	-
P6	VEHICULAR CONCRETE PAVEMENT	DAVIS COLORS	-	EXPOSED AGGREGATE, SEE SPECS.	-	32 32 13	S.S.D.
P7	CIP CONC PAVEMENT - INTEGRAL COLOR	DAVIS COLORS	-	DARK GREY, SEE SPECS.	-	32 32 13	-
P8	ASPHALT PAVING. S.C.D	-	-	-	REDWOOD EDGER, TYP.	-	-
P9	DECORATIVE GRAVEL SURFACE	LYNGSO GARDEN	3/4" DIAMETER	DESERT GOLD	-	32 15 00	-
P10	ORGANIC BARK MULCH	-	-	-	-	32 93 00	-
P11	METAL EDGE	JD RUSSEL	-	STEEL, BLACK POWDER-COAT	-	32 15 00	-
P12	TURF BLOCK, S.C.D	SOIL RETENTION	24"X24"	SEE SPECS	-	32 14 00 OR SEE CIVIL	-
P13	WOOD OR COMPOSITE HEADER	-	1" MIN. X LENGTH	-	-	-	-
P14	PAVER - TYPE 6: ENTRY & EAST PLAZA	STEPSTONE	LARGE CALARC PAVERS - 6"X24"	SEE SPECS	-	32 14 00	-
P15	PAVER - TYPE 7: SKY GARDEN	BASALITE	6"X18"	SEE SPECS	-	32 14 00	-
P16	CIP CONC PAVEMENT - INTEGRAL COLOR	DAVIS COLORS	-	-	-	32 32 13	-
P17	CONCRETE HEADER	DAVIS COLORS	-	SEE SPECS	-	32 32 13 OR SEE CIVIL	-
WALLS / CURBS / FEATURES							
C1	CIP CONC. STEPS	DAVIS COLORS	-	T.B.D. - SEE SPECS	-	32 32 13	-
C2	CIP CONC. RETAINING WALL - POTENTIAL SPECIES	DAVIS COLORS	-	T.B.D. - SEE SPECS	-	32 32 13	-

PLANTING SCHEDULE ASA

LABEL	SPECIES NAME	COMMON NAME	QTY	CONTAINER SIZE	SPACING	WATER	SOURCE	NATIVE	MATURE HxW	LOCATION/REMARKS
TREES										
QUE ENG	*QUERCUS ENGELMANNII*	ENGELMAN OAK	3	48" BOX	AS SHOWN	LOW	WUCOLS	NATIVE	40'-70' H x 40'-90' W	REPLACEMENT OAK
QUE LAC	*QUERCUS LACEYI*	LACY OAK	2	48" BOX	AS SHOWN	LOW	WUCOLS	ADAPTED	20'-30'H x 20'-30' W	DECIDUOUS
QUE SUB	*QUERCUS SUBER*	CORK OAK	1	48" BOX	AS SHOWN	LOW	WUCOLS	ADAPTED	40'-70' H x 30'-60' W	SEMI-EVERGREEN, REPLACEMENT OAK
QUE TOM	*QUERCUS TOMENTALLA*	ISLAND OAK	5	48" BOX	AS SHOWN	LOW	WUCOLS	NATIVE	30'-60' H x 20'-50' W	SUN TO PARTIAL SHADE; SELECT UPRIGHT STRUCTURE IN SPECIMENS
ULM PAR	*ULMUS PARVIFOLIA 'TRUE GREEN'*	CHINESE EVERGREEN ELM	9	48" BOX	AS SHOWN	LOW	WUCOLS	ADAPTED	40'-60' H x 40'-50' W	CULTIVAR, EVERGREEN; ALTERNATE: PISTACIA CHINENSIS 'KEITH DAVEY'
LARGE SHRUBS/SMALL TREES										
ARC DRH	*ARCTOSTAPHYLOS MANZANITA 'DR HURD'*	DR HURD MANZANITA	9	24" BOX	AS SHOWN	LOW	WUCOLS	NATIVE	15'-18' H x 15'-18' W	MULTI-TRUNK
ARC STH	*ARCTOSTAPHYLOS MANZANITA 'ST HELENA'*	ST HELENA MANZANITA	11	15 GAL.	AS SHOWN	LOW	WUCOLS	NATIVE	8'-12' H x 8'-12' W	MULTI-TRUNK
CER OCC1	*CERCIS OCCIDENTALIS (MULTI-TRUNK)*	WESTERN REDBUD	7	24" BOX	AS SHOWN	VERY LOW	WUCOLS	NATIVE	10'-20' H x 8'-12' W	MULTI-TRUNK
CER OCC2	*CERCIS OCCIDENTALIS (STANDARD)*	WESTERN REDBUD	2	24" BOX	AS SHOWN	VERY LOW	WUCOLS	NATIVE	10'-20' H x 8'-12' W	STANDARD
HET ARB	*HETERROMELES ARBUTIFOLIA 'DAVIS GOLD'*	DAVIS GOLD TOYON	2	15 GAL.	AS SHOWN	LOW	WUCOLS	NATIVE	15'-25' H x 10'-20' W	MULTI-TRUNK OR STANDARD
SHRUBS/GROUNDCOVERS										
ARC HMM	*ARCTOSTAPHYLOS DENSIFLORUS 'HOWARD MCMINN'*	MANZANITA HOWARD MCMINN	197	15 GAL.	AS SHOWN	LOW	WUCOLS	NATIVE	5'-8' H x 6'-7' W	SCREENING SHRUB
ARC HOO	*ARCTOSTAPHYLOS HOOKERI 'WAYSIDE'*	WAYSIDE MONTEREY MANZANITA	12	15 GAL.	6' O.C.	LOW	WUCOLS	NATIVE	2'-4' H x 6'-8' W	MOUNDING SHRUB
BAC PUL	*BACCHARIS PULARIS 'PIGEON POINT'*	DWARF COYOTE BUSH	8	5 GAL.	6' O.C.	LOW	WUCOLS	NATIVE	2'-3' H x 7'-9' W	BANK STABILIZING GROUND COVER, HABITAT
CEA CON	*CEANOTHUS 'CONCHA'*	CONCHA CALIFORNIA WILD LILAC	32	10 GAL.	6' O.C.	LOW	WUCOLS	NATIVE	6'-8' H x 6'-8' W	HABITAT
CEA GLO	*CEANOTHUS GLORIOSUS 'ANCHOR BAY'*	POINT REYES CALIFORNIA WILD LILAC	10	10 GAL	6' O.C.	LOW	WUCOLS	NATIVE	2' H x 6'-8' W	HABITAT/GROUNDCOVERING
CEA JUL	*CEANOTHUS 'JULIA PHELPS'*	CALIFORNIA WILD LILAC	9	10 GAL	8' O.C.	LOW	WUCOLS	NATIVE	6'-8' H x 8'-10' W	HABITAT
CEA SKY	*CEANOTHUS THYRSIFLORUS 'SKYLARK'*	BLUE MOUNTAIN LILAC	104	10 GAL.	4' O.C.	LOW	WUCOLS	NATIVE	3'-5' H x 3'-5' W	HABITAT
CYC REV	*CYCAS REVOLTA*	SAGO PALM	6	10 GAL	4' O.C.	MOD	WUCOLS	ADAPTED	4'-8' H x 5'-7' W	2' 3 HT WHEN YOUNG, SLOW GROWER
EPI CAN	*EPILOBIUM CANUM (ZAUSCHNERIA) 'SIDEWINDER'*	CALIFORNIA FUSCHIA	56	5 GAL	2' O.C.	LOW	WUCOLS	NATIVE	1'-2' H x 2'-3' W	HABITAT
FRA LEA	*FRANGULA CALIFORNICA 'LEATHERLEAF'*	LEATHERLEAF COFFEEBERRY	23	10 GAL.	6' O.C.	LOW	WUCOLS	NATIVE	4'-8' H x 4'-8' W	SCREENING SHRUB
FRA MSB	*FRANGULA CALIFORNICA 'MOUND SAN BRUNO'*	COFFEEBERRY	63	10 GAL.	5' O.C.	LOW	WUCOLS	NATIVE	3'-5' H x 4'-8' W	LOW SHRUB
NAN DOM	*NANDINA DOMESTICA 'GULF STREAM'*	HEAVENLY BAMBOO GULF STREAM	52	5 GAL.	3' O.C.	LOW	WUCOLS	ADAPTED	3'-4' H x 3'-4' W	GOOD FOR DRYISH SHADE
PIT TOB	*PITTOSPORUM TOBIRA 'WHEELER DWARF'*	WHEELER'S DWARF PITTOSPORUM	20	5 GAL.	4' O.C.	LOW	WUCOLS	ADAPTED	2'-3" H x 4'-5' W	
RIB VIB	*RIBES VIBURNIFOLIU*	EVERGREEN CURRANT	9	5 GAL.	8' O.C.	LOW	WUCOLS	NATIVE	3'-6' H x 8'-10' W	GOOD FOR DRYISH SHADE, SKY GARDEN BANKS
SAL CLE	*SALVIA CLEVELANDII 'WINNIFRED GILMAN'*	WINNIFRED GILMAN CLEVELAND SAGE	6	5 GAL.	5' O.C.	LOW	WUCOLS	NATIVE	3'-5' H x 4'-6' W	FRAGRANT, HABITAT PLANT
SAR RUS	*SARCOCOCCA RUSCIFOLIA*	SWEET BOX	19	5 GAL	4' O.C.	LOW	WUCOLS	ADAPTED	4'-6' H x 3'-7' W	GOOD FOR DRYISH SHADE, HAGEY ENTRY
PERENNIALS/FERNS/GRASSES										
ACA MOL	*ACANTHUS MOLLIS*	BEAR'S BREECH	16	5 GAL.	3' O.C.	MOD	WUCOLS	WUCOLS	3' H x 3' W	DRY SHADE; DEEP SHADE, FLOWER STALKS
ASP DEN	*ASPARAGUS DENSIFLORUS 'MEYERSII'*	MEYER ASPARAGUS FERN	65	5 GAL.	3' O.C.	MOD	WUCOLS	ADAPTED	2' H x 3' W	DRY SHADE
CYR FAL	*CYRTOMIUM FALCATUM*	JAPANESE HOLLY FERN	21	5 GAL	2' O.C.	MOD	WUCOLS	ADAPTED	1'-2' H x 2'-3' W	DRY SHADE
HEU MAX	*HEUCHERA MAXIMA*	ISLAND ALUM ROOT	12	5 GAL.	3' O.C.	MOD	WUCOLS	NATIVE	1'-2' H x 2'-3' W	DRY SHADE
LOM BRE	*LOMANDRA LONGIFOLIA 'BREEZE'*	MATT RUSH	19	5 GAL	3' O.C.	LOW	WUCOLS	ADAPTED	2'-3' H x 2'-3' W	SHADE AND SUN
NEP COR	*NEPHROLEPSIS CORDIFOLIA*	SOUTHERN SWORD FERN	66	5 GAL.	3.5' O.C.	MOD	WUCOLS	ADAPTED	2'-3' H x 5' W	SHADE
POL STI	*POLYSTICHUM MUNITUM*	WESTERN SWORD FERN	51	5 GAL.	3' O.C.	MOD	WUCOLS	NATIVE	2'-4' H x 2'-4' W	SHADE
RUM ADI	*RUMOHRA ADIANTIFORMIS*	LEATHERLEAF FERN	62	5 GAL	3' O.C.	MOD	WUCOLS	ADAPTED	2'-4' H x 2'-3' W	SHADE
WOO FIM	*WOODWARDIA FIMBRIATA*	GIANT CHAIN FERN	32	10 GAL	4' O.C.	MOD/MED	WUCOLS	NATIVE	4'-5' H x 3' W	SHADE
VINES										
DIS BUC	*DISTICTUS BUCCINATORIA (BIGONIA CHERERE)*	BLOOD RED TRUMPET VINE	38	15 GAL.	AS SHOWN	MOD	WUCOLS	ADAPTED	20'-30' H	TWINING VINE, RED FLOWERS, HUMMING BIRD ATTRACTOR
FIC PUM	*FICUS PUMILA*	CLIMBING FIG	18	5 GAL.	AS SHOWN	MOD	WUCOLS	ADAPTED	30' H	SELF-ADHERING VINE
GEL SEM	*GELSEMIUM SEMPERVIRENS*	CAROLINA JESSAMINE	34	15 GAL	AS SHOWN	LOW	WUCOLS	ADAPTED	12'-20' H	TWINING, FRAGRANT, EVERGREEN
JAS POL	*JASMINUM POLYANTHUM*	PINK JASMINE VINE	5	15 GAL.	AS SHOWN	LOW	WUCOLS	ADAPTED	20' H	TWINING, LIGHT PINK FLOWERS, EVERGREEN

Sheet Size: 24 x 36 | 0" | 1" | 2" | 4/22/2025 4:54:35 PM

ZGF
ZIMMER GUNSUL FRASCA ARCHITECTS LLP

DENVER
LOS ANGELES
NEW YORK
PORTLAND
SEATTLE
WASHINGTON, DC
VANCOUVER, BC

1223 SW Washington Street
Suite 200
Portland, OR 97205
503.224.3860
www.zgf.com

ZGF Project Number P26717.wrss

Consultant

INTERSTICE ARCHITECTS
ARCHITECTURE URBAN DESIGN
LANDSCAPE ARCHITECTURE
www.intersticearchitects.com
1173 Sutter Street, San Francisco
415.285.3960 CA 94109

Full Design Team Roster on Cover Sheet

Client and Project Information

Stanford MEDICINE

1215 WELCH RD.

STANFORD UNIVERSITY
SCHOOL OF MEDICINE

Original Issue
ASA SUBMITTAL 12.06.2024

Revisions
RESUBMITTAL 02.28.2025
RESUBMITTAL 2 04.22.2025

Key Plan and Orientation

Sheet Status

Sheet Title
LANDSCAPE MATERIAL & PLANTING SCHEDULES

Sheet Number
ASA-L0.10

Current Issue
ASA SUBMITTAL

Current Issue Date
12.06.2024

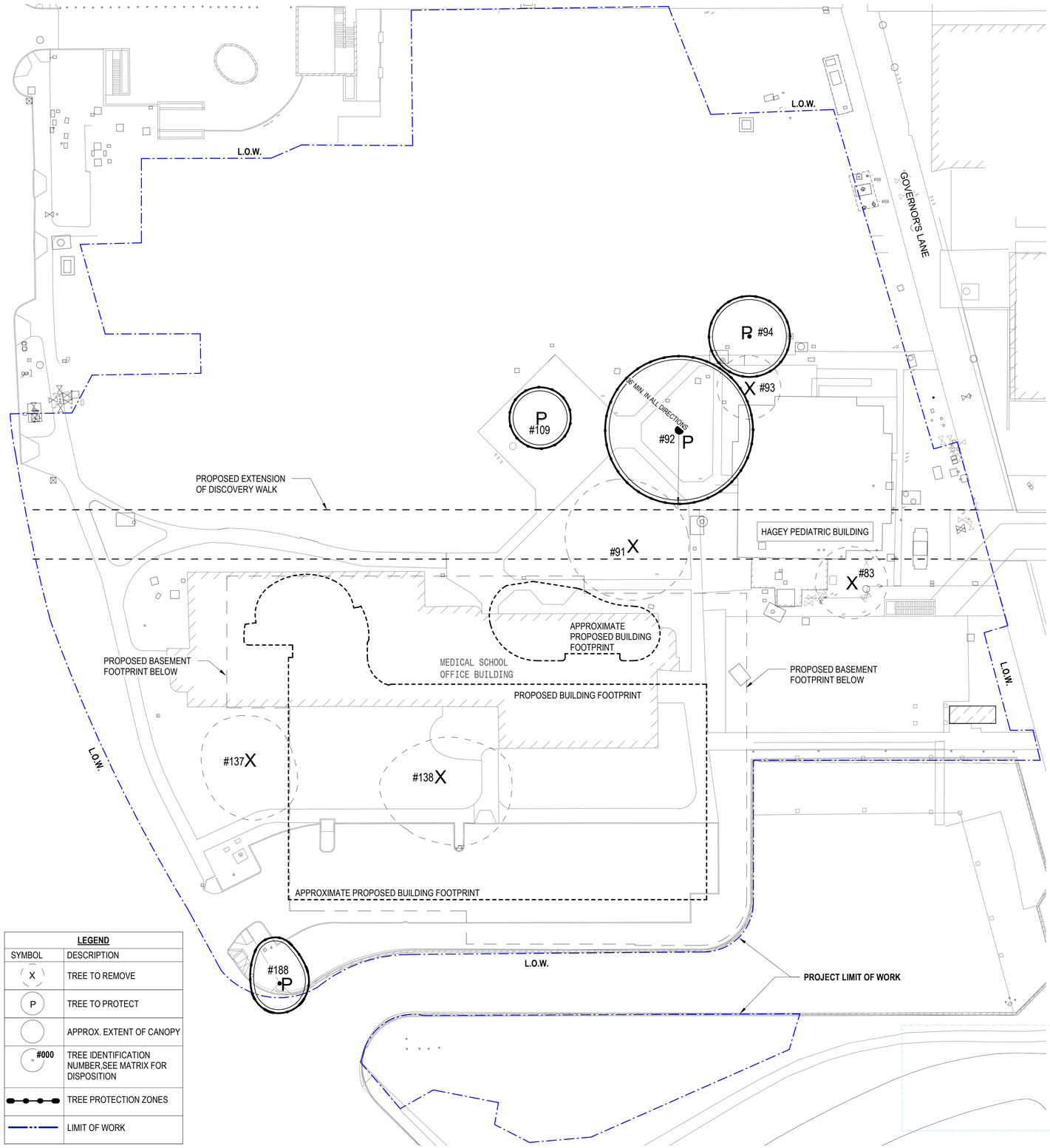

LEGEND	
SYMBOL	DESCRIPTION
X	TREE TO REMOVE
P	TREE TO PROTECT
	APPROX. EXTENT OF CANOPY
#000	TREE IDENTIFICATION NUMBER,SEE MATRIX FOR DISPOSITION
	TREE PROTECTION ZONES
	LIMIT OF WORK

2 TREE PROTECTION & DISPOSITION PLAN
1" = 30'-0"

1" = 30'-0" SCALE: 0 5 10 15 30 60

TREE DISPOSITION AND PROTECTION NOTES

1. TREE NUMBERS REFERENCE ARBORIST REPORTS BY AMBER GRAVES ALVARES OF MONARCH TREE SERVICES AND TOREY YOUNG OF DRYAD, LLC.

2. ALL TREE PROTECTION AND INSPECTION SCHEDULE MEASURES, DESIGN RECOMMENDATIONS, WATERING AND CONSTRUCTION SCHEDULING SHALL BE IMPLEMENTED IN FULL BY OWNER AND CONTRACTOR, AS STATED IN THE APPROVED PLANS.

3. ALL TREE PROTECTION METHODS SHALL COMPLY WITH STANDARDS SET BY SANTA CLARA COUNTY TREE PROTECTION GUIDELINES (https://www.sccgov.org/sites/dpd/DocsForms/Documents/Brochure_TreePreservation.pdf)

4. ALL TREES INDICATED AS "PROTECTED" ARE CONSIDERED "REGULATED TREES," BEFORE WORKING IN THIS AREA CONTACT THE PROJECT ARBORISTS.

5. STANFORD UNIVERSITY HAS STRICT REQUIREMENTS INCLUDING THE POINTS AND PROCEDURES WITHIN THESE NOTES. ADDITIONALLY ALL TREE PROTECTION SHALL COMPLY WITH STANDARDS AND REQUIREMENTS AS SET FORTH IN STANFORD UNIVERSITY FACILITIES DESIGN GUIDELINES - 2021 FDG SECTION 01 56 39.

6. A STANFORD GROUNDS SERVICES CERTIFIED ARBORIST SHALL BE CONTACTED TO EVALUATE ALL WORK WITHIN ANY TREES' ROOT ZONES OR TREE PROTECTION ZONES.

7. THE ROOT ZONE OF ALL TREES THAT ARE DESIGNATED "PROTECTED IN PLACE" MUST BE PROTECTED AS DESCRIBED HEREIN. A TREE'S ROOT ZONE IS DEFINED AS THE DRIPLINE.

8. THE "TREE PROTECTION ZONE"SHALL BE ESTABLISHED TO PROTECT THE ROOT ZONE OF ALL TREES THAT ARE TO BE PROTECTED. THE TREE PROTECTION ZONE SHALL BE THE AREA DEFINED BY THE DRIPLINE.

9. ALL TREES TO REMAIN ON A PROJECT SHALL HAVE PROTECTIVE FENCING INSTALLED PER THE TREE PROTECTION DRAWING INCLUDED IN THE PLAN SET.

10. PROTECTIVE FENCING SHALL BE 5-FOOT HEIGHT CHAIN LINK ON SECURE FOOTINGS, OR IMBEDDED AS REQUIRED BY THE CAMPUS PLANNING OFFICE OR A STANFORD UNIVERSITY GROUNDS SERVICES CERTIFIED ARBORIST, THAT WILL NOT FALL OVER ONTO TREES.

11. PROTECTIVE FENCING SHALL BE PLACED AT THE OUTER EDGE OF THE ROOT ZONE IN ALL DIRECTIONS. IF PROJECT CONSTRAINTS DO NOT ALLOW FOR
FENCING AT THE OUTER EDGE OF THE ROOT ZONE, FENCING MUST BE PLACED AS CLOSE TO THIS AS POSSIBLE AND APPROVED AFTER IT IS IN PLACE BY A STANFORD UNIVERSITY GROUNDS SERVICES CERTIFIED ARBORIST.

12. LAYDOWN, STAGING AND PARKING AREAS SHALL BE APPROVED BY THE STANFORD UNIVERSITY ARCHITECT/CAMPUS PLANNING DEPARTMENT AND SHALL BE SHOWN ON THE PLANS IF WITHIN THE PROJECT LIMIT AREA, OR ON THE CONSTRUCTION LOGISTICS PLAN IF OUTSIDE THE PROJECT LIMIT AREA. ALL TREE PROTECTION GUIDELINES APPLY TO TREES IN LAYDOWN, STAGING AND PARKING AREAS AS WELL AS TO TREES WITHIN THE PROJECT LIMITS.

13. CONSTRUCTION MATERIALS/EQUIPMENT/PERSONAL VEHICLES SHALL NOT BE STORED, PARKED OR TEMPORARILY PLACED IN THE ROOT ZONES OF ANY TREES. NOTHING SHALL BE STORED OR PLACED TEMPORARILY WITHIN PROTECTIVE FENCING, TO AVOID SOIL COMPACTION AND SOIL CONTAMINATION UNDER TREES. ROOT ZONES OF TREES SHALL NOT BE DRIVEN OVER. PROVIDE ALTERNATIVE ROUTES FOR CONSTRUCTION TRAFFIC OF ANY KIND INCLUDING CARS, PEOPLE, TRACTORS, EQUIPMENT, CRANES, OR ANY OTHER TRAFFIC AND ALL STAGING OR STORAGE AREAS.

14. PROTECT OVERHANGING TREE CANOPIES FROM CONSTRUCTION DAMAGE. IF DRIVE AISLES ARE ANTICIPATED UNDER LOW CANOPIES CALL FOR AN EVALUATION BY A STANFORD GROUNDS SERVICES CERTIFIED ARBORIST TO DETERMINE APPROPRIATE MEASURES.

15. THERE SHALL BE NO GRADE CHANGE WITHIN A MINIMUM OF TEN FEET OF THE TRUNK OF EXISTING TREES.

16. NO RINSING, CLEANING EQUIPMENT OR DUMPING CONSTRUCTION LIQUID MATERIALS SHALL BE ALLOWED IN THE TREE ROOT ZONE, OR IN AN AREA THAT DRAINS INTO THE ROOT ZONE. CARE SHALL BE TAKEN IN CLEANING UP EQUIPMENT. THERE SHALL BE NO STORAGE OF DUMPSTERS OR ACCUMULATED DEBRIS FROM DEMOLITION ON OR AROUND THE ROOT ZONES OF EXISTING TREES AND SHRUBS.

17. EXISTING TREES SHALL BE MONITORED WEEKLY AND IRRIGATED AS NEEDED DURING THE COURSE OF CONSTRUCTION.

18. NO LIME OR OTHER SOIL TREATMENT SHALL BE APPLIED WITHOUT THE CONSENT OF A STANFORD GROUNDS SERVICES CERTIFIED ARBORIST.

19. ALL TRENCHING SHALL CONFORM TO THE FOLLOWING GUIDELINES.

A.STANFORD GROUNDS SERVICES CERTIFIED ARBORIST IS REQUIRED TO BE PRESENT TO SUPERVISE ANY TRENCHING, DIGGING OR EXCAVATION OF ANY KIND WITHIN A TREES' ROOT ZONE.

B.ROOTS LARGER THAN 2 INCHES IN DIAMETER SHALL NOT BE SEVERED WITHOUT CALLING A STANFORD GROUNDS SERVICES CERTIFIED ARBORIST FOR CUTTING OR REVIEW.

C.TUNNELING OR BORING UNDER ROOTS RATHER THAN PRUNING IS PREFERRED.

D.DIGGING WITHIN A TREE'S ROOT ZONE SHALL BE AVOIDED. IF IT IS NECESSARY, HAND DIGGING SHALL BE USED FOR ANY TRENCHING WITHIN THE TREE'S ROOT ZONE UNLESS OTHERWISE APPROVED BY A STANFORD GROUNDS SERVICES CERTIFIED ARBORIST.

E.ALL ROOTS THAT NEED TO BE CUT SHALL BE PRUNED CLEANLY, NOT TORN.

20. THE PRECEDING GUIDELINES SHALL BE CONSIDERED MINIMUM REQUIREMENTS. THE GREATER THE DISTANCE OF TREE PROTECTION PROVIDED THE GREATER THE INSTANCE OF TREE SUCCESS IN CONSTRUCTION AREAS.

Tag No.	Common name	Genus-species	Trunk Diameter (inches)	Tree > 12" DBH	Tree Age	Previous ASA/Name & #	Protected Y/N	Tree Disposition	Mitigation Required
83	Chinese elm	*Ulmus parvifolia*	17.5	Yes	<40	No	No	Remove	None
91	Coast live oak	*Quercus agrifolia*	44.0	Yes	>40	Original MSOB Construction ASA; #2340-06-82-84P-84A	Yes	Remove	3 Replacement Trees.
92	Coast live oak	*Quercus agrifolia*	54.0	Yes	>40	Original MSOB Construction ASA; #2340-06-82-84P-84A	Yes	**Protect**	None
93	Chinese elm	*Ulmus parvifolia*	19.0	Yes	<40	No	No	Remove	None
94	Coast live oak	*Quercus agrifolia*	22.0	Yes	>40	Original MSOB Construction ASA; #2340-06-82-84P-84A	Yes	**Protect**	None
109	Chinese pistache	*Pistachia chinensis*	13.5	Yes	<40	No	No	**Protect**	None
137	Blue oak	*Quercus douglasii*	38.0	Yes	>40	Original MSOB Construction ASA; #2340-06-82-84P-84A	Yes	Remove	3 Replacement Trees.
138	Coast live oak	*Quercus agrifolia*	85.0	Yes	>40	Original MSOB Construction ASA; #2340-06-82-84P-84A	Yes	Remove	3 Replacement Trees.
188	Coast live oak	*Quercus agrifolia*	28.0	Yes	>40	Loading Dock Project; #9626-06-82-07A-07G	Yes	**Protect**	None

NOTE: THE APPROXIMATE AGE OF THE TREES HAS BEEN ESTIMATED BASED ON THE RECORDS FROM THE ORIGINAL MSOB PROJECT ASA# 2340-06-82-84P-84A FROM 1984. TREES SHOWN ON THAT ASA ARE ASSUMED TO BE OLDER THAN 40 YEARS AND ADDITIONAL TREES IN THE CURRENT ARBORIST REPORT ARE ASSUMED TO HAVE BEEN PLANTED AFTER 1984.

1 TREE DISPOSITION MATRIX
NTS

ZGF
ZIMMER GUNSUL FRASCA ARCHITECTS LLP

DENVER
LOS ANGELES
NEW YORK
PORTLAND
SEATTLE
WASHINGTON, DC
VANCOUVER, BC

1223 SW Washington Street
Suite 200
Portland, OR 97205
503.224.3860
www.zgf.com

ZGF Project Number P26717.wrss

Consultant

INTERSTICE ARCHITECTS
ARCHITECTURE URBAN DESIGN
LANDSCAPE ARCHITECTURE
www.intersticearchitects.com
1173 Sutter Street, San Francisco
415.285.3960 CA 94109

Full Design Team Roster on Cover Sheet

Client and Project Information

Stanford MEDICINE

1215 WELCH RD.

STANFORD UNIVERSITY
SCHOOL OF MEDICINE

Original Issue
ASA SUBMITTAL 12.06.2024

Revisions
RESUBMITTAL 02.28.2025

Key Plan and Orientation

Sheet Status

Sheet Title
TREE DISPOSITION & PROTECTION PLAN

Sheet Number
ASA-L1.00

Current Issue
ASA SUBMITTAL

Current Issue Date
12.06.2024

3/4/2025 1:20:11 PM
2" 1" 0"
Sheet Size: 24 x 36

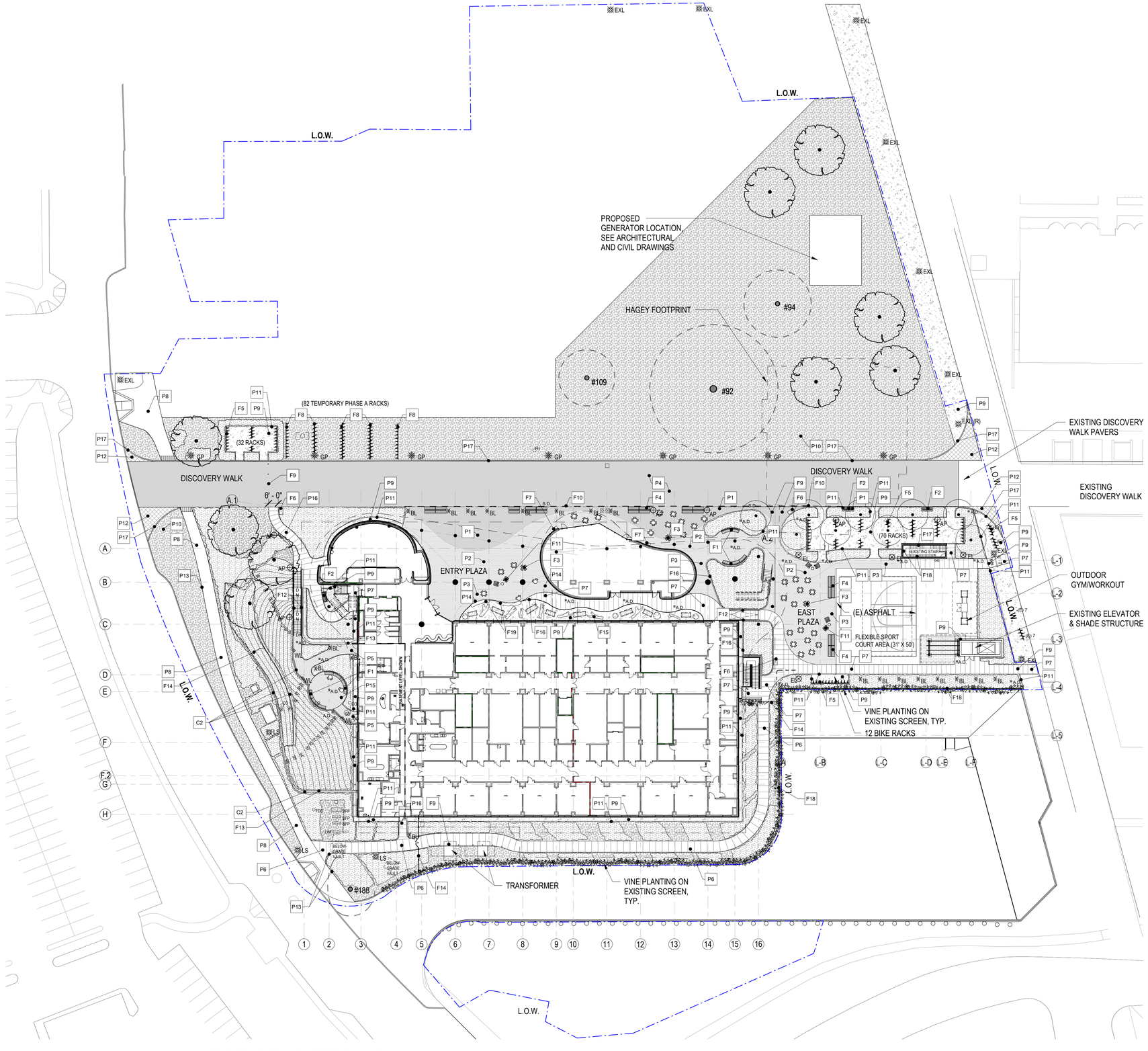

1 LANDSCAPE MATERIAL PLAN
1" = 30'-0"

SHEET NOTES

1. SEE CIVIL DRAWINGS FOR EXISTING SURVEY, CURB & STREET LAYOUT / ALIGNMENT, GRADING, DRAINAGE AND ALL UTILITIES.
2. AREA ADJACENT TO L.O.W. SHOWN FOR REFERENCE ONLY, N.I.C.
3. ALL PAVED AREAS SHALL HAVE A MIN. CROSS SLOPE OF 1.0% AND MAX. CROSS SLOPE OF 1.9% UNLESS OTHERWISE INDICATED.
4. ALL LANDSCAPE PLANTING SHALL BE IRRIGATED WITH LOW FLOW IRRIGATION SYSTEM AND SHALL COMPLY WITH MODEL WATER EFFICIENT LANDSCAPE ORDINANCE (MWELO) IN EFFECT.
5. SEE ELECTRICAL DRAWINGS FOR LIGHTING LAYOUT.
6. TOTAL OF 114 PROPOSED BICYCLE PARKING RACKS PROVIDED.

LEGEND

SYMBOL	DESCRIPTION
	DECORATIVE GRAVEL
	UNIT PAVER WITH OPEN JOINTS
	UNIT PAVERS - SEE KEYNOTES FOR TYPE
	UNIT PAVERS - DISCOVERY WALK
	PLANTING
	DG STONE FINES
	BARK MULCH
	TURF BLOCK
P.D.	PLANTER DRAIN / INSPECTION
A.D.	AREA DRAIN
S.D.	SLOT DRAIN
EXL	(E) LANTERN STYLE POLE LIGHT
EXL (R)	RELOCATED (E) LANTERN STYLE POLE LIGHT
GP	GLOBE POLE LIGHT
AP	AREA POLE LIGHT
BL	BOLLARD LIGHT
EL	EVENT POLE LIGHT

TREE LEGEND

SYMBOL	LABEL	QTY
#XX	EXISTING TREE, TO BE PROTECTED	4
	PROPOSED MITIGATION TREE	9
	PROPOSED TREE	9

MATERIAL KEY NOTES

FURNISHINGS	
F1	BENCH TYPE 1
F2	BENCH TYPE 2
F3	MOVABLE TABLE AND CHAIRS
F4	BENCH TYPE 4 - TWO-SIDED
F5	BICYCLE RACK
F6	TRASH/RECYCLING RECEPTACLE
F7	CAFE TRASH/RECYCLING RECEPTACLE
F8	TEMPORARY BICYCLE RACK
F9	BOLLARDS
F10	SLOT DRAIN
F11	ADIRONDACK LOUNGE CHAIR
F12	HANDRAIL
F13	GUARDRAIL, S.A.D.
F14	FENCE WITH GATE
F15	SALVAGED TREE FEATURE
F16	RAISED METAL EDGE / PLANTER
F17	VINE SCREEN
F18	EXISTING VINE SCREEN TO BE PROTECTED
F19	SALVAGED TREE SEAT
PAVING	
P1	PAVER - TYPE 1: ENTRY & EAST PLAZA
P2	PAVER - TYPE 2: ENTRY & EAST PLAZA
P3	PAVER - TYPE 3: ENTRY & EAST PLAZA
P4	PAVER - TYPE 4: DISCOVERY WALK
P5	PAVER - TYPE 5: SKY GARDEN
P6	VEHICULAR CONCRETE PAVEMENT
P7	CIP CONC PAVEMENT - INTEGRAL COLOR
P8	ASPHALT PAVING. S.C.D
P9	DECORATIVE GRAVEL SURFACE
P10	ORGANIC BARK MULCH
P11	METAL EDGE
P12	TURF BLOCK, S.C.D
P13	WOOD OR COMPOSITE HEADER
P14	PAVER - TYPE 6: ENTRY & EAST PLAZA
P15	PAVER - TYPE 7: SKY GARDEN
P16	CIP CONC PAVEMENT - INTEGRAL COLOR
P17	CONCRETE HEADER
WALLS / CURBS / FEATURES	
C1	CIP CONC. STEPS
C2	CIP CONC. RETAINING WALL

1" = 30'-0" SCALE: 0 5 10 15 30 60

ZGF
ZIMMER GUNSUL FRASCA ARCHITECTS LLP

DENVER
LOS ANGELES
NEW YORK
PORTLAND
SEATTLE
WASHINGTON, DC
VANCOUVER, BC

1223 SW Washington Street
Suite 200
Portland, OR 97205
503.224.3860
www.zgf.com

ZGF Project Number P26717.wrss

Consultant

INTERSTICE ARCHITECTS
ARCHITECTURE URBAN DESIGN
LANDSCAPE ARCHITECTURE
www.intersticearchitects.com
1173 Sutter Street, San Francisco
415.285.3960 CA 94109

Full Design Team Roster on Cover Sheet

Client and Project Information

Stanford MEDICINE

1215 WELCH RD.

STANFORD UNIVERSITY
SCHOOL OF MEDICINE

Original Issue
ASA SUBMITTAL 12.06.2024

Revisions
RESUBMITTAL 02.28.2025
RESUBMITTAL 2 04.22.2025

Key Plan and Orientation

Sheet Status

Sheet Title
LANDSCAPE MATERIAL PLAN

Sheet Number
ASA-L2.00

Current Issue
ASA SUBMITTAL

Current Issue Date
12.06.2024

Sheet Size: 24 x 36 | 0" | 1" | 2" | 4/22/2025 4:54:40 PM

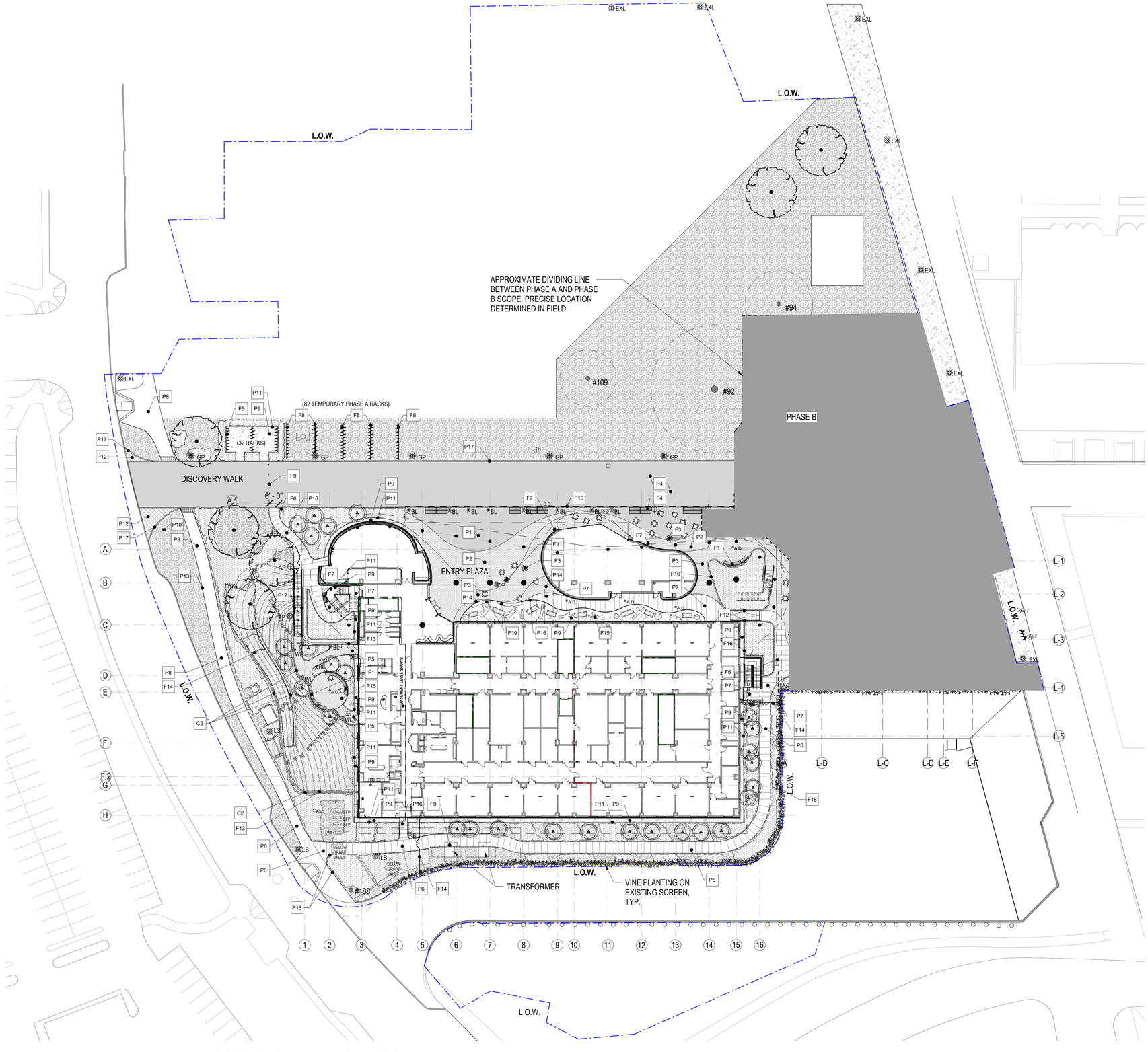

1 LANDSCAPE PLAN - PHASE A

1" = 30'-0"

SHEET NOTES

1. SEE CIVIL DRAWINGS FOR EXISTING SURVEY, CURB & STREET LAYOUT / ALIGNMENT, GRADING, DRAINAGE AND ALL UTILITIES.

2. AREA ADJACENT TO L.O.W. SHOWN FOR REFERENCE ONLY, N.I.C.

3. ALL PAVED AREAS SHALL HAVE A MIN. CROSS SLOPE OF 1.0% AND MAX. CROSS SLOPE OF 1.9% UNLESS OTHERWISE INDICATED.

4. ALL LANDSCAPE PLANTING SHALL BE IRRIGATED WITH LOW FLOW IRRIGATION SYSTEM AND SHALL COMPLY WITH MODEL WATER EFFICIENT LANDSCAPE ORDINANCE (MWELO) IN EFFECT.

5. SEE ELECTRICAL DRAWINGS FOR LIGHTING LAYOUT.

6. TOTAL OF 114 PROPOSED BICYCLE PARKING RACKS PROVIDED.

LEGEND

SYMBOL	DESCRIPTION
	DECORATIVE GRAVEL
	UNIT PAVER WITH OPEN JOINTS
	UNIT PAVERS - SEE KEYNOTES FOR TYPE
	UNIT PAVERS - DISCOVERY WALK
	PLANTING
	DG STONE FINES
	BARK MULCH
	TURF BLOCK
P.D.	PLANTER DRAIN / INSPECTION
A.D.	AREA DRAIN
S.D.	SLOT DRAIN
EXL	(E) LANTERN STYLE POLE LIGHT
EXL (R)	RELOCATED (E) LANTERN STYLE POLE LIGHT
GP	GLOBE POLE LIGHT
AP	AREA POLE LIGHT
BL	BOLLARD LIGHT
EL	EVENT POLE LIGHT

TREE LEGEND

SYMBOL	LABEL	QTY
#XX	EXISTING TREE, TO BE PROTECTED	4
	PROPOSED MITIGATION TREE	9
	PROPOSED TREE	9

MATERIAL KEY NOTES

FURNISHINGS	
F1	BENCH TYPE 1
F2	BENCH TYPE 2
F3	MOVABLE TABLE AND CHAIRS
F4	BENCH TYPE 4 - TWO-SIDED
F5	BICYCLE RACK
F6	TRASH/RECYCLING RECEPTACLE
F7	CAFE TRASH/RECYCLING RECEPTACLE
F8	TEMPORARY BICYCLE RACK
F9	BOLLARDS
F10	SLOT DRAIN
F11	ADIRONDACK LOUNGE CHAIR
F12	HANDRAIL
F13	GUARDRAIL, S.A.D.
F14	FENCE WITH GATE
F15	SALVAGED TREE FEATURE
F16	RAISED METAL EDGE / PLANTER
F17	VINE SCREEN
F18	EXISTING VINE SCREEN TO BE PROTECTED
F19	SALVAGED TREE SEAT
PAVING	
P1	PAVER - TYPE 1: ENTRY & EAST PLAZA
P2	PAVER - TYPE 2: ENTRY & EAST PLAZA
P3	PAVER - TYPE 3: ENTRY & EAST PLAZA
P4	PAVER - TYPE 4: DISCOVERY WALK
P5	PAVER - TYPE 5: SKY GARDEN
P6	VEHICULAR CONCRETE PAVEMENT
P7	CIP CONC PAVEMENT - INTEGRAL COLOR
P8	ASPHALT PAVING. S.C.D
P9	DECORATIVE GRAVEL SURFACE
P10	ORGANIC BARK MULCH
P11	METAL EDGE
P12	TURF BLOCK, S.C.D
P13	WOOD OR COMPOSITE HEADER
P14	PAVER - TYPE 6: ENTRY & EAST PLAZA
P15	PAVER - TYPE 7: SKY GARDEN
P16	CIP CONC PAVEMENT - INTEGRAL COLOR
P17	CONCRETE HEADER
WALLS / CURBS / FEATURES	
C1	CIP CONC. STEPS
C2	CIP CONC. RETAINING WALL

1" = 30'-0" SCALE: 0 5 10 15 30 60

ZGF
ZIMMER GUNSUL FRASCA ARCHITECTS LLP

DENVER
LOS ANGELES
NEW YORK
PORTLAND
SEATTLE
WASHINGTON, DC
VANCOUVER, BC

1223 SW Washington Street
Suite 200
Portland, OR 97205
503.224.3860
www.zgf.com

ZGF Project Number P26717.wrss

Consultant

INTERSTICE ARCHITECTS
ARCHITECTURE URBAN DESIGN
LANDSCAPE ARCHITECTURE
www.interstice architects.com
1173 Sutter Street, San Francisco
415.285.3960 CA 94109

Full Design Team Roster on Cover Sheet

Client and Project Information

Stanford MEDICINE

1215 WELCH RD.

STANFORD UNIVERSITY
SCHOOL OF MEDICINE

Original Issue
ASA SUBMITTAL 12.06.2024

Revisions
RESUBMITTAL 02.28.2025
RESUBMITTAL 2 04.22.2025

Key Plan and Orientation

Sheet Status

Sheet Title
LANDSCAPE PLAN
PHASE A

Sheet Number
ASA-L2.00A

Current Issue
ASA SUBMITTAL

Current Issue Date
12.06.2024

Sheet Size: 24 x 36 | 0" | 1" | 2" | 4/22/2025 4:54:45 PM

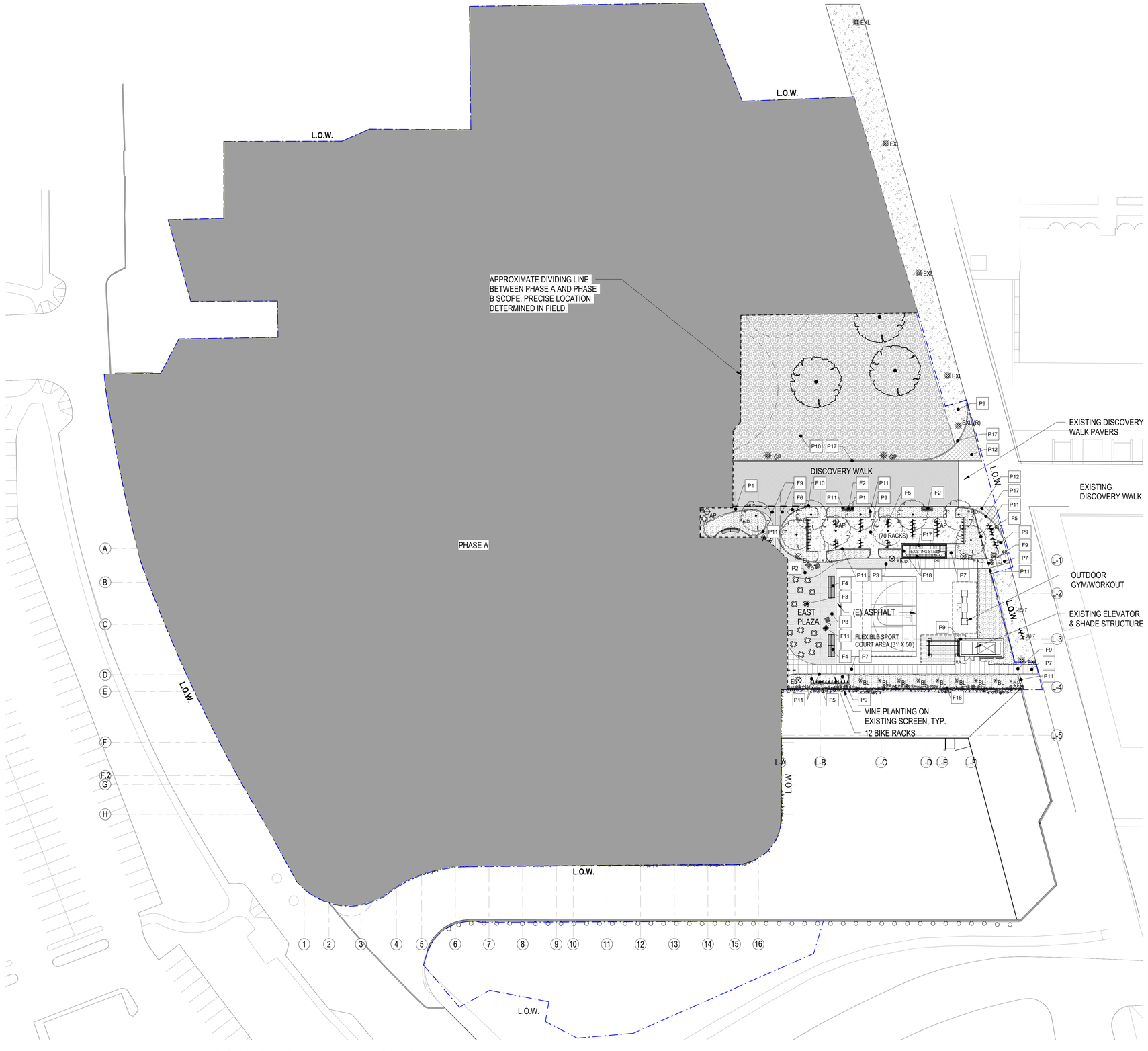

1 LANDSCAPE PLAN - PHASE C
1" = 30'-0"

SHEET NOTES

1. SEE CIVIL DRAWINGS FOR EXISTING SURVEY, CURB & STREET LAYOUT / ALIGNMENT, GRADING, DRAINAGE AND ALL UTILITIES.

2. AREA ADJACENT TO L.O.W. SHOWN FOR REFERENCE ONLY, N.I.C.

3. ALL PAVED AREAS SHALL HAVE A MIN. CROSS SLOPE OF 1.0% AND MAX. CROSS SLOPE OF 1.9% UNLESS OTHERWISE INDICATED.

4. ALL LANDSCAPE PLANTING SHALL BE IRRIGATED WITH LOW FLOW IRRIGATION SYSTEM AND SHALL COMPLY WITH MODEL WATER EFFICIENT LANDSCAPE ORDINANCE (MWELO) IN EFFECT.

5. SEE ELECTRICAL DRAWINGS FOR LIGHTING LAYOUT.

6. TOTAL OF 114 PROPOSED BICYCLE PARKING RACKS PROVIDED.

LEGEND

SYMBOL	DESCRIPTION
	DECORATIVE GRAVEL
	UNIT PAVER WITH OPEN JOINTS
	UNIT PAVERS - SEE KEYNOTES FOR TYPE
	UNIT PAVERS - DISCOVERY WALK
	PLANTING
	DG STONE FINES
	BARK MULCH
	TURF BLOCK
P.D.	PLANTER DRAIN / INSPECTION
A.D.	AREA DRAIN
S.D.	SLOT DRAIN
EXL	(E) LANTERN STYLE POLE LIGHT
EXL (R)	RELOCATED (E) LANTERN STYLE POLE LIGHT
GP	GLOBE POLE LIGHT
AP	AREA POLE LIGHT
BL	BOLLARD LIGHT
EL	EVENT POLE LIGHT

TREE LEGEND

SYMBOL	LABEL	QTY
#XX	EXISTING TREE, TO BE PROTECTED	4
	PROPOSED MITIGATION TREE	9
	PROPOSED TREE	9

MATERIAL KEY NOTES

FURNISHINGS	
F1	BENCH TYPE 1
F2	BENCH TYPE 2
F3	MOVABLE TABLE AND CHAIRS
F4	BENCH TYPE 4 - TWO-SIDED
F5	BICYCLE RACK
F6	TRASH/RECYCLING RECEPTACLE
F7	CAFE TRASH/RECYCLING RECEPTACLE
F8	TEMPORARY BICYCLE RACK
F9	BOLLARDS
F10	SLOT DRAIN
F11	ADIRONDACK LOUNGE CHAIR
F12	HANDRAIL
F13	GUARDRAIL, S.A.D.
F14	FENCE WITH GATE
F15	SALVAGED TREE FEATURE
F16	RAISED METAL EDGE / PLANTER
F17	VINE SCREEN
F18	EXISTING VINE SCREEN TO BE PROTECTED
F19	SALVAGED TREE SEAT
PAVING	
P1	PAVER - TYPE 1: ENTRY & EAST PLAZA
P2	PAVER - TYPE 2: ENTRY & EAST PLAZA
P3	PAVER - TYPE 3: ENTRY & EAST PLAZA
P4	PAVER - TYPE 4: DISCOVERY WALK
P5	PAVER - TYPE 5: SKY GARDEN
P6	VEHICULAR CONCRETE PAVEMENT
P7	CIP CONC PAVEMENT - INTEGRAL COLOR
P8	ASPHALT PAVING. S.C.D
P9	DECORATIVE GRAVEL SURFACE
P10	ORGANIC BARK MULCH
P11	METAL EDGE
P12	TURF BLOCK, S.C.D
P13	WOOD OR COMPOSITE HEADER
P14	PAVER - TYPE 6: ENTRY & EAST PLAZA
P15	PAVER - TYPE 7: SKY GARDEN
P16	CIP CONC PAVEMENT - INTEGRAL COLOR
P17	CONCRETE HEADER
WALLS / CURBS / FEATURES	
C1	CIP CONC. STEPS
C2	CIP CONC. RETAINING WALL

1" = 30'-0" SCALE: 0 5 10 15 30 60

Sheet Size: 24 x 36 | 0" | 1" | 2" | 4/22/2025 4:54:51 PM

ZGF
ZIMMER GUNSUL FRASCA ARCHITECTS LLP

DENVER
LOS ANGELES
NEW YORK
PORTLAND
SEATTLE
WASHINGTON, DC
VANCOUVER, BC

1223 SW Washington Street
Suite 200
Portland, OR 97205
503.224.3860
www.zgf.com

ZGF Project Number P26717.wrss

Consultant

INTERSTICE ARCHITECTS
ARCHITECTURE URBAN DESIGN
LANDSCAPE ARCHITECTURE
www.intersticearchitects.com
1173 Sutter Street, San Francisco
415.285.3960 CA 94109

Full Design Team Roster on Cover Sheet

Client and Project Information

Stanford MEDICINE

1215 WELCH RD.

STANFORD UNIVERSITY
SCHOOL OF MEDICINE

Original Issue
ASA SUBMITTAL 12.06.2024

Revisions
RESUBMITTAL 02.28.2025
RESUBMITTAL 2 04.22.2025

Key Plan and Orientation

Sheet Status

Sheet Title
LANDSCAPE PLAN
PHASE B

Sheet Number
ASA-L2.00B

Current Issue
ASA SUBMITTAL

Current Issue Date
12.06.2024

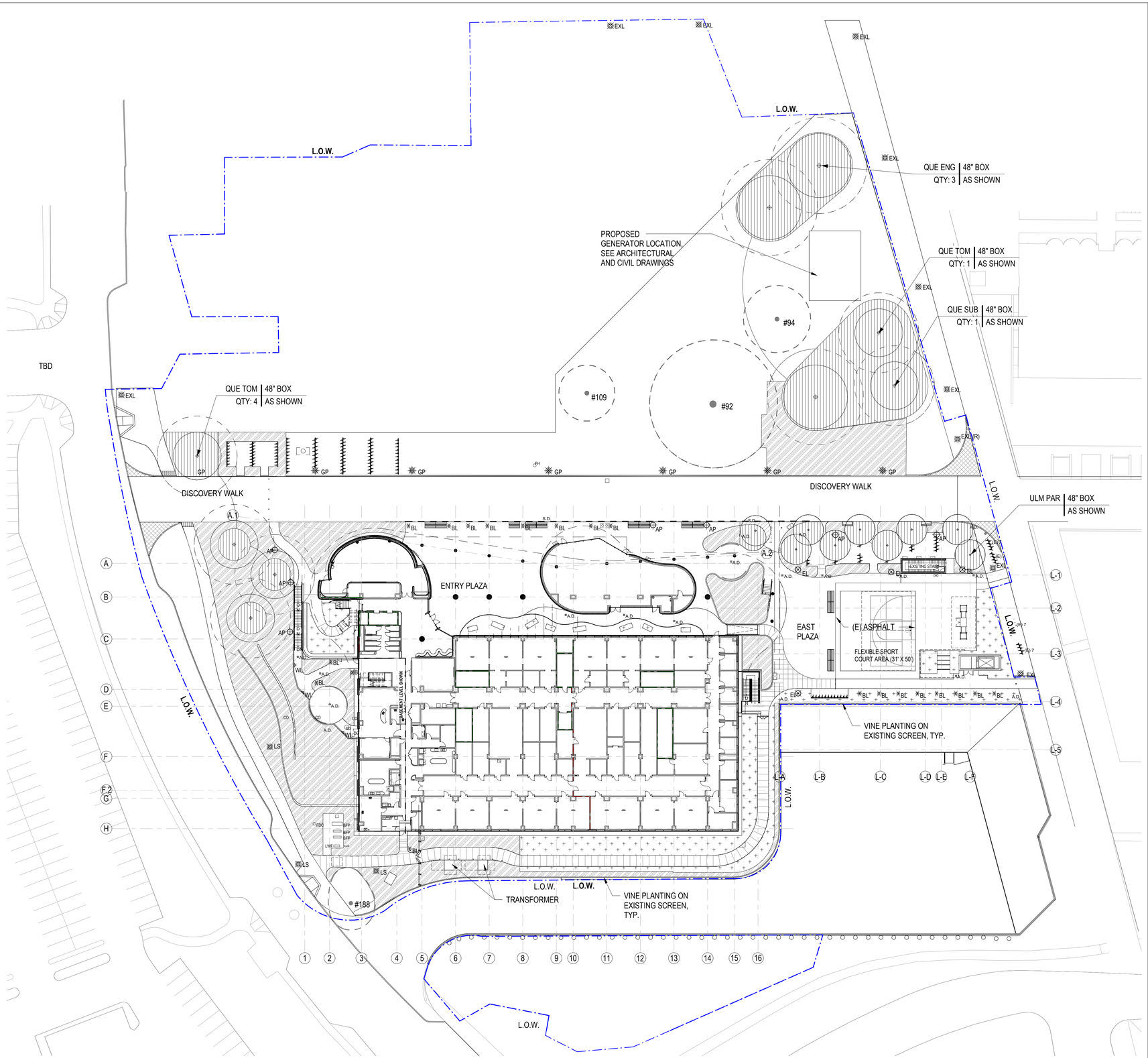

1 LANDSCAPE SOIL AND TREE PLAN
1" = 30'-0"

SHEET NOTES

1. ALL PLANTING AREAS, TYPICAL MIN. SOIL DEPTH 24"; AT PROPOSED TREES, MIN. 42" DEPTH, EXTENDING 10' DIAMETER FROM TRUNK IN ALL DIRECTIONS; SHRUB AND VINE PLANTING AREAS SOIL DEPTH 36" MIN.; TURF PLANTING AREAS SOIL DEPTH 24" MIN. ALL DEPTHS AND EXTENTS ARE TYPICAL UNLESS OTHERWISE NOTED.

2. PROVIDE STAKED LAYOUT OF ALL PLANT LOCATIONS FOR REVIEW BY LANDSACPE ARCHITECT PRIOR TO PLANTING.

3. SEE CIVIL DRAWINGS FOR ALL UTILITIES AND CONNECTIONS OF SUBDRAINAGE LINES TO STORM SEWER LINES.

4. SEE CIVIL DRAWINGS FOR SIZE AND DETAILS FOR SUB-DRAINAGE LINES.

5. SOIL VOLUME FOR ALL TREES SHALL BE MIN. 600 CU FT AND OPTIMALLY 800 CU FT PER TREE.

6. SEE SPECIFICATIONS FOR DRAINAGE REQUIREMENTS FOR TREES; ENSURE THAT ALL TREE WELLS ARE FREE DRAINING PRIOR TO INSTALLING TREES.

7. FOR PROPOSED MITIGATION TREE LOCATIONS IN THE FOOTPRINT OF THE HAGEY BUILDING, SOILS WILL BE AMENDED TO PROVIDE OPTIMAL GROWING CONDITIONS.

LEGEND

SYMBOL	DESCRIPTION
	DECORATIVE GRAVEL
	UNIT PAVER WITH OPEN JOINTS
	UNIT PAVERS - SEE KEYNOTES FOR TYPE
	UNIT PAVERS - DISCOVERY WALK
	PLANTING
	DG STONE FINES
	BARK MULCH
	TURF BLOCK
P.D.	PLANTER DRAIN / INSPECTION
A.D.	AREA DRAIN
S.D.	SLOT DRAIN
EXL	(E) LANTERN STYLE POLE LIGHT
EXL (R)	RELOCATED (E) LANTERN STYLE POLE LIGHT
GP	GLOBE POLE LIGHT
AP	AREA POLE LIGHT
BL	BOLLARD LIGHT
EL	EVENT POLE LIGHT

SOIL DEPTH LEGEND

SYMBOL	DESCRIPTION
	SOIL CELL W/ PLANTING SOIL
	TREE PLANTING DEPTH 42" DEPTH
	SHRUBS/VINES PLANTING DEPTH 36" DEPTH
	TYPICAL PLANTING DEPTH 24" DEPTH

TREE LEGEND

SYMBOL	LABEL	QTY
#XX	EXISTING TREE, TO BE PROTECTED	4
	PROPOSED TREE	18

1" = 30'-0" SCALE: 0 5 10 15 30 60

ZGF
ZIMMER GUNSUL FRASCA ARCHITECTS LLP

DENVER
LOS ANGELES
NEW YORK
PORTLAND
SEATTLE
WASHINGTON, DC
VANCOUVER, BC

1223 SW Washington Street
Suite 200
Portland, OR 97205
503.224.3860
www.zgf.com

ZGF Project Number P26717.wrss

Consultant

INTERSTICE ARCHITECTS
ARCHITECTURE URBAN DESIGN
LANDSCAPE ARCHITECTURE
www.intersticearchitects.com
1173 Sutter Street, San Francisco
415.285.3960 CA 94109

Full Design Team Roster on Cover Sheet

Client and Project Information

Stanford MEDICINE

1215 WELCH RD.

STANFORD UNIVERSITY
SCHOOL OF MEDICINE

Original Issue
ASA SUBMITTAL 12.06.2024

Revisions
RESUBMITTAL 02.28.2025
RESUBMITTAL 2 04.22.2025

Key Plan and Orientation

Sheet Status

Sheet Title
LANDSCAPE SOIL & TREE PLAN

Sheet Number
ASA-L2.10

Current Issue
ASA SUBMITTAL

Current Issue Date
12.06.2024

Sheet Size: 24 x 36 | 0" | 1" | 2" | 4/22/2025 4:54:53 PM

LARGE SHRUBS / SMALL TREES LEGEND		SHRUBS / GROUNDCOVERS / PERENNIALS / VINES SYMBOLS LEGEND											
SYMBOL	LABEL	SYMBOL	LABEL	SYMBOL	LABEL	SYMBOL	LABEL	SYMBOL	LABEL	SYMBOL	LABEL	SYMBOL	LABEL
	ARC DRH		ACA MOL		CEA CON		CYR FAL		FRA MSB		NAN DOM		RUM ADI
	ARC STH		ARC HMM		CEA GLO		DIS BUC		GEL SEM		NEP COR		SAL CLE
	CER OCC1		ARC HOO		CEA JUL		EPI CAN		HEU MAX		PIT TOB		SAR RUS
	CER OCC2		ASP DEN		CEA SKY		FIC PUM		JAS POL		POL STI		WOO FIM
	HET ARB		BAC PUL		CYC REV		FRA LEA		LOM BRE		RIB VIB		

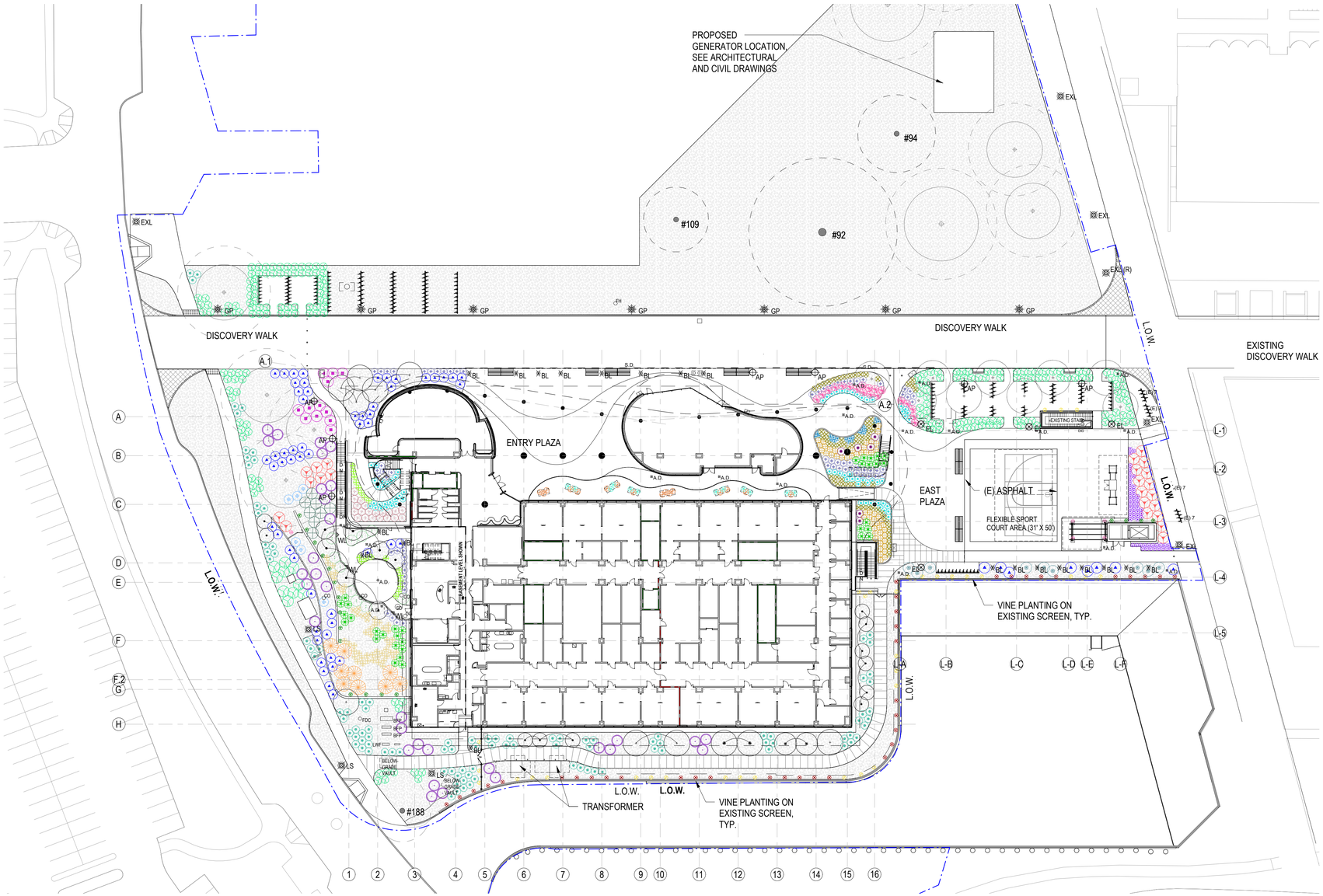

1 LANDSCAPE PLANTING PLAN
1" = 30'-0"

PLANTING SHEET NOTES

1. AREA ADJACENT TO L.O.W. SHOWN FOR REFERENCE ONLY, N.I.C.
2. PROVIDE STAKED LAYOUT OF ALL PLANT LOCATIONS FOR REVIEW BY LANDSCAPE ARCHITECT PRIOR TO PLANTING.
3. SEE CIVIL DRAWINGS FOR ALL UTILITIES AND CONNECTIONS OF SUBDRAINAGE LINES TO STORM SEWER LINES.
4. SEE CIVIL DRAWINGS FOR SIZE AND DETAILS FOR SUB-DRAINAGE LINES.
5. ALL PLANTING AREAS SHALL BE FINISHED WITH BARK MULCH UNLESS INDICATED OTHERWISE.
6. SEE SHEET ASA-L2.10 FOR SOIL REQUIRED DEPTHS AND TREE PLANTING PLAN
7. SEE SHEET ASA-L0.10 FOR ALL PLANT SPECIES AND QUANTITIES.

TREE LEGEND		
SYMBOL	LABEL	QTY
#XX	EXISTING TREE. TO BE PROTECTED	4
	PROPOSED TREE	18

PLANTING LEGEND	
SYMBOL	DESCRIPTION
	DECORATIVE GRAVEL
	BARK MULCH
	TURF BLOCK
P.D.	PLANTER DRAIN / INSPECTION
A.D.	AREA DRAIN
S.D.	SLOT DRAIN
R	EXTERIOR ELEC.RECEPTACLE
EXL	(E) LANTERN STYLE POLE LIGHT
EXL (R)	RELOCATED (E) LANTERN STYLE POLE LIGHT
GP	GLOBE POLE LIGHT
AP	AREA POLE LIGHT
BL	BOLLARD LIGHT
EL	EVENT POLE LIGHT

1" = 30'-0" SCALE: 0 5 10 15 30 60

ZGF
ZIMMER GUNSUL FRASCA ARCHITECTS LLP

DENVER
LOS ANGELES
NEW YORK
PORTLAND
SEATTLE
WASHINGTON, DC
VANCOUVER, BC

1223 SW Washington Street
Suite 200
Portland, OR 97205
503.224.3860
www.zgf.com

ZGF Project Number P26717.wrss

Consultant

INTERSTICE ARCHITECTS
ARCHITECTURE URBAN DESIGN
LANDSCAPE ARCHITECTURE
www.intersticearchitects.com
1173 Sutter Street, San Francisco
415.285.3960 CA 94109

Full Design Team Roster on Cover Sheet

Client and Project Information

Stanford MEDICINE

1215 WELCH RD.

STANFORD UNIVERSITY
SCHOOL OF MEDICINE

Original Issue
ASA SUBMITTAL 12.06.2024

Revisions
RESUBMITTAL 02.28.2025
RESUBMITTAL 2 04.22.2025

Key Plan and Orientation

Sheet Status

Sheet Title
LANDSCAPE UNDERSTORY PLANTING PLAN

Sheet Number
ASA-L2.20

Current Issue
ASA SUBMITTAL

Current Issue Date
12.06.2024

Sheet Size: 24 x 36 | 0" | 1" | 2" | 4/22/2025 4:54:56 PM

IRRIGATION NOTES

1. THE CONTRACTOR SHALL REVIEW RELATED DRAWINGS AND SHALL ENSURE COORDINATION WITH ALL APPLICABLE TRADES PRIOR TO SUBMITTING BID.

2. THE IRRIGATION SYSTEM SHALL BE INSTALLED IN CONFORMANCE WITH ALL APPLICABLE STATE AND LOCAL CODES AND ORDINANCES BY LICENSED CONTRACTORS AND EXPERIENCED WORKMEN. CONTRACTOR SHALL OBTAIN AND PAY FOR ALL REQUIRED PERMITS AND FEES RELATING TO HIS WORK.

3. THIS DESIGN IS DIAGRAMMATIC. ALL PIPING, VALVES, ETC. SHOWN WITHIN PAVED AREAS IS FOR DESIGN CLARIFICATION ONLY AND SHALL BE INSTALLED IN PLANTING AREAS WHERE POSSIBLE. AVOID ANY CONFLICTS BETWEEN THE SPRINKLER SYSTEM, PLANTING AND ARCHITECTURAL FEATURES. PARALLEL PIPES MAY BE INSTALLED IN COMMON TRENCH. PIPES ARE NOT TO BE INSTALLED DIRECTLY ABOVE ONE ANOTHER.

4. DO NOT WILLFULLY INSTALL THE SPRINKLER SYSTEM AS SHOWN ON THE DRAWINGS WHEN IT IS OBVIOUS IN THE FIELD THAT OBSTRUCTIONS, GRADE DIFFERENCES OR DIFFERENCES IN THE AREA DIMENSIONS EXIST THAT MIGHT NOT HAVE BEEN CONSIDERED IN THE ENGINEERING. SUCH OBSTRUCTIONS OR DIFFERENCES SHOULD BE BROUGHT TO THE ATTENTION OF THE OWNER'S AUTHORIZED REPRESENTATIVE. IN THE EVENT THAT THIS NOTIFICATION IS NOT PERFORMED, THE IRRIGATION CONTRACTOR SHALL ASSUME FULL RESPONSIBILITY FOR ANY REVISIONS NECESSARY.

5. IT IS THE RESPONSIBILITY OF THE IRRIGATION CONTRACTOR TO FAMILIARIZE HIMSELF WITH ALL GRADE DIFFERENCES, LOCATION OF WALLS, RETAINING WALLS, ETC. HE SHALL COORDINATE HIS WORK WITH THE GENERAL CONTRACTOR AND OTHER SUBCONTRACTORS FOR THE LOCATION AND THE INSTALLATION OF PIPE SLEEVES THROUGH WALLS, UNDER ROADWAYS, PAVING, STRUCTURES, ETC. CONTRACTOR TO VERIFY THE LOCATION OF EXISTING UNDERGROUND UTILITIES AND STRUCTURES PRIOR TO THE EXCAVATION OF TRENCHES. CONTRACTOR IS TO REPAIR ANY DAMAGE CAUSED BY HIS WORK AT NO ADDITIONAL COST TO THE OWNER.

6. DUE TO THE SCALE OF THE DRAWINGS, IT IS NOT POSSIBLE TO INDICATE ALL OFFSETS, FITTINGS, SLEEVES, ETC., WHICH MAY BE REQUIRED. THE CONTRACTOR SHALL CAREFULLY INVESTIGATE THE STRUCTURAL AND FINISHED CONDITIONS AFFECTING ALL OF HIS WORK AND PLAN HIS WORK ACCORDINGLY, FURNISHING SUCH FITTINGS, ETC., AS MAY BE REQUIRED TO MEET SUCH CONDITIONS. DRAWINGS ARE GENERALLY DIAGRAMMATIC AND INDICATIVE OF THE WORK TO BE INSTALLED. THE WORK SHALL BE INSTALLED IN SUCH A MANNER AS TO AVOID CONFLICTS BETWEEN IRRIGATION SYSTEMS, PLANTING, AND ARCHITECTURAL FEATURES.

7. ELECTRICAL CONTRACTOR TO SUPPLY 120 VAC (2.5 AMP) SERVICE TO CONTROLLER LOCATION. IRRIGATION CONTRACTOR TO MAKE FINAL CONNECTION FROM ELECTRICAL STUB-OUT TO CONTROLLER. IRRIGATION CONTROL WIRE SHALL BE #14, U.L. APPROVED FOR DIRECT BURIAL. COMMON WIRE SHALL BE #12 U.L. APPROVED AND SHALL BE WHITE IN COLOR. WIRING TO INDIVIDUAL REMOTE CONTROL VALVES SHALL BE COLOR OTHER THAN WHITE.

8. EACH CONTROLLER SHALL HAVE ITS OWN INDEPENDENT GROUND WIRE.

9. REMOTE CONTROL VALVES SHALL BE WIRED TO CONTROLLER IN SEQUENCE AS SHOWN ON PLANS. RUN WIRE FROM EACH RCV TO THE CONTROLLER. SPLICING WIRES TOGETHER OUTSIDE OF VALVE BOXES WILL NOT BE PERMITTED.

10. SPLICING OF 24-VOLT WIRES WILL NOT BE PERMITTED EXCEPT IN VALVE BOXES. LEAVE A 36" COIL OF EXCESS WIRE AT EACH SPLICE AND 100 FEET ON CENTER ALONG WIRE RUN. TAPE WIRE IN BUNDLES 10 FEET ON CENTER. NO TAPING PERMITTED INSIDE SLEEVES.

11. INSTALL ONE (1) SPARE CONTROL WIRE FOR EVERY 6 (SIX) STATIONS ON THE CONTROLLER ALONG THE ENTIRE MAIN LINE. SPARE WIRES SHALL BE THE SAME COLOR (ONE WITH A WHITE STRIPE) AND OF A DIFFERENT COLOR THAN OTHER CONTROL WIRES. LOOP 36" EXCESS WIRE INTO EACH SINGLE VALVE BOX AND INTO ONE VALVE BOX IN EACH GROUP OF VALVES.

12. VALVE LOCATIONS SHOWN ARE DIAGRAMMATIC. INSTALL IN GROUND COVER/SHRUB AREAS WHERE POSSIBLE (NOT IN LAWN AREA.) ACTUAL LOCATIONS OF VALVE BOXES SHALL BE APPROVED PRIOR TO INSTALLATION BY THE STANFORD UNIVERSITY ARCHITECT AND PLANNING OFFICE.

13. INSTALL VALVE BOXES MINIMUM 12" FROM AND PERPENDICULAR TO WALK, CURB, BUILDING OR LANDSCAPE FEATURE. AT MULTIPLE VALVE BOX GROUPS, EACH BOX SHALL BE AN EQUAL DISTANCE FROM THE WALK, CURB, ETC. AND EACH BOX SHALL BE MINIMUM 12" APART. SHORT SIDE OF VALVE BOXES SHALL BE PARALLEL TO WALK, CURB, ETC.

14. LOCATE QUICK COUPLING VALVE 12" FROM HARDSCAPE AREA.

15. LOCATION OF ALL ABOVE GROUND UTILITIES/BOXES (INCLUDING FILTER ENCLOSURE) MUST BE APPROVED PRIOR TO INSTALLATION BY THE STANFORD UNIVERSITY ARCHITECT AND PLANNING OFFICE. ALL BOXES SHALL BE PAINTED BLACK.

16. ALL SPRINKLER HEADS SHALL BE SET PERPENDICULAR TO FINISH GRADE OF THE AREA TO BE IRRIGATED UNLESS OTHERWISE DESIGNATED ON THE PLANS.

17. THE IRRIGATION CONTRACTOR SHALL FLUSH AND ADJUST ALL SPRINKLER HEADS FOR OPTIMUM PERFORMANCE AND TO PREVENT OVERSPRAY ONTO WALKS, ROADWAYS AND/OR BUILDINGS AS MUCH AS POSSIBLE. THIS SHALL INCLUDE SELECTING THE BEST DEGREE OF FIXED ARC (OR AN ADJUSTABLE ARC IF FIXED ARC DOES NOT MATCH THE ARC TO BE IRRIGATED) TO FIT THE SITE CONDITIONS AND TO THROTTLE THE FLOW CONTROL AT EACH VALVE TO OBTAIN THE OPTIMUM OPERATING PRESSURE FOR EACH SYSTEM. ALL MAIN LINES SHALL BE FLUSHED PRIOR TO THE INSTALLATION OF IRRIGATION HEADS. AT 30 DAYS AFTER INSTALLATION EACH SYSTEM SHALL BE FLUSHED TO ELIMINATE GLUE AND DIRT PARTICLES FROM THE LINES.

18. WHEN VERTICAL OBSTRUCTIONS (STREET LIGHTS, TREES, FIRE HYDRANTS, ETC.) INTERFERE WITH THE SPRAY PATTERN OF THE HEADS SO AS TO PREVENT PROPER COVERAGE, THE IRRIGATION CONTRACTOR SHALL FIELD ADJUST THE SPRINKLER SYSTEM BY INSTALLING A QUARTER, THIRD OR HALF CIRCLE HEAD AT THE SIDES OF THE OBSTRUCTION SO AS TO PROVIDE PROPER COVERAGE. ALL ADJUSTMENTS SHALL BE MADE AT NO ADDITIONAL COST TO THE OWNER.

19. NOTIFY ARCHITECT OF ANY ASPECTS OF LAYOUT THAT WILL PROVIDE INCOMPLETE OR INSUFFICIENT WATER COVERAGE OF PLANT MATERIAL AND DO NOT PROCEED UNTIL HIS INSTRUCTIONS ARE OBTAINED.

20. LOCATE BUBBLERS ON UPHILL SIDE OF TREES. TREE BUBBLERS ARE FOR ESTABLISHMENT AND DROUGHT CONDITIONS. THEY ARE TO BE TURNED OFF AFTER TREES ARE ESTABLISHED AND TURNED ON DURING DROUGHT CONDITIONS.

21. IN ADDITION TO THE SLEEVES AND CONDUITS SHOWN ON THE DRAWINGS, THE IRRIGATION CONTRACTOR SHALL BE RESPONSIBLE FOR THE INSTALLATION OF SLEEVES AND CONDUITS OF SUFFICIENT SIZE UNDER ALL PAVED AREAS.

22. ALL EXCAVATIONS ARE TO BE FILLED WITH COMPACTED BACKFILL. CONTRACTOR TO REPAIR ALL SETTLED TRENCHES PROMPTLY, FOR A PERIOD OF 1 YEAR AFTER COMPLETION OF WORK.

23. CONTRACTOR SHALL WARRANT THAT THE IRRIGATION SYSTEM WILL BE FREE FROM DEFECTS IN MATERIALS AND WORKMANSHIP FOR A PERIOD OF 1 YEAR AFTER FINAL ACCEPTANCE OF WORK.

24. WHERE IT IS NECESSARY TO EXCAVATE ADJACENT TO EXISTING TREES, THE CONTRACTOR SHALL USE ALL POSSIBLE CARE TO AVOID INJURY TO TREES, AND TREE ROOTS. EXCAVATION IN AREAS WHERE 2 INCH AND LARGER ROOTS OCCUR SHALL BE DONE BY HAND. ROOTS 2 INCHES AND LARGER IN DIAMETER SHALL BE WRAPPED IN A PLASTIC BAG AND SECURED WITH A RUBBER BAND. TRENCHES ADJACENT TO TREE SHOULD BE CLOSED WITHIN 24 HOURS; WHERE THIS IS NOT POSSIBLE, THE SIDE OF THE TRENCH ADJACENT TO THE TREE SHALL BE KEPT SHADED WITH BURLAP OR CANVAS.

25. THE SPRINKLER SYSTEM DESIGN IS BASED ON THE MINIMUM OPERATING PRESSURE SHOWN ON THE IRRIGATION DRAWINGS. THE IRRIGATION CONTRACTOR SHALL VERIFY WATER PRESSURE PRIOR TO CONSTRUCTION. REPORT ANY DIFFERENCE BETWEEN THE WATER PRESSURE INDICATED ON THE DRAWINGS AND THE ACTUAL PRESSURE READING AT THE IRRIGATION POINT OF CONNECTION TO THE OWNER'S AUTHORIZED REPRESENTATIVE.

26. IRRIGATION DEMAND: REFER TO IRRIGATION POINTS OF CONNECTION.

27. CONNECT FLOW SENSOR TO CONTROLLER WITH MANUFACTURER APPROVED DIRECT BURIAL SHIELDED CABLE. INSTALL CABLE IN A SEPARATE 1" PVC SCHEDULE 40 CONDUIT.

28. RAIN BIRD MAXICOM CONTROLLER ENCLOSURE ASSEMBLIES MUST BE APPROVED BY RAIN BIRD SERVICES CORP. PRIOR TO FINAL APPROVAL OF IRRIGATION. CONTACT MIKE VALENTINE (925-518-5803) FOR PRE-CONSTRUCTION MEETING AND CERTIFICATION REQUIREMENTS.

29. OPERATE IRRIGATION CONTROLLER(S) BETWEEN THE HOURS OF 10:00 PM AND 7:00 AM.

30. INSTALL FILTERATION UNIT PRIOR TO ORDERING ENCLOSURE. ORDER ENCLOSURE WITH APPROPRIATE INSIDE DIMENSIONS TO HOUSE INSTALLED FILTRATION UNIT.

31. THE CONTRACTOR SHALL NOTIFY UNDERGROUND SERVICE ALERT AT 811 48 HOURS PRIOR TO ANY EXCAVATION.

32. ALL COPIES OF IRRIGATION INVOICES FOR ALL RAIN BIRD PRODUCTS USED IN THIS PROJECT TO BE RETAINED AND SUBMITTED TO GROUNDS SERVICES.

DRIPLINE NOTES:

1. PLANS ARE DIAGRAMMATIC. INSTALL DRIPLINE AND COMPONENTS PER MANUFACTURERS INSTRUCTIONS AND INSTALLATION DETAILS.

2. INSTALL DRIPLINE A MAXIMUM OF 12" APART WITH EMITTERS TRIANGULARLY SPACED. INSTALL 4" FROM PERIMETER OF PLANTED AREA. THERE SHOULD BE A MINIMUM OF TWO DRIPLINE LATERALS IN EACH PLANTED AREA. DRIPLINE SHALL BE INSTALLED ON TOP OF FINISH GRADE AND UNDER 4" OF MULCH. STAPLE TO GROUND EVERY 36".

3. PLACE FLUSH VALVES AT BOTH ENDS OF THE FLUSH MANIFOLD OR AT LOW POINT ON SLOPES. LOCATE WITHIN 3' OF OPERATION INDICATOR.

4. INSTALL IN-LINE CHECK VALVES FOR EVERY 10' OF ELEVATION CHANGE.

5. ON ALL SLOPES AND MOUNDS, PLACE THE DRIPLINE LATERALS PARALLEL TO THE SLOPE CONTOUR. INCREASE THE LATERAL SPACING BY 25% ON THE LOWER ONE-THIRD OF THE SLOPE TO AVOID EXCESS DRAINAGE.

6. PVC SUPPLY AND FLUSH LINE SIZING GUIDE (ALL SUPPLY AND FLUSH LINES SHALL BE THE SAME SIZE FOR THE ENTIRE ZONE):
   - 0-5 GPM - 3/4"
   - 5.1-10 GPM - 1"
   - 10.1-20 GPM - 11/4"

8. FITTINGS SHALL BE OF THE SAME MANUFACTURER AS DRIPLINE.

9. ADD A PRESSURE REGULATOR AND FILTER TO DRIPLINE VALVES AS SHOWN ON REMOTE CONTROL VALVE DETAIL.

10. THOROUGHLY FLUSH EACH INSTALLATION SEGMENT TO ENSURE NO DEBRIS CONTAMINATION OCCURS.

CITY OF
PALO ALTO
LANDSCAPE WATER USE STATEMENT

PROJECT NAME: **1215 WELCH ROAD**
PROJECT ADDRESS: 1215 WELCH ROAD, STANFORD

PREPARED BY: JANET LUEHRS (CID, CLIA #43274)
BROOKWATER INC., IRRIGATION CONSULTANTS
480 SAINT JOHN STREET, SUITE 220
PLEASANTON, CA 94566
925-855-0417
925-855-0357 (FAX)
Janet@Brookwater.com (e-mail)

"I have complied with the criteria of the Water Efficient Landscape Ordinance and applied them accordingly for the efficient use of water in the irrigation design plan."

Signed: Janet Luehrs

PART ONE	MAXIMUM APPLIED WATER ALLOWANCE (MAWA)	
		MAWA = ETo x .62 x [(ETAFx HA) + ((1-ETAF) x SLA)]
	YEARLY ETo	43.1
	CONVERSION FACTOR	0.62
	ETAF	0.45
	TOTAL IRRIGATED LANDSCAPE AREA (HA)	40,248 SQUARE FEET
	SPECIAL LANDSCAPE AREA (SLA)	0 SQUARE FEET
	LANDSCAPE WATER ALLOWANCE	**483,978 GALLONS PER YEAR**
	TOTAL ACRE FEET	1.49 ACRE FEET

PART TWO	ESTIMATED TOTAL WATER USE (ETWU)	
		(AVERAGE *ETAF* AND *ETWU* FROM WATER EFFICIENT LANDSCAPE WORKSHEET)
	AVERAGE ETAF FOR REGULAR LANDSCAPE AREAS (TOTAL ETAF x AREA / TOTAL AREA)	0.37
	ETWU FOR REGULAR LANDSCAPE AREAS	**397,340 GALLONS PER YEAR**
	SITE WIDE ETAF	0.37
	ETWU FOR ALL LANDSCAPE AREAS	**397,340 GALLONS PER YEAR**
	TOTAL ACRE FEET	1.22 ACRE FEET

IRRIGATION LEGEND

SYMBOL	MODEL NUMBER	DESCRIPTION	PSI	GPM	MAX. RADIUS	MAX. SPACING
▲	1401	RAIN BIRD PRESS. COMP. BUBBLER - SHRUBS INSTALL ONE BUBBLER PER SHRUB	30	.25	-	-
■	1404	RAIN BIRD PRESS. COMP. BUBBLER - TREES INSTALL TWO BUBBLERS PER TREE	30	1.0	-	-
△	OMNI TYPE 27	ASAHI PVC BALL VALVE FOR MANUAL FLUSHING				
◘	OPERIND	RAIN BIRD OPERATION INDICATOR				
◉	PESB SERIES / TYPE 21	RAIN BIRD REMOTE CONTROL VALVE WITH ASAHI UNION BALL VALVE				
◉	XCZ-100-PRB-COM / TYPE 21	RAIN BIRD CONTROL ZONE KIT (INCL. PESB REMOTE CONTROL VALVE AND QUICK CHECK BASKET FILTER/REGULATOR) WITH ASAHI UNION BALL VALVE				
◆	44LRC	RAIN BIRD QUICK COUPLING VALVE				
⋈	T-113IRR	NIBCO GATE VALVE - 2" AND SMALLER (LINE SIZE)				
⊠	3-9226-2151-1000/ 13-9303-1020 / 82-31-4020-9000 / BF-SPL	AMIAD 2" TAF AUTOMATIC FILTER WITH 200 MICRON STAINLESS STEEL SCREEN (BATTERY POWERED), 2" TAF DOWNSTREAM VALVE KIT, LEMEUR ENCLOSURE (PAINTED BLACK)				
⊞	3100200	SUPERIOR MASTER REMOTE CONTROL VALVE				
⊠	FS200P	RAIN BIRD FLOW SENSOR				
R	WRC-RC	RAIN BIRD WIRELESS RAIN SENSOR				
ⓒ	ISA6-RB2-40/ETH-SE/RRC+RRC/RSE/SP	RAIN BIRD MAXICOM CENTRAL CONTROL SYSTEM WITH STAINLESS STEEL FLIP TOP PEDESTAL ENCLOSURE, REMOTE CONTROL AND ETHERNET COMMUNICATIONS TO CENTRAL COMPUTER, ESP40SATLW CONTROLLER, RAIN SENSOR, SURGE PROTECTION, AND TWO 33 STATION REMOTE RECEIVERS.				
		*CONTACT RAIN BIRD REPRESENTATIVE (CONTACT IMPERIAL TECHNICAL SERVICES OFFICE (925) 667-2190 OR MIKE VALENTINE (925) 518-5803 FOR IRRIGATION CONTROLLER SPECIFICATIONS..				
C-1 1.6 1" 15 30		CONTROLLER AND STATION NUMBER APPLICATION RATE (INCHES) OPERATING PRESSURE (PSI) OR AIR RELIEF VALVE QUANTITY APPROXIMATE GALLONS PER MINUTE REMOTE CONTROL VALVE SIZE				
		MAIN LINE: 1120-SCHEDULE 40 PVC SOLVENT WELD PIPE WITH SCHEDULE 80 AND SCHEDULE 40 PVC SOLVENT WELD FITTINGS. 18" COVER.				
		LATERAL LINE: 1120-SCHEDULE 40 PVC SOLVENT WELD PIPE WITH SCHEDULE 40 PVC SOLVENT WELD FITTINGS. 12" COVER.				
		SUB-SURFACE DRIPLINE: RAIN BIRD XFS-09-12 WITH COPPER SHIELD. INSTALL 2" BELOW GRADE. USE ONLY RAINBIRD DRIPLINE FITTINGS. EMITTER SPACING = 12"; EMITTER FLOW RATE = .9 GPH; 18" LINE SPACING.				
		SUB-SURFACE DRIPLINE: RAIN BIRD XFS-09-12 WITH COPPER SHIELD. INSTALL 2" BELOW GRADE. USE ONLY RAINBIRD DRIPLINE FITTINGS. EMITTER SPACING = 12"; EMITTER FLOW RATE = .9 GPH; 12" LINE SPACING.				
		SLEEVE (SL): 1120-SCHEDULE 40 PVC PLASTIC PIPE. 24" COVER. SLEEVES SHOWN WHERE MAINLINE CROSSES PAVING SHALL HAVE TWO SLEEVES (ONE 6" AND ONE 4".) ALL OTHER SLEEVES SHALL BE 4".				

1215 WELCH ROAD
WATER EFFICIENT LANDSCAPE WORKSHEET

Reference Evapotranspiration (Eto) **43.1**

ZONE NO.	PLANT TYPE	HYDROZONE* (PLANT WATER USE)	PLANT FACTOR (PF)	IRRIGATION METHOD**	IRRIGATION EFFICIENCY (IE)	ETAF (PF/IE)	HYDROZONE AREA (HA) (Sq Ft)	ETAF x HA	ESTIMATED TOTAL WATER USE (ETWU)	% LANDSCAPE AREA
REGULAR LANDSCAPE AREA										
C-1	TREE	LW	0.30	B	0.81	0.37	17,672	6,545	174,900	43.9%
C-2	TREE	LW	0.30	B	0.81	0.37	8,847	3,277	87,559	22.0%
C-3	TREE	VLW	0.20	B	0.81	0.25	2,552	630	16,838	6.3%
C-4	SHRUBS	MW	0.50	B	0.81	0.62	980	605	16,165	2.4%
C-5	SHRUB	LW	0.30	DL	0.81	0.37	2,635	976	26,079	6.5%
C-6	SHRUBS-SHD	LW	0.30	DL	0.81	0.37	1,998	740	19,774	5.0%
C-7	SHRUBS	LW	0.30	B	0.81	0.37	5,353	1,983	52,979	13.3%
C-8	VINES	MW	0.50	B	0.81	0.62	145	90	2,392	0.4%
C-9	VINES	LW	0.30	B	0.81	0.37	66	24	653	0.2%
TOTALS (REGULAR LANDSCAPE AREAS)							**40,248**	**14,869**	**397,340**	**100.0%**
SPECIAL LANDSCAPE AREA										
	0			0		1.00	0	0	0	0.0%
TOTALS (SPECIAL LANDSCAPE AREAS)							**0**	**0**	**0**	**0.0%**
TOTALS FOR ALL AREAS							***40,248***	***14,869***	***397,340***	***100%***

HYDROZONE SUMMARY

*Hydrozone Description	Total Sq. Ft.	% of Landscape
Cool Season Turf (CST)	0	0.0%
Warm Season Turf (WST)	0	0.0%
High Water Use Plants (HW)	0	0.0%
Bioretention Plants (BR)	0	0.0%
Medium Water Use Plants (MW)	1,125	2.8%
Low Water Use Plants (LW)	36,571	90.9%
Very Low Water Use Plants (VLW)	2,552	6.3%
Water Feature	0	0.0%
Special Landscape Area (SLA)	0	0.0%
TOTAL	40,248	100.0%

**Irrigation Method	Total Sq. Ft.	% of Landscape
Rotor (FC-R, PC-R)	0	0.0%
Multi-Stream Rotator (MR)	0	0.0%
Spray (S)	0	0.0%
Bubbler (B)	35,615	88.5%
Drip (D)	0	0.0%
In-Line Drip (DL)	4,633	11.5%
Micro Spray (MS)	0	0.0%
Other (O)	0	0.0%

BROOKWATER
IRRIGATION CONSULTANTS
1228 QUARRY LANE, SUITE E
PLEASANTON, CALIFORNIA 94566
TEL 925.855.0417
E-MAIL OFFICE@BROOKWATER.COM

ZGF
ZIMMER GUNSUL FRASCA ARCHITECTS LLP

DENVER
LOS ANGELES
NEW YORK
PORTLAND
SEATTLE
WASHINGTON, DC
VANCOUVER, BC

1223 SW Washington Street
Suite 200
Portland, OR 97205
503.224.3860
www.zgf.com

ZGF Project Number P26717.wrss

Consultant

INTERSTICE ARCHITECTS
ARCHITECTURE URBAN DESIGN
LANDSCAPE ARCHITECTURE
www.intersticearchitects.com
1173 Sutter Street, San Francisco
415.285.3960 CA 94109

Full Design Team Roster on Cover Sheet

Client and Project Information

Stanford MEDICINE

1215 WELCH RD.

STANFORD UNIVERSITY
SCHOOL OF MEDICINE

Original Issue
ASA 12.06.24

Revisions
RESUBMITTAL 02.28.2025
RESUBMITTAL 2 04.22.2025

Key Plan and Orientation

Sheet Status

Sheet Title
IRRIGATION GENERAL NOTES & LEGEND

Sheet Number
ASA-L7.00

Current Issue
ASA

Current Issue Date
12.06.24

Sheet Size: 24 x 36 0" 1" 2" 11/14/2024 3:03:48 PM

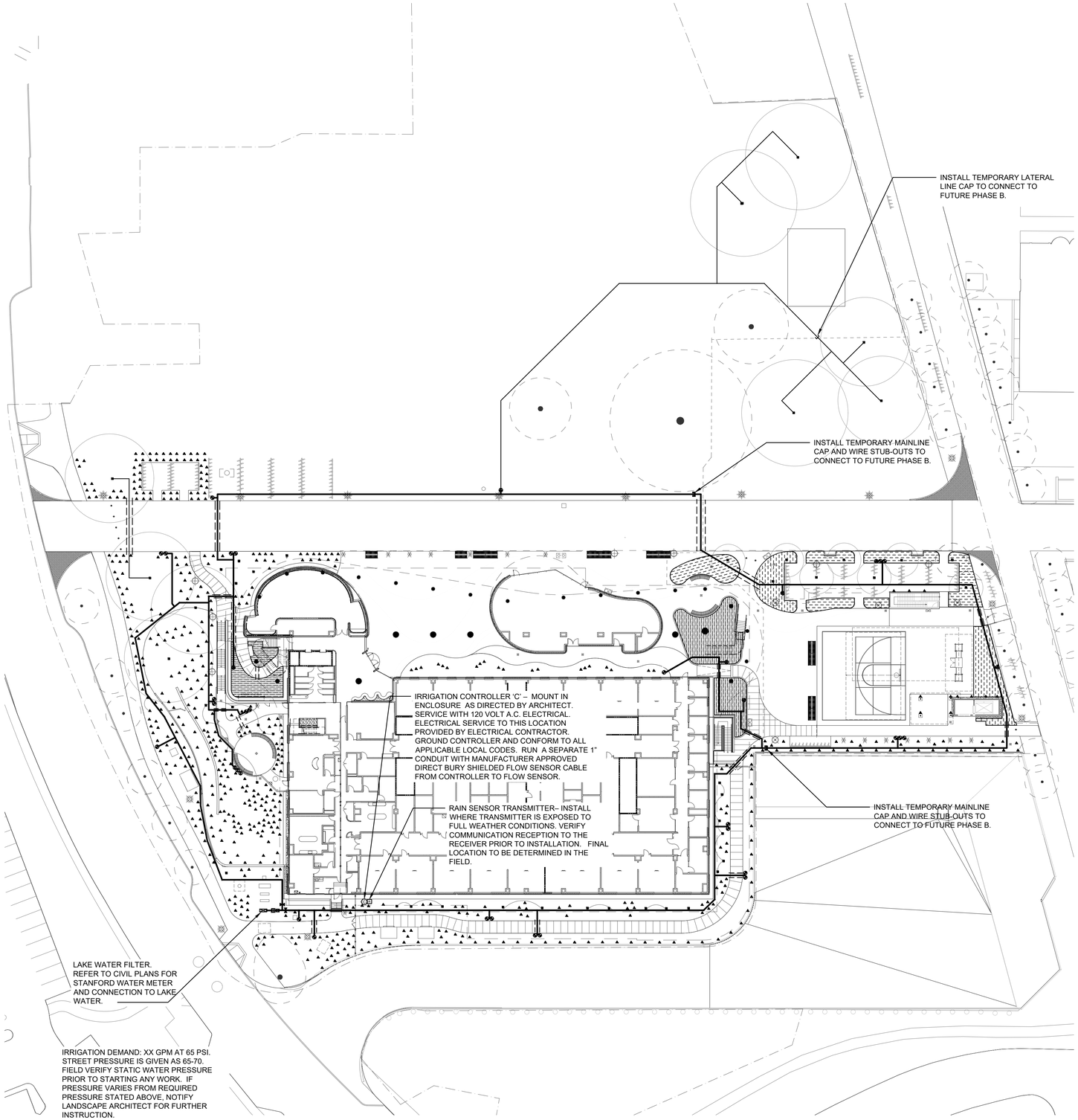

1 IRRIGATION PLAN - GROUND LEVEL
1" = 20'-0"

0 30' 60' 120'

Sheet Size: 24 x 36 | 0" 1" 2" | 11/14/2024 3:03:48 PM | 3/4/2025 9:22:39 AM | Autodesk Docs://P26717.wrss - Stanford Welch Road/24-01 1215 WRSS - LANDSCAPE R23 CENTRAL.rvt

ZGF
ZIMMER GUNSUL FRASCA ARCHITECTS LLP

DENVER
LOS ANGELES
NEW YORK
PORTLAND
SEATTLE
WASHINGTON, DC
VANCOUVER, BC

1223 SW Washington Street
Suite 200
Portland, OR 97205
503.224.3860
www.zgf.com

ZGF Project Number P26717.wrss

Consultant

INTERSTICE ARCHITECTS
ARCHITECTURE URBAN DESIGN
LANDSCAPE ARCHITECTURE
www.intersticearchitects.com
1173 Sutter Street, San Francisco
415.285.3960 CA 94109

Full Design Team Roster on Cover Sheet

Client and Project Information

Stanford MEDICINE

1215 WELCH RD.

STANFORD UNIVERSITY
SCHOOL OF MEDICINE

Original Issue
ASA 11.15.24

Revisions
RESUBMITTAL 02.28.2025
RESUBMITTAL 2 04.22.2025

Key Plan and Orientation

Sheet Status

Sheet Title
IRRIGATION PLAN

Sheet Number
ASA-L7.10

Current Issue
ASA

Current Issue Date
12.06.24

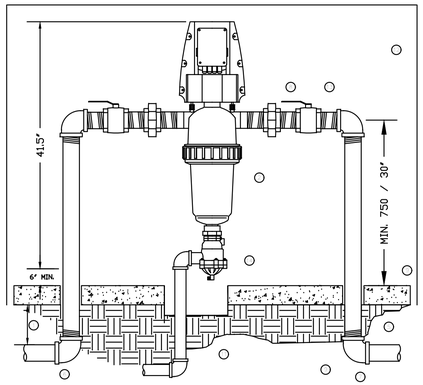

- TRENCH DEPTH. REFER TO SPECIFICATIONS.
- AMIAD 2" TAF-750 FILTER WITH CARTRIDGE DISC.
- THREADED BRASS PIPING AND FITTINGS EXTENDED 4" BEYOND CONCRETE PAD.
- 4" THICK CONCRETE PAD FOR ENCLOSURE.
- PVC SCHEDULE 80 COUPLER SXT (TWO REQUIRED)
- MINIMUM 2" WATER SOURCE, AS REQUIRED
- 2" PVC PRESSURE SUPPLY LINE THROUGHOUT SYSTEM
- BRASS UNION INSTALLED ON TOP NEXT TO FILTER
- BRASS 90 DEGREE ELL (4 REQUIRED)
- PURGE VALVE AS PART OF VALVE ASSEMBLY – 4" MINIMUM BOTTOM CLEARANCE
- 1/2" DIAMETER PVC PIPE TO AND THROUGH THE NEAREST CURB, CORE AND EXTEND TO DRAIN. CONNECTION, BY THE PURGE VALVE.
- LE MEUR ENCLOSURE SEE FDG IR-04
- BRASS ISOLATION BALL VALVE
- CENTER 10" ROUND VALVE BOX AT CONCRETE PAD HEIGHT FOR REMOVAL OF FILTER CARTRIDGE SERVICE

NOTE: PROVIDE A 110 VAC POWER SOURCE FOR THE AMIAD TAF-750 LAKE WATER FILTER CONTROLLER. 110 VAC POWER PROVIDED BY OTHERS. THE LANDSCAPE CONTRACTOR SHALL COORDINATE THE POWER WIRES FROM THE SOURCE TO THE FILTER CONTROLLER AND MAKE THE FINAL HOOK-UP. ALL 105 VAC POWER WIRING SHALL BE INSTALLED PER CODE BY A LICENSED ELECTRICAL CONTRACTOR.

- EACH SITE HAS ITS OWN POC AND FILTER

LAKE_WATER_FILTER_INSTALLATION

GROUNDS	NAME	DATE

IR–03

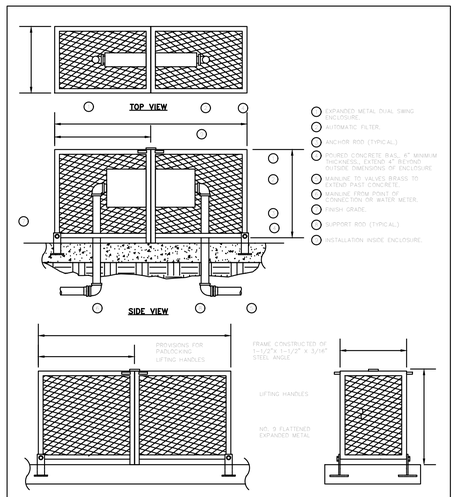

NOTES:
1. ENCLOSURE TO BE POWDER COATED, BLACK.
2. FOR CUSTOM BUILD CONTACT LE MEUR MANUFACTURING.
3. BLACK INSULATION ATTACHED INTERIOR

LAKE WATER FILTER ENCLOSURE LE MEUR MANUFACTURING (TWO PIECE) FOR AMIAD SELF-FLUSHING FILTER

ELEVATION VIEW

STANFORD UNIVERSITY FACILITY OPERATIONS				DWG.
Drawing Title: LAKE_WATER_FILTER_ENCLOSURE_INSTALLATION				IR–04
Scale: NTS	Check: GROUNDS	Rev. By: NAME	Rev. Date: DATE	

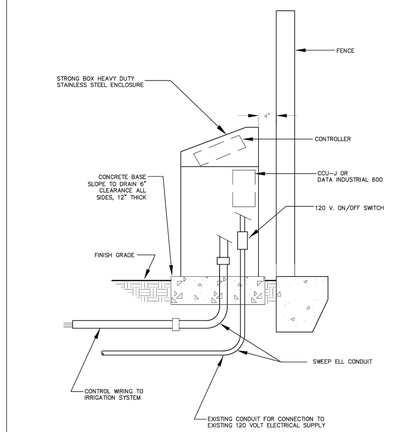

NOTE:
CONTROLLER TO BE PROPERLY GROUNDED PER ARTICAL 250 OF THE NATIONAL ELECTRIC CODE AND CONFORM TO LOCAL REGULATIONS.

STANFORD UNIVERSITY FACILITY OPERATIONS				DWG.
Drawing Title: PEDESTAL MOUNT CONTROLLER INSTALLATION				IR–07
Scale: NTS	Check: GROUNDS	Rev. By: O.G.	Rev. Date: 12/6/12	

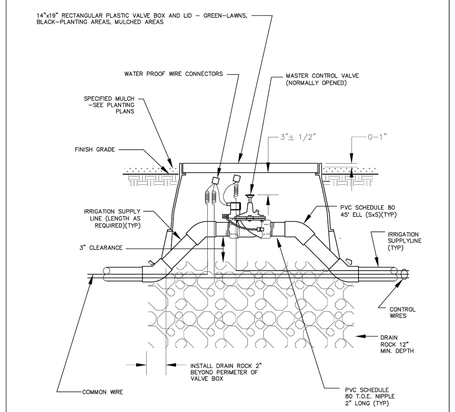

STANFORD UNIVERSITY FACILITY OPERATIONS				DWG.
Drawing Title: MASTER CONTROL VALVE INSTALLATION				IR–02
Scale: NTS	Check: GROUNDS	Rev. By: O.G	Rev. Date: 12/16/12	

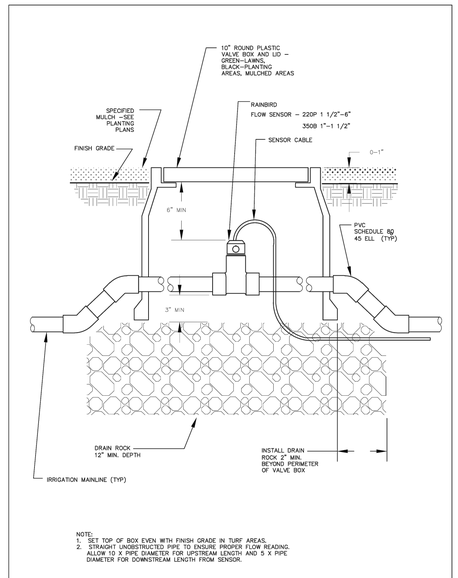

NOTE:
1. SET TOP OF BOX EVEN WITH FINISH GRADE IN TURF AREAS.
2. STRAIGHT UNOBSTRUCTED PIPE TO ENSURE PROPER FLOW READING. ALLOW 10 X PIPE DIAMETER FOR UPSTREAM LENGTH AND 5 X PIPE DIAMETER FOR DOWNSTREAM LENGTH FROM SENSOR.

STANFORD UNIVERSITY FACILITY OPERATIONS				DWG.
Drawing Title: FLOW SENSOR INSTALLATION				IR–04
Scale: NTS	Check: GROUNDS	Rev. By: O.G.	Rev. Date: 12/6/12	

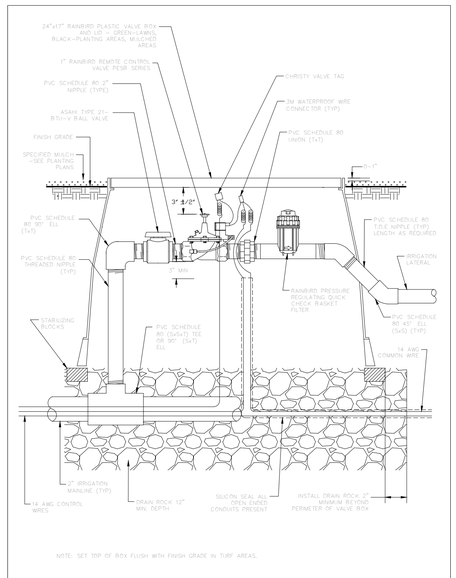

NOTE: SET TOP OF BOX FLUSH WITH FINISH GRADE IN TURF AREAS.

STANFORD UNIVERSITY FACILITY OPERATIONS				DWG.
Drawing Title: 1" DRIP VALVE ASSEMBLY INSTALLATION – LOW FLOW				IR–12
Scale: NTS	Check: GROUNDS	Rev. By: JEM	Rev. Date: 11/30/15	

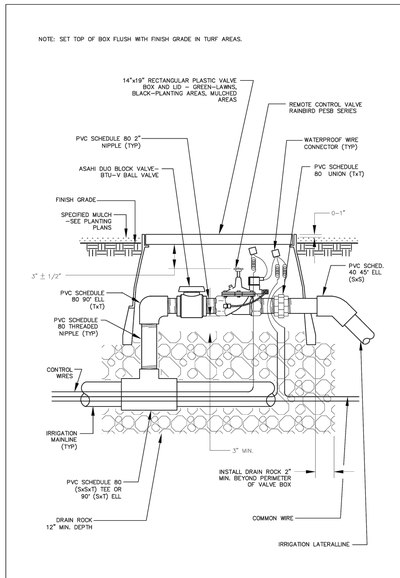

STANFORD UNIVERSITY FACILITY OPERATIONS				DWG.
Drawing Title: REMOTE CONTROL VALVE ASSEMBLY				IR–10
Scale: NTS	Check: GROUNDS	Rev. By: O.G.	Rev. Date: 03/21/13	

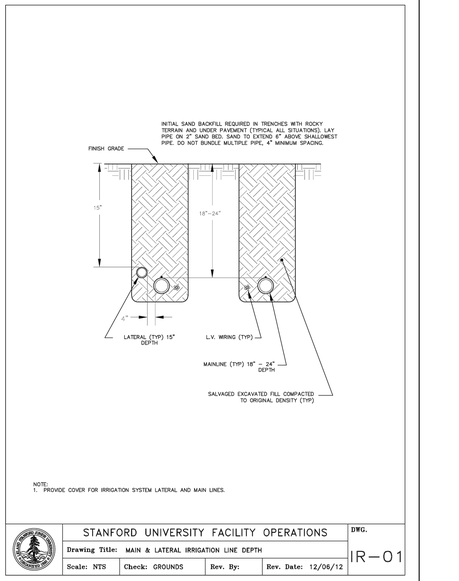

NOTE:
1. PROVIDE COVER FOR IRRIGATION SYSTEM LATERAL AND MAIN LINES.

STANFORD UNIVERSITY FACILITY OPERATIONS				DWG.
Drawing Title: MAIN & LATERAL IRRIGATION LINE DEPTH				IR–01
Scale: NTS	Check: GROUNDS	Rev. By:	Rev. Date: 12/06/12	

BROOKWATER
IRRIGATION CONSULTANTS
480 ST. JOHN STREET, SUITE 220
PLEASANTON, CALIFORNIA 94566
TEL 925.855.0417 FAX 925.855.0357
E-MAIL JANET@BROOKWATER.COM

ZGF
ZIMMER GUNSUL FRASCA ARCHITECTS LLP

DENVER
LOS ANGELES
NEW YORK
PORTLAND
SEATTLE
WASHINGTON, DC
VANCOUVER, BC

1223 SW Washington Street
Suite 200
Portland, OR 97205
503.224.3860
www.zgf.com

ZGF Project Number P26717.wrss

Consultant

INTERSTICE ARCHITECTS
ARCHITECTURE URBAN DESIGN
LANDSCAPE ARCHITECTURE
www.intersticearchitects.com
1173 Sutter Street, San Francisco
415.285.3960 CA 94109

Full Design Team Roster on Cover Sheet

Client and Project Information

Stanford MEDICINE

1215 WELCH RD.

STANFORD UNIVERSITY
SCHOOL OF MEDICINE

Original Issue
ASA 12.06.24

Revisions
RESUBMITTAL 02.28.2025

Key Plan and Orientation

Sheet Status

Sheet Title
IRRIGATION DETIALS

Sheet Number
ASA-L7.20

Current Issue
ASA

Current Issue Date
12.06.24

11/14/2024 3:03:48 PM
2"
1"
0"
Sheet Size: 24 x 36

SPECIFICATION RAIN BIRD VB SERIES VALVE BOXES
GREEN – LAWN
BLACK – PLANTING AREAS & MULCHED AREAS

NOTES:
1. CENTER BOXES OVER VALVES.
2. SET BOXES IN GROUND COVER/SHRUB AREA TO AVOID LAWNS.
3. SET BOXES PARALLEL TO EACH OTHER, LEVEL AND PERPENDICULAR TO EDGE.
4. AVOID HEAVILY COMPACTING SOIL AROUND BOXES TO PREVENT DAMAGING VALVE BOXES.
5. LOCATE ON SIDE PATHS OR SERVICE AREAS, NOT ALONG MAIN WALKWAYS OR ENTRIES. U/L/CPD AND GROUNDS TO APPROVE FINAL LOCATIONS BEFORE SYSTEM DESIGN IS FINALIZED.

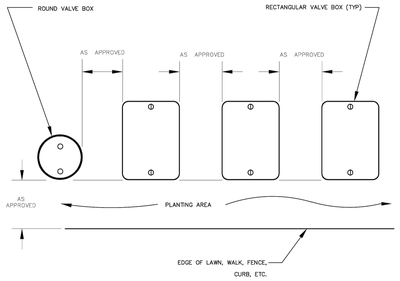

PLAN VIEW

STANFORD UNIVERSITY FACILITY OPERATIONS				DWG.
Drawing Title: VALVE BOX INSTALLATION				IR–05
Scale: NTS	Check: GROUNDS	Rev. By: OG	Rev. Date: 12/6/12	

3M DBY SYSTEM INSTALLATION SPECIFICATIONS

NOTE: MAXIMUM WIRE SIZES PER CONNECTOR ARE 3 – #14'S O R 2 – #12'S.

STEP 1: STRIP WIRES 1/2" FROM ENDS.

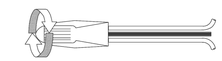

STEP 2: APPLY SCOTCHLOK Y SPRING CONNECTOR IN A CLOCKWISE DIRECTION.

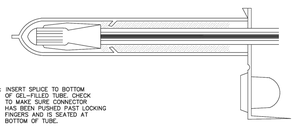

STEP 3: INSERT SPLICE TO BOTTOM OF GEL-FILLED TUBE, CHECK TO MAKE SURE CONNECTOR HAS BEEN PUSHED PAST LOCKING FINGERS AND IS SEATED AT BOTTOM OF TUBE.

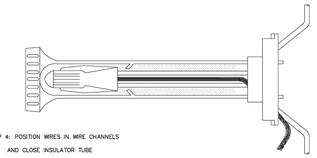

STEP 4: POSITION WIRES IN WIRE CHANNELS AND CLOSE INSULATOR TUBE COVER.

STANFORD UNIVERSITY FACILITY OPERATIONS				DWG.
Drawing Title: 3M DBY DIRECT BURY WIRE				IR–09
Scale: NTS	Check: GROUNDS	Rev. By: OG	Rev. Date: 12/6/12	

NOTE: SET TOP OF BOX EVEN WITH FINISH GRADE IN TURF AREAS.

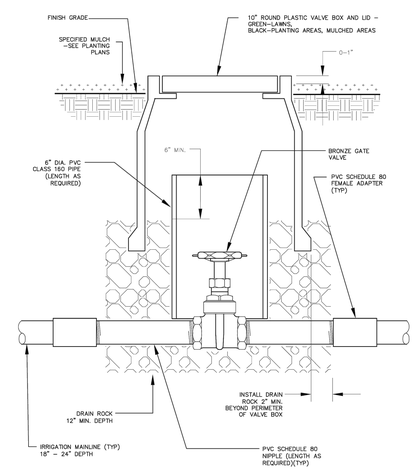

STANFORD UNIVERSITY FACILITY OPERATIONS				DWG.
Drawing Title: 2 1/2" AND SMALLER GATE VALVE INSTALLATION				IR–12
Scale: NTS	Check: GROUNDS	Rev. By: O.G.	Rev. Date: 12/6/12	

NOTE: SET TOP OF BOX EVEN WITH FINISH GRADE IN TURF AREAS.

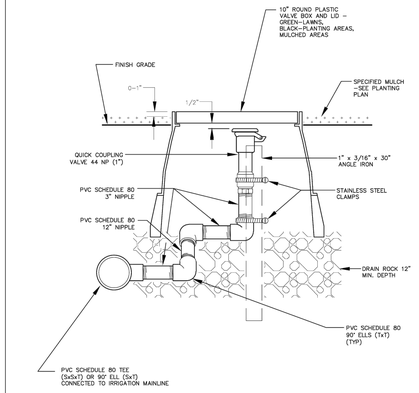

STANFORD UNIVERSITY FACILITY OPERATIONS				DWG.
Drawing Title: QUICK COUPLING VALVE INSTALLATION				IR–11
Scale: NTS	Check: GROUNDS	Rev. By: O.G.	Rev. Date: 12/6/12	

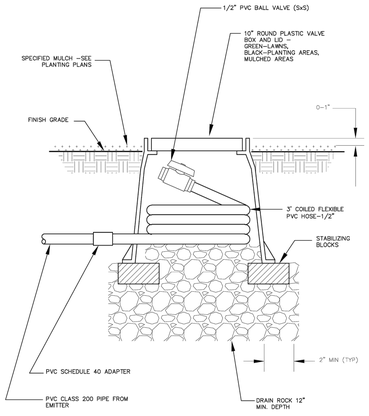

STANFORD UNIVERSITY FACILITY OPERATIONS				DWG.
Drawing Title: SUB–SURFACE DRIP IRRIGATION FLUSH VALVE INSTALLATION				IR–22
Scale: NTS	Check: GROUNDS	Rev. By: O.G.	Rev. Date: 12/13/12	

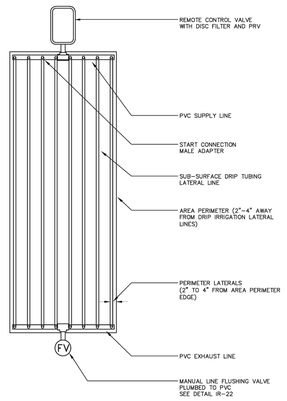

SUB SURFACE DRIP IRRIGATION FOR SHRUB PLANTING – END FEED LAYOUT

PLAN VIEW

STANFORD UNIVERSITY FACILITY OPERATIONS				DWG.
Drawing Title: SUB SURFACE DRIP IRR. FOR SHRUB PLANTING – END FEED				IR–25
Scale: NTS	Check: GROUNDS	Rev. By: OG	Rev. Date: 12/13/12	

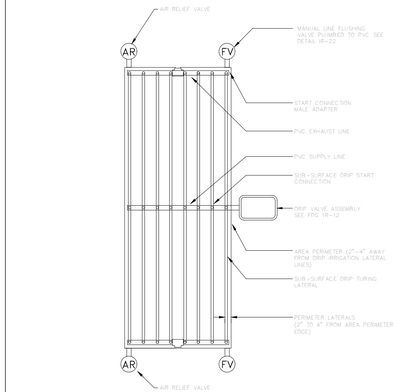

SUB SURFACE DRIP IRRIGATION FOR SHRUB PLANTING – CENTER FEED LAYOUT

PLAN VIEW

NOTE: ADD EXTRA FLUSH VALVE IF ZONE SEPARATES IN DIFFERENT DIRECTION. REFER TO RAINBIRD XFS–09–12 WITH COPPER SHIELD SPECIFICATION FOR FLUSH VALVE INSTALLATION AND MAXIMUM LINEAR FEET PER ZONE. ADDITIONAL LAYOUT OPTIONS REFER TO RAINBIRD ONLINE SPECIFICATIONS.

STANFORD UNIVERSITY FACILITY OPERATIONS				DWG.
Drawing Title: SUB SURFACE DRIP IRR. FOR SHRUB/TURF PLANTING–CENTER FEED				IR–25
Scale: NTS	Check: GROUNDS	Rev. By: O.G.	Rev. Date: 12/14/15	

NOTE:
MOUNT RAIN SENSOR WHERE IT WILL BE EXPOSED TO UNOBSTRUCTED RAINFALL BUT NOT IN THE PATH OF SPRINKLER SPRAY

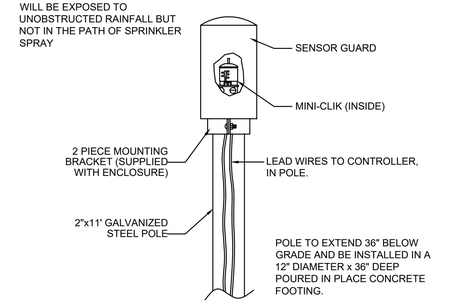

1 RAIN SENSOR IN GUARD INSTALLATION DETAIL
NOT TO SCALE

BROOKWATER
IRRIGATION CONSULTANTS
480 ST. JOHN STREET, SUITE 220
PLEASANTON, CALIFORNIA 94566
TEL 925.855.0417 FAX 925.855.0357
E-MAIL JANET@BROOKWATER.COM

Sheet Size 24 x 36

2" 1" 0"

ZGF
ZIMMER GUNSUL FRASCA ARCHITECTS LLP

DENVER
LOS ANGELES
NEW YORK
PORTLAND
SEATTLE
WASHINGTON, DC
VANCOUVER, BC

1223 SW Washington Street
Suite 200
Portland, OR 97205
503.224.3860
www.zgf.com

ZGF Project Number P26717.wrss

Consultant

INTERSTICE ARCHITECTS
ARCHITECTURE URBAN DESIGN
LANDSCAPE ARCHITECTURE
www.intersticearchitects.com
1173 Sutter Street, San Francisco
415.285.3960 CA 94109

Full Design Team Roster on Cover Sheet

Client and Project Information

Stanford MEDICINE

1215 WELCH RD.

STANFORD UNIVERSITY
SCHOOL OF MEDICINE

Original Issue
ASA 12.06.24

Revisions
RESUBMITTAL 02.28.2025

Key Plan and Orientation

Sheet Status

Sheet Title
IRRIGATION DETAILS

Sheet Number
ASA-L7.21

Current Issue
ASA

Current Issue Date
12.06.24

LUMINAIRE SCHEDULE

TYPE	DESCRIPTION	HOUSING	SHIELDING	MOUNTING	FINISH	UL/IP RATING	DRIVER	LAMP(S)	INPUT WATTS	VOLTAGE	MFG/CATALOG #
D7	2IN ROUND DOWNLIGHT AT GROUND FLOOR EXTERIOR CANOPY	EXTRUDED ALUMINUM	LENS	RECESSED	TO BE SELECTED BY ARCHITECT.	WET	0-10V DIMMING TO 1%	LED, 2112 LUMENS, 2700K, 80+CRI	28.6W	UNV	GOTHAM INCITO 2 #ICO2-40/20-[FINISH]-LSS-45D-MVOLT-UGZ OR APPROVED EQUIVALENT
T	EXTERIOR LEVEL 1 CANOPY SURFACE MOUNTED LUMINAIRE; 45 DEGREE BEAM DISTRIBUTION	EXTRUDED ALUMINUM	LENS	SURFACE MOUNT	BLACK	WET	0-10V DIMMABLE	LED, 1922 LUMENS, 2700K, 80+CRI	28.6W	UNV	GOTHAM INCITO 2 #ICO2SC-27/20-AR-LSS-45D-MVOLT-UGZ-[FINISH] OR APPROVED EQUIVALENT
T3	SURFACE MOUNTED SQUARE DOWNLIGHT TO EXTERIOR CANOPIES	ALUMINUM	CLEAR GLASS	SURFACE MOUNTED ON CEILING ABOVE SLATS	BLACK	IP65	LEADING/ TRAILING EDGE DIMMING	LED, 2700K, 900 LUMENS	11.4W	120V	ASTRO LIGHTING KOS SQUARE 140 LED OR APPROVED EQUIVALENT
T5	EXTERIOR UPPER LEVEL STAIR LANDING DOWNLIGHT AT METAL CEILING; 50X20 DEGREE BEAMSPREAD	EXTRUDED ALUMINUM	LENS	RECESSED INTO METAL CEILING	TO BE SELECTED BY ARCHITECT.	WET	0-10V DIMMING TO 1%	LED, 2112 LUMENS, 2700K, 80+CRI	28.6W	UNV	GOTHAM INCITO 2 #ICO2-27/20-[FINISH]-LSS-5020D-MVOLT-UGZ OR APPROVED EQUIVALENT
T6	EXTERIOR UPPER LEVEL STAIR RAMP ADJUSTABLE DOWNLIGHT AT METAL CEILING; 50X20 DEGREE BEAMSPREAD	EXTRUDED ALUMINUM	LENS	RECESSED INTO METAL STAIR RAMP UNDERSIDE	TO BE SELECTED BY ARCHITECT.	WET	0-10V DIMMING TO 1%	LED, 2112 LUMENS, 2700K, 80+CRI	28.6W	UNV	GOTHAM INCITO 2 #ICO2ADJ-27/20-[FINISH]-LSS-5020D-MVOLT-UGZ OR APPROVED EQUIVALENT
AP	EXTERIOR AREA POLE LIGHT	ALUMINUM POLE AND FIXTURE TOP	INDIRECT REFLECTOR	POLE MOUNTED 14' TOTAL, 11'-8" POLE	STANFORD STANDARD BLACK	WET	0-10V DIMMMING	LED, 3998 LUMENS, 80+CRI, 3000K	64.5W	UNV	BEGA B77210 + K3 WITH 906HR POLE WITH MOTION SENSOR ON POLE TO MEET TITLE 24 (BEGA EMS-L3) OR APPROVED EQUIVALENT
BL	EXTERIOR BOLLARD LIGHT	CORROSION RESISTANT ALUMINUM	ANTI GLARE CONE	GROUND SOCKET FOR PLANTING IN PLANTER	CAMPUS STANDARD BLACK FINISH	WET	0-10V DIMMING	LED, 2700K, 840 LUMENS	8W	UNV	ERCO LIGHTING 35744.023 IN 2700K + MOUNTING PLATE AND GROUND SOCKET OR APPROVED EQUIVALENT
EL	EXTERIOR MULTI POLE BASKETBALL COURT LIGHTING (HIGH OUTPUT)	DIE CAST ALUMINUM HOUSING	TEMPERED CLEAR GLASS LENS	POLE MOUNTED	CAMPUS STANDARD BLACK FINISH	WET	0-10V DIMMMING	LED, 2700K, 2710 LUMENS	31W	277V	SELUX OLIVIO MEDIO LED OLML-F40-X-2G700-30-XX-UNV OR APPROVED EQUIVALENT
EL2	EXTERIOR MULTI POLE LIGHTING (MID OUTPUT)	DIE CAST ALUMINUM HOUSING	TEMPERED CLEAR GLASS LENS	POLE MOUNTED	CAMPUS STANDARD BLACK FINISH	WET	0-10V DIMMMING	LED, 2700K, 2037 LUMENS	23W	277V	SELUX OLIVIO MEDIO LED OLML-F40-X-2G525-30-XX-UNV OR APPROVED EQUIVALENT
GP	EXTERIOR GLOBE POLE LIGHT	ALUMINUM POLE AND FIXTURE TOP	LENS	POLE MOUNTED TO 12' POLE	CAMPUS STANDARD BLACK FINISH	WET	0-10V DIMMMING	LED, 2700K, 4020 LUMENS	58W	UNV	BEGA B84404 K27 POLE: 906HR-12'-BLK OR APPROVED EQUIVALENT
LS	EXTERIOR CAMPUS STANDARD LANTERN LIGHT	ALUMINUM POLE AND FIXTURE TOP	FROSTED GLASS OPTIC	POLE MOUNTED TO 10' POLE	CAMPUS STANDARD BLACK FINISH	WET	STANDARD	LED, 2700K, 5692 LUMENS	50W	UNV	HOLOPHANE PTE3-P30-27K-MVOLT-GL3-BK-BL-SR-RFD-FROSTED GLASS OPTIC, POLE: RFD201757 0908-30504T3A-BK-HH-SC ANCHOR BOLTS: AB90830504T3B W/3 BOLT PATTERN BLACK
WL	EXERIOR WALL STEP LIGHT	ALUMINUM	CLEAR SAFETY GLASS	WALL MOUNTED @ 1'-6" AFF	TO BE SELECTED BY ARCHITECT.	WET	0-10V DIMMMING	LED, 2700K, 1164 LUMENS, 80+ CRI	21W	UNV	BEGA B24061-2700K-[FINISH] OR APPROVED EQUIVALENT
WL1	EXTERIOR WALL LIGHT	MARINE GRADE DIE CAST ALUMINUM	HIGHT IMPACT LENS	WALL MOUNTED AT 7FT	CAMPUS STANDARD BLACK FINISH	WET	0-10V DIMMING	LED, 3000K, 2586 LUMENS	30W	UNV	KENALL MILLENIUM ROUND MR17EL PP MB 2530K DV SA OR APPROVED EQUIVALENT

NOTES:

1. THIS LUMINAIRE SCHEDULE IS NOT COMPLETE WITHOUT A COPY OF THE LIGHTING SPECIFICATIONS.
2. DIMMING CONTROL PROTOCOL (0-10VDC, LINE VOLTAGE, DALI, ETC.) COMPATIBLE WITH LIGHTING CONTROL SYSTEM AS SPECIFIED AND SHOWN ON DRAWINGS.
3. COORDINATE ALL CEILING TYPES WITH LUMINAIRE LOCATIONS PRIOR TO ORDERING LUMINAIRES. COORDINATE INSTALLATION WITH REFLECTED CEILING PLAN.
4. SPECIFIED MANUFACTURERS ARE APPROVED TO SUBMIT BID. INCLUSION DOES NOT RELIEVE MANUFACTURER FROM SUPPLYING PRODUCT AS DESCRIBED.
5. PROVIDE SUBMITTALS THAT INCLUDE THE LUMINAIRE, LAMP AND DRIVER INFORMATION OF EACH LUMINAIRE, WITH APPLICABLE OPTIONS CLEARLY CHECKED OR HIGHLIGHTED. SUBMITTALS NOT INCLUDING THIS INFORMATION WILL BE RETURNED AS REJECTED BY THE ENGINEER OF RECORD.
6. PROVIDE COMMISSIONING OF THE LIGHTING AND LIGHTING CONTROLS IN ACCORDANCE WITH CALIFORNIA TITLE 24 LIGHTING COMMISSIONING REQUIREMENTS.

ZGF
ZIMMER GUNSUL FRASCA ARCHITECTS LLP

DENVER
LOS ANGELES
NEW YORK
PORTLAND
SEATTLE
WASHINGTON, DC
VANCOUVER, BC

1223 SW Washington Street
Suite 200
Portland, OR 97205
503.224.3860
www.zgf.com

ZGF Project Number P26717.wrss

Consultant

INTERFACE ENGINEERING
PROJECT 2024-0227
CONTACT Kristina Santi
1999 Harrison Street, Suite 550
Oakland, CA 94612
TEL 415.489.7240
www.interfaceengineering.com

Full Design Team Roster on Cover Sheet

Client and Project Information

Stanford MEDICINE

1215 Welch Road

Original Issue
ASA SUBMITTAL 12.06.2024

Revisions
RESUBMITTAL 02.28.2025

Key Plan and Orientation

Sheet Status

Sheet Title
LUMINAIRE SCHEDULE

Sheet Number
ASA-EL0.02

Current Issue
ASA SUBMITTAL

Current Issue Date
12.06.2024

Sheet Size: 24 x 36 | 0" 1" 2" | 3/3/2025 11:19:31 AM

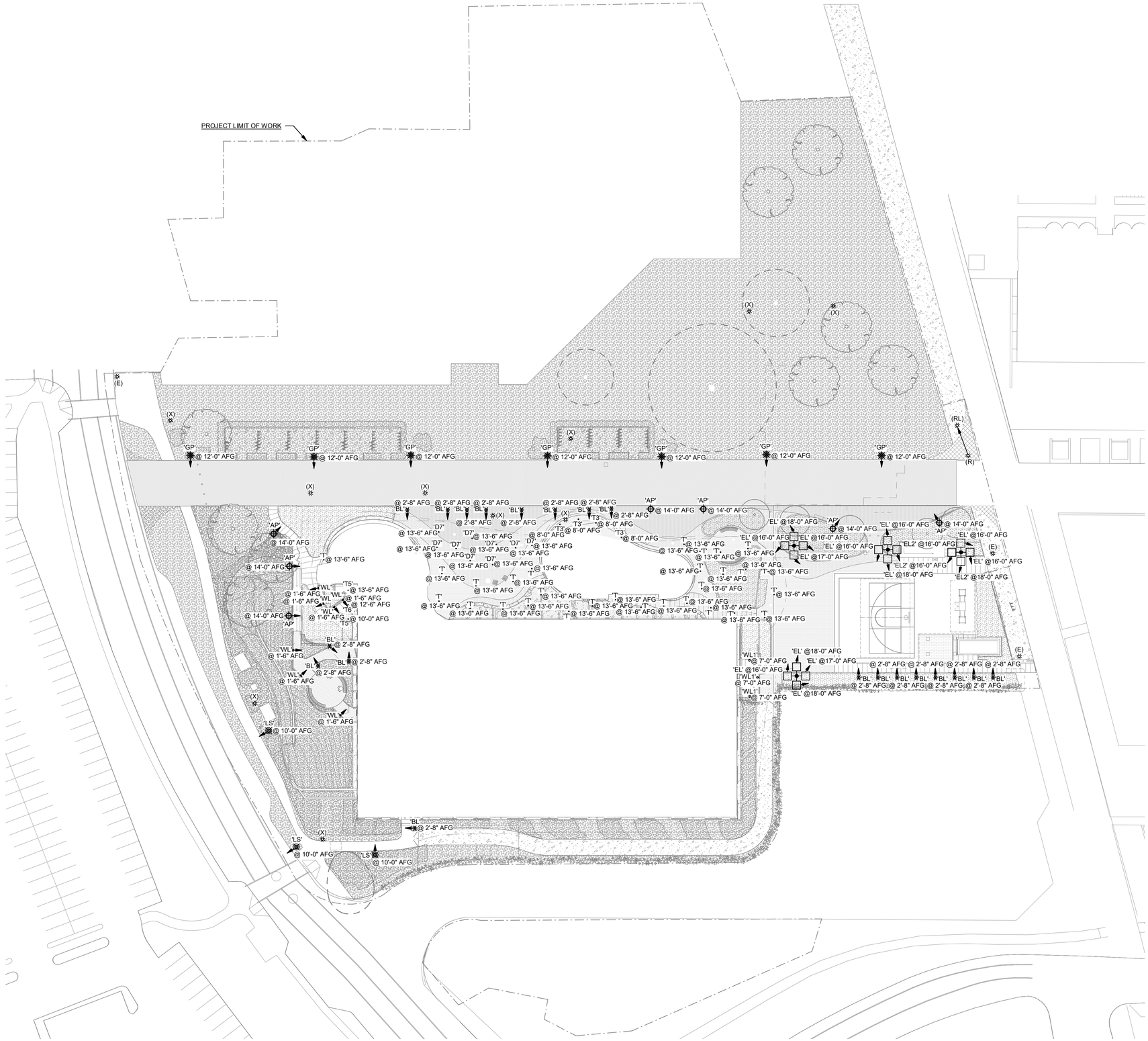

1 PLAN, SITE - LIGHTING

0' 30' 60'

1" = 30'-0"

Sheet Size: 24 x 36 | 0" | 1" | 2" | 3/3/2025 11:19:38 AM

ZGF

ZIMMER GUNSUL FRASCA ARCHITECTS LLP

DENVER
LOS ANGELES
NEW YORK
PORTLAND
SEATTLE
WASHINGTON, DC
VANCOUVER, BC

1223 SW Washington Street
Suite 200
Portland, OR 97205
503.224.3860
www.zgf.com

ZGF Project Number P26717.wrss

Consultant

INTERFACE ENGINEERING

PROJECT 2024-0227
CONTACT Kristina Santi

1999 Harrison Street, Suite 550
Oakland, CA 94612
TEL 415.489.7240
www.interfaceengineering.com

Full Design Team Roster on Cover Sheet

Client and Project Information

Stanford MEDICINE

1215 Welch Road

Original Issue
ASA SUBMITTAL 12.06.2024

Revisions
RESUBMITTAL 02.28.2025

Key Plan and Orientation

TRUE NORTH
16.08 DEGREES

PROJECT NORTH

Sheet Status

Sheet Title
PLAN, SITE - LIGHTING

Sheet Number
ASA-EL1.01

Current Issue
ASA SUBMITTAL

Current Issue Date
12.06.2024

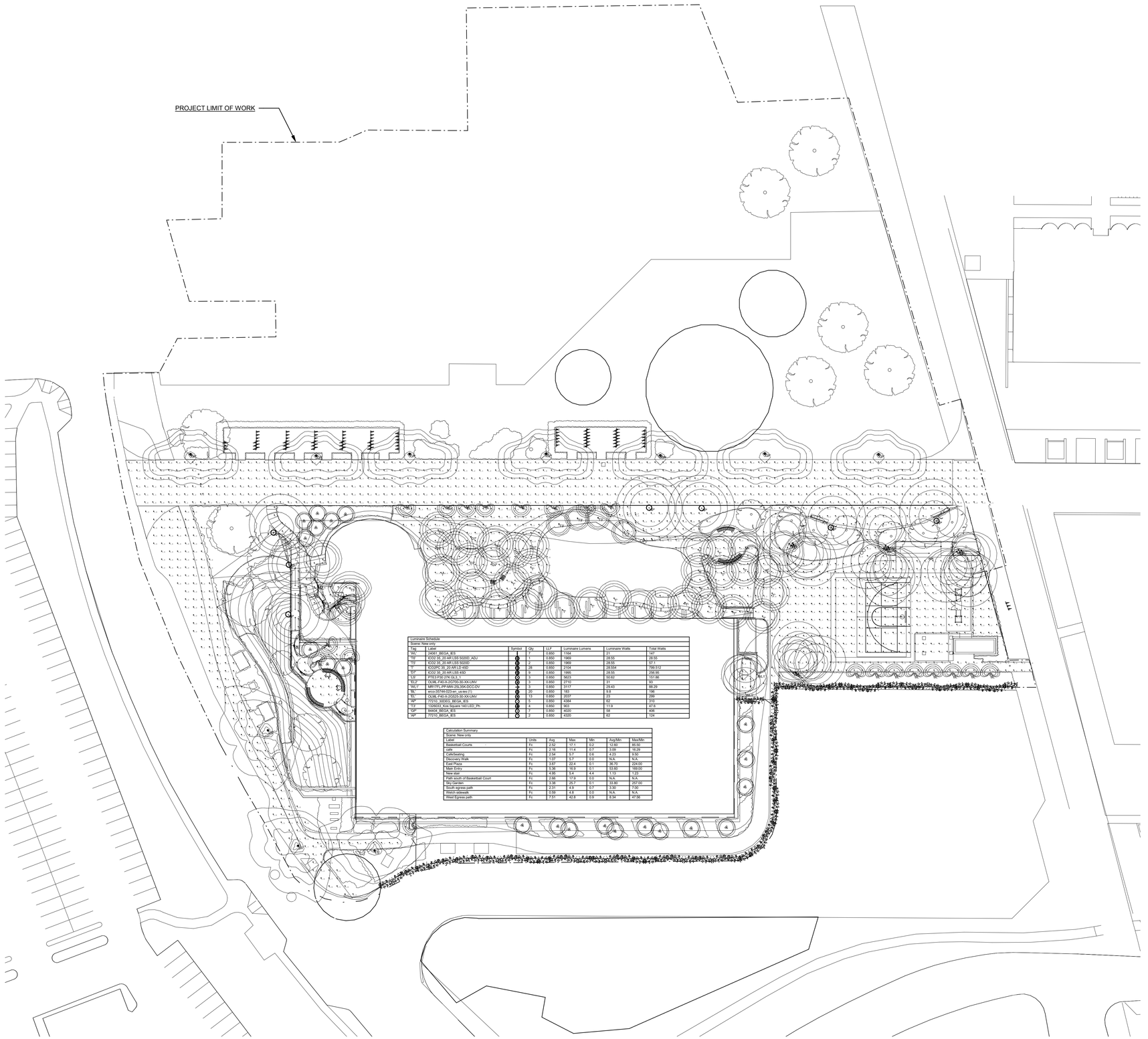

Luminaire Schedule
Scene: New only

Tag	Label	Symbol	Qty	LLF	Luminaire Lumens	Luminaire Watts	Total Watts
WL	24061_BEGA_IES		7	0.850	1164	21	147
TE	ICO2 35_20 AR LSS 5020D_ADJ		1	0.850	1969	28.55	28.55
TS	ICO2 35_20 AR LSS 5020D		2	0.850	1969	28.55	57.1
T	ICO2PC 35_20 AR LD 450		28	0.850	2104	28.554	799.512
TJ	ICO2 35_20 AR LSS 450		9	0.850	1995	28.55	256.95
LS	PTE3 P30 27K GL3_1		3	0.850	5623	50.62	151.86
TLZ	OLML-F40-X-2G700-30-XX-UNV		3	0.850	2710	31	93
WLT	MR17FL-PP-MW-25L35K-DCC-DV		3	0.850	3117	29.43	88.29
BL	emco-35T4A-023-wn_ceiles (1)		20	0.850	183	9.8	196
TL	OLML-F40-X-2G525-30-XX-UNV		13	0.850	2037	23	299
AP	77210_30DEG_BEGA_IES		5	0.850	4364	62	310
TJ	1326033_Kos Square 140 LED_Ph		4	0.850	903	11.9	47.6
GP	84404_BEGA_IES		7	0.850	4020	58	406
AP	77210_BEGA_IES		2	0.850	4320	62	124

Calculation Summary
Scene: New only

Label	Units	Avg	Max	Min	Avg/Min	Max/Min
Basketball Courts	Fc	2.52	17.1	0.2	12.60	85.50
cafe	Fc	2.18	11.4	0.7	3.09	16.29
CafeSeating	Fc	2.54	5.7	0.6	4.23	9.50
Discovery Walk	Fc	1.07	5.7	0.0	N.A.	N.A.
East Plaza	Fc	3.67	22.4	0.1	36.70	224.00
Main Entry	Fc	5.36	18.9	0.1	53.60	189.00
New stair	Fc	4.95	5.4	4.4	1.13	1.23
Path south of Basketball Court	Fc	2.66	17.9	0.0	N.A.	N.A.
Sky Garden	Fc	3.38	25.7	0.1	33.80	257.00
South egress path	Fc	2.31	4.9	0.7	3.30	7.00
Welch sidewalk	Fc	0.59	4.8	0.0	N.A.	N.A.
West Egress path	Fc	7.51	42.8	0.9	8.34	47.56

1 PLAN, SITE - LIGHTING PHOTOMETRIC CALCULATION

0' 30' 60'
1" = 30'-0"

Sheet Size: 24 x 36 | 0" | 1" | 2" | 3/3/2025 11:19:39 AM

ZGF
ZIMMER GUNSUL FRASCA ARCHITECTS LLP

DENVER
LOS ANGELES
NEW YORK
PORTLAND
SEATTLE
WASHINGTON, DC
VANCOUVER, BC

1223 SW Washington Street
Suite 200
Portland, OR 97205
503.224.3860
www.zgf.com

ZGF Project Number P26717.wrss

Consultant

INTERFACE ENGINEERING
PROJECT 2024-0227
CONTACT Kristina Santi
1999 Harrison Street, Suite 550
Oakland, CA 94612
TEL 415.489.7240
www.interfaceengineering.com

Full Design Team Roster on Cover Sheet

Client and Project Information

Stanford MEDICINE

1215 Welch Road

Original Issue
ASA SUBMITTAL 12.06.2024

Revisions
RESUBMITTAL 02.28.2025

Key Plan and Orientation

Sheet Status

Sheet Title
PLAN, SITE - LIGHTING PHOTOMETRIC CALCULATION

Sheet Number
ASA-EL1.02

Current Issue
ASA SUBMITTAL

Current Issue Date
12.06.2024

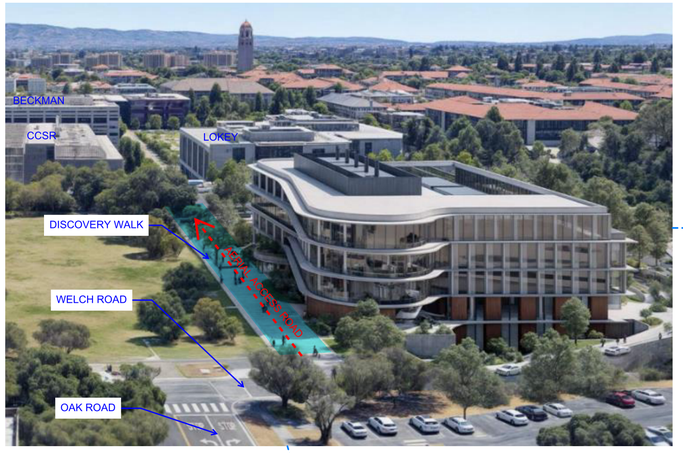

CONCEPTUAL RENDERING OF BUILDING WITH AERIAL ACCESS ROAD

COOPER LANE

PROJECT LIMIT OF WORK

JOBSITE STAGING AREA

GENERATOR PAD AND UNITS FOR 1215 WELCH AND CCSR - COORDINATE WITH UTILITIES AND ADJACENT TREES

APPROXIMATE DIVIDING LINE BETWEEN PHASE A & PHASE B SCOPE. PRECISE LOCATION DETERMINED IN FIELD.

1215

CCSR

TREE #94

CCSR

HAGEY FOOTPRINT SEE PROJECT SEQUENCE NARRATIVE SHEET ASA-G0.06

TREE #109

TREE #92

GOVERNOR'S LANE

NEW EMERGENCY BLUE PHONE

BIKE PARKING

BOLLARDS NO CARS ON DISCOVERY WALK - FIRE ACCESS ONLY

FIRE LANE CURB SEE CIVIL DETAIL SHEET ASA-C9.05

NEW FIRE HYDRANT

POLE LIGHT

EXTERIOR STAIR FOR FIRE DEPARTMENT ROOF ACCESS (TRANSITION TO LADDER ON LEVEL 4)

EXISTING FIRE HYDRANT **2-125-H**

DISCOVERY WALK

PEDESTRIAN AND BIKE PATH & FIRE LANE

28' - 6" DRIVEABLE WIDTH

19' - 9" FSD

CAFE SEATING

RELOCATED EMERGENCY BLUE PHONE

DISCOVERY WALK

BICYCLE PARKING

EXISTING EGRESS STAIR FROM BELOW

WELLNESS AREA WITH OUTDOOR GYM/ WORKOUT AREA

LINE OF STRUCTURE ABOVE

CLASSROOM

ENTRY PLAZA (COVERED)

CAFE

DRY GARDEN

114' - 8" FSD

155' - 5" FSD

BASKETBALL HALF-COURT

EAST PLAZA

WELCH ROAD

LOBBY

EGRESS FROM BASEMENT LEVEL

EXISTING FIRE HYDRANT 2-139-H

(E) VAULT PMS 4

(E) VAULT MH 3NC10

WEST GARDEN

SLOPED GRADE

WELCH ROAD RESEARCH LABORATORY

FENCE WITH GATE. NO PUBLIC BEYOND THIS POINT. MAINENANCE AND FIRE ACCESS ONLY.

EXISTING ELEVATOR ENCLOSURE & SHADE STRUCTURE

EXISTING SOM LOADING DOCK (BELOW GRADE)

UTILITIES - SEE CIVIL PLANS

37' - 0" FSD

LINE OF LEVEL 0 BELOW

PROJECT LIMIT OF WORK

TRANSFORMERS

LINE OF STRUCTURE ABOVE

EXISTING FIRE HYDRANT AT LOADING DOCK LEVEL

FENCE WITH GATE. NO PUBLIC BEYOND THIS POINT. MAINENANCE AND FIRE ACCESS ONLY.

LOADING DOCK RAMP DOWN

TREE #188

EXISTING FIRE HYDRANT 2-1358-H

JOBSITE TRAILERS

CAMPUS DRIVE

1 ASA-A1.00 **SITE - OVERALL PLAN ASA**
1" = 30'-0"

GENERAL NOTES:

1. REFER TO SHEET ASA-L0.00 FOR LANDSCAPE NARRATIVE
2. REFER TO SHEET ASA-L2.00 FOR LANDSCAPE MATERIAL PLAN
3. REFER TO SHEET ASA-EL1.01 FOR SITE LIGHTING PLAN WITH LIGHTING FIXTURE DESIGNATIONS AND POLE HEIGHTS
4. REFER TO SHEET ASA-EL1.02 FOR LIGHT PHOTOMETRIC CALCULATIONS

LEGEND

- PROJECT LIMIT OF WORK
- COVERED BY BUILDING ABOVE
- EXIT TO PUBLIC WAY
- ASSUMED PROPERTY LINE
- FSD — FIRE SEPARATION DISTANCE

LOKEY

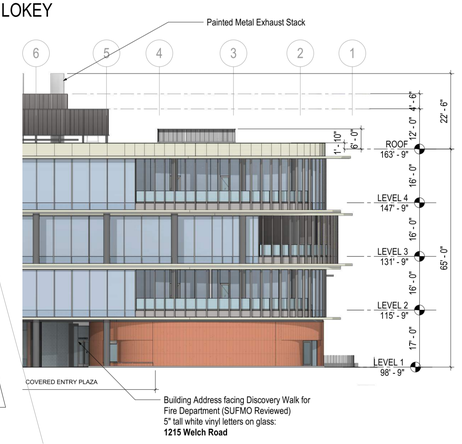

PARTIAL ELEVATION OF NORTH FACADE ADJACENT TO AERIAL ACCESS ROAD

ZGF
ZIMMER GUNSUL FRASCA ARCHITECTS LLP

DENVER
LOS ANGELES
NEW YORK
PORTLAND
SEATTLE
WASHINGTON, DC
VANCOUVER, BC

1223 SW Washington Street
Suite 200
Portland, OR 97205
503.224.3860
www.zgf.com

ZGF Project Number P26717.wrss

Consultant

Full Design Team Roster on Cover Sheet

Client and Project Information

Stanford MEDICINE

1215 Welch Road

Original Issue
ASA SUBMITTAL 12.06.2024

Revisions
RESUBMITTAL 02.28.2025
RESUBMITTAL 04.22.2025

Key Plan and Orientation

TRUE NORTH 16.08 DEGREES — PROJECT NORTH

Sheet Status

Sheet Title
OVERALL SITE PLAN SCOPE OF WORK

Sheet Number
ASA-A1.00

Current Issue
ASA SUBMITTAL

Current Issue Date
12.06.2024

Sheet Size: 24 x 36 | 0" | 1" | 2' | 4/30/2025 2:21:36 PM

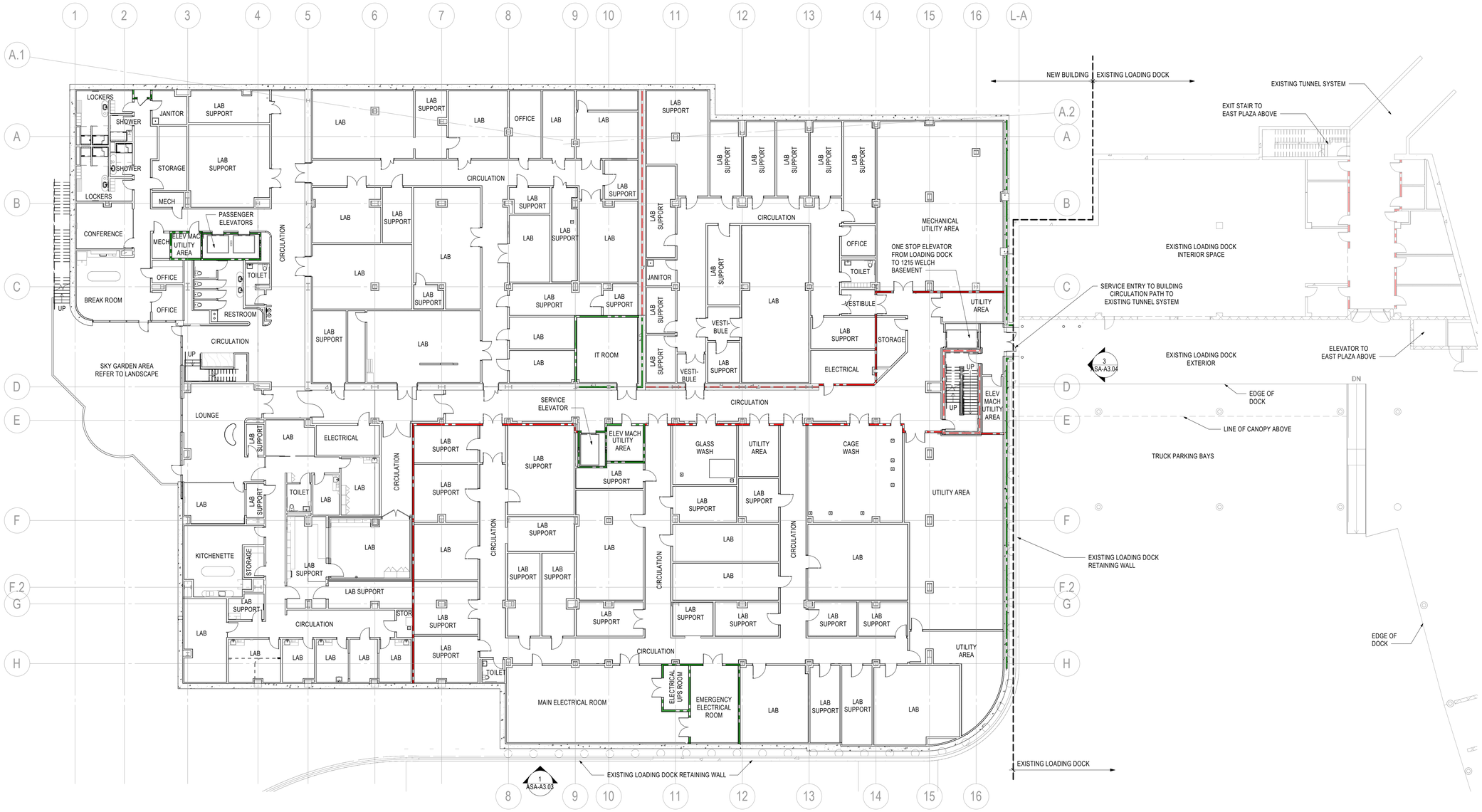

1 LEVEL 0 - ASA FLOOR PLAN

1/16" = 1'-0"

GENERAL NOTES:

1. REFER TO SHEET ASA-G0.04 & ASA-G0.05 FOR BUILDING GROSS AREA AND GUP CALCULATIONS
2. EXISTING LOADING DOCK RROJECT APPROVED WITH ASA # 9626-06-82-07A-07G
3. PREVIOUS MSOB BUILDING HAD NO BASEMENT OR BELOW GRADE CONNECTION TO LOADING DOCK

Sheet Size: 24 x 36

0" 1" 2"

ZGF
ZIMMER GUNSUL FRASCA ARCHITECTS LLP

DENVER
LOS ANGELES
NEW YORK
PORTLAND
SEATTLE
WASHINGTON, DC
VANCOUVER, BC

1223 SW Washington Street
Suite 200
Portland, OR 97205
503.224.3860
www.zgf.com

ZGF Project Number P26717.wrss

Consultant

Full Design Team Roster on Cover Sheet

Client and Project Information

Stanford MEDICINE

1215 Welch Road

Original Issue
ASA SUBMITTAL 12.06.2024

Revisions
RESUBMITTAL 02.28.2025

Key Plan and Orientation

TRUE NORTH 16.08 DEGREES

PROJECT NORTH

Sheet Status

Sheet Title
BASEMENT PLAN

Sheet Number
ASA-A1.01

Current Issue
ASA SUBMITTAL

Current Issue Date
12.06.2024

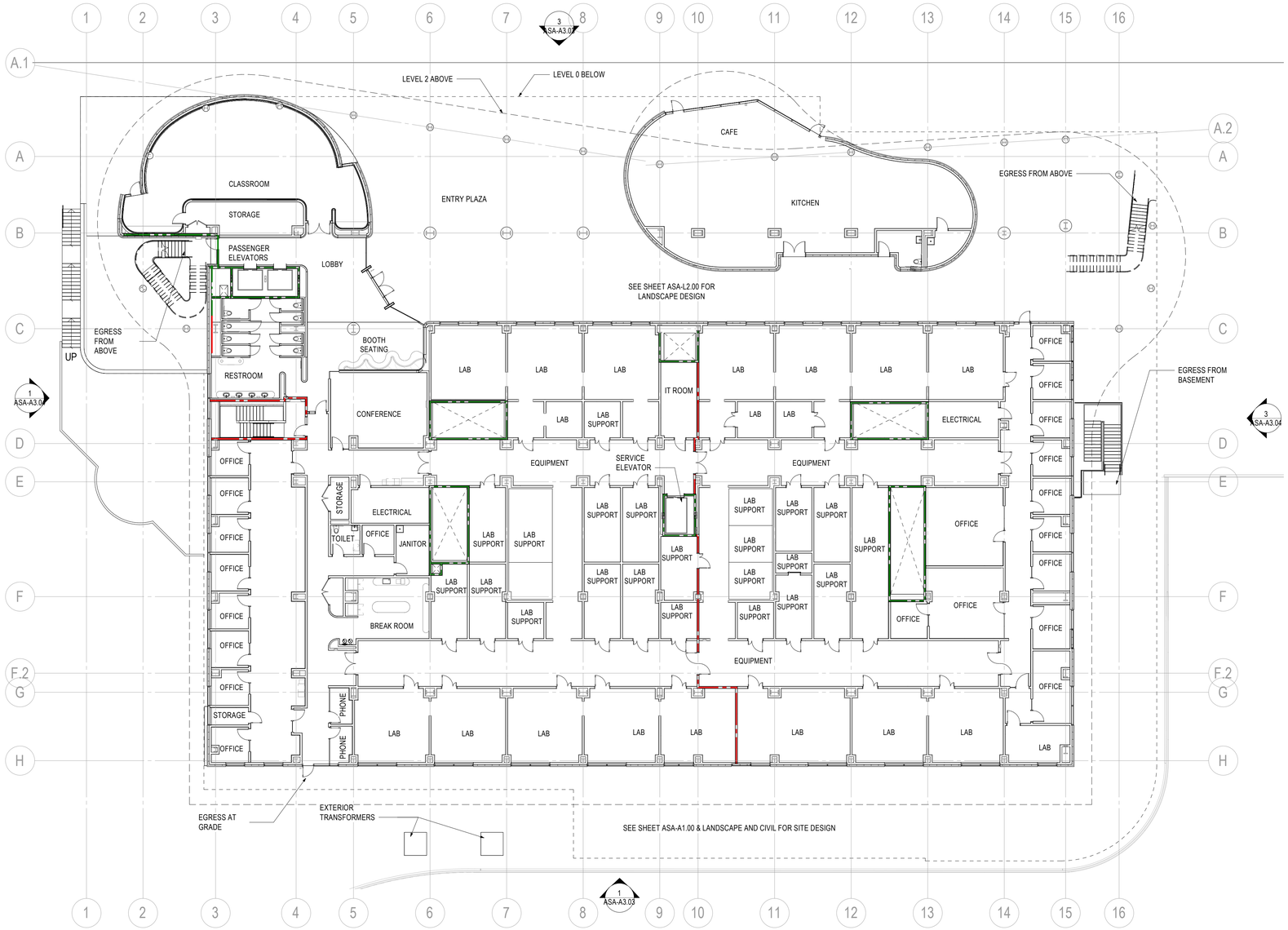

1 LEVEL 1 - ASA FLOOR PLAN

1 ASA-A1.02

1/16" = 1'-0"

GENERAL NOTES:

1. REFER TO SHEET ASA-G0.04 & ASA-G0.05 FOR BUILDING GROSS AREA AND GUP CALCULATIONS

Sheet Size: 24 x 36

0" 1" 2"

ZGF
ZIMMER GUNSUL FRASCA ARCHITECTS LLP

DENVER
LOS ANGELES
NEW YORK
PORTLAND
SEATTLE
WASHINGTON, DC
VANCOUVER, BC

1223 SW Washington Street
Suite 200
Portland, OR 97205
503.224.3860
www.zgf.com

ZGF Project Number P26717.wrss

Consultant

Full Design Team Roster on Cover Sheet

Client and Project Information

Stanford MEDICINE

1215 Welch Road

Original Issue
ASA SUBMITTAL 12.06.2024

Revisions
RESUBMITTAL 02.28.2025

Key Plan and Orientation

TRUE NORTH 16.08 DEGREES

PROJECT NORTH

Sheet Status

Sheet Title
LEVEL 1 PLAN

Sheet Number
ASA-A1.02

Current Issue
ASA SUBMITTAL

Current Issue Date
12.06.2024

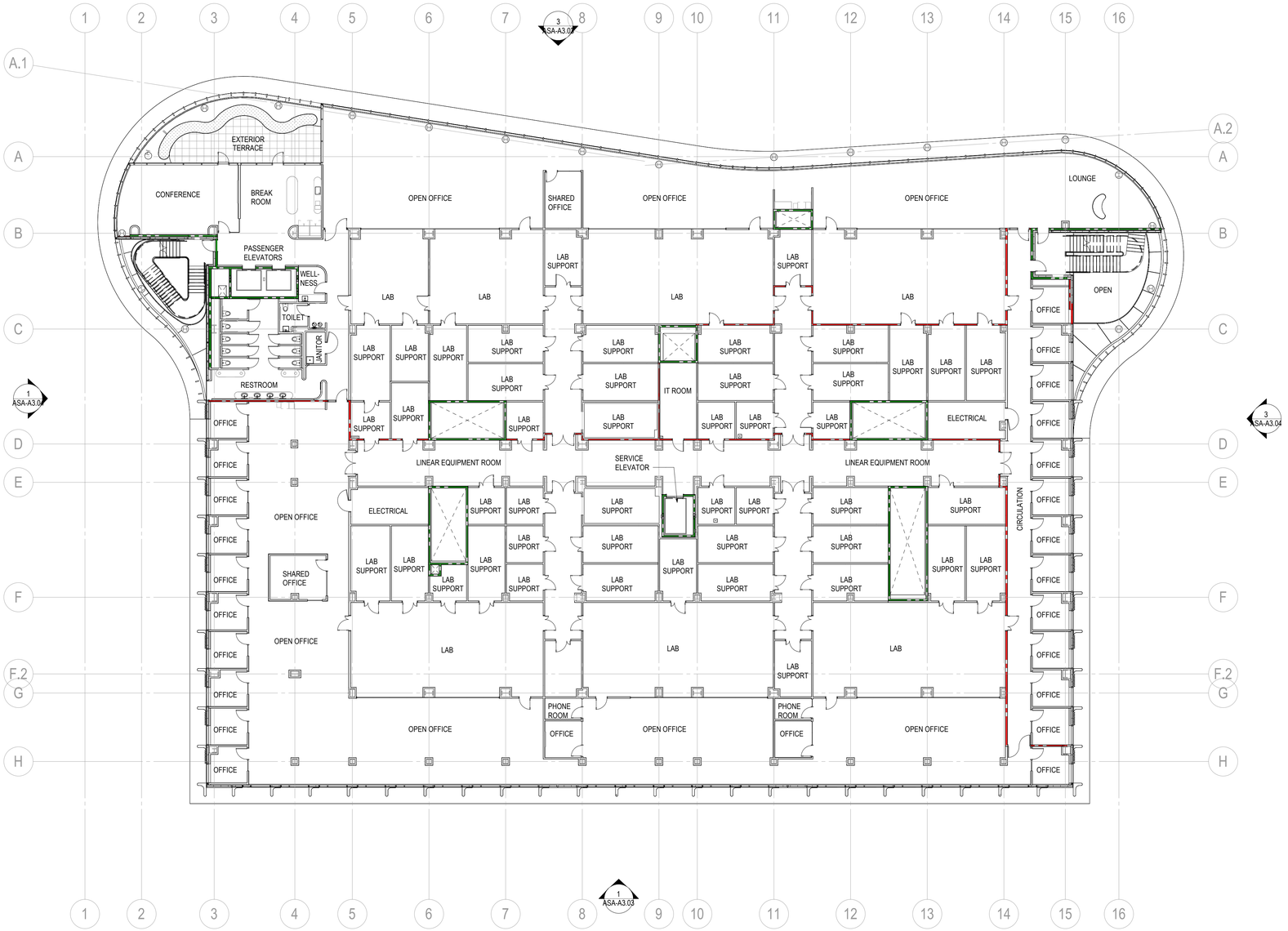

1 LEVEL 2 - ASA FLOOR PLAN

1/16" = 1'-0"

GENERAL NOTES:

1. REFER TO SHEET ASA-G0.04 & ASA-G0.05 FOR BUILDING GROSS AREA AND GUP CALCULATIONS

Sheet Size: 24 x 36

2" | 1" | 0"

ZGF
ZIMMER GUNSUL FRASCA ARCHITECTS LLP

DENVER
LOS ANGELES
NEW YORK
PORTLAND
SEATTLE
WASHINGTON, DC
VANCOUVER, BC

1223 SW Washington Street
Suite 200
Portland, OR 97205
503.224.3860
www.zgf.com

ZGF Project Number P26717.wrss

Consultant

Full Design Team Roster on Cover Sheet

Client and Project Information

Stanford MEDICINE

1215 Welch Road

Original Issue	
ASA SUBMITTAL	12.06.2024
Revisions	
RESUBMITTAL	02.28.2025

Key Plan and Orientation

TRUE NORTH 16.08 DEGREES

PROJECT NORTH

Sheet Status

Sheet Title

LEVEL 2 PLAN

Sheet Number

ASA-A1.03

Current Issue

ASA SUBMITTAL

Current Issue Date

12.06.2024

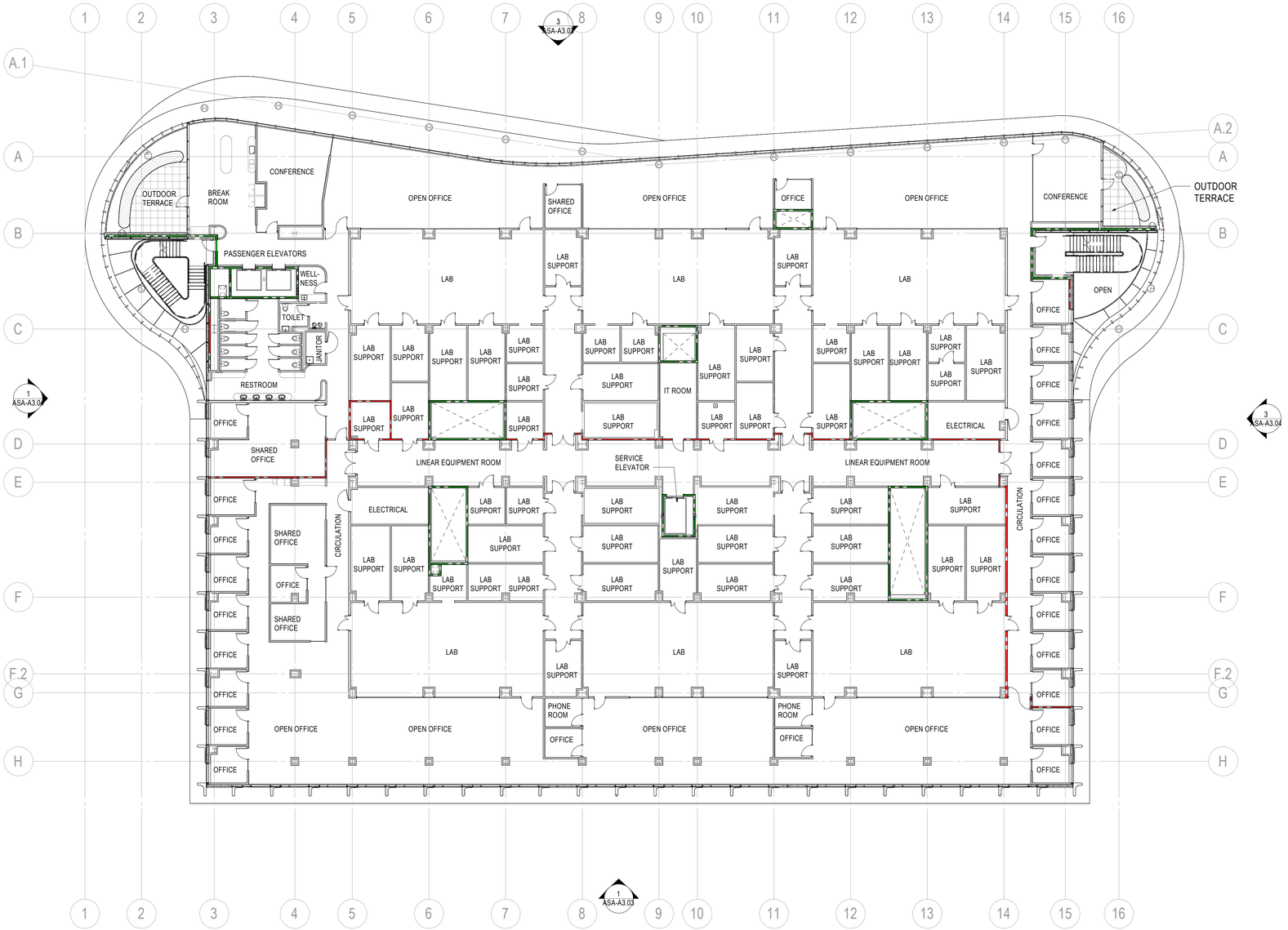

1 ASA-A1.04 **LEVEL 3 - ASA FLOOR PLAN**

1/16" = 1'-0"

GENERAL NOTES:

1. REFER TO SHEET ASA-G0.04 & ASA-G0.05 FOR BUILDING GROSS AREA AND GUP CALCULATIONS

Sheet Size: 24 x 36

2" 1" 0"

ZGF
ZIMMER GUNSUL FRASCA ARCHITECTS LLP

DENVER
LOS ANGELES
NEW YORK
PORTLAND
SEATTLE
WASHINGTON, DC
VANCOUVER, BC

1223 SW Washington Street
Suite 200
Portland, OR 97205
503.224.3860
www.zgf.com

ZGF Project Number P26717.wrss

Consultant

Full Design Team Roster on Cover Sheet

Client and Project Information

Stanford MEDICINE

1215 Welch Road

Original Issue	
ASA SUBMITTAL	12.06.2024
Revisions	
RESUBMITTAL	02.28.2025

Key Plan and Orientation

Sheet Status

Sheet Title

LEVEL 3 PLAN

Sheet Number

ASA-A1.04

Current Issue

ASA SUBMITTAL

Current Issue Date

12.06.2024

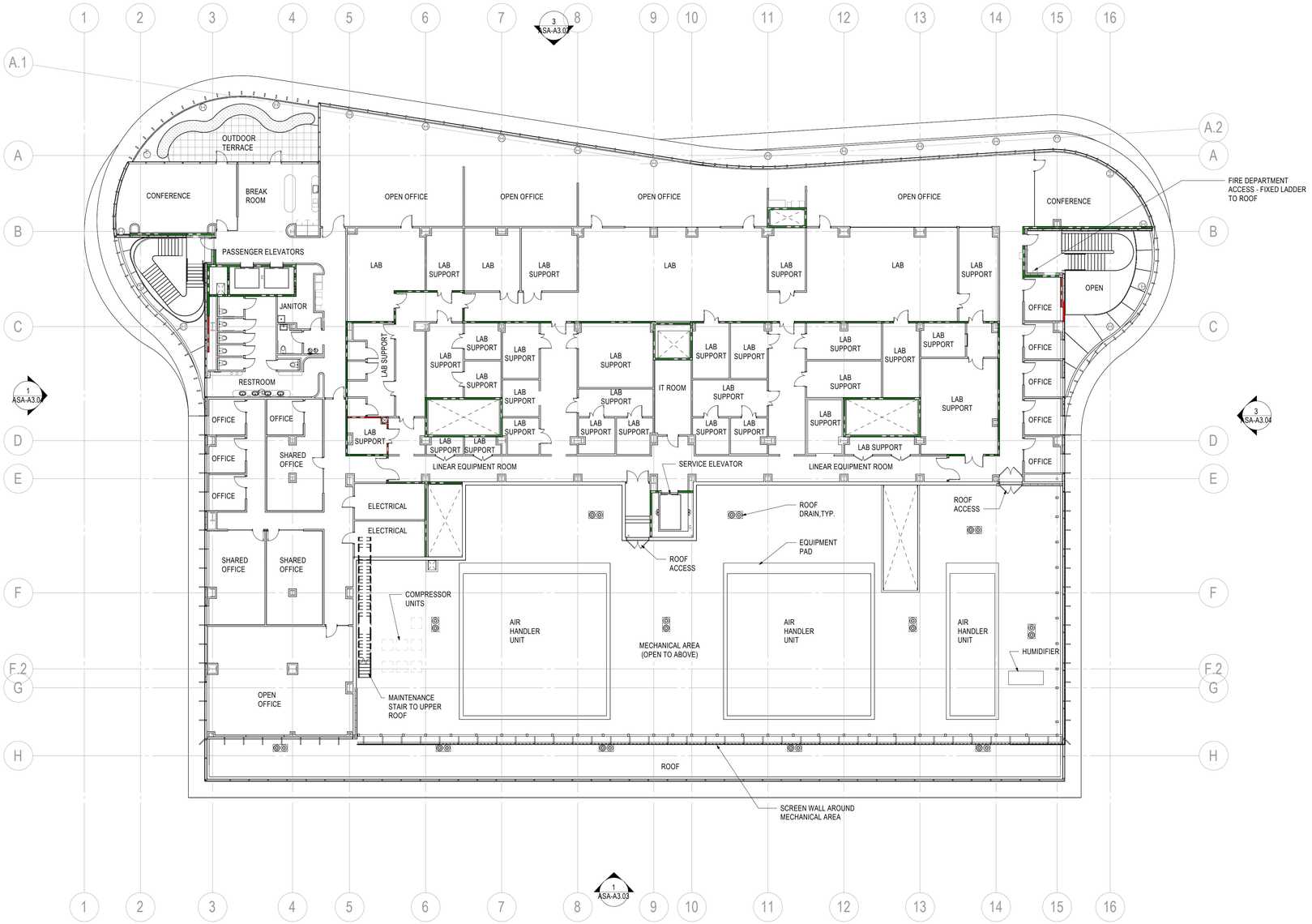

1 ASA-A1.05 **LEVEL 4 - ASA FLOOR PLAN**
1/16" = 1'-0"

GENERAL NOTES:

1. REFER TO SHEET ASA-G0.04 & ASA-G0.05 FOR BUILDING GROSS AREA AND GUP CALCULATIONS

Sheet Size: 24 x 36

ZGF
ZIMMER GUNSUL FRASCA ARCHITECTS LLP

DENVER
LOS ANGELES
NEW YORK
PORTLAND
SEATTLE
WASHINGTON, DC
VANCOUVER, BC

1223 SW Washington Street
Suite 200
Portland, OR 97205
503.224.3860
www.zgf.com

ZGF Project Number P26717.wrss

Consultant

Full Design Team Roster on Cover Sheet

Client and Project Information

Stanford MEDICINE

1215 Welch Road

Original Issue
ASA SUBMITTAL 12.06.2024

Revisions
RESUBMITTAL 02.28.2025

Key Plan and Orientation

TRUE NORTH 16.08 DEGREES

PROJECT NORTH

Sheet Status

Sheet Title
LEVEL 4 PLAN

Sheet Number
ASA-A1.05

Current Issue
ASA SUBMITTAL

Current Issue Date
12.06.2024

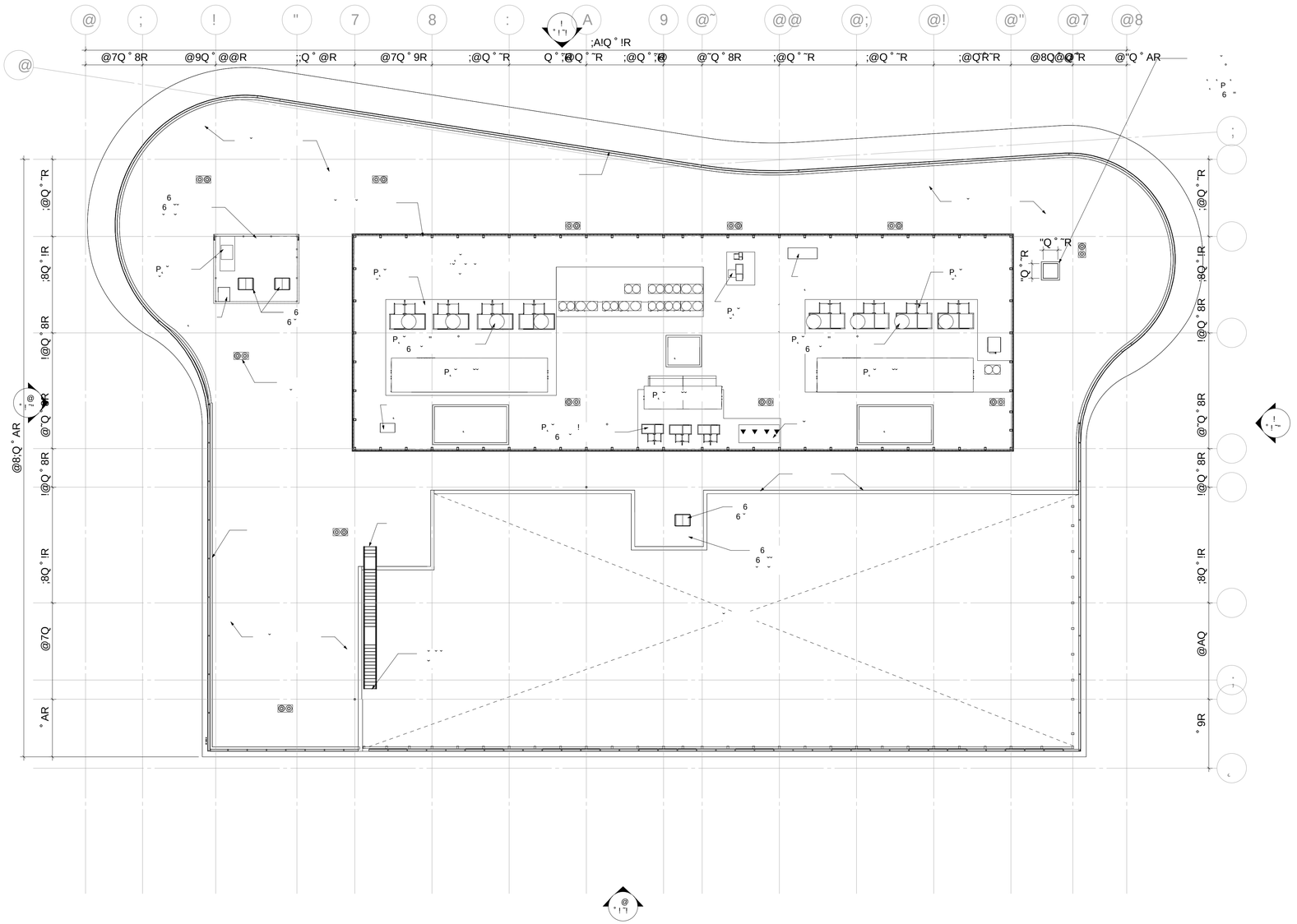

ZGF
ZIMMER GUNSUL FRASCA ARCHITECTS LLP

DENVER
LOS ANGELES
NEW YORK
PORTLAND
SEATTLE
WASHINGTON, DC
VANCOUVER, BC

$%&'()*+(*,--*
.'*- ˜˜
+,*/$(0° 1" ˜
˜#2 2#!,˜
33324)526+7

4 .(0%+' ˜123%. ;8:@: <.--
(&-1#'*&'

1## %-$)& %*2 (-'%. (& (E%. C%%'
#$%&' *&? .(0%+' &>(.2*$(&

Stanford MEDICINE

@;@7 %#+C (*?

.$)$&*# --1%
@; ˜8 ;˜;˜
%E$-$(&-
˜; ;A ;˜;7

%B #*& *&? .$%&'*˜$(&
@8 ˜A

C%%' '*'1-

C%%' $'#%

C%%' ˜123%.
2˜

1..%&' --1%

1..%&' --1% *'%
2˜ 2 ˜

C%%' $D%5 ;" F !8 ˜R @R ˜R

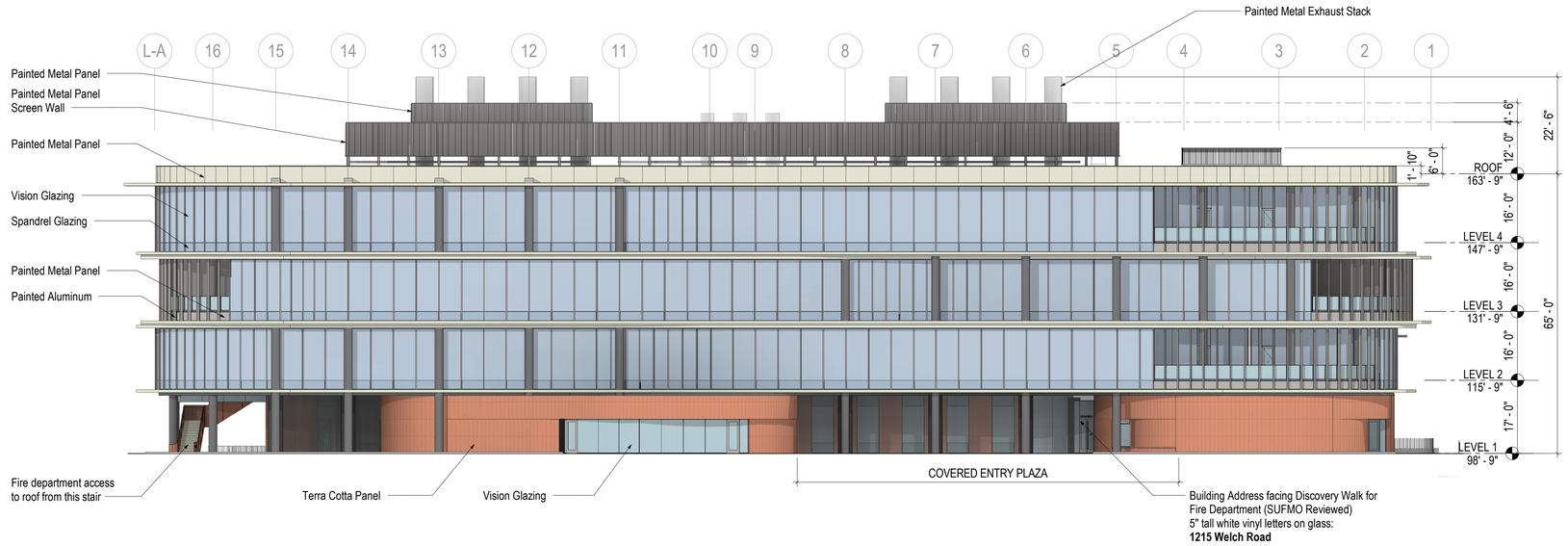

3 ASA-A3.03 **NORTH ELEVATION ASA**
1/16" = 1'-0"

1 ASA-A3.03 **SOUTH ELEVATION ASA**
1/16" = 1'-0"

MATERIAL LEGEND

WINDOWS, DOORS & FRAMES

- VISION GLAZING
- SPANDREL GLAZING
- PAINTED ALUMINUM

EXTERIOR WALLS

- TERRA COTTA PANEL RAINSCREEN ASSEMBLY
- TERRA COTTA PANEL RAINSCREEN ASSEMBLY

TRIM

- PAINTED METAL PANEL

ARCHITECTURAL ACCENTS

- PAINTED METAL PANEL
- PAINTED METAL PANEL

ZGF
ZIMMER GUNSUL FRASCA ARCHITECTS LLP

DENVER
LOS ANGELES
NEW YORK
PORTLAND
SEATTLE
WASHINGTON, DC
VANCOUVER, BC

1223 SW Washington Street
Suite 200
Portland, OR 97205
503.224.3860
www.zgf.com

ZGF Project Number P26717.wrss

Consultant

Full Design Team Roster on Cover Sheet

Client and Project Information

Stanford MEDICINE

1215 Welch Road

Original Issue
ASA SUBMITTAL 12.06.2024

Revisions
RESUBMITTAL 02.28.2025

Key Plan and Orientation

Sheet Status

Sheet Title
ELEVATIONS, EXTERIOR NS

Sheet Number
ASA-A3.03

Current Issue
ASA SUBMITTAL

Current Issue Date
12.06.2024

Sheet Size: 24 x 36
0" 1" 2"

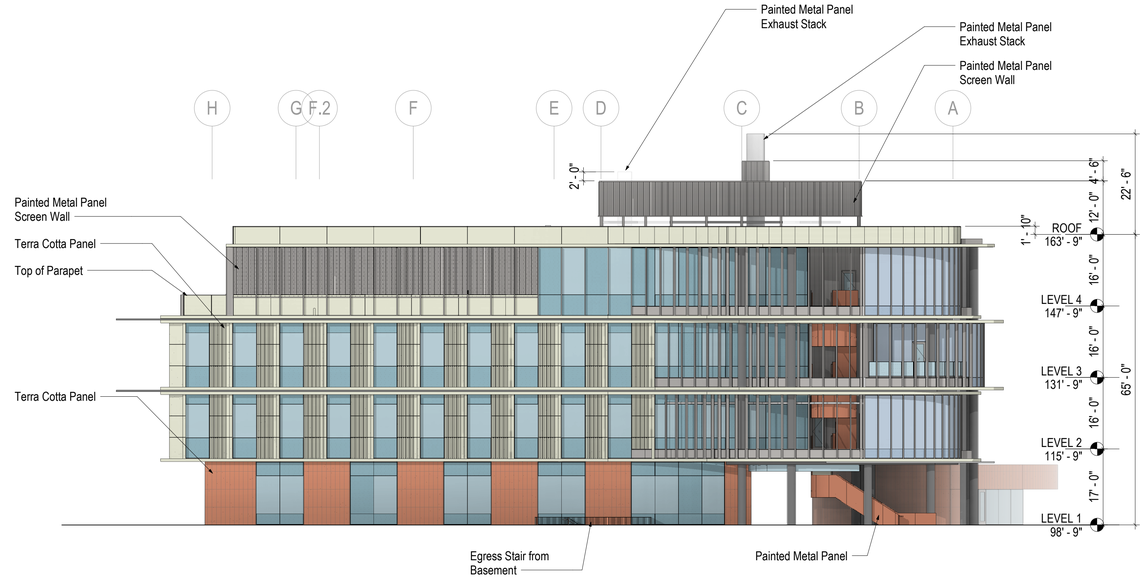

3 ASA-A3.04 **EAST ELEVATION ASA**
1/16" = 1'-0"

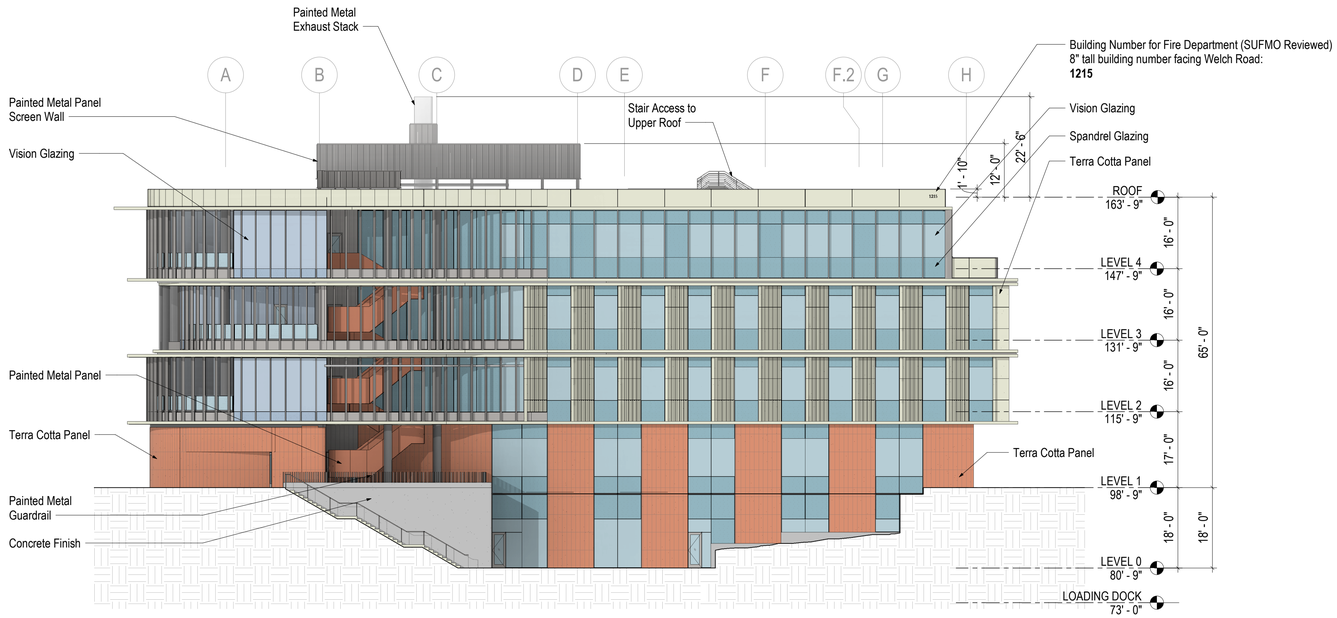

1 ASA-A3.04 **WEST ELEVATION ASA**
1/16" = 1'-0"

MATERIAL LEGEND

WINDOWS, DOORS & FRAMES

- VISION GLAZING
- SPANDREL GLAZING
- PAINTED ALUMINUM

EXTERIOR WALLS

- TERRA COTTA PANEL RAINSCREEN ASSEMBLY
- TERRA COTTA PANEL RAINSCREEN ASSEMBLY

TRIM

- PAINTED METAL PANEL

ARCHITECTURAL ACCENTS

- PAINTED METAL PANEL
- PAINTED METAL PANEL

ZGF
ZIMMER GUNSUL FRASCA ARCHITECTS LLP

DENVER
LOS ANGELES
NEW YORK
PORTLAND
SEATTLE
WASHINGTON, DC
VANCOUVER, BC

1223 SW Washington Street
Suite 200
Portland, OR 97205
503.224.3860
www.zgf.com

ZGF Project Number P26717.wrss

Consultant

Full Design Team Roster on Cover Sheet

Client and Project Information

Stanford MEDICINE

1215 Welch Road

Original Issue
ASA SUBMITTAL 12.06.2024

Revisions
RESUBMITTAL 02.28.2025

Key Plan and Orientation

Sheet Status

Sheet Title
ELEVATIONS,
EXTERIOR EW

Sheet Number
ASA-A3.04

Current Issue
ASA SUBMITTAL

Current Issue Date
12.06.2024

Sheet Size: 24 x 36

2" 1" 0"