Fire Department Notes

- THIS PROJECT IS LOCATED WITHIN THE DESIGNATED "WILDLAND-URBAN INTERFACE FIRE ZONE. THE BUILDING CONSTRUCTION SHALL COMPLY WITH THE PROVISIONS OF CRC R337 (CALIFORNIA RESIDENTIAL CODE) & CBC CHAPTER 7A CALIFORNIA BUILDING CODE
- THE PROPERTY SHALL BE IN A COMPLIANCE WITH THE VEGETATION MANAGEMENT REQUIREMENTS PRESCRIBED IN THE CALIFORNIA BUILDING CODE CBC SECTION 701A.3.2.4, FIRE CODE SECTION 4906, INCLUDING CALIFORNIA PUBLIC RESOURCES CODE 4291 OR CALIFORNIA GOVERNMENT CODE SECTION 51182 PER CRC R337.1.5.
- **FIRE SPRINKLERS REQUIRED :** AN AUTOMATIC RESIDENTIAL FIRE SPRINKLER SYSTEM SHALL BE INSTALLED IN ONE- AND TWO-FAMILY DWELLINGS AS FOLLOWS:
IN ALL NEW ONE- AND TWO-FAMILY DWELLING AND IN EXISTING ONE- AND TWO-FAMILY DWELLINGS WHEN ADDITIONS ARE MADE THAT INCREASE THE BUILDING AREA TO MORE THAN 3,600 SQUARE FEET. **EXCEPTION:** A ONE-TIME ADDITION TO AN EXISTING BUILDING THAT DOES NOT TOTAL MORE THAN 1,000 SQUARE FEET OF BUILDING AREA. **NOTE:** THE OWNER(S), OCCUPANT(S) AND ANY CONTRACTOR(S) OR SUBCONTRACTOR(S) ARE RESPONSIBLE FOR CONSULTING WITH THE WATER PURVEYOR OF RECORD IN ORDER TO DETERMINE IF ANY MODIFICATION OR UPGRADE OF THE EXISTING WATER SERVICE IS REQUIRED. A STATE OF CALIFORNIA LICENSED (C-16) FIRE PROTECTION CONTRACTOR SHALL SUBMIT PLANS, CALCULATIONS, A COMPLETED PERMIT APPLICATION AND APPROPRIATE FEES TO THIS DEPARTMENT FOR REVIEW AND APPROVAL PRIOR TO BEGINNING THEIR WORK. CRC SEC 313.2 AS ADOPTED AND AMENDED BY LAHMC.
- **APPROVED AUTOMATIC RESIDENTIAL FIRE SPRINKLER SYSTEM :** SHALL BE INSTALLED IN ONE- AND TWO-STORY FAMILY DWELLINGS, AND SHALL BE DESIGNED AND INSTALLED PER NFPA 13D 2016 EDITION FOR ALL STRUCTURES.
- **WATER SUPPLY REQUIREMENTS :** POTABLE WATER SUPPLIES SHALL BE PROTECTED FROM CONTAMINATION CAUSED BY FIRE PROTECTION SUPPLIES. IT IS THE RESPONSIBILITY OF THE APPLICANT AND ANY CONTRACTORS AND SUBCONTRACTORS TO CONTACT THE WATER PURVEYOR SUPPLYING THE SITE OF SUCH PROJECT, AND TO COMPLY WITH THE REQUIREMENTS OF THAT PURVEYOR. SUCH REQUIREMENT SHALL BE INCORPORATED INTO THE DESIGN OF ANY WATER-BASED FIRE PROTECTION SYSTEMS, AND / OR FIRE SUPPRESSION WATER SYSTEMS OR STORAGE CONTAINERS THAT MAY BE PHYSICALLY CONNECTED IN ANY MANNER TO AN APPLIANCE CAPABLE OF CAUSING CONTAMINATION OF THE POTABLE WATER SUPPLY OF THE PURVEYOR OF RECORD. FINAL APPROVAL OF THE SYSTEM(S) UNDER CONSIDERATION WILL NOT BE GRANTED BY THIS OFFICE UNTIL COMPLIANCE WITH THE REQUIREMENTS OF THE WATER PURVEYOR OF RECORD ARE DOCUMENTED BY THAT PURVEYOR AS HAVING BEEN MET BY THE APPLICANT(S), 2016 CFC 903.3.5 AND HEALTH AND SAFETY CODE 13114.7.
- **FIRE APPARATUS (ENGINE) ACCESS DRIVEWAY REQUIRED :** PROVIDE AN ACCESS DRIVEWAY WITH A PAVED ALL WEATHER SURFACE, **A MINIMUM UNOBSTRUCTED WIDTH OF 14 FEET,** VERTICAL CLEARANCE OF 13 FEET 6 INCHES, MINIMUM CIRCULATING TURNING RADIUS OF 36 FEET OUTSIDE AND 23 FEET INSIDE, AND A MAXIMUM SLOPE OF 15%. INSTALLATIONS SHALL CONFORM TO FIRE DEPARTMENT STANDARD DETAILS AND SPECIFICATIONS SHEET D-1. CFC SEC 503.
- **ADDRESS IDENTIFICATION :** NEW AND EXISTING BUILDINGS SHALL HAVE APPROVED ADDRESS NUMBERS, BUILDING NUMBERS OR APPROVED BUILDING IDENTIFICATION PLACED IN A POSITION THAT IS PLAINLY LEGIBLE AND VISIBLE FROM THE STREET OR ROAD FRONTING THE PROPERTY. THESE NUMBERS SHALL CONTRAST WITH THEIR BACKGROUND. WHERE REQUIRED BY THE FIRE OFFICIAL, ADDRESS NUMBERS SHALL BE PROVIDED IN ADDITIONAL APPROVED LOCATIONS TO FACILITATE EMERGENCY RESPONSE. ADDRESS NUMBERS SHALL BE ARABIC NUMBERS OR ALPHABETICAL LETTERS. NUMBERS SHALL BE A MINIMUM OF 4 INCHES (101.6mm) HIGH WITH A MINIMUM STROKE WIDTH OF 0.5 INCH (12.7mm). WHERE ACCESS IS BY MEANS OF A PRIVATE ROAD AND THE BUILDING CANNOT BE VIEWED FROM THE PUBLIC WAY, A MONUMENT, POLE OR OTHER SIGN OR MEANS SHALL BE USED TO IDENTIFY THE STRUCTURE. ADDRESS NUMBERS SHALL BE MAINTAINED. CFC SEC 505.1.
- **CONSTRUCTION SITE FIRE SAFETY :** ALL CONSTRUCTION SITES MUST COMPLY WITH APPLICABLE PROVISIONS OF THE CFC CHAPTER 33 AND OUR STANDARD DETAIL AND SPECIFICATION SI-7. CFC CHP 33.

Deferred Approvals

DEFERRED APPROVALS ARE SUBJECT TO CITYS APPROVAL

- FIRE SPRINKLER SYSTEM TO BE SUBMITTED AND APPROVED UNDER A SEPARATE PERMIT.

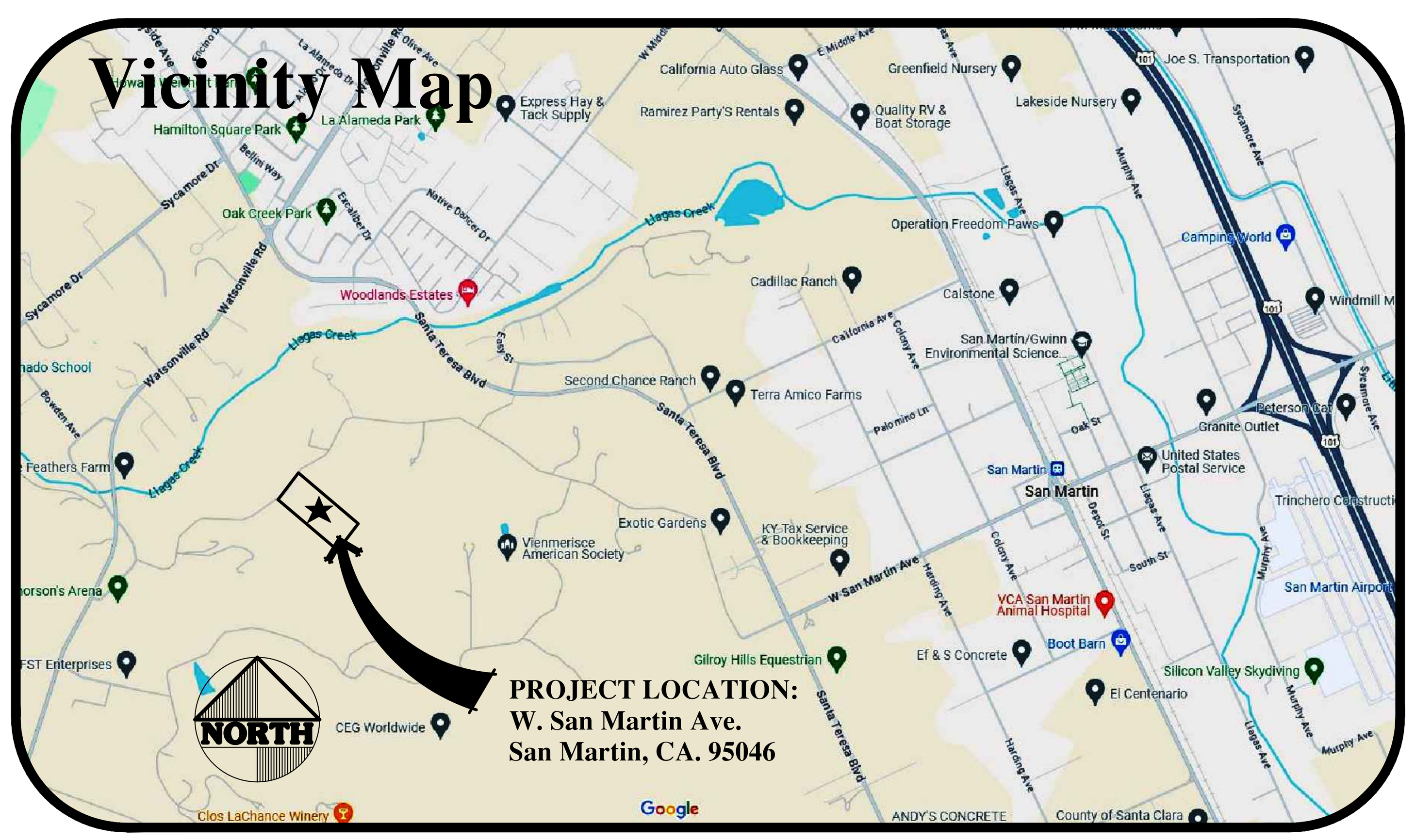

Basis of Design

- ALL WORK TO BE IN CONFORMANCE WITH:

CBC	CALIFORNIA BUILDING CODE	2022 EDITION
CRC	CALIFORNIA RESIDENTIAL CODE	2022 EDITION
CEC	CALIFORNIA ELECTRICAL CODE	2022 EDITION
CENC	CALIFORNIA ENERGY CODE	2022 EDITION
CFC	CALIFORNIA FIRE CODE	2022 EDITION
CMC	CALIFORNIA MECHANICAL CODE	2022 EDITION
CPC	CALIFORNIA PLUMBING CODE	2022 EDITION
CGC	CALIFORNIA GREEN BUILDING STANDARD	2022 EDITION
ASCE	AMERICAN SOCIETY OF CIVIL ENGINEERS 7-22	
ACI	AMERICAN CONCRETE INSTITUTE	318-19

AND ALL PERTINENT LOCAL CODES AND ORDINANCES.

General Notes

- ALL WRITTEN DIMENSIONS SHALL TAKE PRECEDENCE OVER SCALED DIMENSIONS. ANY DISCREPANCIES SHALL BE BROUGHT TO THE ATTENTION OF STOTLER DESIGN GROUP PRIOR TO COMMENCING.
- VERIFY LOCATION OF UTILITIES AND EXISTING CONDITIONS AT SITE PRIOR TO CONSTRUCTION AND BIDDING.
- CONTRACTOR ASSUMES FULL RESPONSIBILITY FOR METHOD AND MANNER OF CONSTRUCTION AND FOR ALL JOB SITE SAFETY DURING CONSTRUCTION.
- SEPARATE PERMITS ARE REQUIRED FOR OCCUPANCY AND ALL FUTURE TENANT IMPROVEMENTS. SEPARATE PERMITS ARE REQUIRED FOR MECHANICAL, ELECTRICAL & PLUMBING WORK.
- ALL WORK APPLIANCES AND EQUIPMENT SHALL COMPLY WITH C.E.C. TITLE 24 RESIDENTIAL ENERGY STANDARDS.
- THE BUILDER SHALL PROVIDE THE BUILDING OWNER, MANAGER, AND THE ORIGINAL OCCUPANTS A LIST OF THE ENERGY-SAVING CONSERVATION FEATURES DEVICES, MATERIALS, AND COMPONENTS INSTALLED IN THE BUILDING, AND INSTRUCTIONS ON HOW TO USE THEM EFFICIENTLY, SUCH FEATURES INCLUDE HEATING, COOLING, WATER HEATING AND LIGHTING SYSTEMS, AS WELL AS INSULATION, WEATHERSTRIPPING WINDOW SHADES, AND THERMAL MASS MATERIALS, THE INSTRUCTIONS SHALL BE CONSISTENT WITH SPECIFICATIONS SET FORTH BY THE EXECUTIVE DIRECTOR.
- THE USE OF THESE PLANS AND SPECIFICATIONS SHALL BE RESTRICTED TO THE ORIGINAL SITE FOR WHICH THEY WERE PREPARED AND PUBLICATION THEREOF IS EXPRESSLY LIMITED TO SUCH USE. RE-USE, REPRODUCTION, OR PUBLICATION BY ANY METHOD, IN WHOLE OR IN PART, IS PROHIBITED. TITLE TO THE PLANS AND SPECIFICATIONS REMAINS WITH THE DESIGNER, WITHOUT PREJUDICE, VISUAL CONTACT WITH THESE PLANS AND SPECIFICATIONS SHALL CONSTITUTE PRIMA FACIE EVIDENCE OF THE ACCEPTANCE OF THESE RESTRICTIONS.
- ALL EARTHWORK AND SITE DRAINAGE, INCLUDING DRILLED PIER, SPREAD FOOTING, AND MAT SLAB EXCAVATIONS, SWIMMING POOL EXCAVATION, SUBGRADE PREPARATION BENEATH HARDSCAPE, PLACEMENT AND COMPACTION OF ENGINEERED FILL BENEATH HARDSCAPE, UTILITY TRENCH BACKFILL, AND INSTALLATION OF SURFACE AND SUBSURFACE DRAINAGE SHOULD BE PERFORMED IN ACCORDANCE WITH THE RECOMMENDATIONS OF THE GEOTECHNICAL REPORT. ALL INSPECTIONS SHOULD BE SCHEDULED AT LEAST 48 HOURS ADVANCE NOTIFICATION OF ANY EARTHWORK OPERATIONS AND SHOULD BE PRESENT TO OBSERVE AND/OR TEST AS NECESSARY THE EARTHWORK AND FOUNDATION INSTALLATION PHASES OF THE PROJECT.
- RECYCLE AND/OR SALVAGE FOR REUSE A MINIMUM 65 PERCENT OF THE NONHAZARDOUS CONSTRUCTION AND DEMOLITION WASTE.
- WORK IN THE PUBLIC RIGHT-OF-WAY AREA REQUIRES ENCROACHMENT PERMIT.
- "J" NUMBER TO BE OBTAINED FROM BAY AREA AIR QUALITY MANAGEMENT DISTRICT FOR DEMOLITION OF EXISTING HOUSE.

Scope of Work:

CONSTRUCT A NEW 2-STORY SINGLE FAMILY RESIDENCE WITH BASEMENT, ATTACHED GARAGE. DETACHED ADU

Consultants

SURVEY / CIVIL ENGINEER
LC Engineering
598 E Santa Clara Street, Suite #270
San Jose, California 95112
(408) 806-7187
nle@lcengineering.net

Drawing Index

T1 Title Sheet
T1.1 Floor Area Ratio Diagrams

SURVEY
1 Boundary Map and Topographic Survey

CIVIL
C1 Overall Site Plan
C2 Demolition Plan
C3 Grading & Drainage Plan
C4 Grading & Drainage Plan
C5 Building Cross Sections
C6 Building Cross Sections
C7 Utility Plan
C9 Erosion Control Details
C10 Erosion Control Details

ARCHITECTURAL
A1.1 Overall Site Plan
A1.2 Enlarged Partial Site Plan
A2 Entry Level Floor Plan
A3 2nd Level Floor Plan
A4 Basement Level Floor Plan
A5.1 Exterior Elevations
A5.2 Exterior Elevations
A6 Cross Sections
A7 Roof Plan
A8.1 ADU - Floor Plan, Roof Plan
A8.2 ADU - Exterior Elevations & Cross Sections

Project Data - Santa Clara County

Owner Data

Prith Banerjee
955 Woodgrove Ln
San Jose, California 95136

Lot Data

A.P.N.:	779-47-004
Lot Size:	20.00 acres Gross, 19.540 acres Net
Property Submittal Location:	Santa Clara County
Existing Uses:	Single Family Residence
Zoning District:	HS-d1
Supervisor District:	1
Occupancy Groups:	R-3/U
Type Of Construction:	V-B
Stories:	2
HCP Rural Development Area:	In
Water Supply:	Local Shared
Fire Sprinklers :	Yes, NFPA 13D
Fire Sprinkler Water Supply :	Tanks & Pumps
Fire Responsibility Area:	SRA
Cal Fire SRA Hazard Class:	High
Wildland Urban Interface:	Yes
Fire Protection District:	SSCCFPD
Geohazard:	County Landslide Hazard Zone
FEMA Flood Zone:	D
Slope at Building Site:	- %
Average Site Slope:	- %
Allowable Floor Area:	- sq.ft. - %
Allowable Building Coverage:	- sq.ft. - %
Site Setbacks:	
Front:30'	Side (1st flr): 30' Rear: 30'
	Side (2nd flr): -'
Maximum Building Height:	35'

Proposed Conditions

Entry Level Living Area :	3797 sq.ft.
2nd Level Living Area	1052 sq.ft.
Basement Level Living Area	1495 sq.ft.
Total Living Area :	**6344** sq.ft.
Garage Area :	774 sq.ft.
Covered Porch Area :	186 sq.ft.
Total Coverage Area :	**960** sq.ft.
Total Building Coverage Area :	**4757** sq.ft.
ADU Residence :	**1200** sq.ft.

Private Residence

New Single Family Residence and ADU

San Martin, California 95046

West San Martin Avenue

stotler design group
LOS ALTOS , CALIFORNIA 94022
PHONE: (408) 309-2163
Email: Scott@StotlerDesignGroup.com

THE USE OF THESE PLANS AND SPECIFICATIONS SHALL BE RESTRICTED TO THE ORIGINAL SITE FOR WHICH THEY WERE PRE-PARED AND PUBLICATION THEREOF IS EXPRESSLY LIMITED TO SUCH USE. RE-USE, REPRODUCTION, OR PUBLICATION BY ANY METHOD, IN WHOLE OR IN PART, IS PROHIBITED. TITLE TO THE PLANS AND SPECIFICATIONS REMAINS WITH THE DESIGNER, WITHOUT PREJUDICE, VISUAL CONTACT WITH THESE PLANS AND SPECIFICATIONS SHALL CONSTITUTE PRIMA FACIE EVIDENCE OF THE ACCEPTANCE OF THESE RESTRICTIONS. WRITTEN DIMENSIONS SHALL TAKE PREFERENCE OVER SCALED DIMENSIONS AND SHALL BE VERIFIED ON THE JOB SITE. ANY DISCREPANCY SHALL BE BROUGHT TO THE ATTENTION OF THE DESIGNER PRIOR TO THE COMMENCEMENT OF ANY WORK.

REVISIONS	
Arch Review	12-03-24

DRAWING TITLE	Title Sheet
JOB TITLE	Private Residence
JOB ADDRESS	Parcel #20 San Martin Ave. San Martin, California 95046
DATE	Dec 03, 2024
SCALE	None
PROJECT MANAGER	S. Stotler
DRAWN	SDG
JOB NO.	2305
SHEET	T1

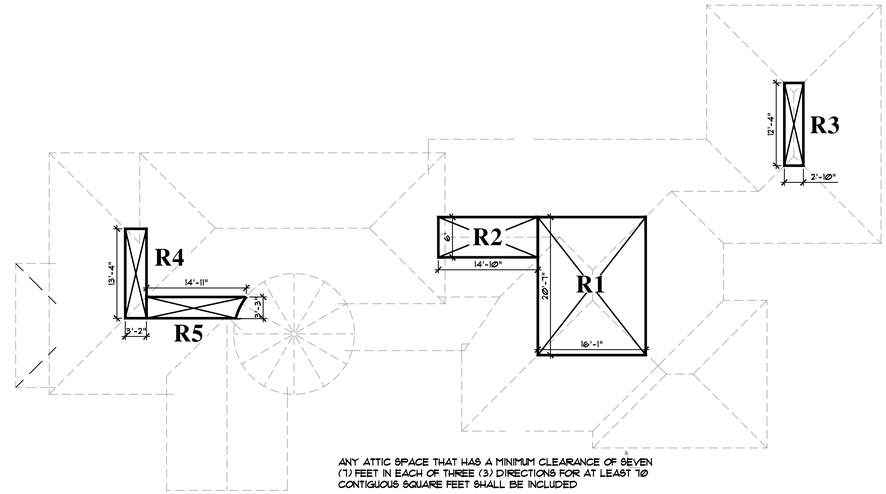

ANY ATTIC SPACE THAT HAS A MINIMUM CLEARANCE OF SEVEN (7) FEET IN EACH OF THREE (3) DIRECTIONS FOR AT LEAST 70 CONTIGUOUS SQUARE FEET SHALL BE INCLUDED

Main Residence - Attic Level

scale: 3/32=1'-0"

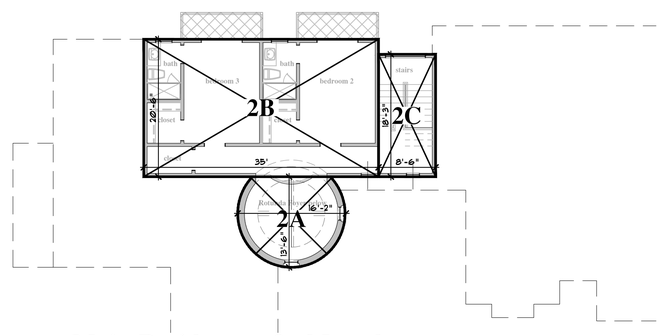

Main Residence - 2nd Level

scale: 3/32=1'-0"

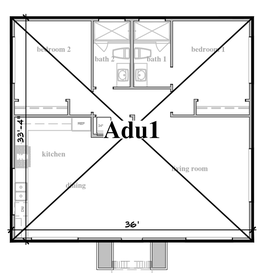

ADU Residence

scale: 3/32=1'-0"

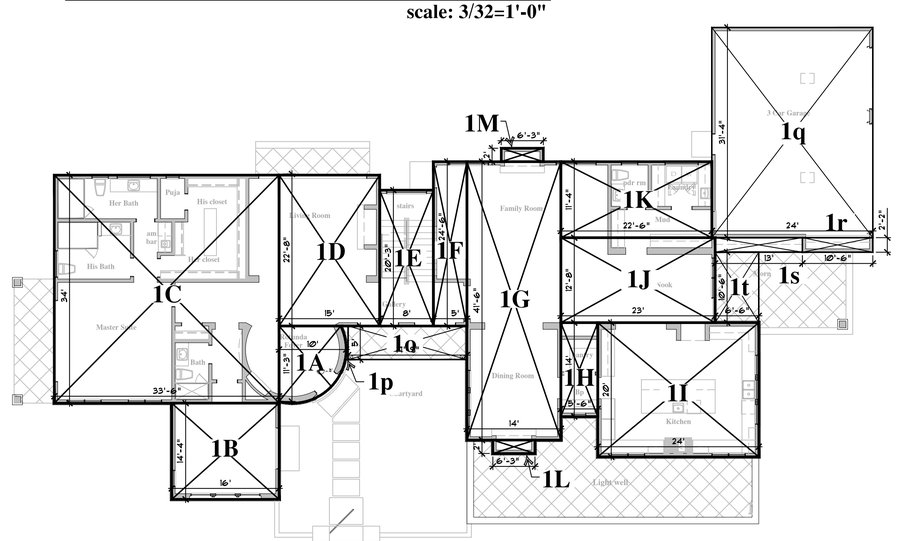

Main Residence - 1st Level

scale: 3/32=1'-0"

Floor Area Ratio Calculations

Section	Dimensions	Area (sf.ft.)
Living Area		
1st Level		
1A	10'-0" x 11'-3" (*)	100
1B	16'-0" x 14'-4"	229
1C	33'-6" x 34'-0"	1139
1D	15'-0" x 22'-8"	337
1E	8'-0" x 20'-3"	162
1F	5'-0" x 24'-6"	122
1G	14'-0" x 41'-6"	581
1H	5'-6" x 14'-0"	77
1I	24'-0" x 20'-0"	480
1J	23'-0" x 12'-8"	291
1K	22'-6" x 31'-4"	255
1L	6'-3" x 2'-0"	12
1M	6'-3" x 2'-0"	12
1o - Covered Terrace	17'-9" x 5'-0"	88
1p - Covered Terrace	0'-6" x 5'-0"	2
1q - Garage	24'-0" x 31'-4"	752
1r - Garage	10'-6" x 2'-2"	22
1s - Covered Terrace	13'-0" x 2'-2"	28
1t - Covered Terrace	6'-6" x 10'-6"	68
2nd Level		
2A	10'-0" x 11'-3" (*)	180
2B	16'-0" x 14'-4"	717
2C	33'-6" x 34'-0"	155
(*) - non-conforming rectangle		
Subtotal		**5809**
Attic Space Area 7' tall		
R1	16'-1" x 20'-7"	331
R2	14'-10" x 6'-0" (**)	-
R3	2'-10" x 12'-4" (**)	-
R4	3'-2" x 13'-4" (**)	-
R5	14'-11" x 3'-3" (**)	-
(**) - non-conforming to 7' tall, 7' wide, 70 sqft cont. (exempt to FAR)		
Subtotal		**331**
Space Above 15' Area		
-	-	0
-	-	0
Subtotal		**0**
ADU Residence Area		
Adu1	36'-0" x 33'-4"	1200
Credit of 1200 sq.ft.		-1200
Subtotal		**0**
Total Proposed FAR		**6140**

stotler design group

LOS ALTOS , CALIFORNIA 94022
PHONE: (408) 309-2163
Email: Scott@StotlerDesignGroup.com

WITHOUT PREJUDICE. VISUAL CONTACT WITH THESE PLANS AND SCALED DIMENSIONS AND SHALL BE VERIFIED ON THE JOB SITE. WRITTEN DIMENSIONS SHALL TAKE PREFERENCE OVER ANY DISCREPANCY SHALL BE BROUGHT TO THE ATTENTION THE DESIGNER IMMEDIATELY. ALL IDEAS, DESIGNS, ARRANGEMENTS AND PLANS AND SPECIFICATIONS SHALL BE PARED AND PUBLICATION THEREOF IS EXPRESSLY LIMITED TO SUCH USE. RE-USE, REPRODUCTION OR PUBLICATION BY ANY METHOD OR MANNER IN PART, IS PROHIBITED. TITLE TO THE PLANS AND SPECIFICATIONS REMAINS WITH THE DESIGNER. RESTRICTED TO THE ORIGINAL SITE FOR WHICH THEY WERE PREPARED FOR THE DESIGNER PRIOR TO THE COMMENCEMENT OF ANY WORK.

REVISIONS

Arch Review	12-03-24

DRAWING TITLE: **Floor Area Ratio Diagrams**

JOB TITLE: Private Residence

JOB ADDRESS: Parcel #20 San Martin Ave. San Martin, California 95046

DATE	Dec 03, 2024
SCALE	As Noted
PROJECT MANAGER	S. Stotler
DRAWN	Maw
JOB NO.	2305
SHEET	T1.1

C:\Dropbox\Projects\2023\2305-Banerjee\2305-T1.1.dwg, 12/20/2024 4:19:33 PM

LEGEND & ABBREVIATIONS

- BENCHMARK
- BORDER LINE
- BOUNDARY
- BUILDING OUTLINE
- CATCH BASIN
- CENTERLINE
- PAVED
- BRICK
- CONCRETE
- 69 — EXISTING CONTOUR
- EASEMENT LINE
- E — ELECTRICAL METER
- +70.69 OR (70.69) — EXISTING ELEVATION
- EXISTING CHAIN LINK FENCE
- EXISTING WOOD FENCE
- 10" — EXISTING TREE AND DIAMETER
- FLOW LINE
- GM — GAS METER
- GUY POLE
- GUY WIRE ANCHOR
- EXISTING HYDRANT
- JOINT POLE
- LIGHT POST
- M — MANHOLE
- STREET MONUMENT
- PROPERTY CORNER MONUMENT
- MONUMENT LINE
- PARCEL LINE / RIGHT OF WAY
- UB — PGE BOX
- TEL — TELECOMMUNICATION BOX
- 4"o — PVC PIPE AND DIAMETER
- C — SANITARY SEWER CLEAN OUT
- S — SANITARY SEWER MANHOLE
- D — STORM DRAIN MANHOLE
- SETBACK LINE
- STREET SIGN
- 10" — TREE STUMP AND DIAMETER
- W — UTILITY: EXISTING
- W — WATER METER
- WATER VALVE
- B — BOLLARD
- AD — AREA DRAIN
- MB — MAIL BOX
- STUMP

AC	ASPHALT CONCRETE/AIR CONDITIONER
AD	AREA DRAIN
APN	ASSESSOR'S PARCEL NUMBER
BD	BRASS DISC
BLDG	BUILDING
BOL	BOLLARD
BRC	BACK OF ROLLED CURB
BSL	BUILDING SETBACK LINE
BWK	BACK OF WALK
BWV	BACKFLOW WATER VALVE
CB	CATCH BASIN
CG	CURB & GUTTER
℄	CENTERLINE
CLF	CHAIN LINK FENCE
CLM	COLUMN
CONC	CONCRETE
COR	CORNER
DWY	DRIVEWAY
EA	EASEMENT
EC	EDGE OF CONCRETE
ELEV	ELEVATION
EM	ELECTRIC METER
E(OH)	ELECTRIC OVERHEAD
E(UG)	ELECTRIC UNDERGROUND
EP	EDGE OF PAVEMENT
EX	EXISTING
FF	FINISH ELEVATION OF SUBFLOOR
FG	GROUND FINISH GRADE
FH	FIRE HYDRANT
FL	FLOW LINE
G	GAS LINE
GAR	GARAGE SLAB ELEVATION
GD	GROUND
GM	GAS METER
HC	HANDICAPPED
INV	INVERT
IEE	INGRESS AND EGRESS EASEMENT
IP	IRON PIPE
IR	IRRIGATION
LD	LANDING
LIP	LIP OF GUTTER
LS	LANDSCAPED AREA
MH	MANHOLE
MW	MONUMENT WELL
PL	PROPERTY LINE
PLTR	PLANTER
PP	POWER POLE
PROP	PROPOSED / PROPERTY
PRUE	PRIVATE SERVICES AND UTILITY EASEMENT
PSDE	PRIVATE STORM DRAINAGE EASEMENT
PSE	PUBLIC SERVICE EASEMENT
PSSE	PRIVATE SANITARY SEWER EASEMENT
PUE	PUBLIC UTILITY EASEMENT
PVAE	PRIVATE VEHICLE ACCESS EASEMENT
PVMT	PAVEMENT
PWE	PRIVATE WATER EASEMENT
RC	ROLLED CURB
RW	RETAINING WALL
R/W	RIGHT OF WAY
RSE	ROAD SLOPE EASEMENT
SDE	STORM DRAIN EASEMENT
SE	SLOPE EASEMENT
SSCO	SANITARY SEWER CLEANOUT
SSE	SANITARY SEWER EASEMENT
SSMH	SANITARY SEWER MANHOLE
STLT	STREET LIGHTING BOX
SW	SIDEWALK
TE	TREE EASEMENT
TEL	TELEPHONE BOX
TW	TOP OF WALL
TYP	TYPICAL
WF	WOOD FENCE
WLE	WATER LINE EASEMENT
WLK	WALKWAY
WV	WATER VALVE

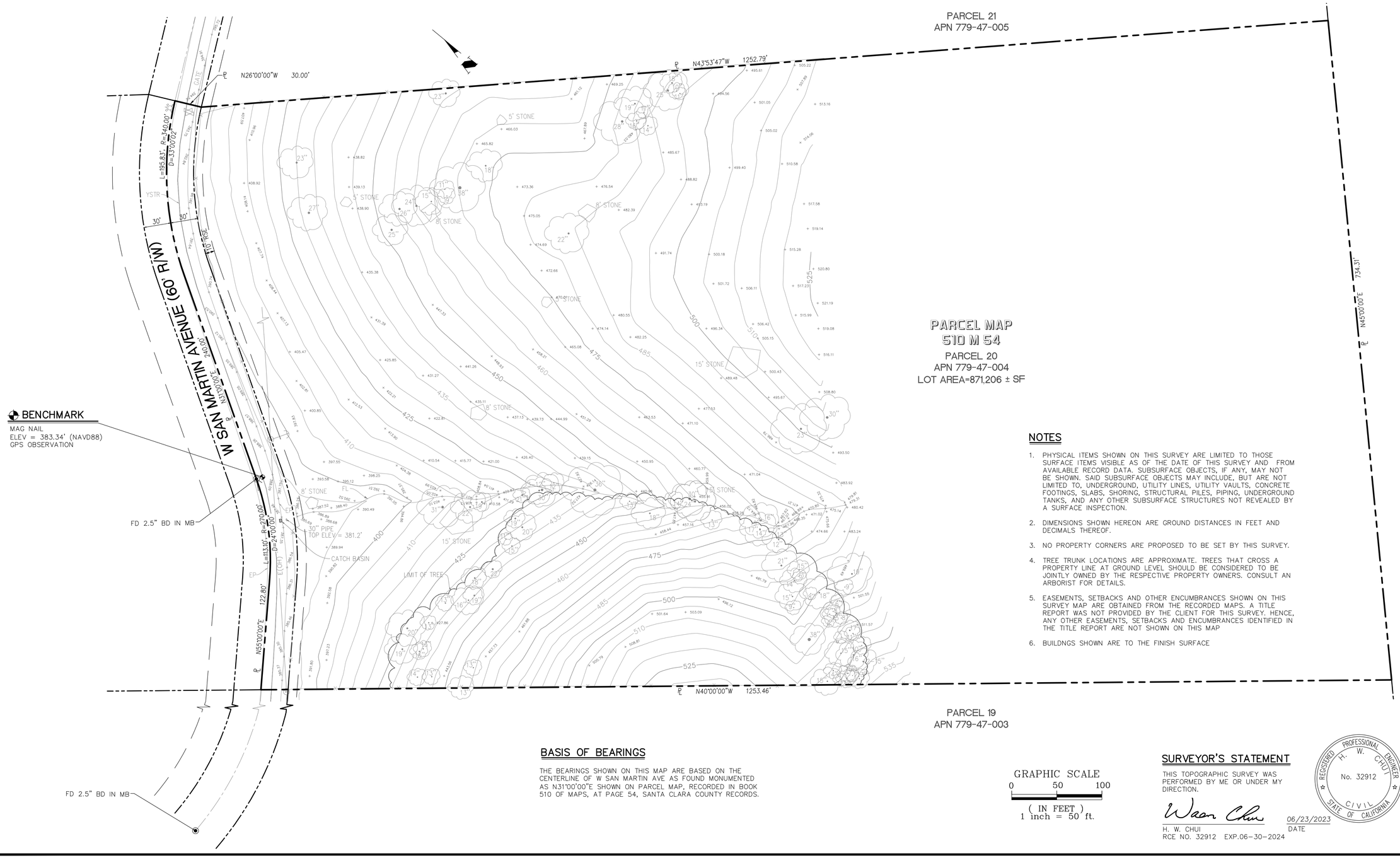

NOTES

1. PHYSICAL ITEMS SHOWN ON THIS SURVEY ARE LIMITED TO THOSE SURFACE ITEMS VISIBLE AS OF THE DATE OF THIS SURVEY AND FROM AVAILABLE RECORD DATA. SUBSURFACE OBJECTS, IF ANY, MAY NOT BE SHOWN. SAID SUBSURFACE OBJECTS MAY INCLUDE, BUT ARE NOT LIMITED TO, UNDERGROUND, UTILITY LINES, UTILITY VAULTS, CONCRETE FOOTINGS, SLABS, SHORING, STRUCTURAL PILES, PIPING, UNDERGROUND TANKS, AND ANY OTHER SUBSURFACE STRUCTURES NOT REVEALED BY A SURFACE INSPECTION.
2. DIMENSIONS SHOWN HEREON ARE GROUND DISTANCES IN FEET AND DECIMALS THEREOF.
3. NO PROPERTY CORNERS ARE PROPOSED TO BE SET BY THIS SURVEY.
4. TREE TRUNK LOCATIONS ARE APPROXIMATE. TREES THAT CROSS A PROPERTY LINE AT GROUND LEVEL SHOULD BE CONSIDERED TO BE JOINTLY OWNED BY THE RESPECTIVE PROPERTY OWNERS. CONSULT AN ARBORIST FOR DETAILS.
5. EASEMENTS, SETBACKS AND OTHER ENCUMBRANCES SHOWN ON THIS SURVEY MAP ARE OBTAINED FROM THE RECORDED MAPS. A TITLE REPORT WAS NOT PROVIDED BY THE CLIENT FOR THIS SURVEY. HENCE, ANY OTHER EASEMENTS, SETBACKS AND ENCUMBRANCES IDENTIFIED IN THE TITLE REPORT ARE NOT SHOWN ON THIS MAP
6. BUILDNGS SHOWN ARE TO THE FINISH SURFACE

BASIS OF BEARINGS

THE BEARINGS SHOWN ON THIS MAP ARE BASED ON THE CENTERLINE OF W SAN MARTIN AVE AS FOUND MONUMENTED AS N31°00'00"E SHOWN ON PARCEL MAP, RECORDED IN BOOK 510 OF MAPS, AT PAGE 54, SANTA CLARA COUNTY RECORDS.

GRAPHIC SCALE
0 50 100
(IN FEET)
1 inch = 50 ft.

SURVEYOR'S STATEMENT

THIS TOPOGRAPHIC SURVEY WAS PERFORMED BY ME OR UNDER MY DIRECTION.

Wason Chui
H. W. CHUI
RCE NO. 32912 EXP.06-30-2024

06/23/2023
DATE

REGISTERED PROFESSIONAL ENGINEER
H. W. CHUI
No. 32912
CIVIL
STATE OF CALIFORNIA

ROAD NAME : W SAN MARTIN AVENUE

NO.	REVISIONS	APP'D	DATE	BY

HN	06/23/2023
DESIGNED	DATE
HN	06/23/2023
DRAWN	DATE
1" = 50'	
SCALE	
XL	06/23/2023
CHECKED	DATE

LE ENGINEERING
598 E Santa Clara St #270
San Jose, CA 95112
Phone: (408) 806-7187

BOUNDARY MAP AND TOPOGRAPHIC SURVEY
W SAN MARTIN AVENUE
APN 779-47-004

San Martin California

PROJECT NO.
CONTRACT NO.
DRAWING NO.
SHT NO. 1 OF 1
FILE NO.

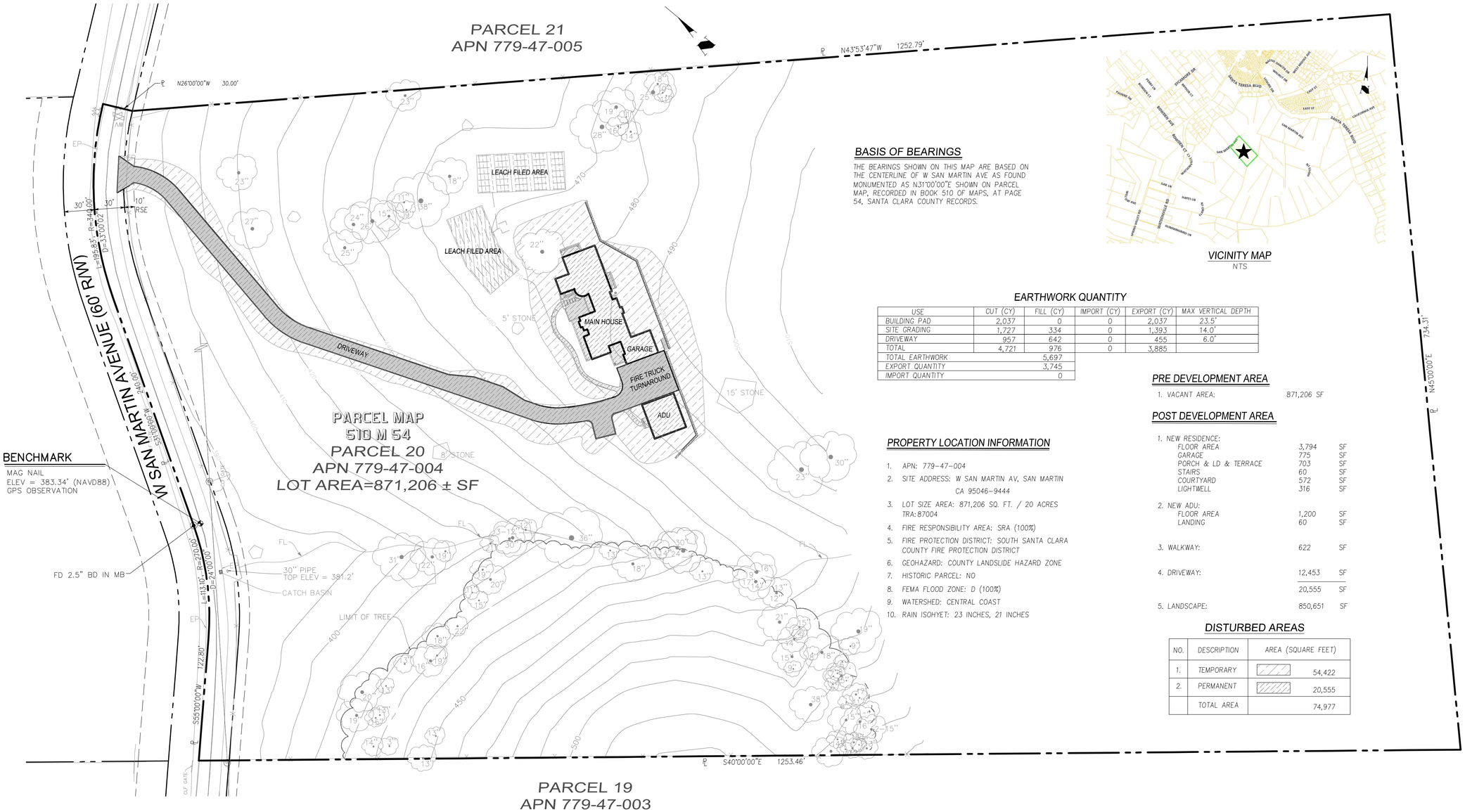

BASIS OF BEARINGS

THE BEARINGS SHOWN ON THIS MAP ARE BASED ON THE CENTERLINE OF W SAN MARTIN AVE AS FOUND MONUMENTED AS N31°00'00"E SHOWN ON PARCEL MAP, RECORDED IN BOOK 510 OF MAPS, AT PAGE 54, SANTA CLARA COUNTY RECORDS.

VICINITY MAP
NTS

EARTHWORK QUANTITY

USE	CUT (CY)	FILL (CY)	IMPORT (CY)	EXPORT (CY)	MAX VERTICAL DEPTH
BUILDING PAD	2,037	0	0	2,037	23.5'
SITE GRADING	1,727	334	0	1,393	14.0'
DRIVEWAY	957	642	0	455	6.0'
TOTAL	4,721	976	0	3,885	
TOTAL EARTHWORK		5,697			
EXPORT QUANTITY		3,745			
IMPORT QUANTITY		0			

PRE DEVELOPMENT AREA

1. VACANT AREA: 871,206 SF

POST DEVELOPMENT AREA

1. NEW RESIDENCE:		
FLOOR AREA	3,794	SF
GARAGE	775	SF
PORCH & LD & TERRACE	703	SF
STAIRS	60	SF
COURTYARD	572	SF
LIGHTWELL	316	SF
2. NEW ADU:		
FLOOR AREA	1,200	SF
LANDING	60	SF
3. WALKWAY:	622	SF
4. DRIVEWAY:	12,453	SF
	20,555	SF
5. LANDSCAPE:	850,651	SF

PROPERTY LOCATION INFORMATION

1. APN: 779-47-004
2. SITE ADDRESS: W SAN MARTIN AV, SAN MARTIN CA 95046-9444
3. LOT SIZE AREA: 871,206 SQ. FT. / 20 ACRES TRA: 87004
4. FIRE RESPONSIBILITY AREA: SRA (100%)
5. FIRE PROTECTION DISTRICT: SOUTH SANTA CLARA COUNTY FIRE PROTECTION DISTRICT
6. GEOHAZARD: COUNTY LANDSLIDE HAZARD ZONE
7. HISTORIC PARCEL: NO
8. FEMA FLOOD ZONE: D (100%)
9. WATERSHED: CENTRAL COAST
10. RAIN ISOHYET: 23 INCHES, 21 INCHES

DISTURBED AREAS

NO.	DESCRIPTION	AREA (SQUARE FEET)
1.	TEMPORARY	54,422
2.	PERMANENT	20,555
	TOTAL AREA	74,977

ABBREVIATIONS

- AREA DRAIN
- BENCHMARK
- BOUNDARY
- CB CATCH BASIN
- CLF FENCE
- COBBLE ROCK ENERGY DISSIPATOR
- CONCRETE
- 550 EXISTING CONTOUR AFTER GRADING
- 550 ORIGINAL GROUND PRIOR TO GRADING
- 100.46 DESIGN GRADE
- DOWNSPOUT WITH SPLASHBLOCK
- DE DRAINAGE EMITTER
- DIV DIVERSION VALVE
- BACKWATER VALVE
- BENCHMARK
- DRAINAGE SWALE
- EASEMENT LINE
- +101.70 OR (101.70) EXISTING ELEVATION
- EXISTING TREE TO BE REMOVED
- EXISTING TREE TO REMAIN
- FOUND IRON PIPE AT PROPERTY CORNER
- FIBER ROLLS
- GM GAS METER
- GV GAS VALVE
- GRADE TO DRAIN
- GUY POLE
- GUY WIRE ANCHOR
- HIGH POINT
- HYDRANT: EXISTING
- HYDRANT: PROPOSED
- INLET
- JOINT POLE
- LIGHTING
- LIGHTING POLE
- LOW POINT
- OVERLAND FLOW DIRECTION
- PGE PGE BOX
- BMP POST CONSTRUCTION STORM WATER POLLUTION CONTROL MEASURE
- PROJECT SITE
- RETAINING WALL
- RIGHT OF WAY
- CO SANITARY SEWER CLEAN OUT MANHOLE
- SS SANITARY SEWER MANHOLE
- SD STORM DRAIN MANHOLE
- SUMP PUMP
- TEL TELEPHONE BOX
- TV TELEVISION BOX
- TP TEST PIT
- TOP OF FILL
- TOE OF FILL
- TOP OF CUT
- TOE OF CUT
- 1 TREE NUMBER
- T T-VAULT
- W UTILITY: EXISTING
- W UTILITY: PROPOSED OR NEW
- WM WATER METER
- WV WATER VALVE
- W WELL
- WOOD FENCE

LEGEND

AB	AGGREGATE BASE	E(OH)	ELECTRIC OVERHEAD	N&S	NAIL AND SILVER	SS	SANITARY SEWER/LATERAL
AC	ASPHALT CONCRETE	E(UG)	ELECTRIC UNDERGROUND	NTS	NOT TO SCALE	SSE	SANITARY SEWER EASEMENT
AD	AREA DRAIN	EP	EDGE OF PAVEMENT	OH	OVERHEAD	STA	STATION
AE	ANCHOR EASEMENT	EX	EXISTING	OG	ORIGINAL GROUND	STD	STANDARD CITY DETAIL
BB	BUBBLER BOX	FC	FACE OF CURB	P	PAVEMENT FINISH GRADE	SW	SIDEWALK
BLDG	BUILDING	FD	FOUND	PAD	PAD ELEVATION	TB	TOP OF BANK
BSL	BUILDING SETBACK LINE	FF	FINISH ELEVATION OF SUBFLOOR	℄	PROPERTY LINE	TC	TOP OF CURB
BW	BOTTOM OF WALL/BACK OF WALK	FG	GROUND FINISH GRADE	PEE	PEDESTRIAN EQUESTRIAN EASEMENT	TEMP	TEMPORARY
CC	CURB & GUTTER	FH	FIRE HYDRANT	PERF	PERFORATED	TOC	TOP OF COVER
℄	CENTERLINE	FWL	FUTURE WIDTH LINE	PP	POWER POLE PROP PROPOSED	TOE	TOE OF BANK
CLF	CHAIN LINK FENCE	FL	FLOW LINE	PSE	PUBLIC SERVICE EASEMENT	TG	TOP OF GRATE
CO	SANITARY SEWER CLEANOUT	G	GARAGE SLAB ELEVATION/GAS LINE	PUE	PUBLIC UTILITY EASEMENT	TPF	TREE PROTECTION FENCE
COP	CURB OPENING	GPE	GENERAL PUBLIC EASEMENT	PVMT	PAVEMENT	TW	TOP OF WALL
CONC	CONCRETE	GSB	GRADING SETBACK	PVC	POLYVINYL CHLORIDE	TYP	TYPICAL
CSD	COUNTY STANDARD DETAIL	GM	GAS METER	R	RADIUS	VG	VALLEY GUTTER
DE	DRAINAGE EMITTER	HP	HI POINT	RW	RETAINING WALL	W	WATER
DI	DRAINAGE INLET	INV	INVERT	REM	REMOVE	WCE	WIRE CLEARANCE EASEMENT
DS	DOWNSPOUT	LIP	LIP OF GUTTER	R/W	RIGHT OF WAY	WLK	WALKWAY
DWY	DRIVEWAY	LS	LANDSCAPED AREA	S.C.V.W.D	SANTA CLARA VALLEY WATER DISTRIC	WF	WOOD FENCE
EA	EASEMENT	LSB	LEACH FIELD SETBACK LINE			WM	WATER METER
ELEV	ELEVATION	MAX	MAXIMUM	SD	STORM DRAIN	WOE	WIRE OVERHANG EASEMENT
EM	ELECTRIC METER	MH	MANHOLE	SDE	STORM DRAIN EASEMENT	WV	WATER VALVE
		MIN	MINIMUM	SE	SLOPE EASEMENT		

SHEET INDEX:

SHEET 1: OVERALL SITE PLAN
SHEET 2: DEMOLITION PLAN
SHEET 3: GRADING & DRAINAGE PLAN
SHEET 4: GRADING & DRAINAGE PLAN
SHEET 5: BUILDING CROSS SECTIONS
SHEET 6: BUILDING CROSS SECTIONS
SHEET 7: UTILITY PLAN

GRAPHIC SCALE
0 50 100
(IN FEET)
1 inch = 50 ft.

BY	DATE	REVISIONS

REGISTERED PROFESSIONAL ENGINEER N. M. LE No. 47518 CIVIL STATE OF CALIFORNIA

PRITH BANERJEE
1068 UNIVERSITY AVE, PALO ALTO, CA 94301
Tel: (847) 757 - 8708
EMAIL: PRITHBANERJEE@GMAIL.COM

LE ENGINEERING
598 E Santa Clara Ste270
San Jose, CA 95112
Phone: (408) 808-7187

SITE PLAN
W SAN MARTIN AVENUE
APN 779-47-004

SAN MARTIN CALIFORNIA

Project No.: | Designed: HP | Checked: HV | Date: 07/11/24

SHEET 1

FILE #

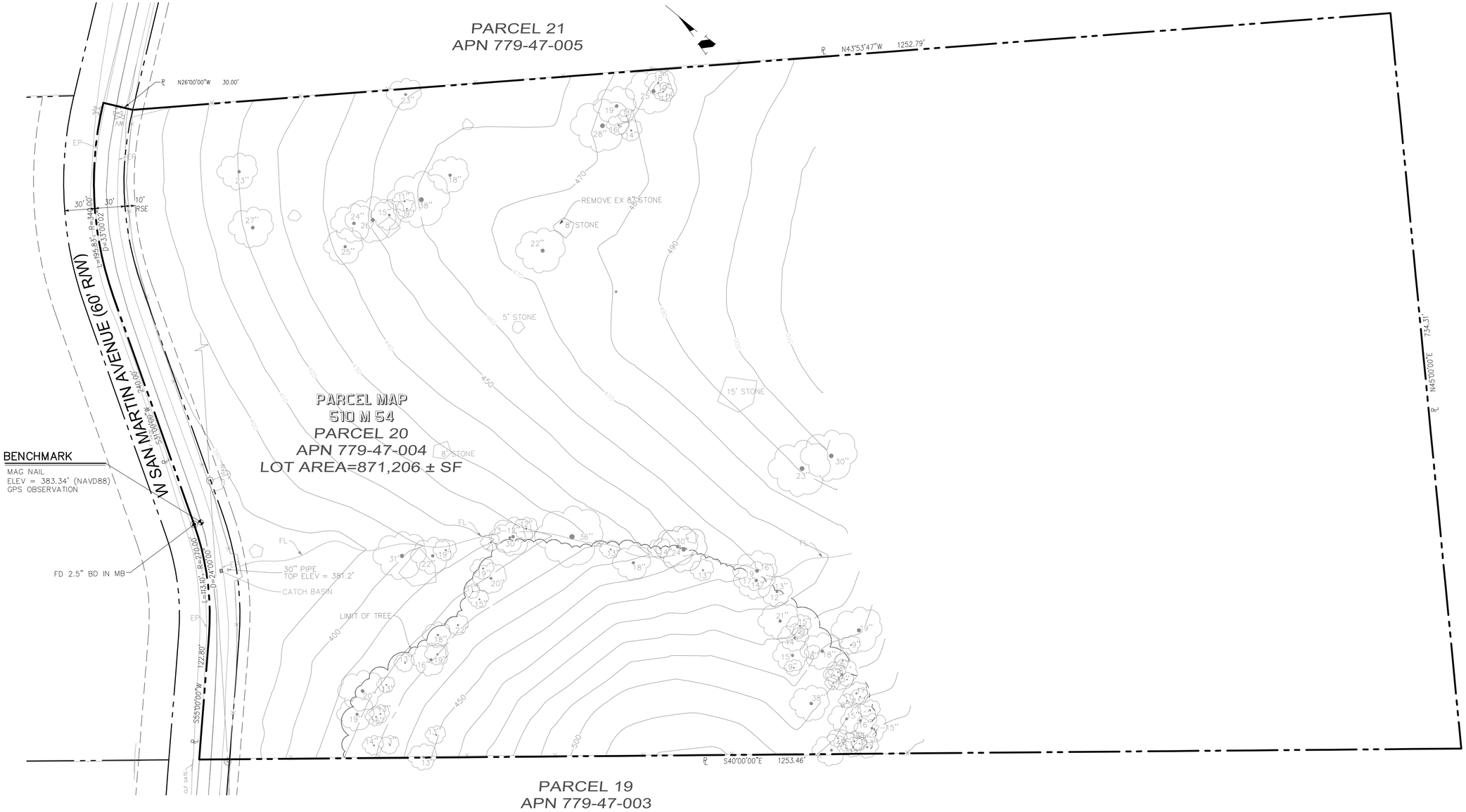

GRAPHIC SCALE
0 50 100
(IN FEET)
1 inch = 50 ft.

REVISIONS	BY	DATE

REGISTERED PROFESSIONAL ENGINEER
N. M. LE
No. 47518
CIVIL
STATE OF CALIFORNIA

PRITH BANERJEE
1068 UNIVERSITY AVE, PALO ALTO, CA 94301
Tel: (847) 757 - 8708
EMAIL: PRITHBANERJEE@GMAIL.COM

LE ENGINEERING
598 E Santa Clara Ste270
San Jose, CA 95112
Phone: (408) 806-7187

DEMOLITION PLAN
W SAN MARTIN AVENUE
APN 779-47-004

SAN MARTIN CALIFORNIA

Project No.: | Designed: HP | Checked: HV | Date: 07/11/24

SHEET
2

FILE #

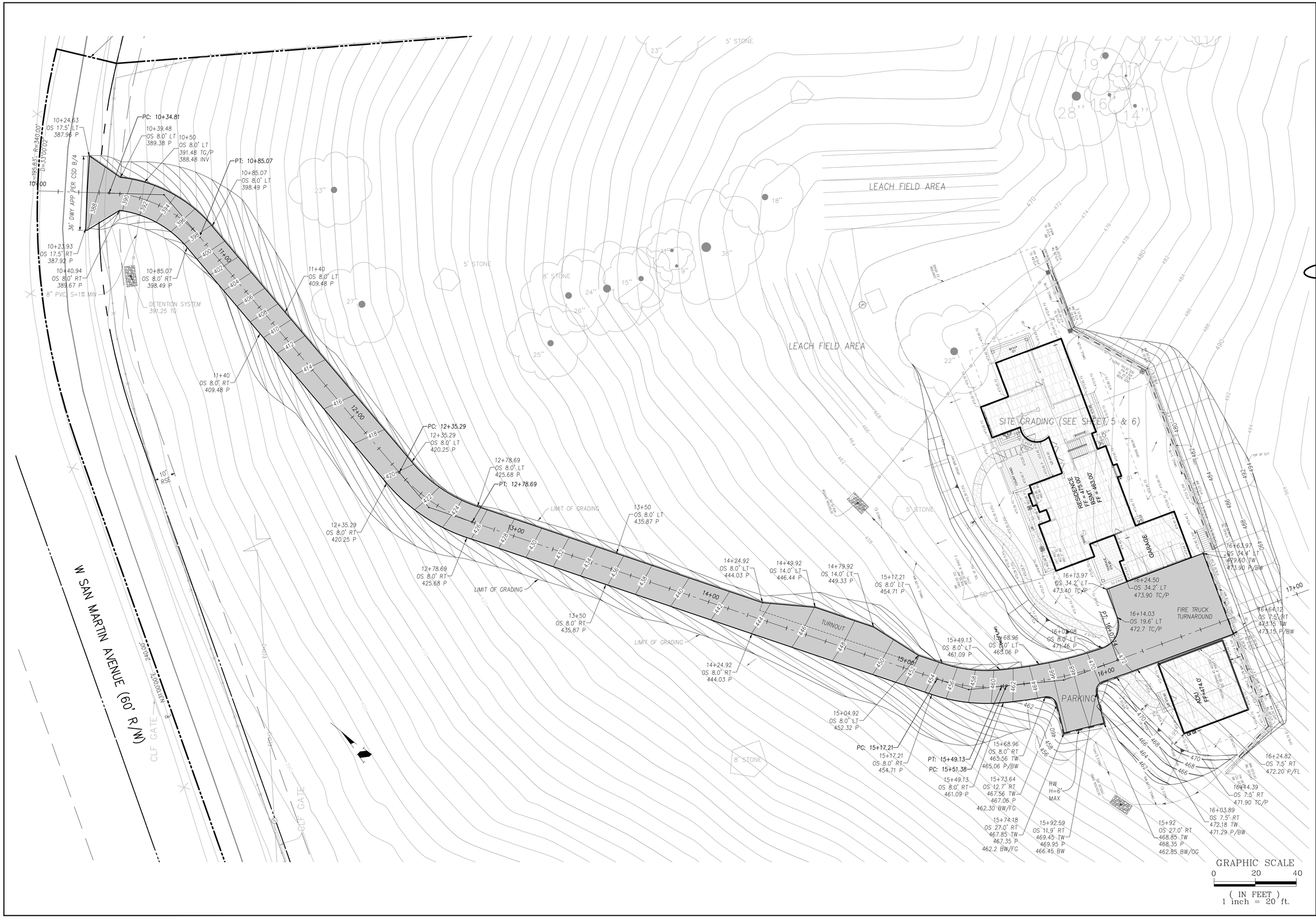
W SAN MARTIN AVENUE (60' R/W)
CLF GATE
CLF GATE
LEACH FIELD AREA
LEACH FIELD AREA
SITE GRADING (SEE SHEET 5 & 6)
RESIDENCE
FF=1,470.00
BSMT=1,463.00
FF=1,463.00
GARAGE
FIRE TRUCK TURNAROUND
TURNOUT
PARKING
ADU
FF=1,470.0
DETENTION SYSTEM
391.25 TG
8" PVC, S=1% MIN
36' DWY APP PER CSD B/4
LIMIT OF GRADING
PC: 10+34.81
PT: 10+85.07
PC: 12+35.29
PT: 12+78.69
PC: 15+17.21
PT: 15+49.13
PC: 15+51.38
PT: 16+01.08
GRAPHIC SCALE
0 20 40
(IN FEET)
1 inch = 20 ft.

REVISIONS			

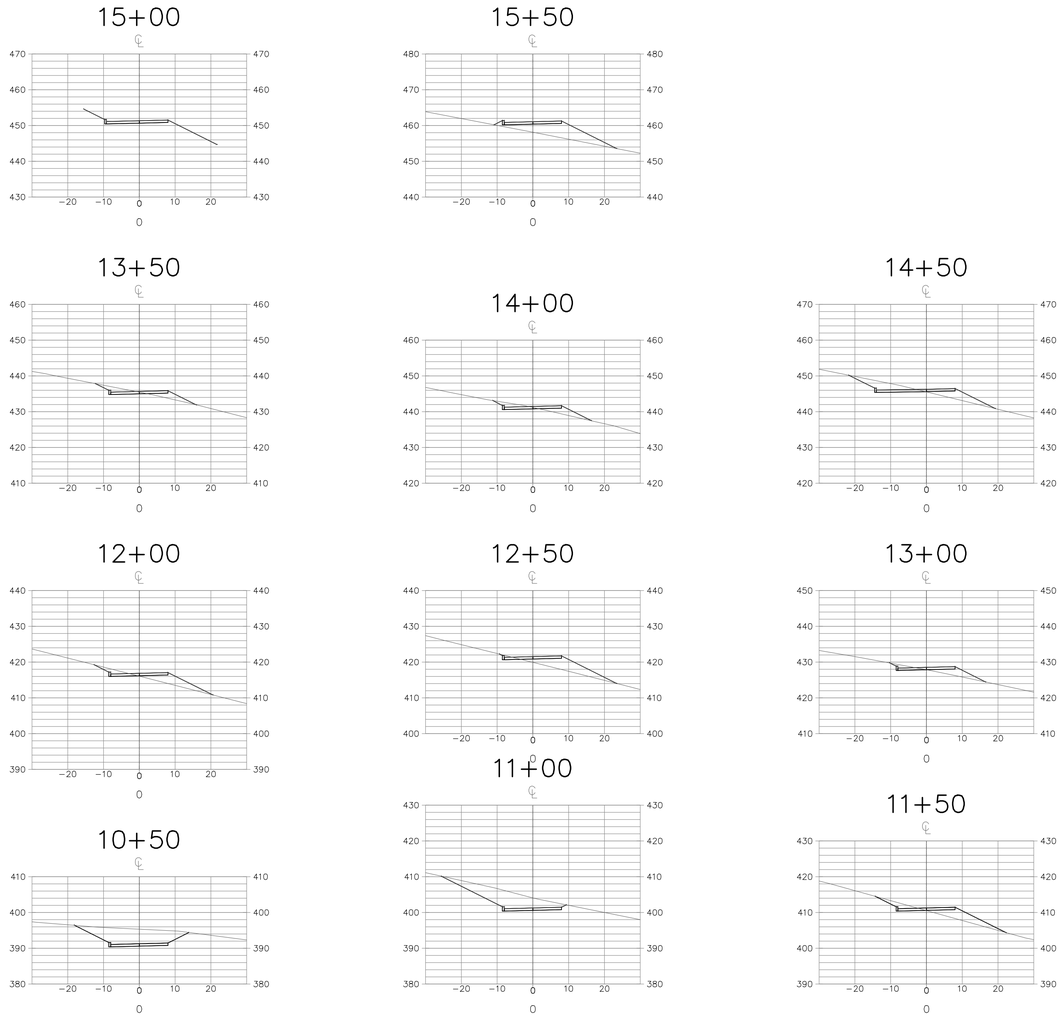

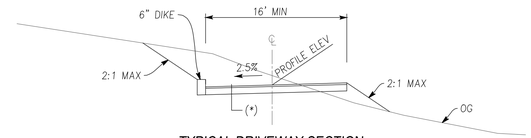

TYPICAL DRIVEWAY SECTION

NTS

(*) THICKNESS OF DRIVEWAY PAVEMENT SHALL BE DETERMINED BY THE GEOTECHNICAL ENGINEER.

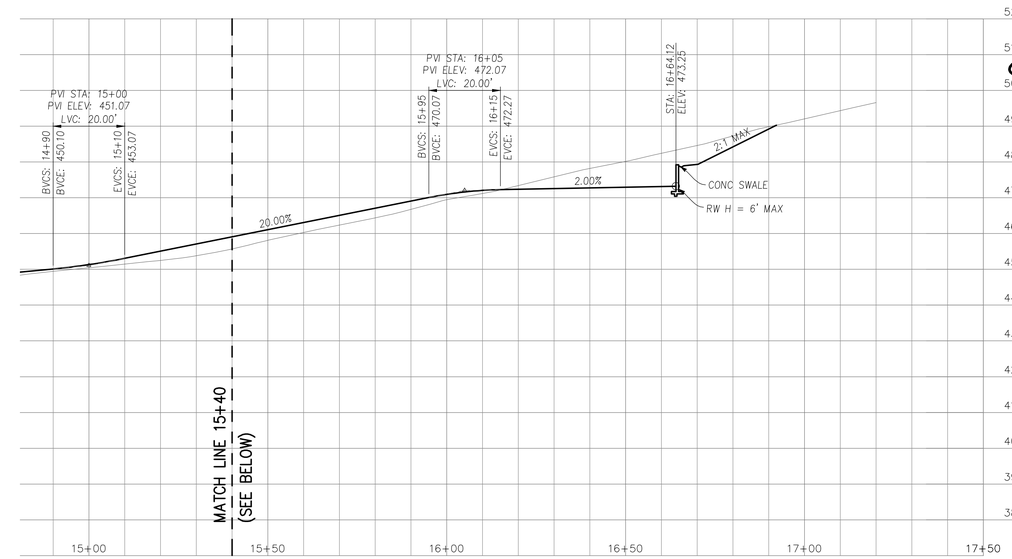

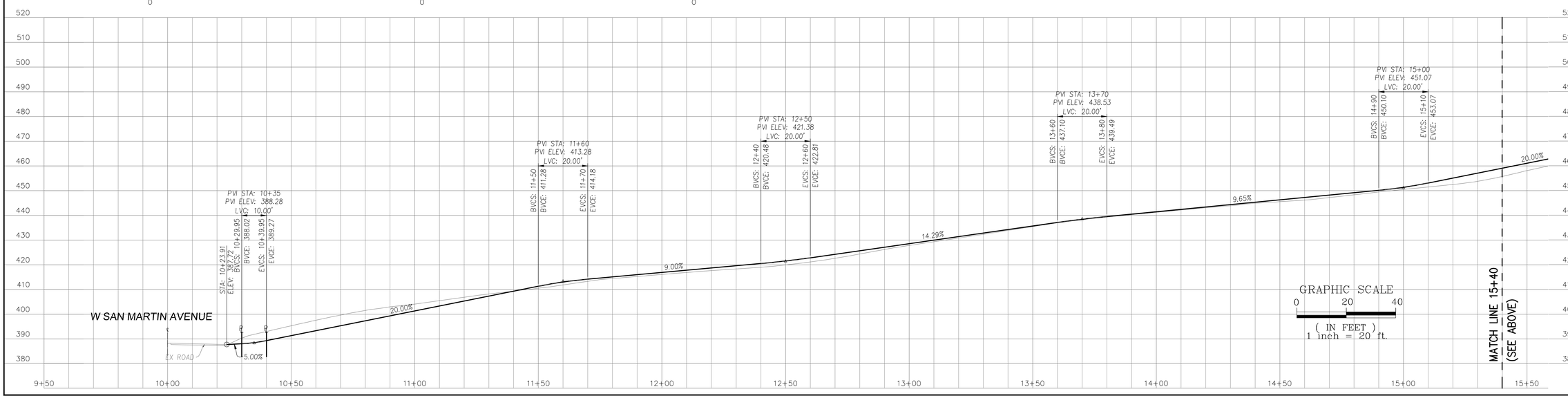

△	△	△	△	△	BY	DATE

REVISIONS

REGISTERED PROFESSIONAL ENGINEER
N. M. LE
No. 47518
CIVIL
STATE OF CALIFORNIA

PRITH BANERJEE
1068 UNIVERSITY AVE, PALO ALTO, CA 94301
Tel: (847) 757 - 8708
EMAIL: PRITHBANERJEE@GMAIL.COM

LE ENGINEERING
598 E Santa Clara Ste270
San Jose, CA 95112
Phone: (408) 806-7187

DRIEWAY PROFILE & SECTIONS
W SAN MARTIN AVENUE
APN 779-47-004

SAN MARTIN | CALIFORNIA

Project No: | Designed: HP | Checked: HV | Date: 07/11/24

SHEET
4

FILE #

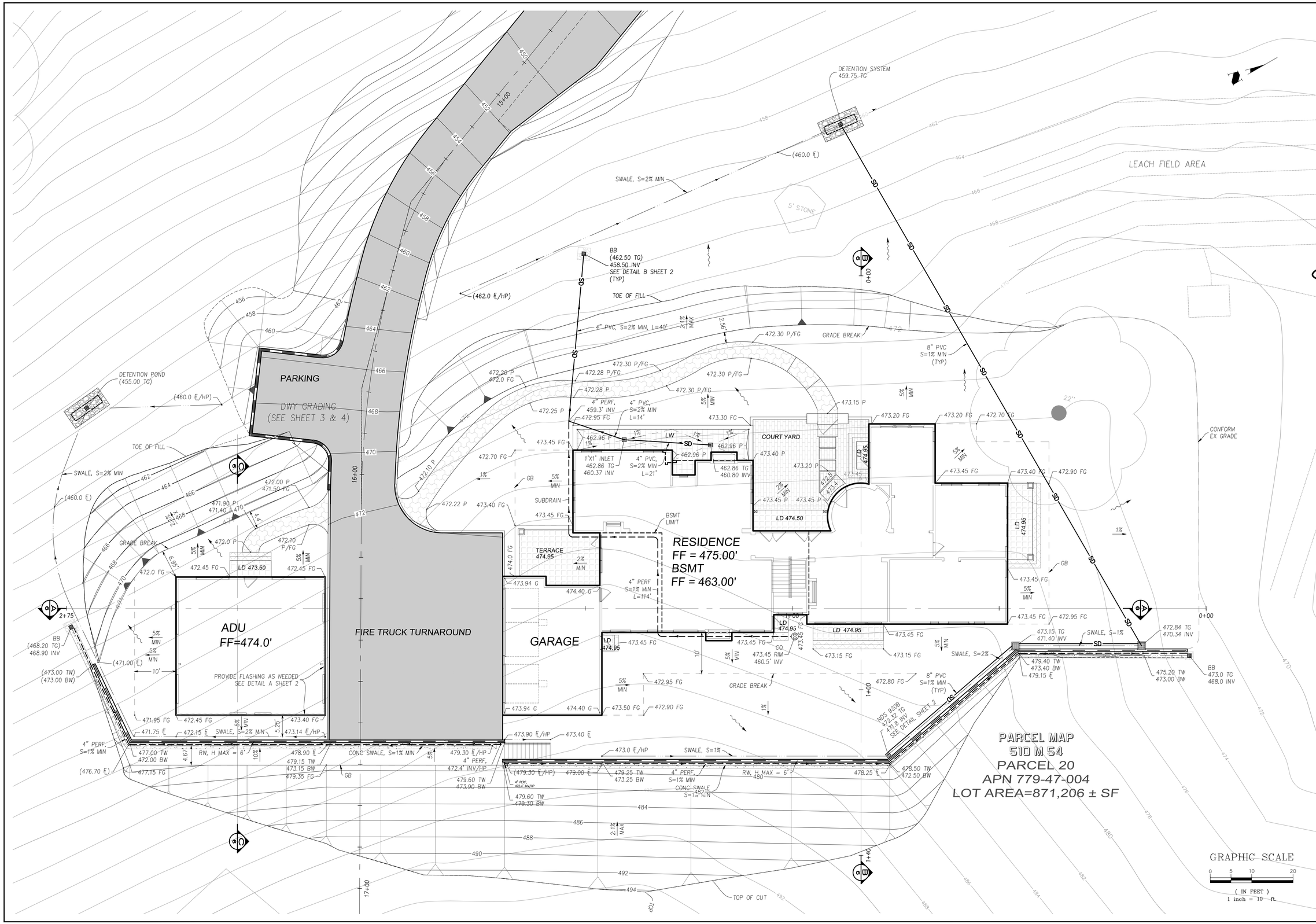

REVISIONS		BY	DATE

REGISTERED PROFESSIONAL ENGINEER
N. M. LEE
No. 47518
CIVIL
STATE OF CALIFORNIA

PRITH BANERJEE
1068 UNIVERSITY AVE, PALO ALTO, CA 94301
Tel: (847) 757 - 8708
EMAIL: PRITHBANERJEE@GMAIL.COM

LE ENGINEERING
598 E Santa Clara Ste270
San Jose, CA 95112
Phone: (408) 806-7187

HOUSE SITE GRADING PLAN
W SAN MARTIN AVENUE
APN 779-47-004

SAN MARTIN CALIFORNIA

Project No.: | Designed: HP | Checked: HV | Date: 07/11/24

SHEET
5

FILE #

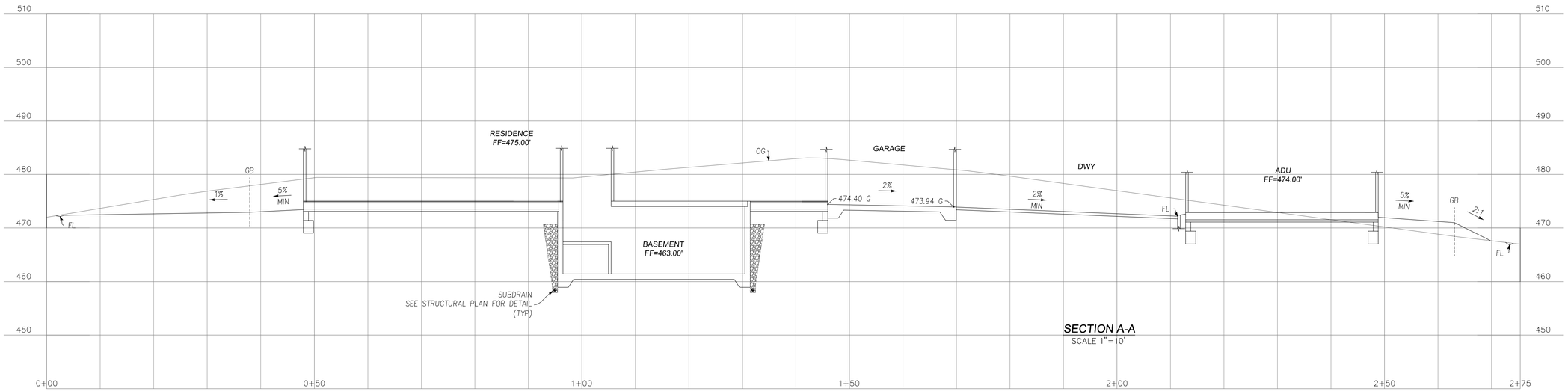

SECTION A-A

SCALE 1"=10'

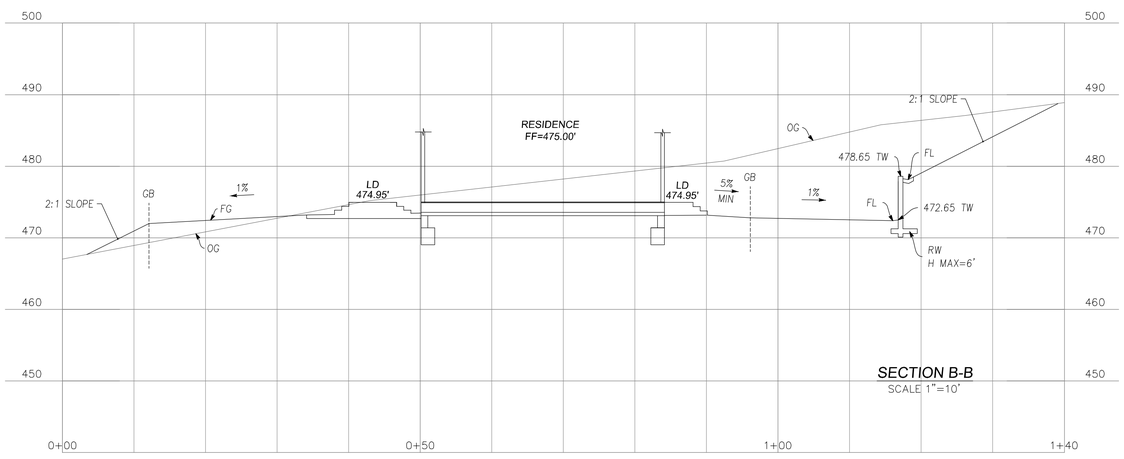

SECTION B-B

SCALE 1"=10'

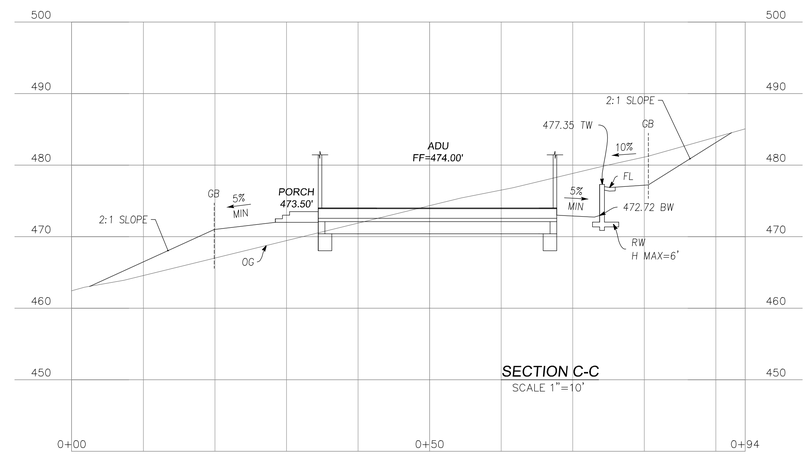

SECTION C-C

SCALE 1"=10'

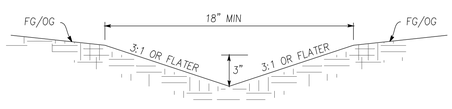

SWALE TYPICAL SECTION

NTS

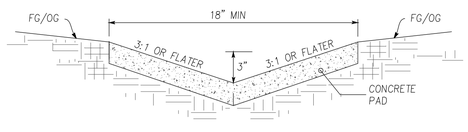

CONCRETE SWALE SECTION

NTS

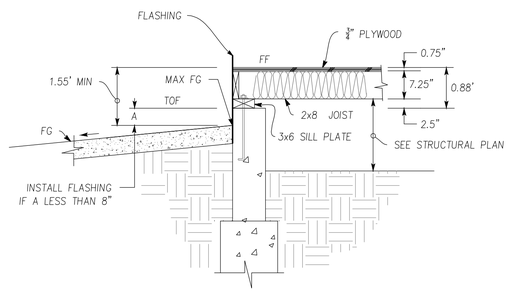

DETAIL A - FINISH GRADE DETAIL

AT BUILDING FOUNDATION

NTS

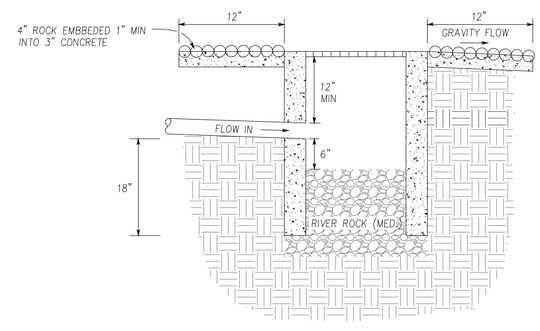

DETAIL B - BUBBLER BOX

1. RIGID PLASTIC, A.C., C.I., OR STEEL PIPE ALLOWED TO BOX FROM INLET
2. BOX SHALL BE SET WITH ADJACENT GRADES SLOPING AWAY TO PREVENT RAINWATER & LANDSCAPE WATER FROM ENTERING.
3. BOX SHALL BE SET IN LANDSCAPED AREA TO FACILITATE PERCOLATION.
4. BOX SHALL NOT HAVE CONCRETE BOTTOM TO FACILITATE PERCOLATION.

GRAPHIC SCALE

0 5 10 20

(IN FEET)
1 inch = 10 ft.

REVISIONS	BY	DATE

REGISTERED PROFESSIONAL ENGINEER
PRITH M. BANERJEE
No. 47518
CIVIL
STATE OF CALIFORNIA

PRITH BANERJEE
1068 UNIVERSITY AVE, PALO ALTO, CA 94301
Tel: (847) 757 - 8708
EMAIL: PRITHBANERJEE@GMAIL.COM

LE ENGINEERING
598 E Santa Clara, Ste270
San Jose, CA 95112
Phone: (408) 906-7187

BUILDING CROSS SECTIONS
W SAN MARTIN AVENUE
APN 779-47-004

SAN MARTIN | CALIFORNIA

Project No. | Designed: HP | Checked: HV | Date: 07/11/24

SHEET
6

FILE #

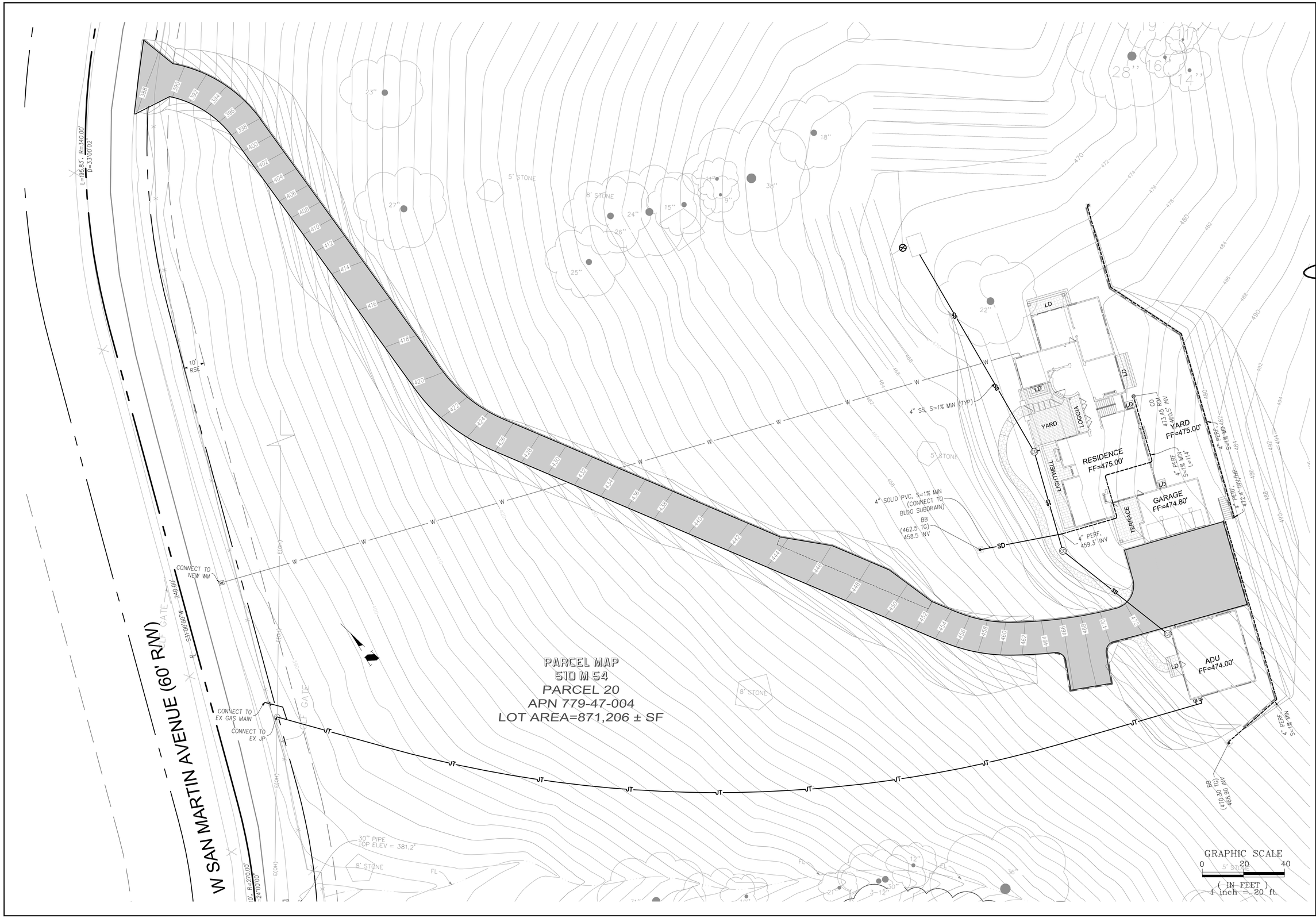

						REVISIONS
					BY	DATE

REGISTERED PROFESSIONAL ENGINEER
N. M. LEE
No. 47518
CIVIL
STATE OF CALIFORNIA

PRITH BANERJEE
1068 UNIVERSITY AVE, PALO ALTO, CA 94301
Tel: (847) 757 - 8708
EMAIL: PRITHBANERJEE@GMAIL.COM

LE ENGINEERING
598 E Santa Clara Ste270
San Jose, CA 95112
Phone: (408) 806-7187

UTILITY PLAN
W SAN MARTIN AVENUE
APN 779-47-004

SAN MARTIN CALIFORNIA

Project No.: | Designed: HP | Checked: HV | Date: 07/11/24

SHEET
7

FILE #

5 ENTRANCE/OUTLET TIRE WASH

CASQA DETAIL TC-3

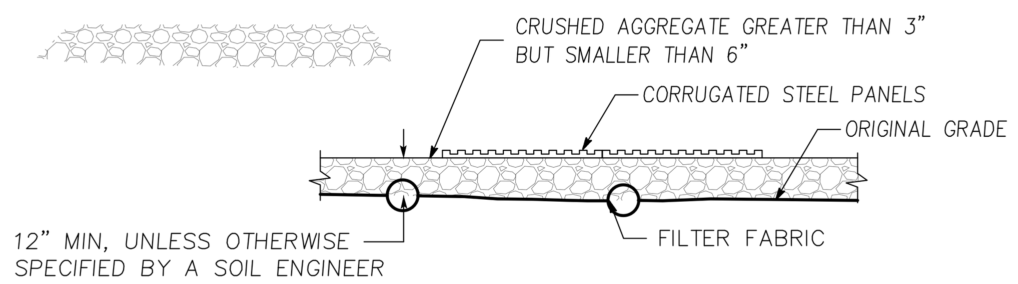

SECTION B–B

NTS

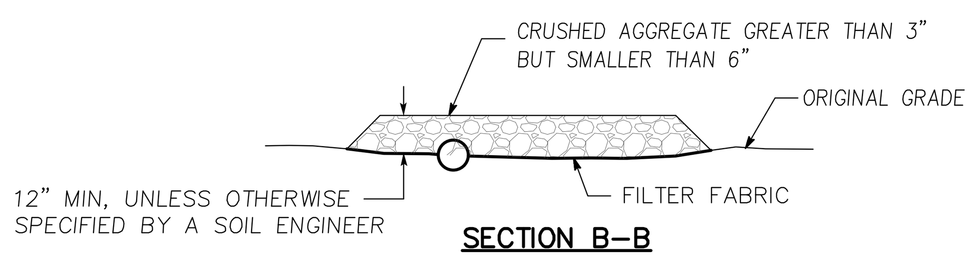

SECTION B–B

NTS

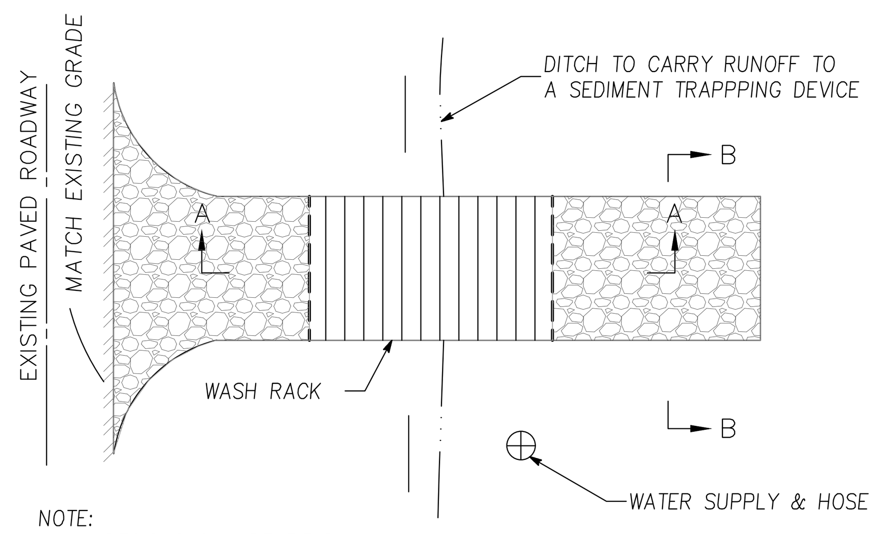

NOTE:
MANY DESIGNS CAN BE FIELD FABRICATED, OR FABRICATED UNITS MAY BE USED.

3 STABILIZED CONSTRUCTION ENTRANCE/EXIT

CASQA DETAIL TC-1

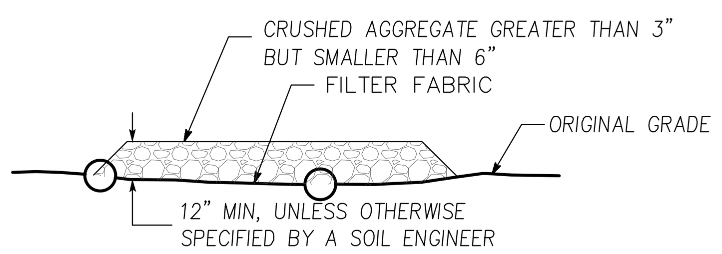

SECTION B–B

NTS

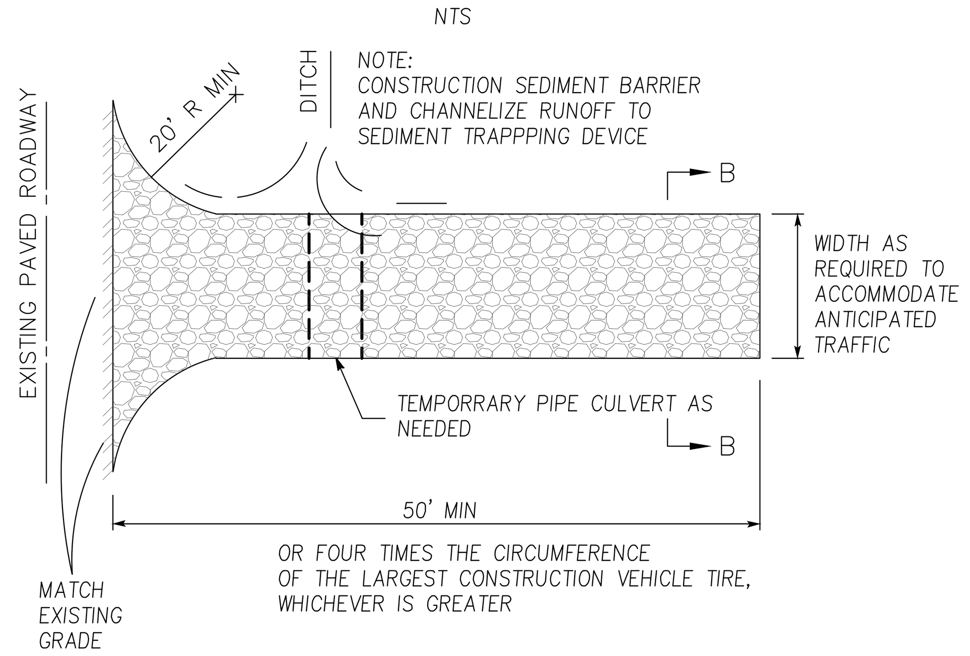

NOTE:
CONSTRUCTION SEDIMENT BARRIER AND CHANNELIZE RUNOFF TO SEDIMENT TRAPPPING DEVICE

4 VELOCITY DISSIPATION DEVICES

CASQA DETAIL EC-10

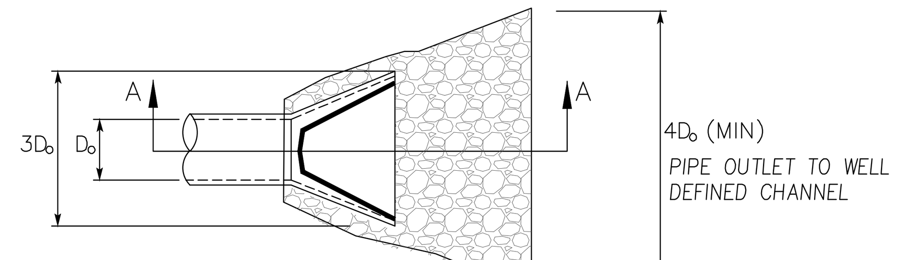

PLAN VIEW

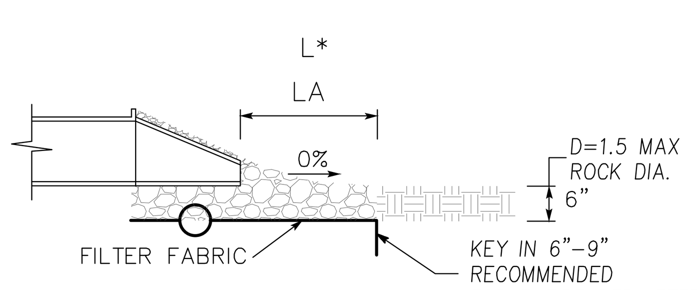

SECTION A–A

* LENGTH PER ABAG DESIGN STANDARDS

1 SILT FENCE

CASQA DETAIL SE-1

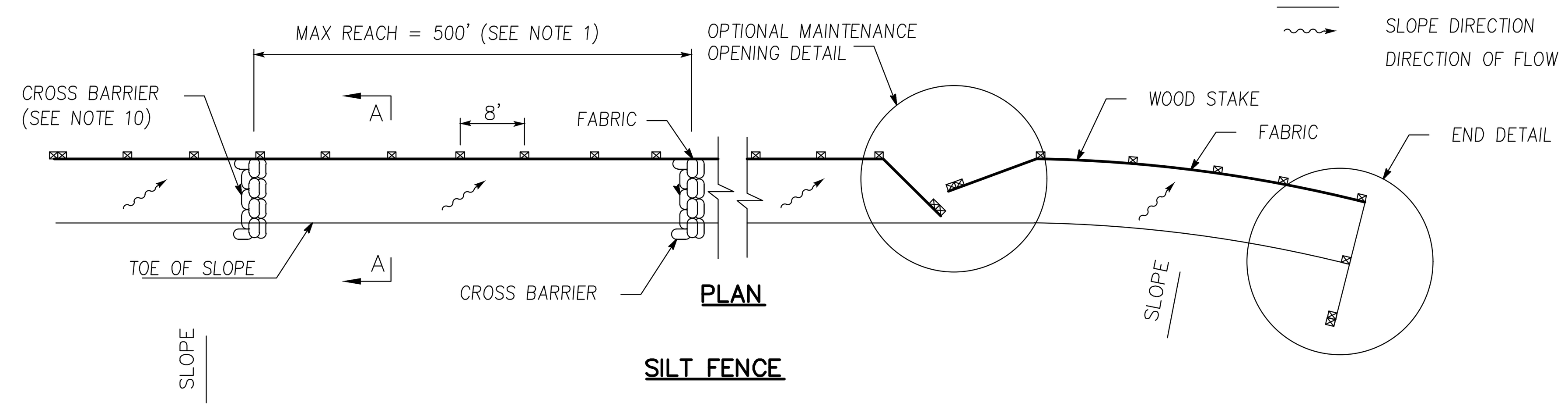

SILT FENCE

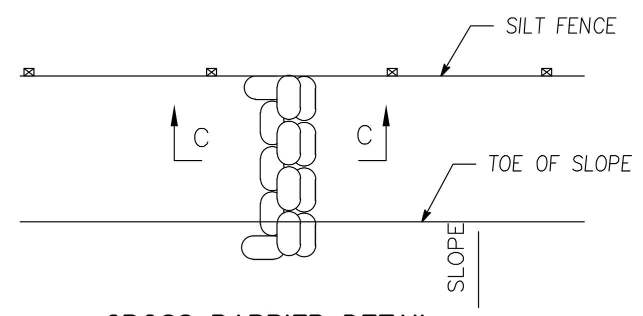

CROSS BARRIER DETAIL

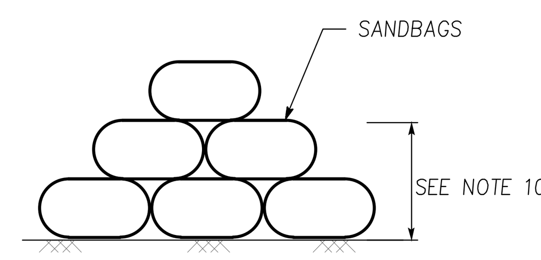

SECTION C–C

NOTES:

1. CONSTRUCTION THE LENGTH OF EACH REACH SO THAT THE CHANGE IS BASE ELEVATION ALONG THE REACH DOES NOT EXCEED 1/3 THE HEIGHT OF THE LINEAR BARRIER, IN NO CASE SHALL THE REACH LENGTH EXCEED 500'
2. THE LAST 8'–0" AT FENCE SHALL BE TURNED UP SLOPE.
3. STAKE DIMENSIONS ARE NOMINAL.
4. DIMENSION MAY VERY TO FIT FIELD CONDITION.
5. STAKES SHALL BE SPACE AT 8'–0" MAXIMUM AND SHALL BE POSITIONED ON DOWNSTREAM SIDE OF FENCE.
6. STAKE SHALL BE OVERLAP DRIVEN TIGHTLY TOGETHER TO PREVENT POTENTIAL FLOW–THROUGH OF SEDIMENT AT JOINT. THE TOP OF STAKE SHALL BE SECURE WITH WIRE.
7. FOR END STAKE, FENCE FABRIC SHALL BE FOLDED AROUND TWO STAKES ONE FULL TURN AND SECURED WITH 4 STABLE.
8. MINIMUM 4 STAPLES PER STAKE. DIMENSIONS SHOWN ARE TYPICAL.
9. CROSS BARRIERS SHALL BE A MINIMUM OF 1/3 A MAXIMUM AT 1/2 THE HEIGHT OF THE LINEAR BARRIER.
10. MAINTENANCE OPENINGS SHALL BE CONSTRUCTED IN A MANNER TO ENSURE SEDIMENT REMAINS BEHIND SILT FENCE.
11. JOINING SECTIONS SHALL NOT BE PLACED AT SUMP LOCATIONS.
12. SANDBAG ROWS AND LAYERS SHALL BE OFFSET TO ELIMINATE GAPS.

2 SILT FENCE

CASQA DETAIL SE-1

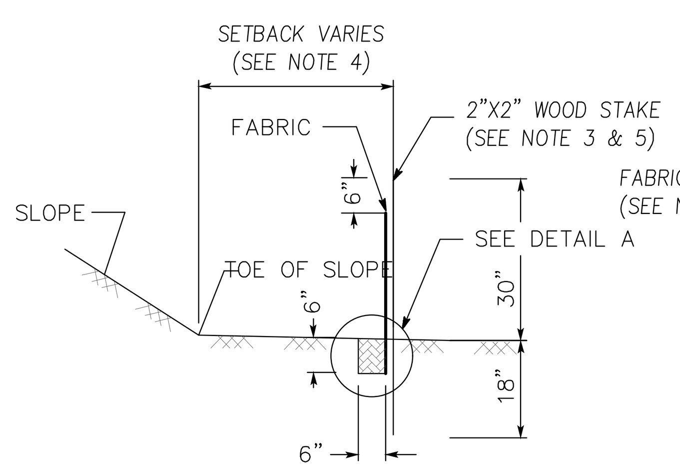

SECTION A–A

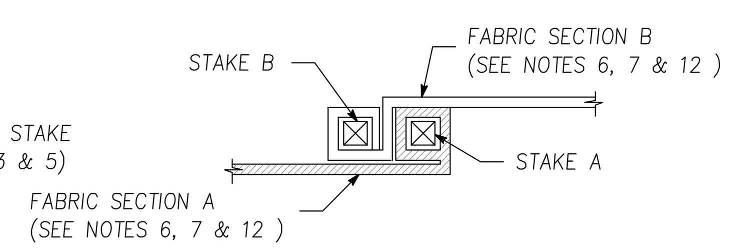

JOINING SECTION DETAIL (TOP VIEW)

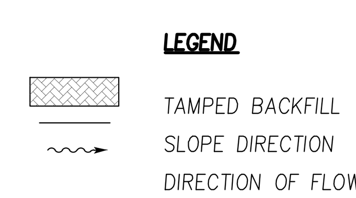

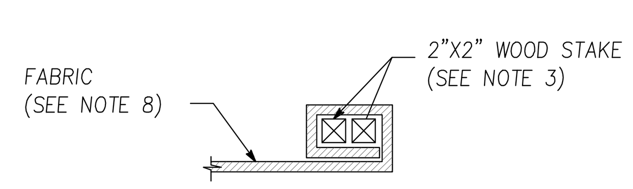

END STAKE DETAIL (TOP VIEW)

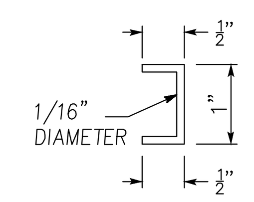

STAPLE DETAIL (SEE NOTE 9)

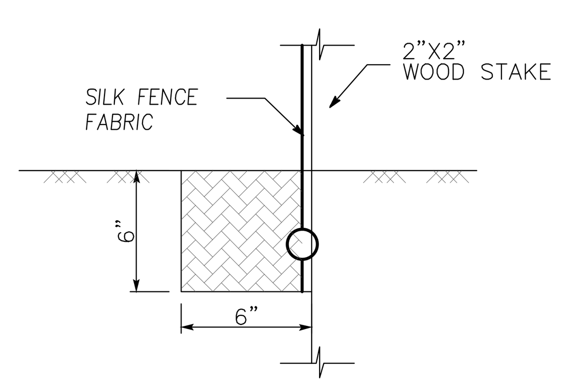

DETAIL A

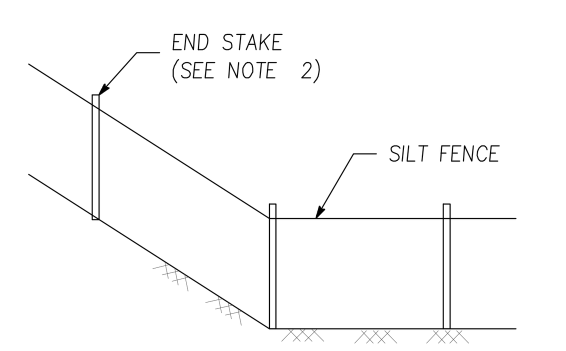

END DETAIL

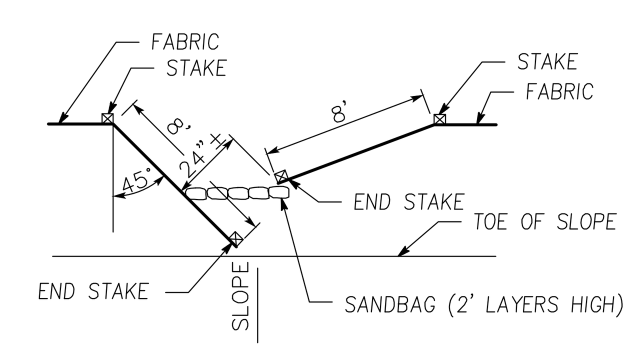

OPTIONAL MAINTENANCE OPENING DETAIL (SEE NOTE 11)

STANDARD BEST MANAGEMENT PRACTICE NOTES

1. SOLID AND DEMOLITION WASTE MANAGEMENT: PROVIDE DESIGNATED WASTE COLLECTION AREAS AND CONTAINERS ON SITE AWAY FROM STREETS, GUTTERS, STORM DRAINS, AND WATERWAYS, AND ARRANGE FOR REGULAR DISPOSAL. WASTE CONTAINERS MUST BE WATERTIGHT AND COVERED AT ALL TIMES EXCEPT WHEN WASTE IS DEPOSITED. REFER TO EROSION & SEDIMENT CONTROL FIELD MANUAL, 4TH EDITION (PAGE C3) OR LATEST. HAZARDOUS WASTE MANAGEMENT: PROVIDE PROPER HANDLING AND
2. DISPOSAL OF HAZARDOUS WASTES BY A LICENSED HAZARDOUS WASTE MATERIAL HAULER. HAZARDOUS WASTES SHALL BE STORED AND PROPERLY LABELED IN SEALED CONTAINERS CONSTRUCTED OF SUITABLE MATERIALS. REFER TO EROSION & SEDIMENT CONTROL FIELD MANUAL, 4TH EDITION (PAGES C–5 TO C–6) OR LATEST.
3. SPILL PREVENTION AND CONTROL: PROVIDE PROPER STORAGE AREAS FOR LIQUID AND SOLID MATERIALS, INCLUDING CHEMICALS AND HAZARDOUS SUBSTANCES, AWAY FROM STREETS, GUTTERS, STORM DRAINS, AND WATERWAYS. SPILL CONTROL MATERIALS MUST BE KEPT ON SITE WHERE READILY ACCESSIBLE. SPILLS MUST BE CLEANED UP IMMEDIATELY AND CONTAMINATED SOIL DISPOSED PROPERLY. REFER TO EROSION & SEDIMENT CONTROL FIELD MANUAL, 4TH EDITION (PAGES C–7 TO C–8, C–13 TO C–14) OR LATEST. VEHICLE AND CONSTRUCTION EQUIPMENT SERVICE AND STORAGE:
4. AN AREA SHALL BE DESIGNATED FOR THE MAINTENANCE, WHERE ON–SITE MAINTENANCE IS REQUIRED, AND STORAGE OF EQUIPMENT THAT IS PROTECTED FROM STORMWATER RUN–ON AND RUNOFF. MEASURES SHALL BE PROVIDED TO CAPTURE ANY WASTE OILS, LUBRICANTS, OR OTHER POTENTIAL POLLUTANTS AND THESE WASTES SHALL BE PROPERLY DISPOSED OF OFF SITE. FUELING AND MAJOR MAINTENANCE/REPAIR, AND WASHING SHALL BE CONDUCTED OFF–SITE WHENEVER FEASIBLE. REFER TO EROSION & SEDIMENT CONTROL FIELD MANUAL, 4TH EDITION (PAGE C9) OR LATEST.
5. MATERIAL DELIVERY, HANDLING AND STORAGE: IN GENERAL, MATERIALS SHOULD NOT BE STOCKPILED ON SITE. WHERE TEMPORARY STOCKPILES ARE NECESSARY AND APPROVED BY THE COUNTY, THEY SHALL BE COVERED WITH SECURED PLASTIC SHEETING OR TARP AND LOCATED IN DESIGNATED AREAS NEAR CONSTRUCTION ENTRANCES AND AWAY FROM DRAINAGE PATHS AND WATERWAYS. BARRIERS SHALL BE PROVIDED AROUND STORAGE AREAS WHERE MATERIALS ARE POTENTIALLY IN CONTACT WITH RUNOFF. REFER TO EROSION & SEDIMENT CONTROL FIELD MANUAL, 4TH EDITION (PAGES C–11 TO C–12) OR LATEST.
6. HANDLING AND DISPOSAL OF CONCRETE AND CEMENT: WHEN CONCRETE TRUCKS AND EQUIPMENT ARE WASHED ON–SITE, CONCRETE WASTEWATER SHALL BE CONTAINED IN DESIGNATED CONTAINERS OR IN A TEMPORARY LINED AND WATERTIGHT PIT WHERE WASTED CONCRETE CAN HARDEN FOR LATER REMOVAL. IF POSSIBLE HAVE CONCRETE CONTRACTOR REMOVE CONCRETE WASH WATER FROM SITE. IN NO CASE SHALL FRESH CONCRETE BE WASHED INTO THE ROAD RIGHT–OF–WAY. REFER TO EROSION & SEDIMENT CONTROL FIELD MANUAL, 4TH EDITION (PAGES C–15 TO C–16) OR LATEST.
7. PAVEMENT CONSTRUCTION MANAGEMENT: PREVENT OR REDUCE THE DISCHARGE OF POLLUTANTS FROM PAVING OPERATIONS, USING MEASURES TO PREVENT RUN–ON AND RUNOFF POLLUTION AND PROPERLY DISPOSING OF WASTES. AVOID PAVING IN THE WET SEASON AND RESCHEDULE PAVING WHEN RAIN IS IN THE FORECAST. RESIDUE FROM SAW–CUTTING SHALL BE VACUUMED FOR PROPER DISPOSAL. REFER TO EROSION & SEDIMENT CONTROL FIELD MANUAL, 4TH EDITION (PAGES C–17 TO C–18) OR LATEST.
8. CONTAMINATED SOIL AND WATER MANAGEMENT: INSPECTIONS TO IDENTIFY CONTAMINATED SOILS SHOULD OCCUR PRIOR TO CONSTRUCTION AND AT REGULAR INTERVALS DURING CONSTRUCTION. REMEDIATING CONTAMINATED SOIL SHOULD OCCUR PROMPTLY AFTER IDENTIFICATION AND BE SPECIFIC TO THE CONTAMINANT IDENTIFIED, WHICH MAY INCLUDE HAZARDOUS WASTE REMOVAL. REFER TO EROSION & SEDIMENT CONTROL FIELD MANUAL, 4TH EDITION (PAGES C–19 TO C–20) OR LATEST.
9. SANITARY/SEPTIC WATER MANAGEMENT: TEMPORARY SANITARY FACILITIES SHOULD BE LOCATED AWAY FROM DRAINAGE PATHS, WATERWAYS, AND TRAFFIC AREAS. ONLY LICENSED SANITARY AND SEPTIC WASTE HAULERS SHOULD BE USED. SECONDARY CONTAINMENT SHOULD BE PROVIDED FOR ALL SANITARY FACILITIES. REFER TO EROSION & SEDIMENT CONTROL FIELD MANUAL, 4TH EDITION (PAGE C–21) OR LATEST.
10. INSPECTION & MAINTENANCE: AREAS OF MATERIAL AND EQUIPMENT STORAGE SITES AND TEMPORARY SANITARY FACILITIES MUST BE INSPECTED WEEKLY. PROBLEM AREAS SHALL BE IDENTIFIED AND APPROPRIATE ADDITIONAL AND/OR ALTERNATIVE CONTROL MEASURES IMPLEMENTED IMMEDIATELY, WITHIN 24 HOURS OF THE PROBLEM BEING IDENTIFIED.

STANDARD EROSION CONTROL NOTES

1. SEDIMENT CONTROL MANAGEMENT: TRACKING PREVENTION & CLEAN UP: ACTIVITIES SHALL BE ORGANIZED AND MEASURES TAKEN AS NEEDED TO PREVENT OR MINIMIZE TRACKING OF SOIL ONTO THE PUBLIC STREET SYSTEM. A GRAVEL OR PROPRIETARY DEVICE CONSTRUCTION ENTRANCE/EXIT IS REQUIRED FOR ALL SITES. CLEAN UP OF TRACKED MATERIAL SHALL BE PROVIDED BY MEANS OF A STREET SWEEPER PRIOR TO AN APPROACHING RAIN EVENT, OR AT LEAST ONCE AT THE END OF EACH WORKDAY THAT MATERIAL IS TRACKED, OR, MORE FREQUENTLY AS DETERMINED BY THE COUNTY INSPECTOR. REFER TO EROSION & SEDIMENT CONTROL FIELD MANUAL, 4TH EDITION (PAGES B–31 TO B–33) OR LATEST.

   STORM DRAIN INLET AND CATCH BASIN INLET PROTECTION: ALL INLETS WITHIN THE VICINITY OF THE PROJECT AND WITHIN THE PROJECT LIMITS SHALL BE PROTECTED WITH GRAVEL BAGS PLACED AROUND INLETS OR OTHER INLET PROTECTION. AT LOCATIONS WHERE EXPOSED SOILS ARE PRESENT, STAKED FIBER ROLES OR STAKED SILT FENCES CAN BE USED. INLET FILTERS ARE NOT ALLOWED DUE TO CLOGGING AND SUBSEQUENT FLOODING. REFER TO EROSION & SEDIMENT CONTROL FIELD MANUAL, 4TH EDITION (PAGES B–49 TO B–51) OR LATEST. STORM WATER RUNOFF: NO STORM WATER RUNOFF SHALL BE ALLOWED TO DRAIN IN TO THE EXISTING AND/OR PROPOSED UNDERGROUND STORM DRAIN SYSTEM OR OTHER ABOVE GROUND WATERCOURSES UNTIL APPROPRIATE EROSION CONTROL MEASURES ARE FULLY INSTALLED. DUST CONTROL: THE CONTRACTOR SHALL PROVIDE DUST CONTROL IN GRADED AREAS AS REQUIRED BY PROVIDING WET SUPPRESSION OR CHEMICAL STABILIZATION OF EXPOSED SOILS, PROVIDING FOR RAPID CLEAN UP OF SEDIMENTS DEPOSITED ON PAVED ROADS, FURNISHING CONSTRUCTION ROAD ENTRANCES AND VEHICLE WASH DOWN AREAS, AND LIMITING THE AMOUNT OF AREAS DISTURBED BY CLEARING AND EARTH MOVING OPERATIONS BY SCHEDULING THESE ACTIVITIES IN PHASES. STOCKPILING: EXCAVATED SOILS SHALL NOT BE PLACED IN STREETS OR ON PAVED AREAS. BORROW AND TEMPORARY STOCKPILES SHALL BE PROTECTED WITH APPROPRIATE EROSION CONTROL MEASURES(TARPS, STRAW BALES, SILT FENCES, ECT.) TO ENSURE SILT DOES NOT LEAVE THE SITE OR ENTER THE STORM DRAIN SYSTEM OR NEIGHBORING WATERCOURSE.
2. EROSION CONTROL: DURING THE RAINY SEASON, ALL DISTURBED AREAS MUST INCLUDE AN EFFECTIVE COMBINATION OF EROSION AND SEDIMENT CONTROL. IT IS REQUIRED THAT TEMPORARY EROSION CONTROL MEASURES ARE APPLIED TO ALL DISTURBED SOIL AREAS PRIOR TO A RAIN EVENT. DURING THE NON–RAINY SEASON, EROSION CONTROL MEASURES MUST BE APPLIED SUFFICIENT TO CONTROL WIND EROSION AT THE SITE.
3. INSPECTION & MAINTENANCE: DISTURBED AREAS OF THE PROJECT'S SITE, LOCATIONS WHERE VEHICLES ENTER OR EXIT THE SITE, AND ALL EROSION AND SEDIMENT CONTROLS THAT ARE IDENTIFIED AS PART OF THE EROSION CONTROL PLANS MUST BE INSPECTED BY THE CONTRACTOR BEFORE, DURING, AND AFTER STORM EVENTS, AND AT LEAST WEEKLY DURING SEASONAL WET PERIODS. PROBLEM AREAS SHALL BE IDENTIFIED AND APPROPRIATE ADDITIONAL AND/ OR ALTERNATIVE CONTROL MEASURES IMPLEMENTED IMMEDIATELY, WITHIN 24 HOURS OF THE PROBLEM BEING IDENTIFIED.
4. PROJECT COMPLETION: PRIOR TO PROJECT COMPLETION AND SIGNOFF BY THE COUNTY INSPECTOR, ALL DISTURBED AREAS SHALL BE RESEEDED, PLANTED, OR LANDSCAPED TO MINIMIZE THE POTENTIAL FOR EROSION ON THE SUBJECT SITE.
5. IT SHALL BE THE OWNER'S/CONTRACTOR'S RESPONSIBILITY TO MAINTAIN CONTROL OF THE ENTIRE CONSTRUCTION OPERATION AND TO KEEP THE ENTIRE SITE IN COMPLIANCE WITH THE EROSION CONTROL PLAN.
6. EROSION AND SEDIMENT CONTROL BEST MANAGEMENT PRACTICES SHALL BE OPERABLE YEAR ROUND OR UNTIL VEGETATION IS FULLY ESTABLISHED ON LANDSCAPED SURFACES.
7. GRADING WORK BETWEEN OCTOBER 15 AND APRIL 15 IS AT THE DISCRETION OF SANTA CLARA COUNTY BUILDING OFFICIAL.
8. EXPOSED SLOPE SHALL BE PROTECTED WITH JUTE NET AND/OR HYDROSEED. HYDROSEED SHALL BE A HOMOGENEOUSLY MIX OF SLURRY CONTAINING NOT LESS THAN 44 LBS ORGANIC MULCHING AMENDMENT PLUS FERTILIZER, CHEMICAL ADDITIVES AND SOILS FOR EACH 100 GALLONS OF WATER.

Best Management Practices and Erosion Control Details Sheet 1
County of Santa Clara

SOURCE FOR GRAPHICS: CALIFORNIA STORMWATER BMP HANDBOOK, CALIFORNIA STORMWATER QUALITY ASSOCIATION, JANUARY 2003. AVAILABLE FROM WWW.CABMPHANDBOOKS.COM.

REVISIONS | BY | DATE

REGISTERED PROFESSIONAL ENGINEER N. M. LE No. 47518 CIVIL STATE OF CALIFORNIA

PRITH BANERJEE
1068 UNIVERSITY AVE, PALO ALTO, CA 94301
Tel: (847) 757 - 8708
EMAIL: PRITHBANERJEE@GMAIL.COM

LE ENGINEERING
598 E Santa Clara Ste270
San Jose, CA 95112
Phone: (408) 806-7187

EROSION CONTROL DETAILS
W SAN MARTIN AVENUE
APN 779-47-004
SAN MARTIN CALIFORNIA

Project No.: | Designed: HP | Checked: HV | Date: 07/11/24

SHEET 9

FILE

7 Geotextiles and Mats

CASQA Detail EC-7

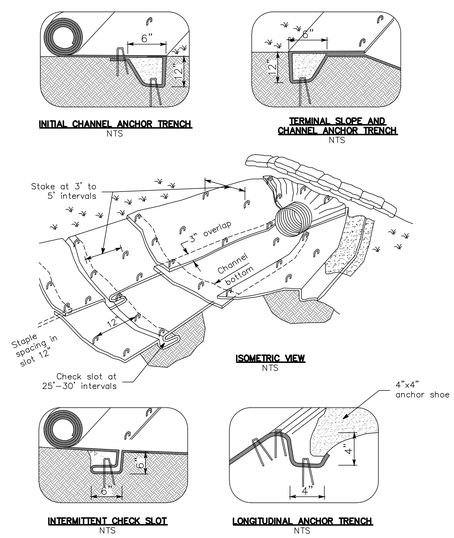

NOTES:
1. Check slots to be constructed per manufacturers specifications.
2. Staking or stapling layout per manufacturers specifications.
3. Install per manufacturer's recommendations.

TYPICAL INSTALLATION DETAIL

5 Geotextiles and Mats

CASQA Detail EC-7

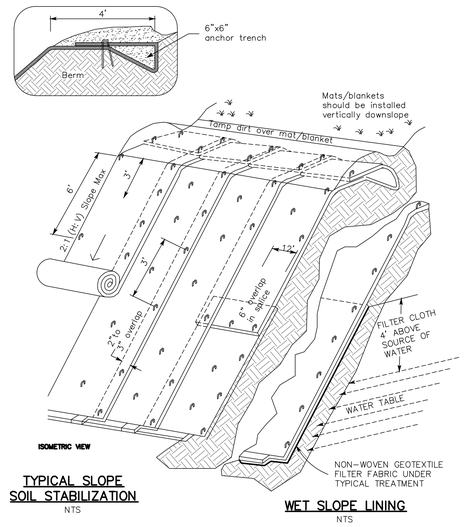

TYPICAL SLOPE SOIL STABILIZATION
NTS

WET SLOPE LINING
NTS

NOTES:
1. Slope surface shall be free of rocks, clods, sticks and grass. Mats/blankets shall have good soil contact.
2. Lay blankets loosely and stake or staple to maintain direct contact with the soil. Do not stretch.
3. Install per manufacturer's recommendations.

TYPICAL INSTALLATION DETAIL

3 Entrance/Outlet Tire Wash

CASQA Detail TC-3

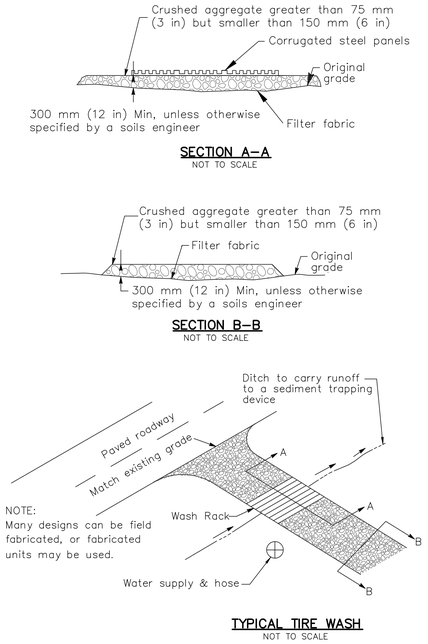

1 Fiber Rolls

CASQA Detail SE-5

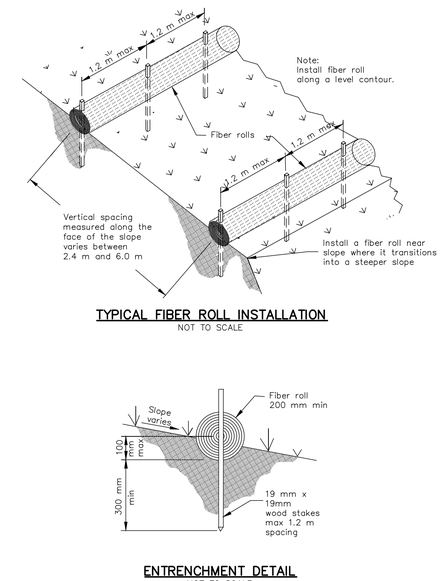

8 Storm Drain Inlet Protection

CASQA Detail SE-10

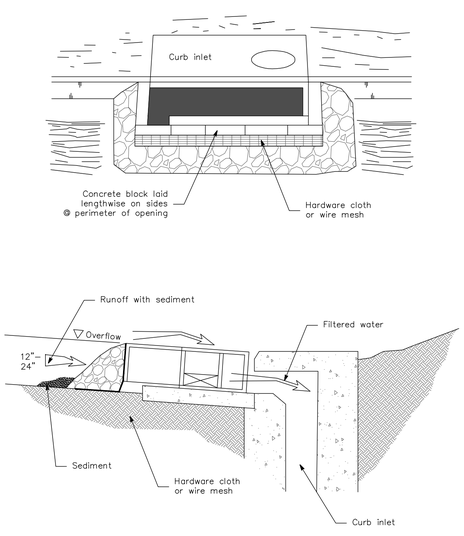

6 Storm Drain Inlet Protection

CASQA Detail SE-10

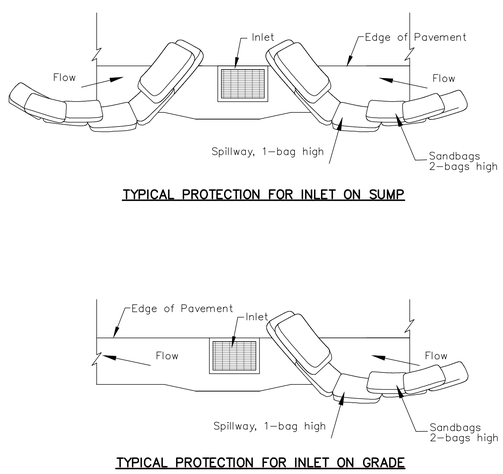

NOTES:
1. Intended for short-term use.
2. Use to inhibit non-storm water flow.
3. Allow for proper maintenance and cleanup.
4. Bags must be removed after adjacent operation is completed
5. Not applicable in areas with high silts and clays without filter fabric.

4 Storm Drain Inlet Protection

CASQA Detail SE-10

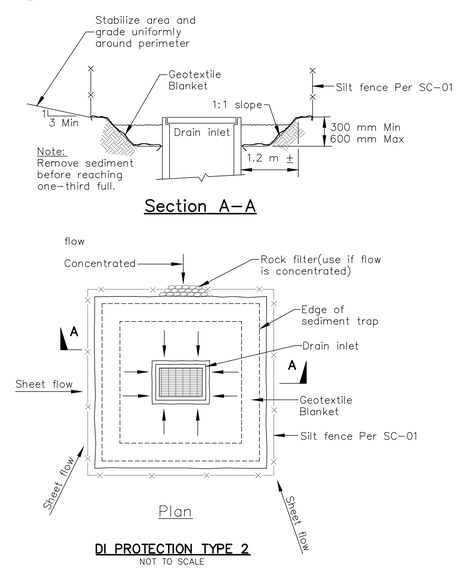

Notes
1. For use in cleared and grubbed and in graded areas.
2. Shape basin so that longest inflow area faces longest length of trap.
3. For concentrated flows, shape basin in 2:1 ratio with length oriented towards direction of flow.

2 Concrete Waste Management

CASQA Detail WM-8

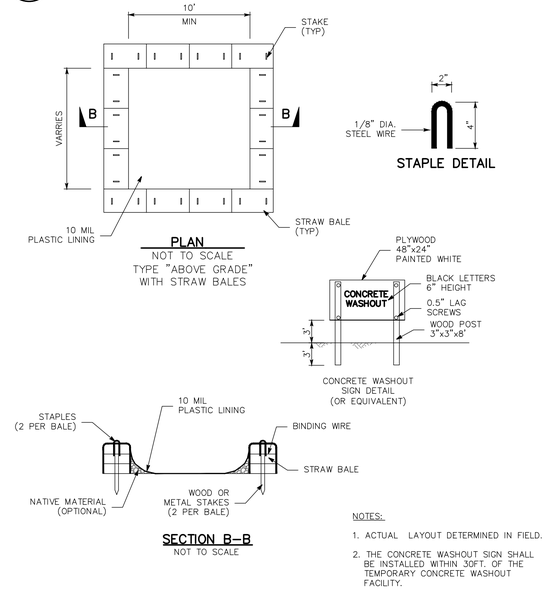

NOTES:
1. ACTUAL LAYOUT DETERMINED IN FIELD.
2. THE CONCRETE WASHOUT SIGN SHALL BE INSTALLED WITHIN 30FT. OF THE TEMPORARY CONCRETE WASHOUT FACILITY.

Source for Graphics: California Stormwater BMP Handbook, California Stormwater Quality Association, January 2003.
Available from www.cabmphandbooks.com.

Best Management Practices and Erosion Control Details Sheet 2
County of Santa Clara

REVISIONS	BY	DATE

REGISTERED PROFESSIONAL ENGINEER N. M. LEE No. 47518 CIVIL STATE OF CALIFORNIA

PRITH BANERJEE
1068 UNIVERSITY AVE, PALO ALTO, CA 94301
Tel: (847) 757 - 8708
EMAIL: PRITHBANERJEE@GMAIL.COM

LE ENGINEERING
598 E Santa Clara Ste270
San Jose, CA 95112
Phone: (408) 806-7187

EROSION CONTROL DETAILS
W SAN MARTIN AVENUE
APN 779-47-004

SAN MARTIN | CALIFORNIA
Project No.: | Designed: HP | Checked: HV | Date: 07/11/24

SHEET
10

FILE #

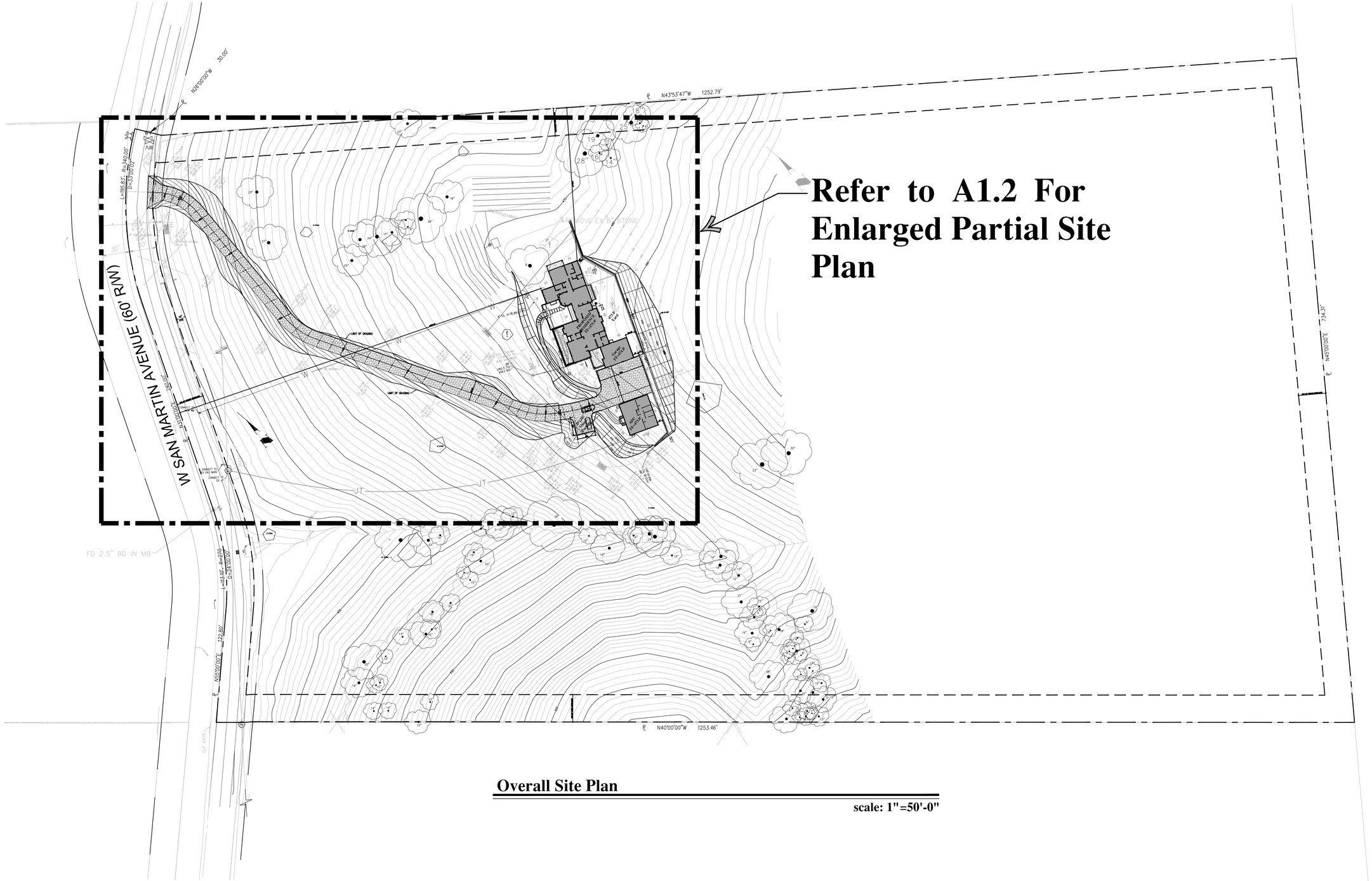

Overall Site Plan

scale: 1"=50'-0"

scale: 1"=50'-0"

0 50' 100' 200'

stotler design group

LOS ALTOS , CALIFORNIA 94022
PHONE: (408) 309-2163
Email: Scott@StotlerDesignGroup.com

WITHOUT PREJUDICE, VISUAL CONTACT WITH THESE PLANS AND SCALED DIMENSIONS AND SHALL BE VERIFIED ON THE JOB SITE. WRITTEN DIMENSIONS SHALL ALWAYS TAKE PREFERENCE OVER ANY DISCREPANCY. SHALL BE BROUGHT TO THE ATTENTION THE ARCHITECT ANY DISCREPANCIES OR OMISSIONS IN THE DRAWINGS, PLANS AND SPECIFICATIONS SHALL BE PARED AND PUBLICATION THEREOF IS EXPRESSLY LIMITED TO SUCH USE. REUSE, REPRODUCTION OR PUBLICATION BY ANY METHOD OR PROCESS, IN PART, IS PROHIBITED. TITLE TO THE PLANS AND SPECIFICATIONS REMAINS WITH THE DESIGNER, RESTRICTED TO THE ORIGINAL SITE FOR WHICH THEY WERE PREPARED AND THE DESIGNER PRIOR TO THE COMMENCEMENT OF ANY WORK.

REVISIONS

Arch Review	12-03-24

DRAWING TITLE: **Overall Site Plan**

JOB TITLE: Private Residence

JOB ADDRESS: Parcel #20 San Martin Ave. San Martin, California 95046

DATE	Feb 14, 2025
SCALE	As Noted
PROJECT MANAGER	S. Stotler
DRAWN	MAW
JOB NO.	2305
SHEET	A1.1

C:\Dropbox\Project\2023\2305-Banerjee\2305-a1.dwg, 1-24x36, 2/14/2025 10:02:47 AM

Enlarged Partial Site Plan

scale: 1"=20'

scale: 1"=20'-0"

0 20' 40' 80'

stotler design group

LOS ALTOS , CALIFORNIA 94022
PHONE: (408) 309-2163
Email: Scott@StotlerDesignGroup.com

WITHOUT PREJUDICE, VISUAL CONTACT WITH THESE PLANS AND SCALED DIMENSIONS AND SHALL BE VERIFIED ON THE JOB SITE. WRITTEN DIMENSIONS SHALL ALWAYS TAKE PREFERENCE OVER ANY DISCREPANCY. SHALL BE BROUGHT TO THE ATTENTION THE DESIGNER IMMEDIATELY. ALL RIGHTS RESERVED. THESE PLANS AND SPECIFICATIONS SHALL BE PARED AND PUBLICATION THEREOF IS EXPRESSLY LIMITED TO SUCH USE. REUSE, REPRODUCTION OR PUBLICATION BY ANY METHOD OR MEANS, IN WHOLE OR IN PART, IS PROHIBITED. TITLE TO THE PLANS AND SPECIFICATIONS REMAINS WITH THE DESIGNER. RESTRICTED TO THE ORIGINAL SITE FOR WHICH THEY WERE PREPARED. TITLE TO THE DESIGNER PRIOR TO THE COMMENCEMENT OF ANY WORK.

REVISIONS	
Arch Review	12-03-24

DRAWING TITLE: **Enlarged Partial Site Plan**

JOB TITLE: Private Residence

JOB ADDRESS: Parcel #20 San Martin Ave. San Martin, California 95046

DATE	Feb 14, 2025
SCALE	As Noted
PROJECT MANAGER	S. Stotler
DRAWN	MAW
JOB NO.	2305
SHEET	A1.2

C:\Dropbox\Projects\2023\2305-Banerjee\2305-a1.dwg, 2-24x36, 2/14/2025 10:02:49 AM

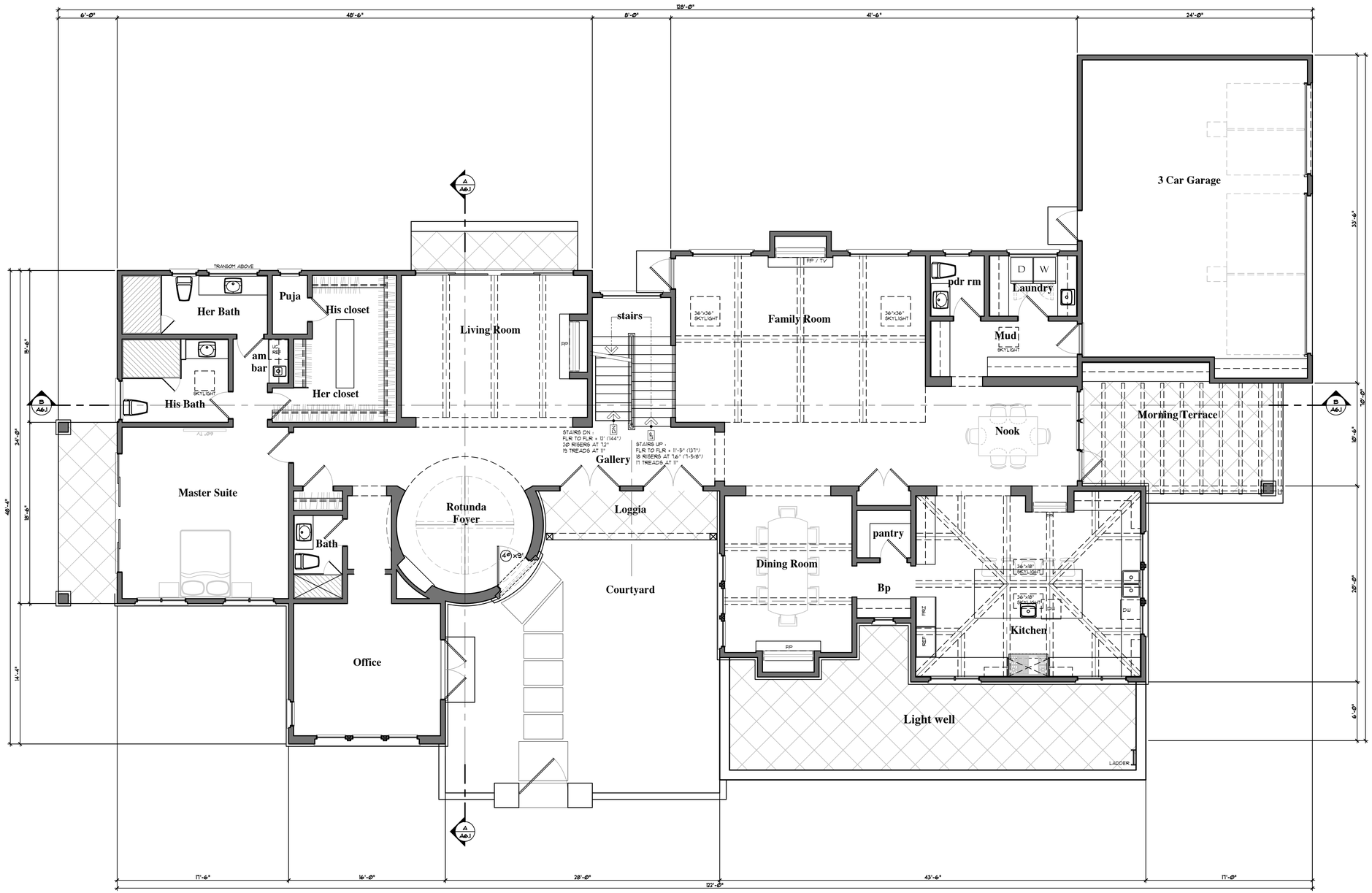

Entry Level Floor Plan

3800 sqft Living Space

scale: 3/16"=1'-0"

scale: 3/16"=1'-0"

0 4' 8' 16' 32'

stotler design group

LOS ALTOS , CALIFORNIA 94022
PHONE: (408) 309-2163
Email: Scott@StotlerDesignGroup.com

WITHOUT PREJUDICE, VISUAL CONTACT WITH THESE PLANS AND SCALED DIMENSIONS AND SHALL BE VERIFIED ON THE JOB SITE. ALL DIMENSIONS SHALL TAKE PREFERENCE OVER ANY WRITTEN DIMENSIONS SHALL TAKE PREFERENCE OVER ANY DISCREPANCY SHALL BE BROUGHT TO THE ATTENTION THE DESIGNER. THESE PLANS AND SPECIFICATIONS AND OTHER PLANS AND SPECIFICATIONS SHALL BE PARED AND PUBLICATION THEREOF IS EXPRESSLY LIMITED TO SUCH USE, REUSE, REPRODUCTION OR PUBLICATION WHETHER THE WHOLE OR IN PART, IS PROHIBITED. TITLE TO THE PLANS AND SPECIFICATIONS REMAINS WITH THE DESIGNER, RESTRICTED TO THE ORIGINAL SITE FOR WHICH THEY WERE PREPARED FOR DESIGNER PRIOR TO THE COMMENCEMENT OF ANY WORK.

REVISIONS

Arch Review	12-03-24

DRAWING TITLE: **Entry Level Floor Plan**

JOB TITLE: Private Residence

JOB ADDRESS: Parcel #20 San Martin Ave. San Martin, California 95046

DATE	Dec 03, 2024
SCALE	As Noted
PROJECT MANAGER	S. Stotler
DRAWN	Maw
JOB NO.	2305
SHEET	A2

C:\Dropbox\Projects\2023\2305-Banerjee\2305-a2.dwg, 12/20/2024 4:19:41 PM

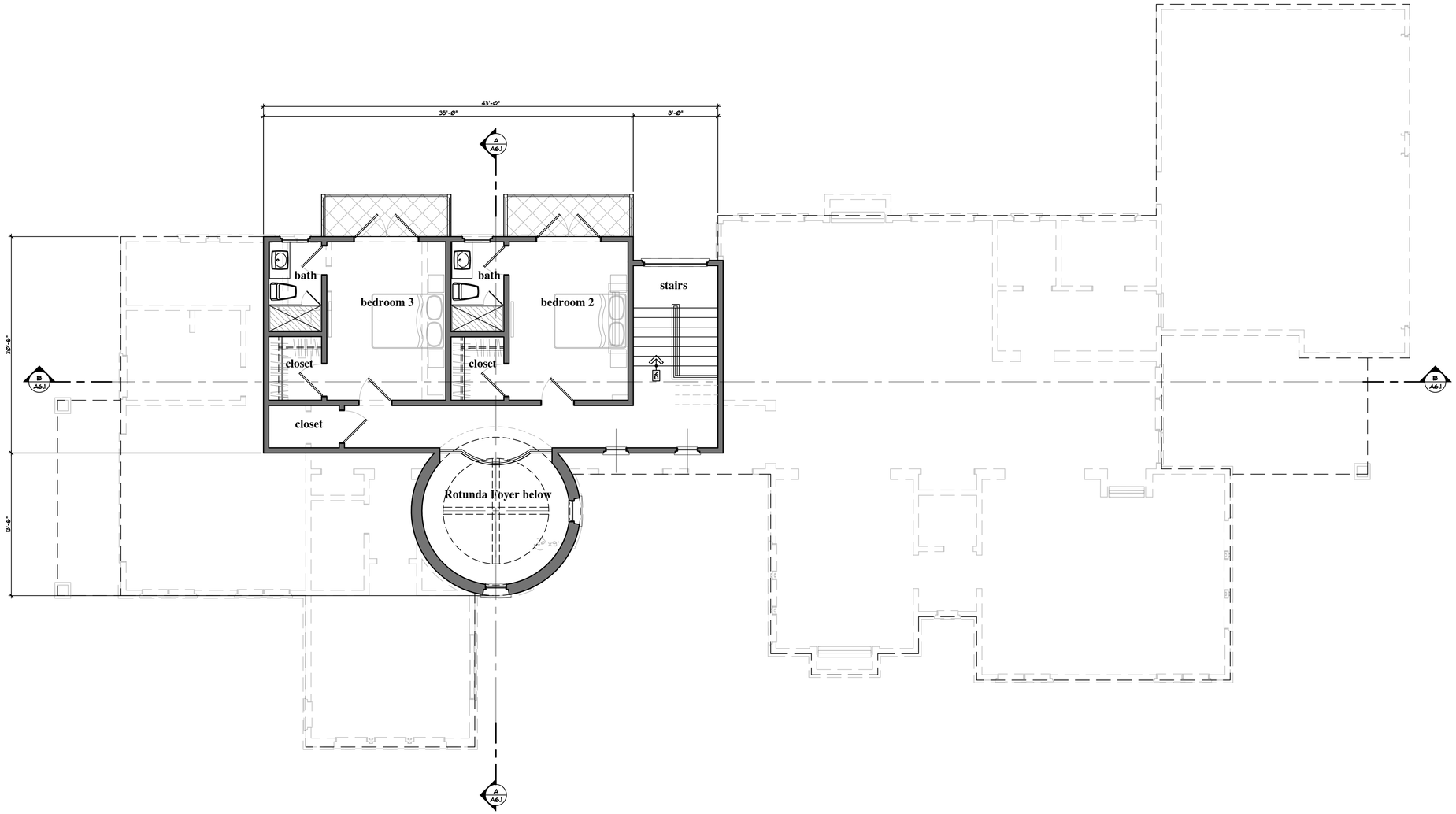

2nd Level Floor Plan

1054 sqft Living Space

scale: 3/16"=1'-0"

scale: 3/16"=1'-0"

0 4' 8' 16' 32'

stotler design group

LOS ALTOS , CALIFORNIA 94022
PHONE: (408) 309-2163
Email: Scott@StotlerDesignGroup.com

WITHOUT PREJUDICE, VISUAL CONTACT WITH THESE PLANS AND SCALED DIMENSIONS AND SHALL BE VERIFIED ON THE JOB SITE. DISCREPANCIES CAUSED BY CONSTRUCTION NOT FOLLOWING WRITTEN DIMENSIONS SHALL TAKE PREFERENCE OVER ANY DISCREPANCY SHALL BE BROUGHT TO THE ATTENTION THE ARCHITECT. THESE RESTRICTIONS TO THE USE OF THESE PLANS AND SPECIFICATIONS SHALL BE PARED AND PUBLICATION THEREOF IS EXPRESSLY LIMITED TO SUCH USE, RE-USE, REPRODUCTION OR PUBLICATION WHICH WOULD VIOLATE, IN PART, IS PROHIBITED. TITLE TO THE PLANS AND SPECIFICATIONS REMAINS WITH THE DESIGNER, RESTRICTED TO THE ORIGINAL SITE FOR WHICH THEY WERE PREPARED FOR THE DESIGNER PRIOR TO THE COMMENCEMENT OF ANY WORK.

REVISIONS

Arch Review	12-03-24

DRAWING TITLE: **2nd Level Floor Plan**

JOB TITLE: Private Residence

JOB ADDRESS: Parcel #20 San Martin Ave. San Martin, California 95046

DATE	Dec 03, 2024
SCALE	As Noted
PROJECT MANAGER	S. Stotler
DRAWN	Maw
JOB NO.	2305
SHEET	A3

C:\Dropbox\Projects\2023\2305-Banerjee\2305-a3.dwg, 12/20/2024 4:19:43 PM

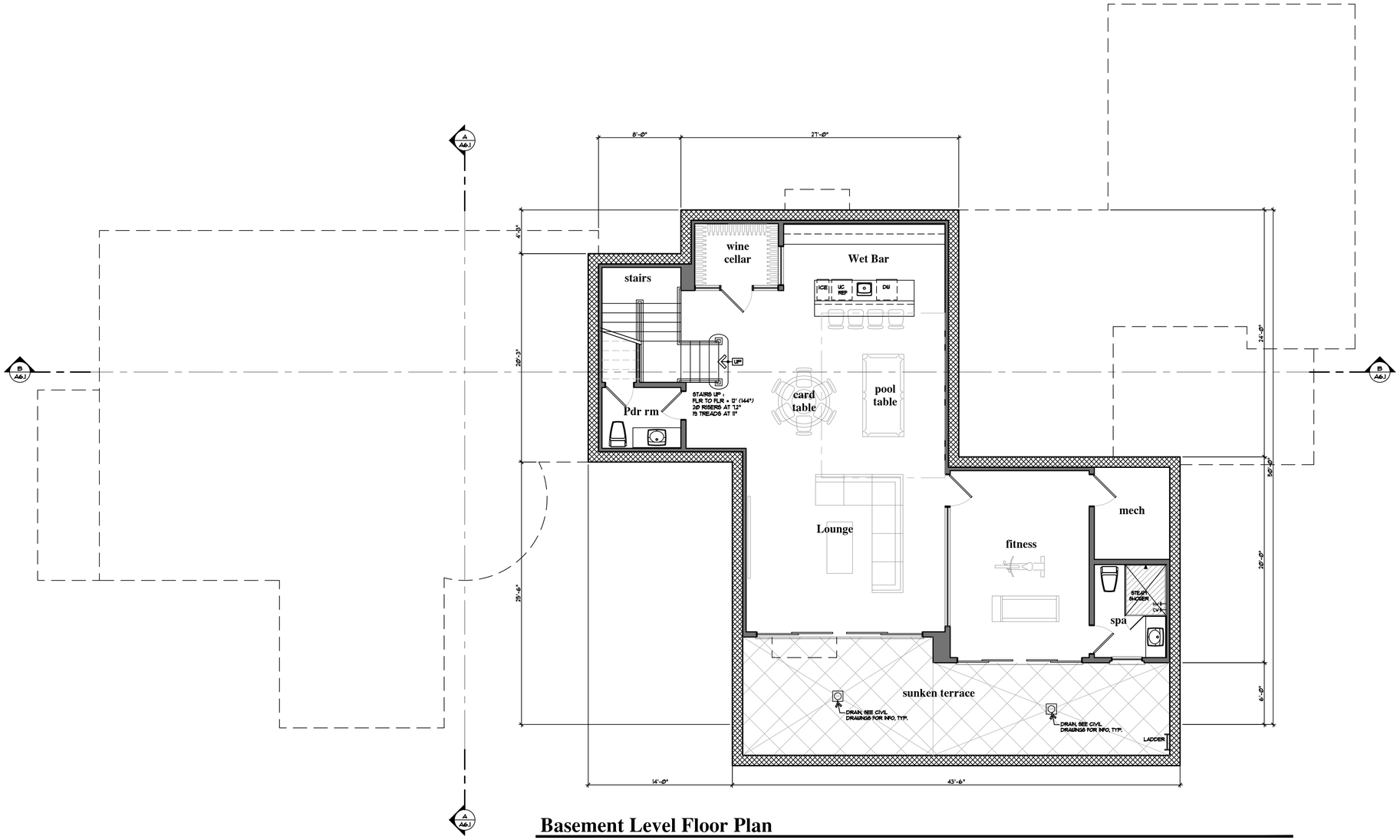

Basement Level Floor Plan

1499 sqft Living Space — **scale: 3/16"=1'-0"**

scale: 3/16"=1'-0"

0 4' 8' 16' 32'

stotler design group

LOS ALTOS , CALIFORNIA 94022
PHONE: (408) 309-2163
Email: Scott@StotlerDesignGroup.com

WITHOUT PREJUDICE, VISUAL CONTACT WITH THESE PLANS AND SCALED DIMENSIONS AND SHALL BE VERIFIED ON THE JOB SITE. DIMENSIONS ON DIAGONAL OR DIMENSIONAL PLANS TAKE PRECEDENCE OVER WRITTEN DIMENSIONS SHALL TAKE PREFERENCE OVER ANY DISCREPANCY SHALL BE BROUGHT TO THE ATTENTION THE ARCHITECT. THESE RESTRICTIONS TO THE USE OF THESE PLANS AND SPECIFICATIONS SHALL BE PARED AND PUBLICATION THEREOF IS EXPRESSLY LIMITED TO SUCH USE. RE-USE, REPRODUCTION OR PUBLICATION BY ANY METHOD OR MEDIUM IN PART, IS PROHIBITED. TITLE TO THE PLANS AND SPECIFICATIONS REMAINS WITH THE DESIGNER. RESTRICTED TO THE ORIGINAL SITE FOR WHICH THEY WERE PREPARED BY THE DESIGNER PRIOR TO THE COMMENCEMENT OF ANY WORK.

REVISIONS

Arch Review	12-03-24

DRAWING TITLE: **Basement Level Floor Plan**

JOB TITLE: Private Residence

JOB ADDRESS: Parcel #20 San Martin Ave. San Martin, California 95046

DATE	Dec 03, 2024
SCALE	As Noted
PROJECT MANAGER	S. Stotler
DRAWN	Maw
JOB NO.	2305
SHEET	A4

C:\Dropbox\Projects\2023\2305-Banerjee\2305-a4.dwg, 12/20/2024 4:19:45 PM

Exterior Elevation - Front

scale: 3/16"=1'-0"

Exterior Elevation - RightSide

scale: 3/16"=1'-0"

scale: 3/16"=1'-0"

0 4' 8' 16' 32'

stotler design group

LOS ALTOS , CALIFORNIA 94022
PHONE: (408) 309-2163
Email: Scott@StotlerDesignGroup.com

WITHOUT PREJUDICE, VISUAL CONTACT WITH THESE PLANS AND SCALED DIMENSIONS AND SHALL BE VERIFIED ON THE JOB SITE. ADDITIONAL CONSTRUCTION DETAILS NOT SHOWN ON PLANS OR WRITTEN DIMENSIONS SHALL TAKE PREFERENCE OVER ANY DISCREPANCY SHALL BE BROUGHT TO THE ATTENTION THE DESIGNER. THE USE AND REPRODUCTION OF THESE PLANS AND SPECIFICATIONS SHALL BE PARED AND PUBLICATION THEREOF IS EXPRESSLY LIMITED TO SUCH USE, RE-USE, REPRODUCTION OR PUBLICATION WHICH WOULD INFRINGE IN PART, IS PROHIBITED. TITLE TO THE PLANS AND SPECIFICATIONS REMAINS WITH THE DESIGNER, RESTRICTED TO THE ORIGINAL SITE FOR WHICH THEY WERE PREPARED, UNLESS DESIGNER PRIOR TO THE COMMENCEMENT OF ANY WORK.

REVISIONS

Arch Review	12-03-24

DRAWING TITLE: **Exterior Elevations**

JOB TITLE: Private Residence

JOB ADDRESS: Parcel #20 San Martin Ave. San Martin, California 95046

DATE	Dec 03, 2024
SCALE	As Noted
PROJECT MANAGER	S. Stotler
DRAWN	Maw
JOB NO.	2305
SHEET	A5.1

C:\Dropbox\Projects\2023\2305-Banerjee\2305-a5.dwg, 12/20/2024 4:19:47 PM

Exterior Elevation - Rear

scale: 3/16"=1'-0"

Exterior Elevation - Leftside

scale: 3/16"=1'-0"

scale: 3/16"=1'-0"

0 4' 8' 16' 32'

stotler design group

LOS ALTOS , CALIFORNIA 94022
PHONE: (408) 309-2163
Email: Scott@StotlerDesignGroup.com

WITHOUT PREJUDICE, VISUAL CONTACT WITH THESE PLANS AND SCALED DIMENSIONS AND SHALL BE VERIFIED ON THE JOB SITE. ADDITIONALLY, DIMENSIONS SHALL TAKE PREFERENCE OVER ANY DISCREPANCY SHALL BE BROUGHT TO THE ATTENTION THE ARCHITECT. THESE PLANS AND SPECIFICATIONS AND COPIES THEREOF IS EXPRESSLY LIMITED TO SUCH USE; REUSE, REPRODUCTION OR PUBLICATION BY ANY PERSON OTHER THAN IN PART, IS PROHIBITED. TITLE TO THE PLANS AND SPECIFICATIONS REMAINS WITH THE DESIGNER, RESTRICTED TO THE USE OF THE PROPERTY FOR WHICH THE WORK WAS PREPARED BY THE DESIGNER PRIOR TO THE COMMENCEMENT OF ANY WORK.

REVISIONS

Arch Review	12-03-24

DRAWING TITLE: **Exterior Elevations**

JOB TITLE: Private Residence

JOB ADDRESS: Parcel #20 San Martin Ave. San Martin, California 95046

DATE	Dec 03, 2024
SCALE	As Noted
PROJECT MANAGER	S. Stotler
DRAWN	Maw
JOB NO.	2305
SHEET	A5.2

C:\Dropbox\Projects\2023\2305-Banerjee\2305-a5.dwg, 12/20/2024 4:19:49 PM

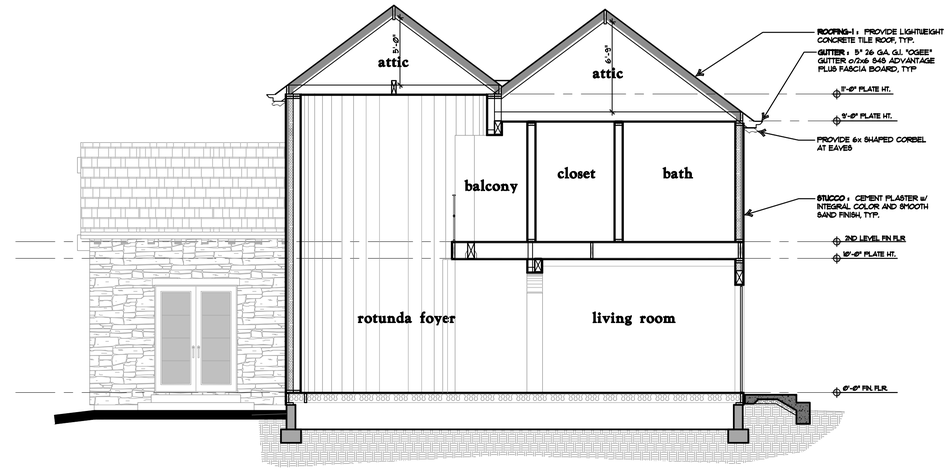

Cross Section - A

scale: 3/16"=1'-0"

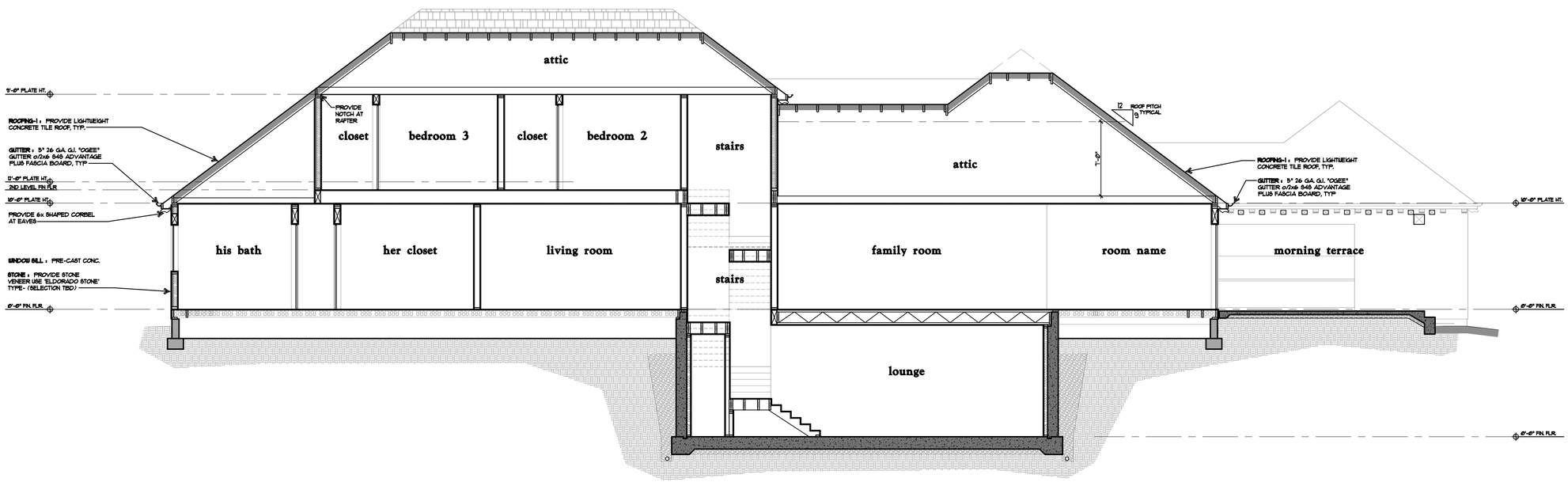

Cross Section - B

scale: 3/16"=1'-0"

scale: 3/16"=1'-0"

0 4' 8' 16' 32'

stotler design group
LOS ALTOS , CALIFORNIA 94022
PHONE: (408) 309-2163
Email: Scott@StotlerDesignGroup.com

WITHOUT PREJUDICE, VISUAL CONTACT WITH THESE PLANS AND SCALED DIMENSIONS AND SHALL BE VERIFIED ON THE JOB SITE. SPECIFICATIONS AND CONSTRUCTIONS SHALL CONFORM TO WRITTEN DIMENSIONS SHALL TAKE PREFERENCE OVER ANY DISCREPANCY SHALL BE BROUGHT TO THE ATTENTION THE ARCHITECT. ACCEPTANCE OF THESE RESTRICTIONS TO USE OF THESE PLANS AND SPECIFICATIONS SHALL BE PARED AND PUBLICATION THEREOF IS EXPRESSLY LIMITED TO SUCH USE. RE-USE, REPRODUCTION OR PUBLICATION BY ANY METHOD OR MEANS, IN PART, IS PROHIBITED. TITLE TO THE PLANS AND SPECIFICATIONS REMAINS WITH THE DESIGNER, RESTRICTED TO THE ORIGINAL SITE FOR WHICH THEY WERE PREPARED AND THE DESIGNER PRIOR TO THE COMMENCEMENT OF ANY WORK.

REVISIONS

Arch Review	12-03-24

DRAWING TITLE: **Cross Sections**

JOB TITLE: Private Residence

JOB ADDRESS: Parcel #20 San Martin Ave. San Martin, California 95046

DATE	Dec 03, 2024
SCALE	As Noted
PROJECT MANAGER	S. Stotler
DRAWN	Maw
JOB NO.	2305
SHEET	A6

C:\Dropbox\Projects\2023\2305-Banerjee\2305-a6.dwg, 12/20/2024 4:19:53 PM

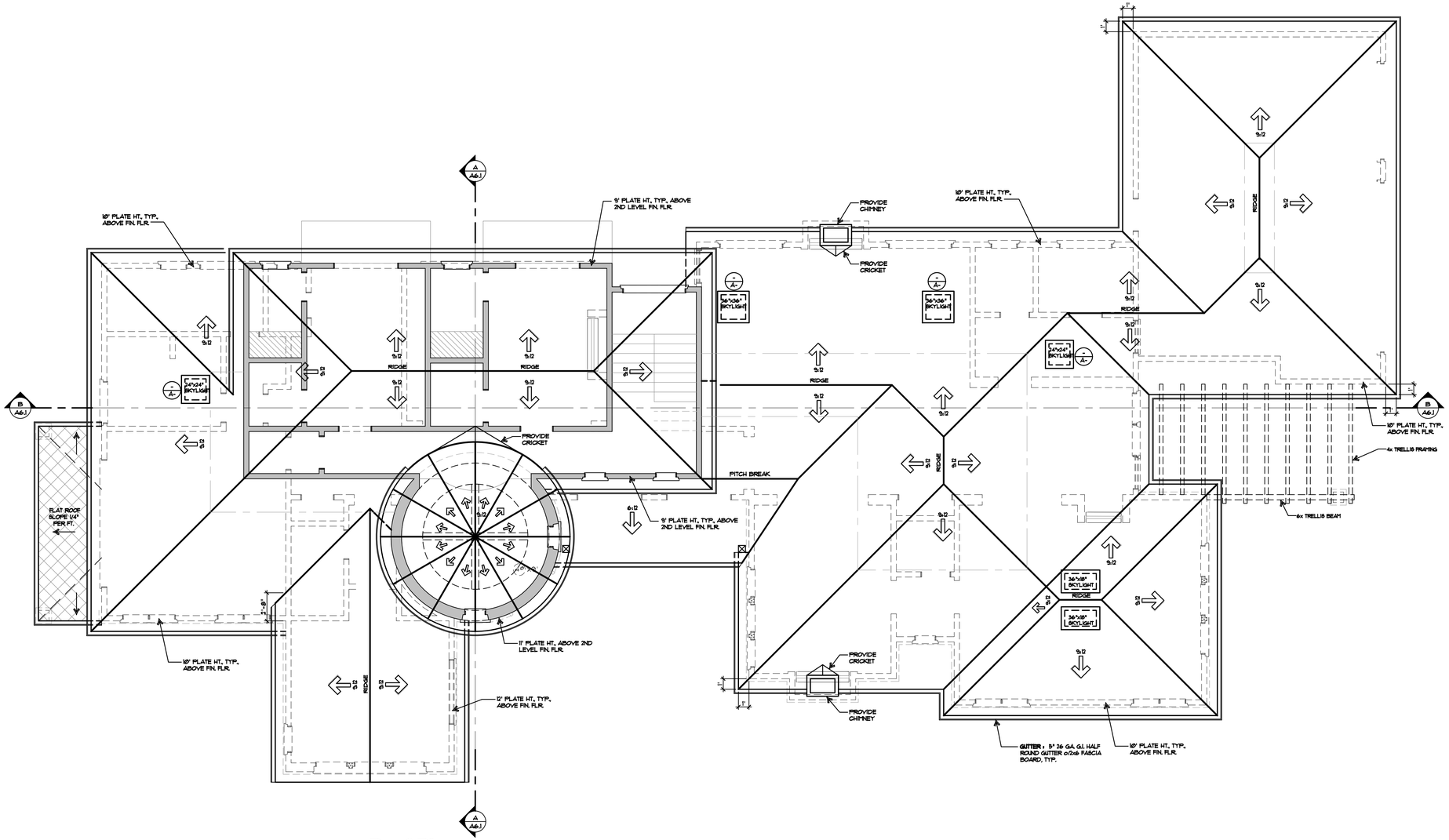

Roof Plan

scale: 3/16"=1'-0"

GENERAL ROOF PLAN NOTES:

THIS PROJECT IS LOCATED WITHIN THE DESIGNATED "WUI" ZONE (WILDLAND-URBAN INTERFACE) FIRE ZONE. THE BUILDING CONSTRUCTION SHALL COMPLY WITH THE PROVISIONS OF CRC R327 (CALIFORNIA RESIDENTIAL CODE) & CBC CHAPTER 7A CALIFORNIA BUILDING CODE , REFER TO "WILDLAND-URBAN INTERFACE NOTES" ON SHEET T1.

1ST LEVEL PLATE HEIGHT TO BE 10'-1", U.N.O.
2ND LEVEL PLATE HEIGHT TO BE 9'-1", U.N.O.

ROOF SLOPE SHALL BE 3:12, U.N.O.

OVERHANGS ARE TO BE 12" AT EAVES & 12" AT RAKES, U.N.O.

ARROWS INDICATE DIRECTION OF ROOF SLOPE.

ROOFING-1 : LIGHTWEIGHT CONCRETE TILE ROOF, CLASS "A" MFG'D BY REDLAND OR EQUAL, ASTM C1167, ASTM E108, INSTALL PER MFG'S SPEC'S, OVER CLASS "A" UNDERLAYMENT : #30 FELT OR (2)-LAYER #15 FELT o/ 1/2" PLYWOOD SHEATHING w/8d @ 6" O.C.E. & 12"O.C.F., REFER TO STRUCTURAL DRAWINGS FOR PLYWD AND NAILING SPECS.

GUTTER : 5" 26 GA. G.I. OGEE GUTTER o/2x6 S4S ADVANTAGE PLUS FASCIA BOARD, TYPICAL. PROVIDE SCREEN TO PROTECT FROM LEAF ACCUMULATION. CRC R377.5.4 (W.U.I. REQUIREMENT)

scale: 3/16"=1'-0"

0 4' 8' 16' 32'

stotler design group
LOS ALTOS , CALIFORNIA 94022
PHONE: (408) 309-2163
Email: Scott@StotlerDesignGroup.com

WITHOUT PREJUDICE, VISUAL CONTACT WITH THESE PLANS AND SCALED DIMENSIONS AND SHALL BE VERIFIED ON THE JOB SITE. ALL DIMENSIONS TO BE FIELD VERIFIED. FIGURED DIMENSIONS OR WRITTEN DIMENSIONS SHALL TAKE PREFERENCE OVER ANY DISCREPANCY SHALL BE BROUGHT TO THE ATTENTION THE DESIGNER. ALL DRAWINGS, SPECIFICATIONS, THE USE OF THESE PLANS AND SPECIFICATIONS SHALL BE PARED AND PUBLICATION THEREOF IS EXPRESSLY LIMITED TO SUCH USE, RE-USE, REPRODUCTION OR PUBLICATION WITHOUT WRITTEN CONSENT IN PART, IS PROHIBITED. TITLE TO THE PLANS AND SPECIFICATIONS REMAINS WITH THE DESIGNER, RESTRICTED TO THE ORIGINAL SITE FOR WHICH THEY WERE PREPARED AND THE DESIGNER PRIOR TO THE COMMENCEMENT OF ANY WORK.

REVISIONS

Arch Review	12-03-24

DRAWING TITLE: **Roof Plan**

JOB TITLE: Private Residence

JOB ADDRESS: Parcel #20 San Martin Ave. San Martin, California 95046

DATE	Dec 03, 2024
SCALE	As Noted
PROJECT MANAGER	S. Stotler
DRAWN	Maw
JOB NO.	2305
SHEET	A7

C:\Dropbox\Projects\2023\2305-Barnetjpeg\2305-a7.dwg, 12/20/2024 4:19:56 PM

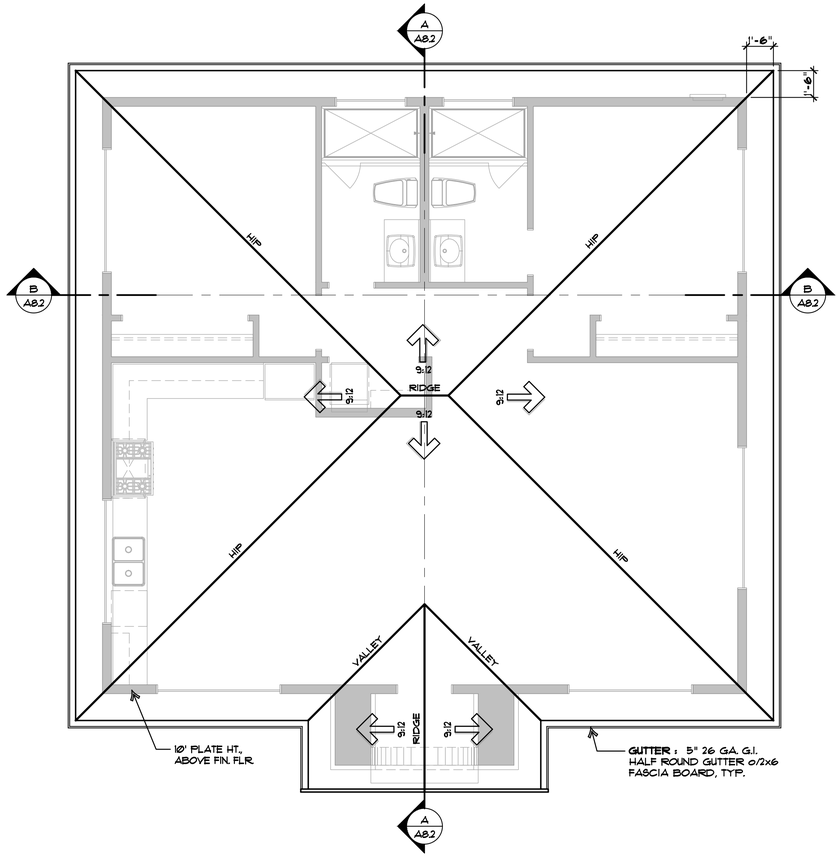

Roof Plan

scale: 1/4"=1'-0"

GENERAL ROOF PLAN NOTES:

THIS PROJECT IS LOCATED WITHIN THE DESIGNATED "WUI" ZONE (WILDLAND-URBAN INTERFACE) FIRE ZONE. THE BUILDING CONSTRUCTION SHALL COMPLY WITH THE PROVISIONS OF CRC R327 (CALIFORNIA RESIDENTIAL CODE) & CBC CHAPTER 7A CALIFORNIA BUILDING CODE , REFER TO "WILDLAND-URBAN INTERFACE NOTES" ON SHEET T1.

1ST LEVEL PLATE HEIGHT TO BE 10'-1", U.N.O.
2ND LEVEL PLATE HEIGHT TO BE 9'-1", U.N.O.

ROOF SLOPE SHALL BE 9:12, U.N.O.

OVERHANGS ARE TO BE 12" AT EAVES & 12" AT RAKES, U.N.O.

ARROWS INDICATE DIRECTION OF ROOF SLOPE.

ROOFING-1 : LIGHTWEIGHT CONCRETE TILE ROOF, CLASS "A" MFG'D BY REDLAND OR EQUAL, ASTM C1167, ASTM E108, INSTALL PER MFG'S SPEC'S, OVER CLASS "A" UNDERLAYMENT : #30 FELT OR (2)-LAYER #15 FELT o/ 1/2" PLYWOOD SHEATHING w/8d @ 6" O.C.E. & 12"O.C.F., REFER TO STRUCTURAL DRAWINGS FOR PLYWD AND NAILING SPECS.

GUTTER : 5" 26 GA. G.I. OGEE GUTTER o/2x6 S4S ADVANTAGE PLUS FASCIA BOARD, TYPICAL. PROVIDE SCREEN TO PROTECT FROM LEAF ACCUMULATION. CRC R3113.4 (WUI. REQUIREMENT)

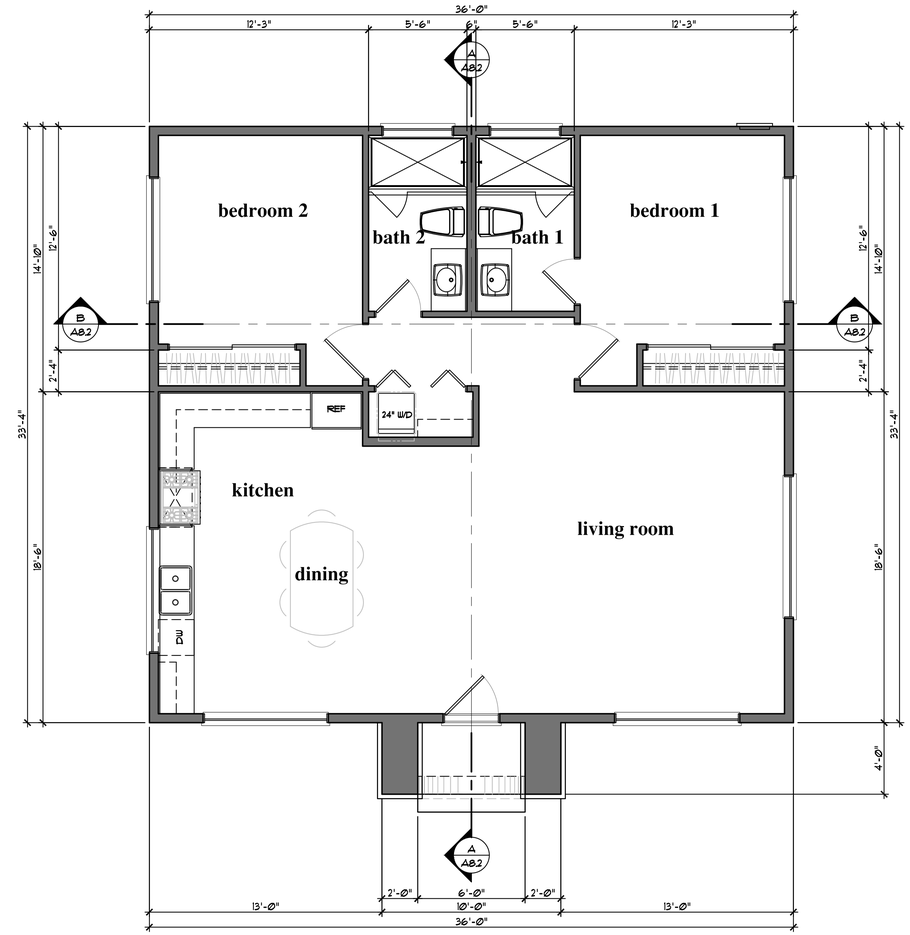

Floor Plan

1200 sqft living space

scale: 1/4"=1'-0"

scale: 1/4"=1'-0"

0 2' 4' 8' 16'

stotler design group
LOS ALTOS , CALIFORNIA 94022
PHONE: (408) 309-2163
Email: Scott@StotlerDesignGroup.com

WITHOUT PREJUDICE, VISUAL CONTACT WITH THESE PLANS AND SCALED DIMENSIONS AND SHALL BE VERIFIED ON THE JOB SITE. DIMENSIONS AND CONDITIONS ON THE JOB SHALL TAKE PREFERENCE OVER WRITTEN DIMENSIONS SHALL TAKE PREFERENCE OVER ANY DISCREPANCY SHALL BE BROUGHT TO THE ATTENTION THE ARCHITECT. THESE PLANS AND SPECIFICATIONS AND THESE PLANS AND SPECIFICATIONS SHALL BE PARED AND PUBLICATION THEREOF IS EXPRESSLY LIMITED TO SUCH USE. RE-USE, REPRODUCTION OR PUBLICATION BY ANY METHOD OR MEDIUM IN PART, IS PROHIBITED. TITLE TO THE PLANS AND SPECIFICATIONS REMAINS WITH THE DESIGNER. RESTRICTED TO THE ORIGINAL SITE FOR WHICH THEY WERE PREPARED BY THE DESIGNER PRIOR TO THE COMMENCEMENT OF ANY WORK.

REVISIONS

Arch Review	12-03-24

DRAWING TITLE: ADU - Floor Plan & Roof Plan

JOB TITLE: Private Residence

JOB ADDRESS: Parcel #20 San Martin Ave. San Martin, California 95046

DATE: Dec 03, 2024
SCALE: As Noted
PROJECT MANAGER: S. Stotler
DRAWN: Maw
JOB NO.: 2305
SHEET: A8.1

C:\Dropbox\Projects\2023\2305-Banerjee\2305-a8.dwg, 12/20/2024 4:19:58 PM

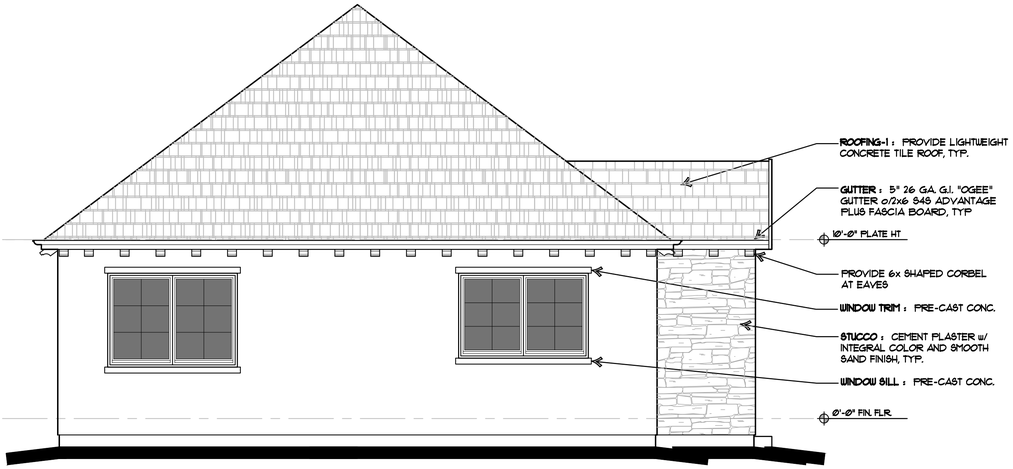

Exterior Elevation - Left Side

scale: 1/4"=1'-0"

Exterior Elevation - Front

scale: 1/4"=1'-0"

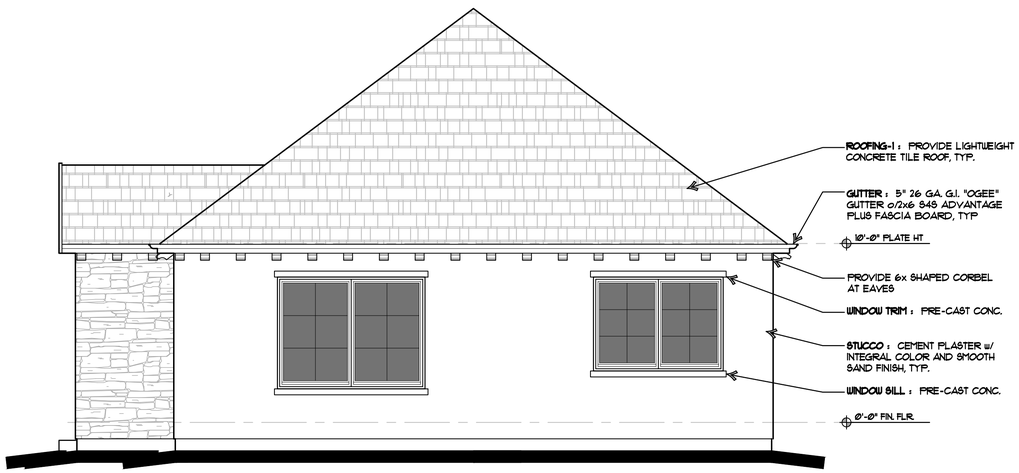

Exterior Elevation - Right Side

scale: 1/4"=1'-0"

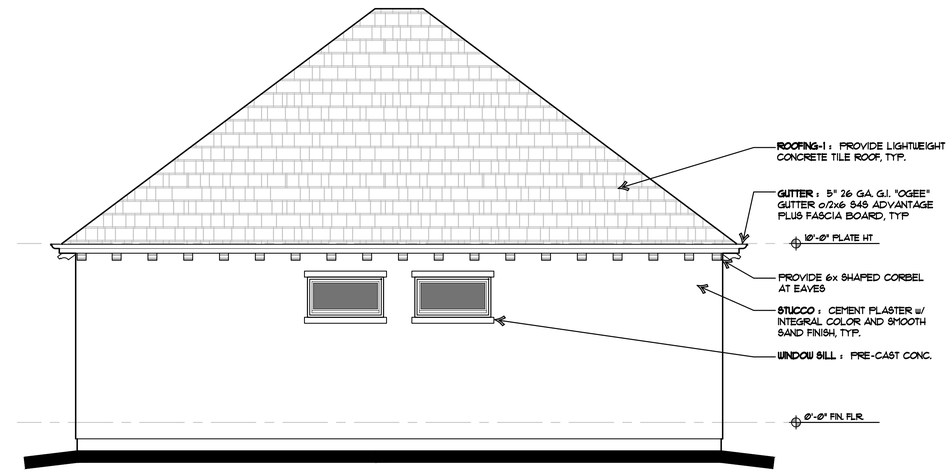

Exterior Elevation - Rear

scale: 1/4"=1'-0"

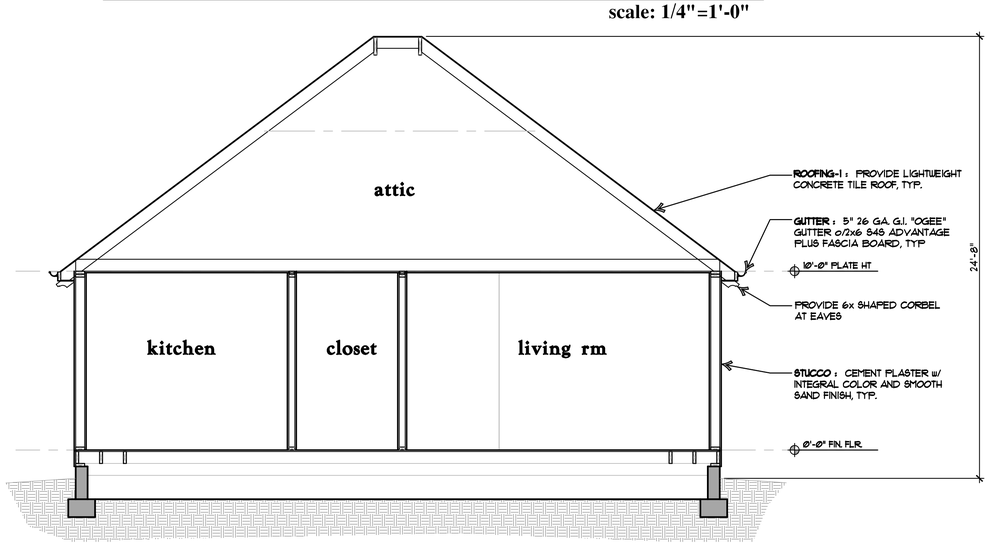

Exterior Elevation - Right Side

scale: 1/4"=1'-0"

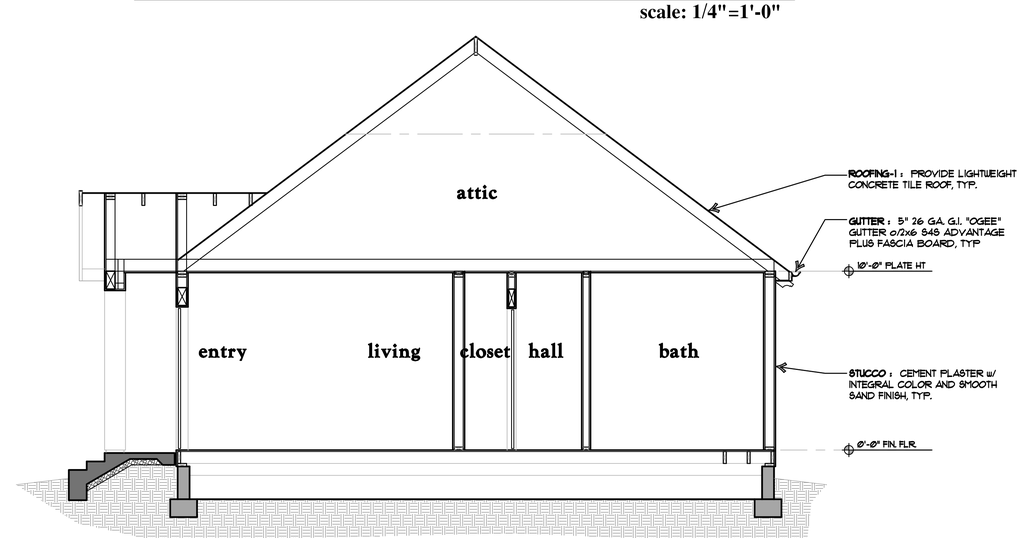

Exterior Elevation - Rear

scale: 1/4"=1'-0"

scale: 1/4"=1'-0"

0 2' 4' 8' 16'

stotler design group
LOS ALTOS , CALIFORNIA 94022
PHONE: (408) 309-2163
Email: Scott@StotlerDesignGroup.com

WITHOUT PREJUDICE, VISUAL CONTACT WITH THESE PLANS AND SCALED DIMENSIONS AND SHALL BE VERIFIED ON THE JOB SITE BEFORE THE ISSUANCE OF CONTRACT. FIGURED DIMENSIONS OR WRITTEN DIMENSIONS SHALL TAKE PREFERENCE OVER ANY DISCREPANCY SHALL BE BROUGHT TO THE ATTENTION THE ARCHITECT. THESE RESTRICTIONS ARE ASSERTED TO THESE PLANS AND SPECIFICATIONS SHALL BE PARED AND PUBLICATION THEREOF IS EXPRESSLY LIMITED TO SUCH USE. RE-USE, REPRODUCTION OR PUBLICATION BY ANY METHOD OR MEANS IN PART, IS PROHIBITED. TITLE TO THE PLANS AND SPECIFICATIONS REMAINS WITH THE DESIGNER. RESTRICTED TO THE ORIGINAL SITE FOR WHICH THEY WERE PREPARED, AND TO BE RETURNED UPON REQUEST OF THE DESIGNER PRIOR TO THE COMMENCEMENT OF ANY WORK.

REVISIONS

Arch Review	12-03-24

DRAWING TITLE: ADU - Exterior Elevations

JOB TITLE: Private Residence

JOB ADDRESS: Parcel #20 San Martin Ave. San Martin, California 95046

DATE	Dec 03, 2024
SCALE	As Noted
PROJECT MANAGER	S. Stotler
DRAWN	Maw
JOB NO.	2305
SHEET	A8.2

C:\Dropbox\Projects\2023\2305-Banerjee\2305-a8.dwg, 12/20/2024 4:19:59 PM